FASHION DESIGN TECHNOLOGY

TRADE THEORY

NSQF LEVEL - 5

HANDBOOK FOR CRAFTS INSTRUCTOR TRAINING SCHEME

© NIMI
NOT TO BE REPUBLISHED

Directorate General of Training

DIRECTORATE GENERAL OF TRAINING
MINISTRY OF SKILL DEVELOPMENT & ENTREPRENEURSHIP
GOVERNMENT OF INDIA

NATIONAL INSTRUCTIONAL MEDIA INSTITUTE, CHENNAI

Post Box No. 3142, CTI Campus, Guindy, Chennai - 600 032

Published by

National Instructional Media Institute
Post.Box.No. 3142,
Guindy, Chennai - 600032
Email : chennai-nimi@nic.in
Website: www.nimi.gov.in

All Rights Reserved

First Edition, 2024

Printed in India at

National Instructional Media Institute
Post. Box. No. 3142,
Guindy,
Chennai - 600032

Copyright©2024 NIMI

Disclaimer

The information contained herein has been obtained from sources reliable to Directorate General of Training, New Delhi. NIMI disclaims all warranties to the accuracy, completeness or adequacy of such information. NIMI shall have no liability for errors, omissions, or inadequacies in the information contained herein, or for interpretations thereof. Every effort has been made to trace the owners of the copyright material included in the book. The publishers would be greatfull for any omissions brought to their notice for acknowledgements in future editions of the book. No entity in NIMI shall be responsible for any loss whatsoever, sustained by any person who relies on this material. The material in this publication is copyrighted. No parts of this publication may be reproduced, stored or distributed in any form or by any means either on paper or electronic media, unless authorized by NIMI.

© NIMI NOT TO BE REPUBLISHED

A Comprehensive Training Program
under Crafts Instructor Training Scheme (CITS)
for Instructors

HANDBOOK ON TECHNICAL INSTRUCTOR TRAINING MODULES

NOT TO BE REPUBLISHED

© NIMI
NOT TO BE REPUBLISHED

अतुल कुमार तिवारी, I.A.S.
सचिव

ATUL KUMAR TIWARI, I.A.S.
Secretary

सत्यमेव जयते

भारत सरकार
कौशल विकास एवं उद्यमिता मंत्रालय
GOVERNMENT OF INDIA
MINISTRY OF SKILL DEVELOPMENT
AND ENTREPRENEURSHIP

Foreword

In today's rapidly evolving world, the role of skilled craftsmen and women is more crucial than ever. The Craft Instructor Training Scheme (CITS) stands at the forefront of this transformation, shaping the educators who will train the next generation of artisans and technicians. This book aims to provide an in-depth understanding of the subject, exploring its significance, methodologies, and impact on vocational training.

The Craft Instructor Training Scheme was established with the objective of enhancing the quality of instruction in industrial training institutes and other vocational training institutions. By equipping instructors with advanced skills and knowledge, the scheme ensures that they are well-prepared to impart high-quality training to their students. This, in turn, contributes to the creation of a highly skilled workforce capable of meeting the demands of modern industry.

The initial chapters provide the importance of specialized instructor training. Following this, detailed chapters delve into the curriculum covering advanced techniques, safety protocols, and instructional strategies. Each section is designed to offer both theoretical insights and practical applications, ensuring a well-rounded understanding of the subject.

The book offers recommendations for overcoming obstacles and enhancing the effectiveness of the program, with the ultimate goal of producing highly skilled instructors capable of shaping the future workforce.

This book is intended for a diverse audience, including current and aspiring instructors, vocational training administrators, policymakers, and industry stakeholders. It serves as a valuable resource for understanding the intricacies of the subject and its pivotal role in vocational education.

I extend my heartfelt gratitude to all contributors who have shared their experiences and expertise, enriching this book with their valuable insights. Special thanks to the contribution of the development team, reviewers and NIMI that have supported this endeavor, providing essential data and resources.

It is my sincere hope that this book will inspire and guide readers in their efforts to enhance vocational training, ultimately contributing to the development of a skilled and competent workforce.

ATUL KUMAR TIWARI, I.A.S.
Secretary, MSDE

NOT TO BE REPUBLISHED © NIMI

त्रिशलजीत सेठी
महानिदेशक
Trishaljit Sethi, IPoS
Director General

सत्यमेव जयते

भारत सरकार
कौशल विकास एवं उद्यमशीलता मंत्रालय
प्रशिक्षण महानिदेशालय
GOVERNMENT OF INDIA
MINISTRY OF SKILL DEVELOPMENT & ENTREPRENEURSHIP
DIRECTORATE GENERAL OF TRAINING

FOREWORD

The Craftsmen Training Scheme (CTS) implemented by the Directorate General of Training (DGT) provides skill training to the youth and ensures a steady flow of skilled manpower for the industry. It aims to raise quantitatively and qualitatively the industrial production by systematic training, and to reduce unemployment among the youth by providing them with employable skills.

The Craft Instructor Training Scheme (CITS) is an indispensable part of the Craftsmen Training Scheme (CTS). It offers comprehensive training both in 'skills' and in 'training methodology' to the instructor trainees to make them conversant with techniques of transferring hands-on skills.

I congratulate NIMI for taking the initiative of preparation of the course content for CITS. This will help institutionalize the mechanism for imparting training to the trainers all across the ecosystem. I also extend my gratitude to the Instructors and Officials of National Skill Training Institutes (NSTIs) and the DGT for their invaluable contribution in preparation of the CITS course content.

As we navigate the complexities of a rapidly changing world and the technological disruptions, the significance of CTS and CITS has increased manifold. It not only empowers individuals with practical skills but also lays the foundation for a prosperous future. I am confident that this book will serve as a guiding light to all instructor trainees for skill development and nation-building.

Trishaljit

(Trishaljit Sethi)

© NIMI NOT TO BE REPUBLISHED

PREFACE

The Craft Instructor Training Scheme is an indispensable module of the Craftsmen Training Scheme, which has been an integral part of the Indian skill development industry since its inception. This program aims to equip instructors with the necessary skills and teaching methodology to effectively transfer hands-on skills to trainees and promote a holistic learning experience. The first Craft Instructor Training Institute was established in 1948, followed by six more institutes across India in 1960. Today, these institutes, including the National Skill Training Institute (formerly Central Training Institute for Instructors), offer the CITS course, which is mandated by the Directorate General of Training (DGT).

The Craft Instructor training program is designed to develop skilled manpower for industries. The course aims to offer instructors an opportunity to improve their instructional skills, engage learners effectively, offer impactful mentoring, and make efficient use of resources, leading to a more skilled workforce in various industries. The program emphasizes collaborative and innovative approaches to teaching, resulting in high-quality course delivery. Overall, the Craft Instructor Training Scheme is a pivotal program that helps instructors grow in their careers and make a significant contribution to society. This program is essential for developing skilled manpower and promoting a robust learning environment that benefits both trainees and instructors alike.

© NIMI NOT TO BE REPUBLISHED

ACKNOWLEDGEMENT

National Instructional Media Institute (NIMI) sincerely acknowledges with thanks for the co-operation and contribution extended by the following experts to bring out this Instructional material **(Trade Theory)** for **CITS Fashion Design & Technology (NSQF Level - 5)** under the **Apparel** Sector for **Instructors**.

MEDIA DEVELOPMENT COMMITTEE MEMBERS

Shri. Ramesh Babu	-	Assistant Director, NSTI, Calicut.
Shri. Alok Daulta	-	Training Officer, NSTI (W), Mohali.

COORDINATORS

Shri. G.C. Ramamurthy	-	Joint Director, CD - Section, DGT.
Shri. T.V. Rajasekar	-	Joint Director, NIMI, Chennai.
Shri. Shiv Kumar	-	Training Officer, CD - Section, DGT.

NIMI records its appreciation of the Data Entry, CAD, DTP Operators for their excellent and devoted services in the process of development of this Instructional Material.

NIMI also acknowledges with thanks, the invaluable efforts rendered by all other staff who have contributed for the development of this Instructional Material.

NIMI is grateful to all others who have directly or indirectly helped in developing this IMP.

NOT TO BE REPUBLISHED © NIMI

ABOUT THE TEXT BOOK

The Vocational Instructor Training Program is a comprehensive initiative designed to equip aspiring students with the necessary skills and knowledge to effectively teach in vocational education settings. This program encompasses a range of pedagogical strategies, instructional techniques, and subject-specific content tailored to the diverse vocational fields. Participants engage in coursework that covers curriculum development, assessment methods, classroom management, and the integration of industry-relevant technologies. Practical experience and hands-on training are emphasized, allowing participants to apply theoretical concepts in real-world teaching environments. Through collaborative learning experiences and mentorship opportunities, aspiring vocational instructors develop the confidence and competence to facilitate engaging and impactful learning experiences for their students. This training program aims to cultivate a new generation of educators who are not only proficient in their respective vocational fields but also adept at fostering the success and employability of their students in today's competitive workforce.

This text book covers communication, self-management, information and communication technology, entrepreneurial and green skills. It has been developed as per the learning outcome-based curriculum.

© NIMI NOT TO BE REPUBLISHED

G C Rama Murthy,
Joint Director,
Curriculum Development, DGT,
MSDE, New Delhi.

CONTENT

Lesson No.	Table of Contents	Page No.
	Module 1: Pattern Making & CAD	
01	Introduction of fashion	1
02	Introduction of Darts and dart manipulation	23
03	Introduction of CAD software like fashion studio	53
	Module 2: Surface Embellishment Technique	
04	Tie and Dye	65
	Module 3: Fashion Illustration	
05 - 08	Introduction to fashion studies	81
09 - 11	Basic knowledge of various garment details	92
12	Introduction of portfolio	108
	Module 4: Garment Construction	
13 - 24	Draping terminology	113
	Module 5: Garment Mass Production	
25	Classifi cation of cutting machine	184
	Module 6: Fashion Styling	
26	Introduction to fashion styling	203
	Module 7: Merchandising	
27-33	Introduction to the working of export house and buying house	206
	Module 8: Quality Control	
34 - 39	Quality of production	223
	Module 9: Digital Portfolio	
40	Introduction to digital portfolio	231

NOT TO BE REPUBLISHED © NIMI

Module 1 : Pattern Making & CAD

LESSON 1 : Introduction of fashion

Objectives

At the end of this lesson, you shall be able to

- introduction of fashion
- definition of fashion
- classification of fashion.

Introduction of fashion

Fashion is a term used interchangeably to describe the creation of clothing, footwear, accessories, cosmetics, and jewelers of different cultural aesthetics and their mix and match into outfits that depict distinctive ways of dressing namely styles & trends as signifiers of social status, self-expression, and group belonging. As a multifaceted term, fashion describes an industry, styles, aesthetics, and trends. (Fig 1)

Fig 1

Definition of fashion

Fashion is a form of self-expression and autonomy at a particular period & place and in a specific context, of clothing, footwear, lifestyle, accessories, makeup, hairstyle and body posture.

The term fashion describes the manufacturing, mixing and wearing of outfits adorned with specific cultural aesthetics, patterns, motifs, shapes, and cuts, allowing people to showcase their group belonging, values, meanings, beliefs, and ways of life.

Classification of fashion

The major categories which define fashion are as below:

1 Style

2 Basic or classic

3 FAD

4 Fashion forecasting

5 Fashion trends

We can describe the fashion classification in the following way:

1 Style

Style is always constant. It is not changeable like to fashion. It is the modification of fashion. Style is the basic outline of any garment. It is a manner of doing something. It commonly refers to one's fashion or outer appearance. Style word is very popular in fashion. Style is unique but when it is accepted by others then it is called fashion. (Fig 2)

Fig 2

2 Basic or Classic

When a fashion is comparatively constant or long lasting or continuing for many days, such as sari and salwar kameez, it is called basic or Classic.

3 Fad

Fad can be denoted as a short lived fashion, staying for a very little duration of period of time, acceptable by only a certain group of people. In maximum time they are very costly and every one cannot afford to buy it.

4 Fashion Forecasting

Fashion forecasting is the prediction of mood, behavior and buying habits of the consumer that focuses on upcoming trends. It is very important part of fashion scene because when a new garment is designed by a designer and worn, it will not create fashion by itself. It needs to spread fashion with different media. Fashion forecasting is commonly done by many communicating media, such as fashion shows, cinema, newspapers, press, fashion magazines and window display. Generally fashion forecasting includes:

a Consumer research
- Surveys
- In-store informal interviews
- Consumer focus groups

b Market research

c Fashion trends

d Shopping

e Evaluating the collections

f Sales records

g Trend for target markets

5 Fashion Trends

Fashion trend is the most changeable term in fashion. It is the styling ideas that major collections have in common. Fashion trends are influenced by several factors such as economic, political, social and technological. Fashion forecasters can use this information to help determine growth or decline of a particular trend. Sometimes a new trend appears in small doses until it spreads to other collections.

As the mass media notices similarities between collections and highlights them, the media exposure also helps establish the trends. But if the market becomes flooded with a new trend, consumers may react negatively to the overexposure.

© NIMI NOT TO BE REPUBLISHED

Introduction of pattern making, drafting, grading, draping

objectives: At the end of this lesson, you shall be able to

- explain about pattern making, types of pattern, pattern making tools & equipment
- explain drafting, upper and lower basic bodice block drafting, tools and equipment used in drafting
- state introduction, definition and method of pattern grading
- explain about draping process, types of draping, draping tools and equipment.

Introduction of Pattern

Pattern making is a blueprint for the garment on the basis of which the fabric is cut. It is the technical drawing or drafting of a garment, standard size charts, dress forms or figure are measured, these measurements are then converted into 2D pattern and then garment is made from them. Pattern is a hard paper which is made by following each individual component for a style of garment or apparel. Actually pattern is a style or template from which the part of a garment are traced on to fabric before being cut out and assembled. It is one of the most important parts of garment manufacturing industry. Pattern making is a highly skilled technique which calls for technical ability, sensitivity for design interpretation and a practical understanding of garment construction. Pattern making is a bridge function between design and production.

Types of Pattern:

1 Standardized paper pattern

2 Individual paper pattern

3 Final paper pattern

4 Block paper pattern

5 Readymade paper pattern

6 Graded paper pattern

7 Commercial paper pattern

1 Standardized paper pattern

Paper pattern prepared using standardized body measurements are called standardized paper pattern. This method is followed in training and tailoring schools.

2 Individual paper pattern

The measurement of a particular person is taken and a pattern prepared using theses individual measurement. The pattern prepared for a particular person will not suit another person. These are usually done at home and some tailor shop.(Fig 1)

Fig 1

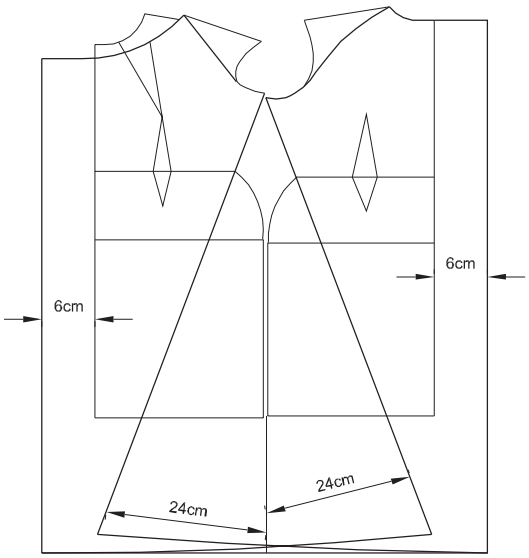

NOT TO BE REPUBLISHED © NIMI

3 Final paper pattern

Once the individual is satisfied with the paper pattern, they are made into final paper pattern. Through, while making individual pattern all the precautions are taken, yet there could be some minor details are corrected and finally made into permanent patterns. (Fig 2)

Fig 2

4 Block paper pattern

Normally theses are made with standard size with cardboard. These are mostly used in the garment industry. The garment made out of these block pattern will fit those who have measurements equal to that of the standardized body measure.(Fig 3)

Fig 3

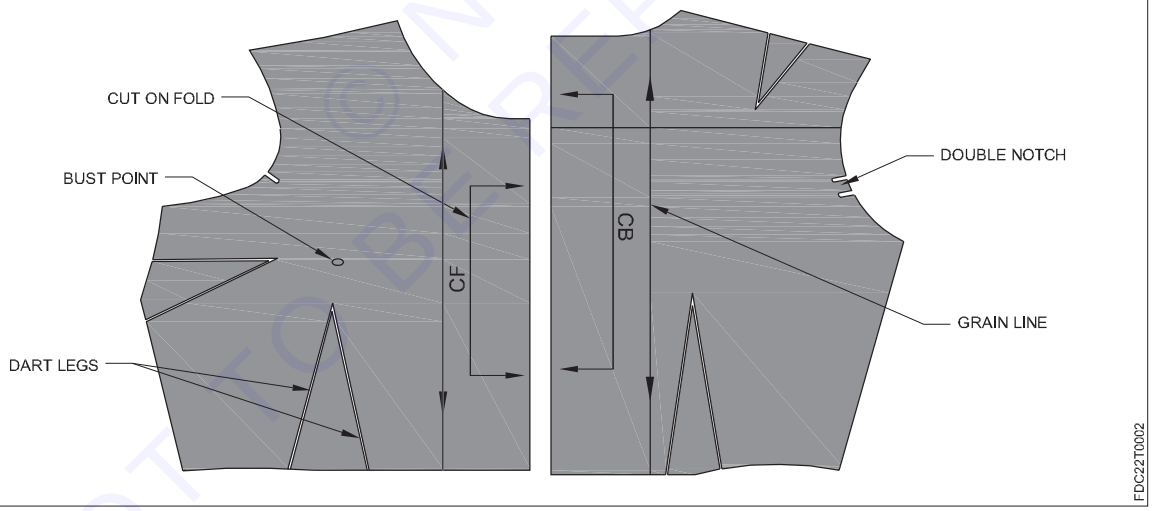

5 Readymade pattern

These are made using a unique type of tracing paper. These can be procured from the market and more useful for people who can do stitching, but not drafting. These can be bought readymade and can be easily used by placing on the material and cutting and stitching accordingly. (Fig 4)

6 Graded paper pattern

Pattern of five consecutive sizes (e.g.30”, 32”, 34”, 35”, and 38”chest size) are marked in one single pattern. The required size according to the individual body measurement is traced separately, cut and used.(Fig 5)

© NIMI NOT TO BE REPUBLISHED

Fig 4

Fig 5

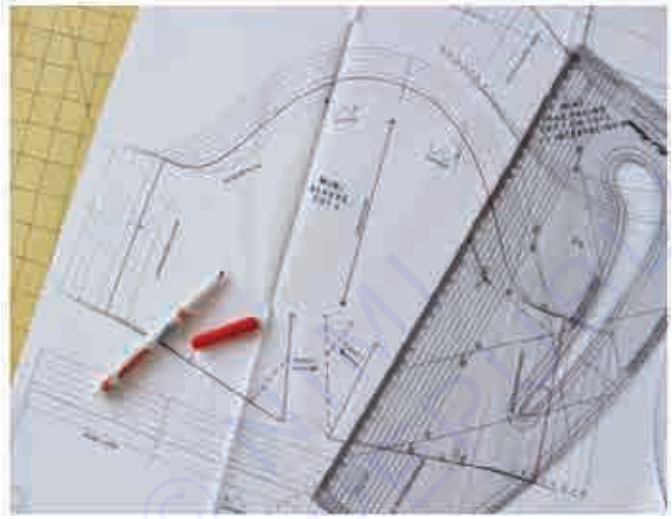

7 Commercial pattern

The paper patterns for different designs are available in readymade forms. These patterns are called commercial patterns. These patterns are enclosed in an envelope along with an instruction sheet. The instruction sheet will provide information about selection of fabric, preparation of fabric, marking, cutting, and steps for sewing. The front side of the envelope contains the front view, side view and back view of the garment design along with the body measurements. (Fig 6)

Fig 6

NOT TO BE REPUBLISHED ©NIMI

Pattern Making Tools and Equipment

Following are some tools for pattern making.

1 Dress forms

2 Measuring Tape

3 Rulers

4 Tailors Square /L Square/L Scale

5 French curve

6 Hip Curve

7 Scissors

8 Notches

9 Tailor's chalk

10 Tracing wheel

11 Pins & pin holder

12 Thick brown paper

1 Dress forms

It is a standardized duplication of a human from. It is cotton padded, canvas covered and set on a movable stand. It is used to take measurement, develop pattern and fit garment sample. (Fig 7)

Fig 7

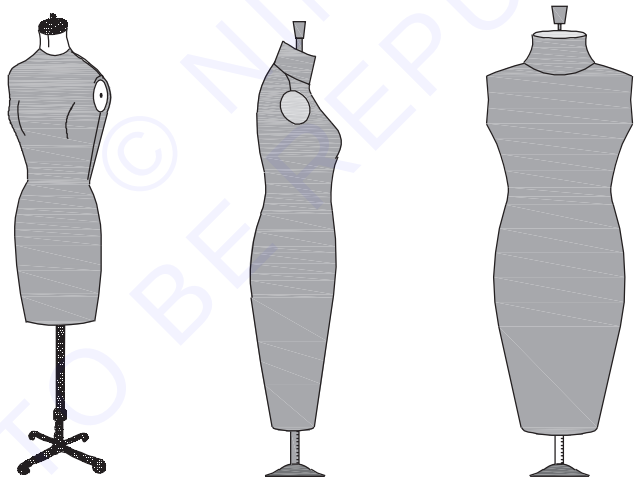

FDC22T0003

2 Measuring Tape

It is 60" long and ½" wide tape with metal strip on either end. It is used to measure a figure or a model form as well as drafting pattern. It is very essential for accurate measurement.(Fig 8)

Fig 8

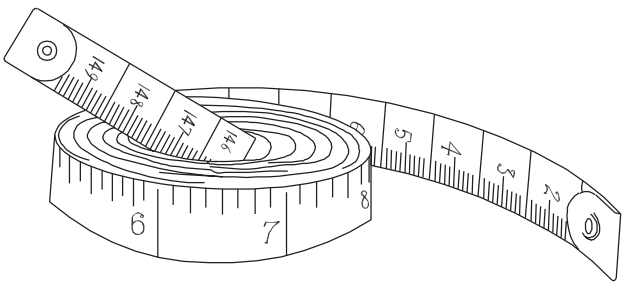

FDC22T0004

© NIMI NOT TO BE REPUBLISHED

3 Ruler

It is 12”/24, wooden, metal or plastic rulers. It is used for drawing straight lines as per measurement. The marking and division on the ruler should be clear and accurate. (Fig 9)

Fig 9

4 Tailors Square /L Square/L Scale

It is a 24”x14”metal or plastic ruler with two arms that from a 90 degree angle. It is used to find a 45degree angle mark outside and inside comers extend line through corner. (Fig 10)

Fig 10

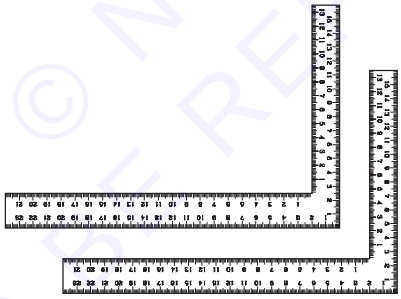

FDC22T0005

5 French curve

It is a curved plastic or metal ruler. It is used to draw curved lines of armholes and neckline. (Fig 11)

Fig 11

FDC22T0006

© NIMI NOT TO BE REPUBLISHED

6 Hip Curve

It is a cutting tool, having a size of 8”to 12, with two sharply straight blades and used to cut paper pattern and fabric. (Fig 12)

Fig 12

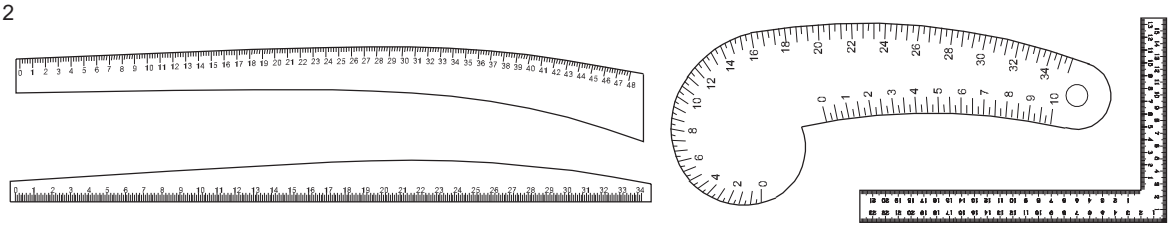

FDC22T0007

7 Scissors

It is a cutting tool, having a size of 8” to 12”, with two sharply pointed straight blades and used to cut paper patterns and fabric. Paper cutting scissors and cloth cutting scissors are different. (Fig 13)

Fig 13

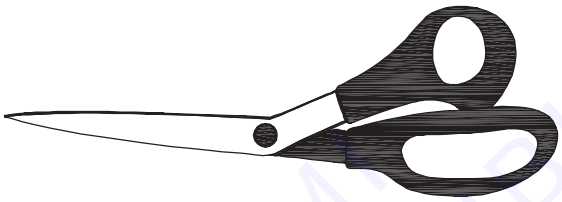

FDC22T0008

8 Notches

It is a punching tool that makes ‘U’ shaped notch marks which indicates seam allowance lines etc. It looks like a single punch machine. (Fig 14)

Fig 14

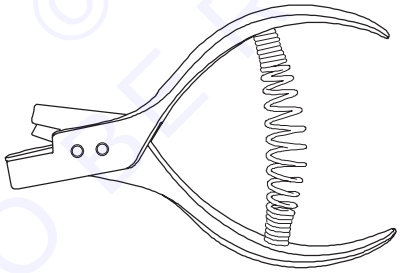

FDC22T0009

9 Tailors’ chalk

These are chalks which can be rubbed off easily when used on fabric surface and available in various colors with fine edges. It is used for marking the lines and design details on fabric. (Fig 15)

Fig 15

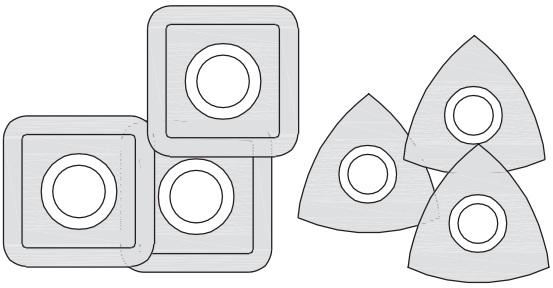

FDC22T0010

© NIMI NOT TO BE REPUBLISHED

10 Tracing wheel

It is a toothed metal with a wooden or plastic handle. It is used to transfer lines from one pattern to another or from final pattern to fabric. (Fig 16)

Fig 16

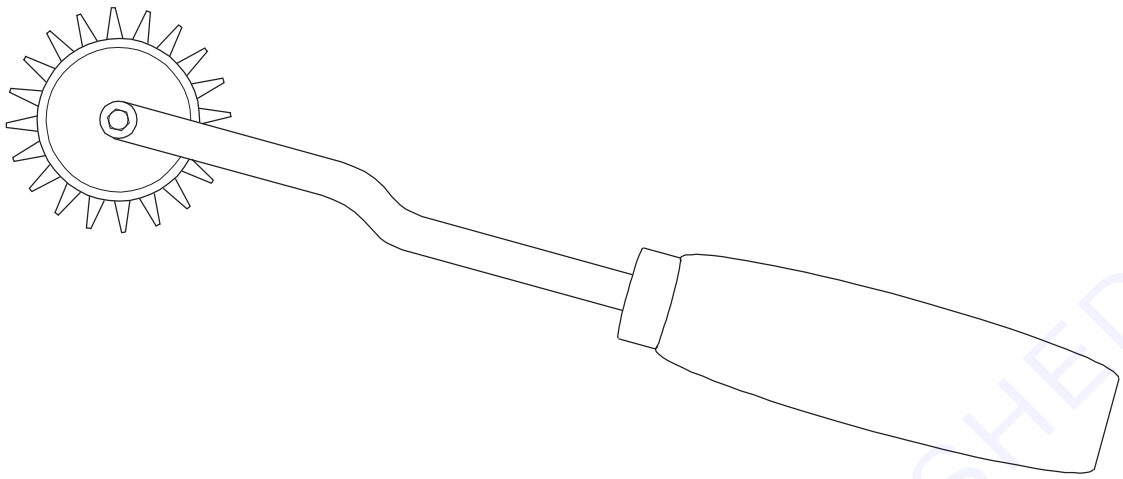

FDC22T0011

11 Pins & pin holder

Pins and small stuffed pillow are also required in pattern making. Pin holder is used to hold pins and needles for easy accessibility and storage. (Fig 17)

Fig 17

12 Brown paper

These are brown paper rolls or sheets having various size and thickness and used for preliminary patterns drafting and also for the development of the final pattern. Strong and thick brown papers are used for making patterns that can be used repeatedly. (Fig 18)

Fig 18

NIMI NOT TO BE REPUBLISHED

Introduction of drafting

Introduction of drafting

Drafting is the process of creating a flat pattern on paper from measurements or from draping a fabric on a dress form. This method is used to create the basic shapes that will be used to create the garment. It's more mathematical and technical than draping. (Fig 1)

Fig 1

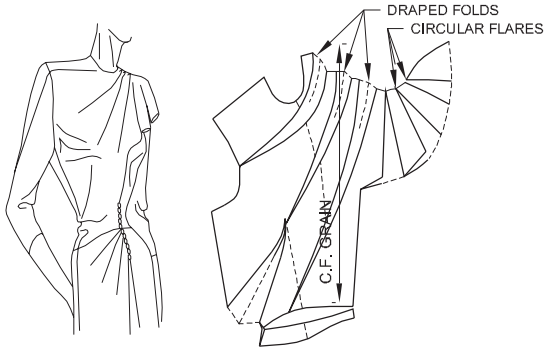

Definition of drafting

Drafting is defined as a method of drawing patterns on paper with mechanical precision using body measurements. A basic pattern or a 'block' or a 'master' or a 'foundation pattern' can be generated through drafting. A 'slope' or 'block' is a custom-fitted basic pattern from which patterns for many different styles can be created. It consists of five basic pattern pieces or set – bodice front, bodice back, skirt front, skirt back and the sleeve. This basic block does not contain seam allowances, hem allowances. Design features are frequently added to a copy of this block to create variety in a design.

Drafting is the technique of construction a complete garment by giving construction methods for the given measurement and making a draft using a smaller scale on a graph paper for example.

1inch =1cm

or 1inch = 1inch on 1/4inch scale.

There are two types of drafting scales: inch scale and cm scale

1 Various inch scales that can be used in drafting: 1/4inch scale, 1/5

Inch scale, 1/6th inch scale and1/8 inch scale.

2 Various centimeter scales that can be used in drafting: 1/4 cm

Scale, 1/5 cm scale, 1/6 cm scale and 1/8 cm scale.

Upper basic bodies block drafting

A basic bodice is the body of a blouse or top; the garment worn on the upper part of your body. A basic bodice block is a great starting point for creating endless Designs; it can be used on its own or be paired with a sleeve block to make blouses, shirts, dresses, blazers, jackets and coats.

Drafting of back & front basic pattern

Get one-half sheet of pattern paper. Construct a of back and front bodice pattern. Draw perpendicular line T

- 1-2=3/4 inch (2cm) down
- 1-3=4 inches (10cm)
- 1-4=5.5 inch (14cm)
- 2-5= bust point height measure
- 1-6= back figure
- 2-7= front figure
- 8 is the middle of 2 and 7

© NIMI NOT TO BE REPUBLISHED

- Square out 2,4,8,5 and 7 to the right. (Fig 2)

Fig 2

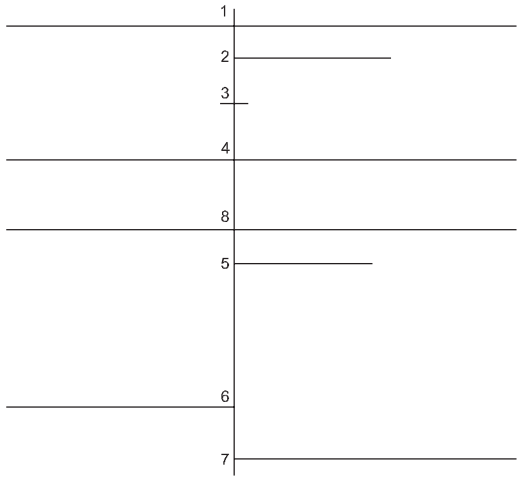

FDC22T0013

Drafting the back & front basic pattern

- 1-8 = 8.5 back neck or 2.5 inch (6.5cm) to 2.9 inches (7.5cm). Connect 8Bto 2 with a French curve. (Fig 3)
- 1-9B= ½ shoulder+5/8 inch (1.5cm). Square down 9B
- 9B-10B-13/8 inches (3.5cm). Connect 8B to 10B
- 4-11B=1/2 shoulder minus 5/8 inch (1.5cm)
- 8-12B=1/4 bust=5/8 inch (1.5cm). Connect 10B, 11B and 12B with a French curve
- 8-13B=1/2 bust point width
- 6-14B= ½ bust point width. Connect 13B to 14B
- 6-15B= ¼ waist= 11/8 inch (3cm). connect 12B to 15B
- 14B-16B= 5/8 inch (1.5cm). Connect 16B-18B and 17B-18B.
- 14B-17B=5/8 Inch (1.5cm). Connect 16B-18B and 17B-18B.
- 13B-18B=5/8 inch (1.5cm). Connect 16B& 18B and 17B-18B
- 19= is the middle of 8B and 10B. Square down 19
- 20= 3 inch (7.5cm). 21-19, 22-19= ¼ inch (0.5cm). Connect 22 to 20 and 21 to 20
- Fold 16Bover 17B

Fig 3

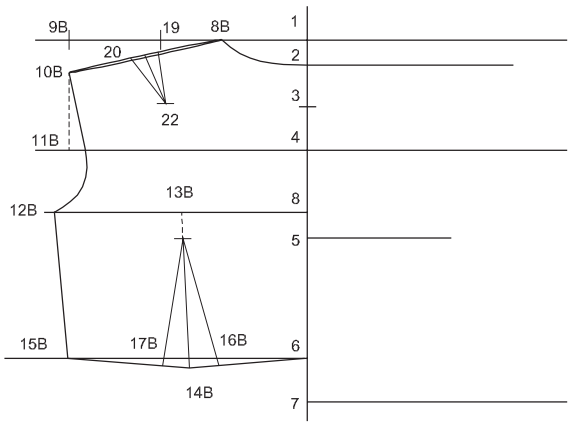

FDC22T0014

NOT TO BE REPUBLISHED © NIMI

- Connect 6 to 15B
- Fold 22 over 21
- Connect 8B to 10B
- Measure 12B and 15B (side length)
- Side length of back and front bodice should be equal. Fig 3

Drafting the back and front basic pattern

- 2-8F =1/2back neck or 6.5 to 7.5 cm
- 2-9F=1/2 shoulder. Square down 9F
- 9F-10F= 4.5 cm. connect 8Fto 10F
- 4-11f = ½ shoulder minus ¾ inch (2cm).
- 812F = 1/4bust +1 inch (2.5cm). Connect 10F, 11F, and 12F with a French curve.
- 5-13f = ½bust point width.
- 7-14F =1/2 bust point width. Connect 13F to 14F
- 7-15F= ¼ waist+4cm. connect 12Fto 15F with dotted line
- 14F-16F =3/4 inch (2cm).
- 14F-17F =3/4 inch (2cm).
- 13F-18F =5/8 inch (1.5cm). connect 16F-18F, 17F to 18F
- 12F-19F =31/5 inches (8cm).
- 19F-20F= difference of 6 and7
- 21- Middle of 19F and 20F. connect 21Fand 13F
- 13F-22F = 5/8 inch (1.5cm). Connect 19Fto 20F to 22F (side dart)
- Fold 20F over 19F
- Connect 12F and 15F with a straight line
- Fold 16F over 17F
- Connect 7F to 15F
- 12F-15F with a dart closed = 12B -15B of back bodice (side length) (Fig 4)

Fig 4

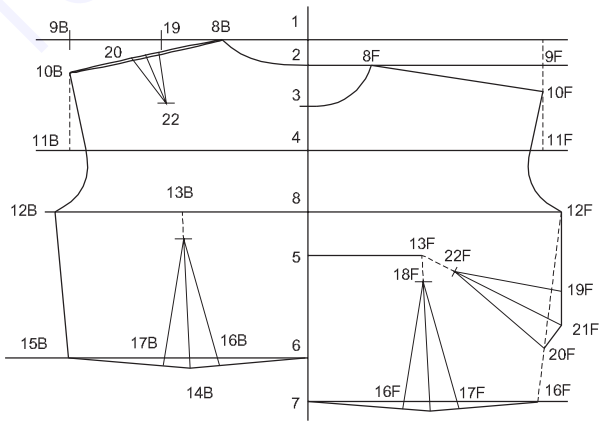

NOT TO BE REPUBLISHED © NIMI

Introduction to pattern grading

Introduction

Pattern grading is the process of turning a sample size (sometimes referred as base size) into additional smaller or larger sizes. Pattern grading is done using a size specification sheet. Grading does not create a new shape; it increases or decreases the size of the original shape of the garment. (Fig 1)

Fig 1

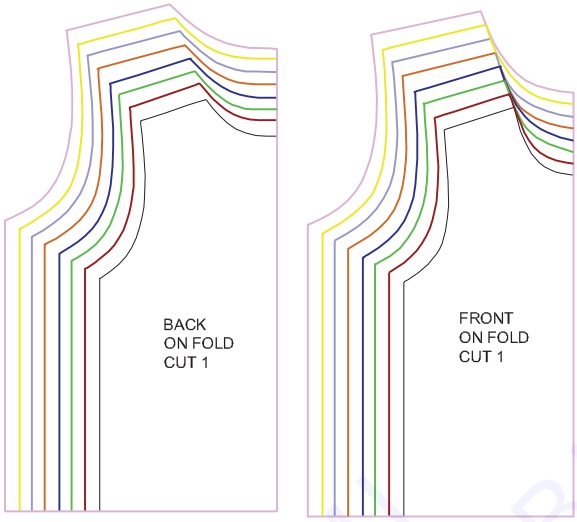

Definition of Pattern Grading

Pattern grading is the process of turning base size or sample size patterns into additional sizes using a size specification sheet or grading increments. This can be done manually or digitally using computerized pattern drafting software. In the garment industry, patterns are used in order to cut the fabric pieces and to make the garment. Patterns are essentially made so that the same style can be easily duplicated when it is needed and multiple pieces can be efficiently made. (Fig 2)

Fig 2

WOMENS SIZES (CM)						
Size	XS	S	M	L	XL	XXL
Bust (cm)	85	91	95	100	105	110
Waist (cm)	80	86	90	95	100	105
Hips (cm)	90	96.5	100	105	110	115
Front length (cm)	115	117	115	115	115	115

WOMENS SIZES (INCH)						
Size	XS	S	M	L	XL	XXL
Bust (in)	34	36	38	40	42	44
Waist (in)	32	34	36	38	40	42
Hips (in)	36	38	40	42	44	46
Front (in)	46	46	46	46	46	46

NOT TO BE REPUBLISHED © NIMI

Method of Pattern Grading

There are three basic methods of pattern grading

1 Cut and spread method

2 Pattern shifting

3 Computer grading

Cut and spread

This is considered the easiest method. It is performed by cutting the pattern and spreading the pieces by a certain amount, to grade up or down. The only tools needed are a pencil, ruler, scissors and measuring tape. (Fig 3)

Fig 3

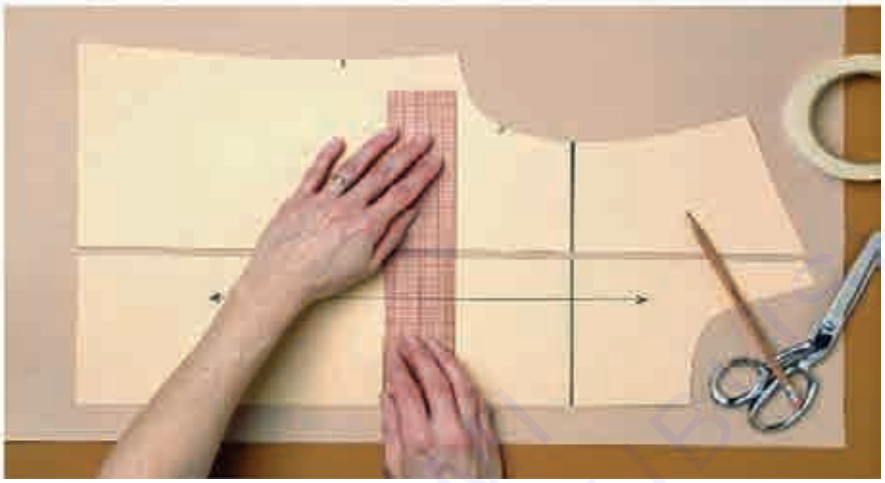

Pattern shifting

This method is done by moving the pattern around at a constant distance. The designer redraws the outline in order to produce the same results as the previous cut and spread method. (Fig 4)

Fig 4

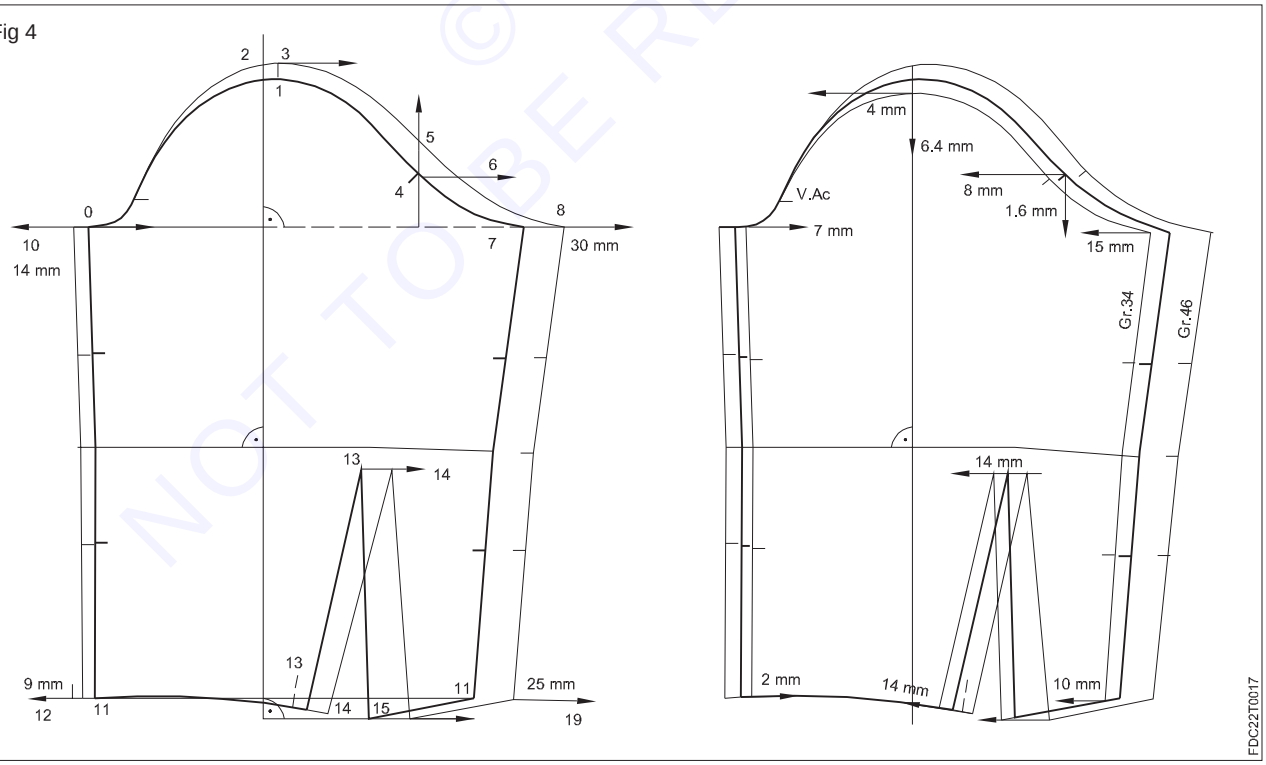

Computer grading

It is considered the fastest method. It basically uses the same process as the 'cut and spread' and 'pattern shifting' methods and digitizes them. (Fig 5)

© NIMI NOT TO BE REPUBLISHED

Fig 5

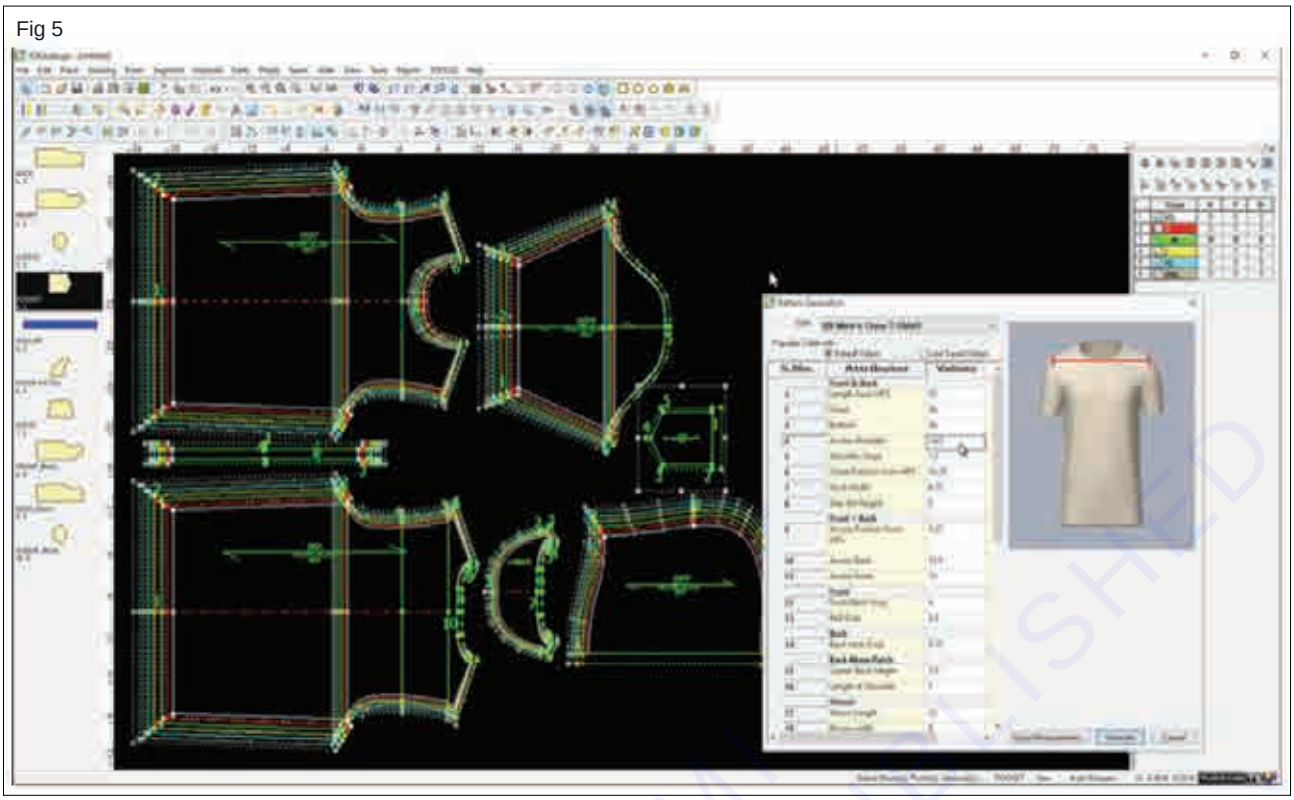

Introduction of draping

Introduction

Draping involves creating a pattern by shaping fabric directly on a dress form, rather than by drawing a flat pattern on paper. The draping process allows for a more intuitive and sculptural approach to pattern making and is often used to create highly fitted or draped garments.

Definition of Draping

Fashion draping is considered as one of the oldest method used since the 18th century. Currently, it is considered to be an important aspect in the process of fashion designing. This process consists of positioning and pinning fabric on a standard size dress form to develop the structure of a garment design. Many types and sizes of dress forms are designed for women, men and children to fulfill the requirement by using draping method. A garment can be draped using a design sketch as a support, or a fashion designer can play with different kinds of fabric and the way it falls to create new designs at the start of the dress design process. After draping, the toile fabric is take out from the dress form which was used to create the sewing draped pattern for making fashionable garment to suit an individual. (Fig 1)

Types of Draping

- Origami Draping
- Cowl Draping
- Bias Draping
- Digital Draping

In addition to Modulate and Fluting, we explore alternative draping methods here that preserve the long-standing origins of fashion draping in haute couture and everyday wear while fostering constant innovation within the vibrant fashion ecosystem.

Origami Draping

It is one such method that is done By folding the fabric rather than sewing it into a garment, a technique known as “origami shading” infuses the fabric with Japanese shadow art and gives the apparel a distinctive look that

Fig 1

combines unusual aesthetics and practicality. The sculpture takes on more complexity and interest with each fold, which makes it a popular among designers who want to push the envelope and investigate the form outside of convention. (Fig 2)

Fig 2

Cowl Draping

Cowl draping is a throwback piece that has made a comeback in contemporary apparel. It works with fabric to produce dangling folds around the neckline or waist, giving the piece a dramatic impression and a hint of elegance. Cowl draping is a time-tested method that turns simple outfits into eye-catching statements, whether on flowing evening dresses or breezy shirt. (Fig 3)

Fig 3

Bias Draping

It is a breakthrough in the field of draping popularized in the 1920s by fashion queen Madeleine Vionnet, is another popular invention in the field. It drapes on the bias, or diagonal, as it plunges into the fabric's pliability. This produces a garment that essentially follows the natural curves of the body, offering the best possible balance between comfort and style. (Fig 4)

Fig 4

© NIMI NOT TO BE REPUBLISHED

Digital Draping

The disruptive power of technology is always present in the fashion sector, which never stops. The future of fashion is being quickly ushered in by digital drapery. Designers are able to electronically drape and shape clothing on digital figures by using 3D imaging and simulation-based software, which removes the physical limitations of traditional draping techniques. By allowing for previously unheard-of innovation in fabric manipulation, this elevates the importance of efficiency and environmentally friendly solutions. (Fig 5)

Fig 5

Draping Tools and equipment

Draping tools are necessary to drape, measure, mark and draft designs.

1 **Awl:** It is a pointed metal instrument used for punching holes for belt eyelets.(Fig 6)

Fig 6

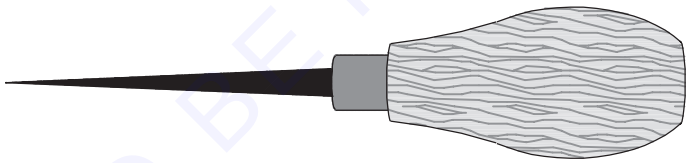

FDC22T0018

2 **18-inch Clear Plastic Ruler:** It is a two-inch wide ruler divided into 1/8-inch grids. (Fig 7)

Fig 7

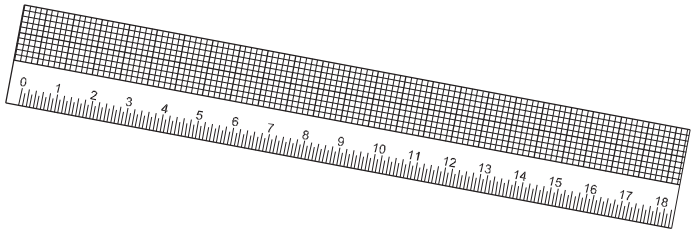

FDC22T0019

3 **French Curve Ruler:** An irregular curve ruler used to shape and curve edges of collars,necklines, crotch seams, armhole and hip curves. (Fig 8)

© NIMI NOT TO BE REPUBLISHED

Fig 8

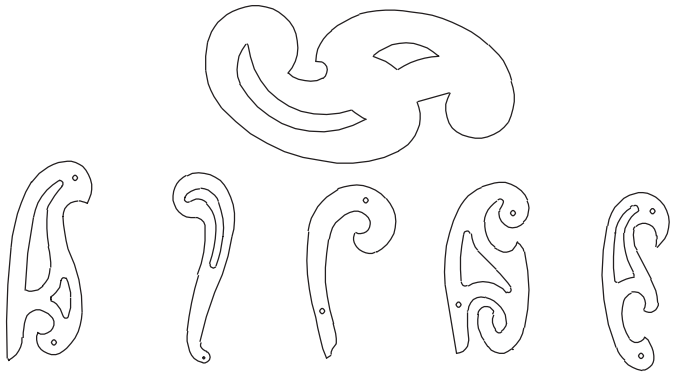

FDC22T0020

4 **Iron:** A steam-and-dry iron is used to smoothen and flatten and aid in blocking muslin. (Fig 9)

Fig 9

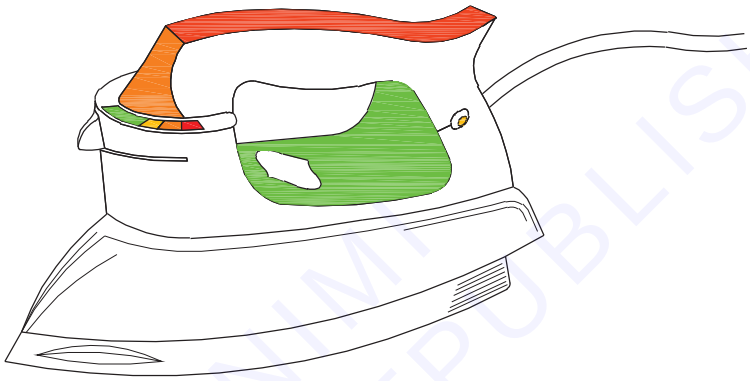

FDC22T0021

5 **L-Square:** A metal or plastic ruler with two arms of different lengths meeting at right angles.(Fig 10)

Fig 10

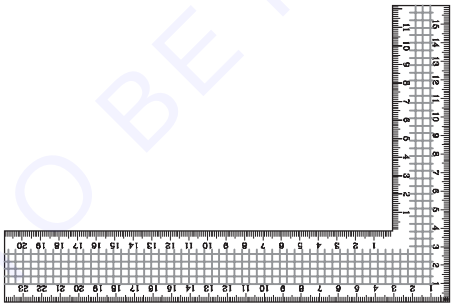

FDC22T0022

6 **Muslin:** An inexpensive fabric, on which the grain and cross grain are quite visible. Basically it is used to drape garments made of woven goods. (Fig 11)

© NIMI NOT TO BE REPUBLISHED

Fig 11

7 **Notches:** A punching tool used to mark the edge of a slope or paper pattern. (Fig 12)

Fig 12

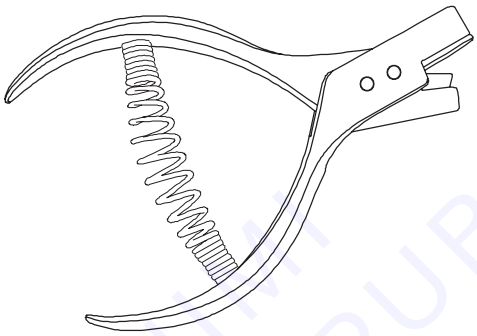

FDC22T0023

8 **Pencils:** Pencils are used in developing muslin patterns. (Fig 13)

Fig 13

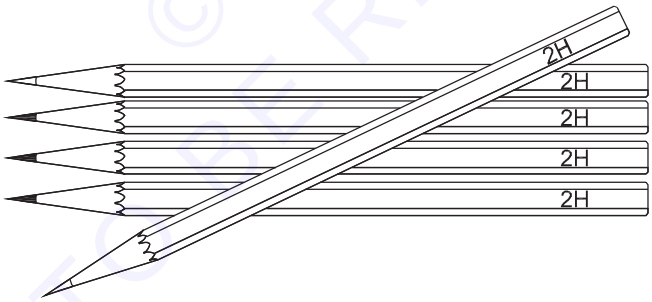

FDC22T0024

9 **Pin Cushion or Pin Dispenser:** A sewing tool that keeps pins organized in a convenient place. (Fig 14)

Fig 14

10 **Scissors and Shears:** Shears are usually four-to eight inches long and made of steel Bent-handled shears are excellent for easy and straight cutting. (Fig 15)

© NIMI NOT TO BE REPUBLISHED

Fig 15

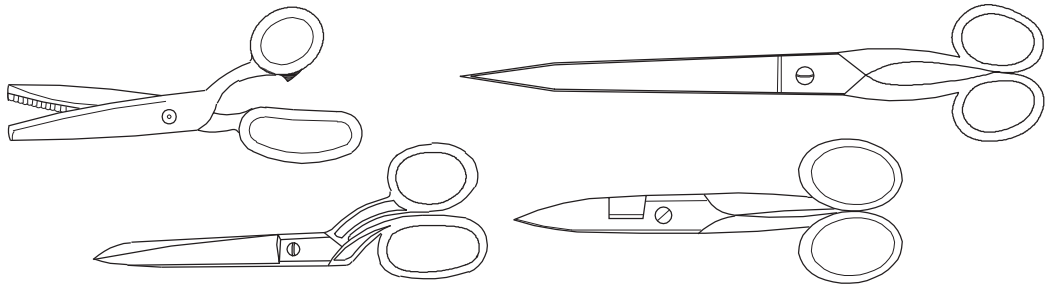

FDC22T0025

11 Style Tape: A narrow, woven tape that is used to define style lines on the dress form. (Fig 16)

Fig 16

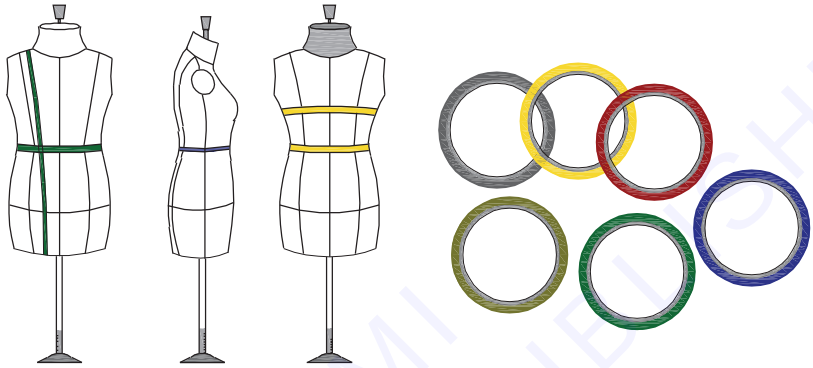

FDC22T0026

12 Straight Pins: Dressmaker pins with sharp tapering points that will not rust are used to anchor muslin or fabric to the dress form while draping. (Fig 17)

Fig 17

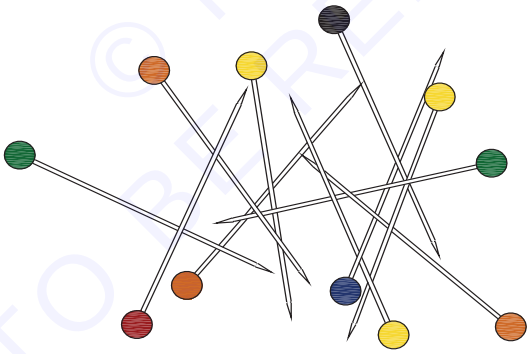

FDC22T0027

13 Tailor's Chalk: A small piece of chalk, approximately 1 '/2" square, with two tapered edges. It is used to mark lines temporarily on different points of garment and other alteration points. (Fig 18)

Fig 18

14 Tracing Wheel: It is a sharp, spike edged circular wheel with a handle, particularly used to transfer markings from the drape to the pattern paper. (Fig 19)

© NIMI NOT TO BE REPUBLISHED

Fig 19

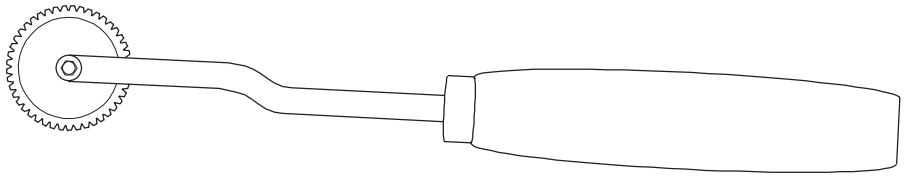

FDC22T0028

15 Yardstick: A wooden or metal ruler one yard in length (36 inches) that is marked in inches or metric terms, An aid for laying pattern pieces on the straight grain of the fabric or for measuring hemlines. (Fig 20)

Fig 20

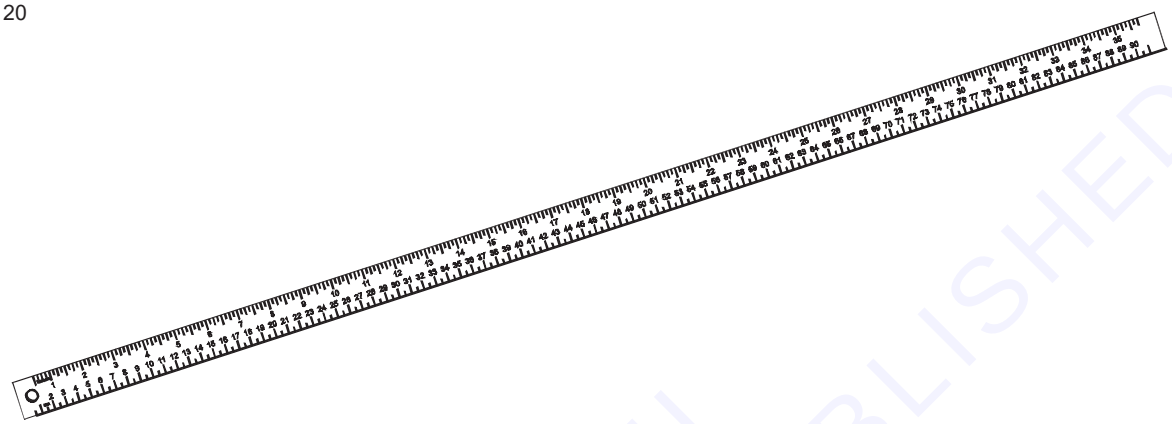

FDC22T0029

Principles of Draping

1 Fabric must be used on the appropriate grain lines, according to the design.

2 While using the dress form/mannequin, the bust line, hipline, and waistline need to be parallel to the floor.

3 Usage of good quality pins.

4 Seam lines of the dress form need to be well-established before draping starts in order to avoid the dress from losing shape.

5 The muslin piece must be torn from the bolt of the cloth, rather than being cut. This helps to retain the grain lines.

6 The grain lines on the muslin must be right angles to each other.

7 Grain lines must be marked on the muslin and cross grain must be marked at the fullest part of the dress form/ mannequin.

8 The fabric must to the dress format the seams and labeled points.

9 The curved edges must be gently handled and refrain from pulling the fabric.

10 All lines must be clearly marked.

11 Ensure all the design and seam lines are marked with small lines or dots at regular intervals; this will help while draping all the pieces of the garment.

12 Use an X mark when darts, pleats, and tucks cross seam lines.

13 In order to create a symmetrical design, drape only half of the design and copy it in full.

14 The muslin/fabric used for draping should be inexpensive and needs to resemble the original fabric.

© NIMI NOT TO BE REPUBLISHED

LESSON 2 : Introduction of Darts and dart manipulation

Objectives

At the end of this lesson, you shall be able to

- state Introduction, definition and types of dart
- about dart manipulation, dart styles and dart manipulation techniques
- difference between slash- spread and pivot method.

Introduction of dart

A tuck in the fabric that is sewn. It is used to define the shape of a garment making a two dimensional piece of fabric into a three-dimensional garment. Darts are usually seen where the body curves: bust, waist, and hip.

Definition of Dart

A dart creates a curve in the fabric and allows the fabric to conform to the shape of the body. The darts in a garment are what make the garment fit. The adjustment of darts for varied shapes is crucial to proper garment construction. The most common places for darts are in the bust and buttock areas. (Fig 1)

Fig 1

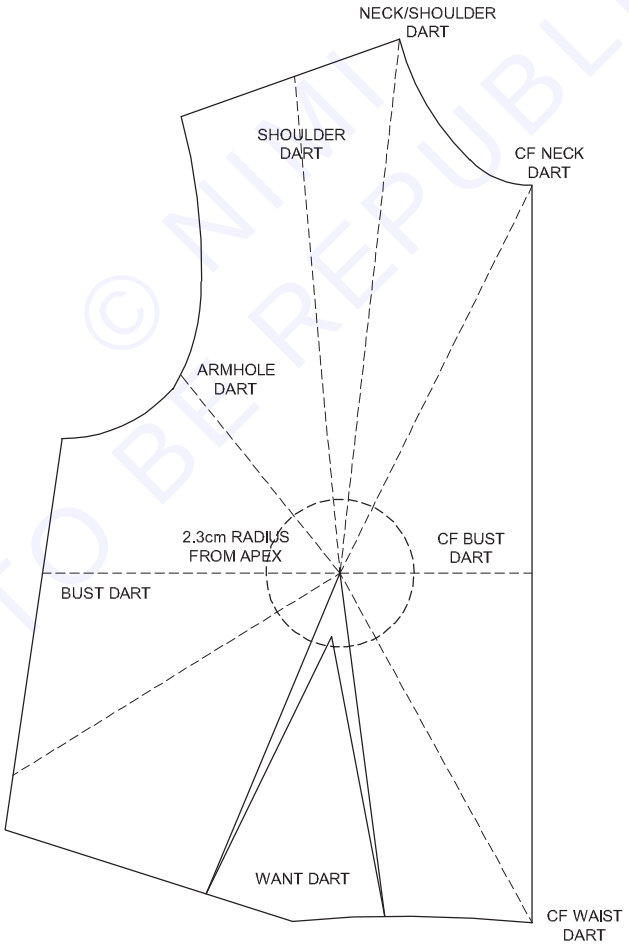

Different Types of Darts

The different types of darts are discussed below:

1 Straight dart

2 Curved outward dart

© NIMI NOT TO BE REPUBLISHED

3 Curved inward dart
4 Neckline dart
5 Double pointed dart
6 Dart in interfacing

1 **Straight dart:** It is a straight line of stitching from the point to the seam line. This can be noticed in the underarm of the front bodice, back skirt, shoulder, elbow and back neckline.(Fig 2)

Fig 2

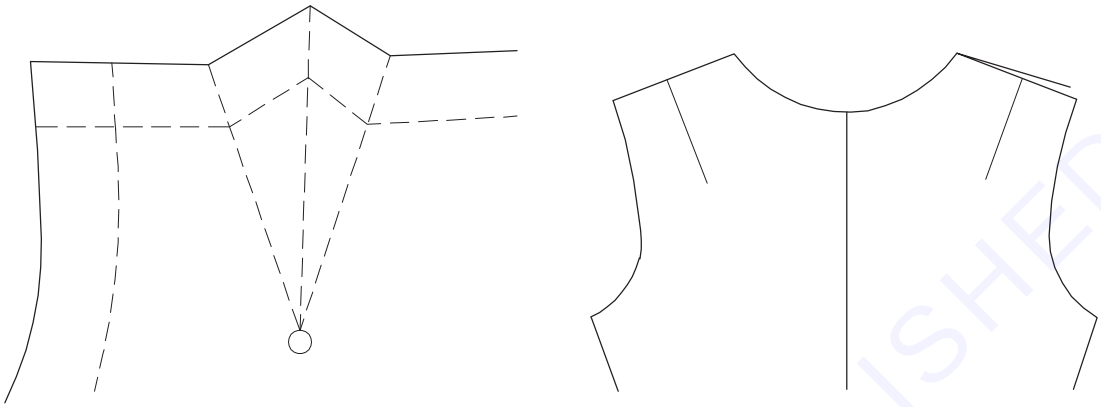

2 **Curved outward dart:** The stitch line curves outward along the path from the point to the seam line. This gives a snugger fit to the garment. This is sometimes used on a bodice front to make a mid-body fit snug. (Fig 3)

Fig 3

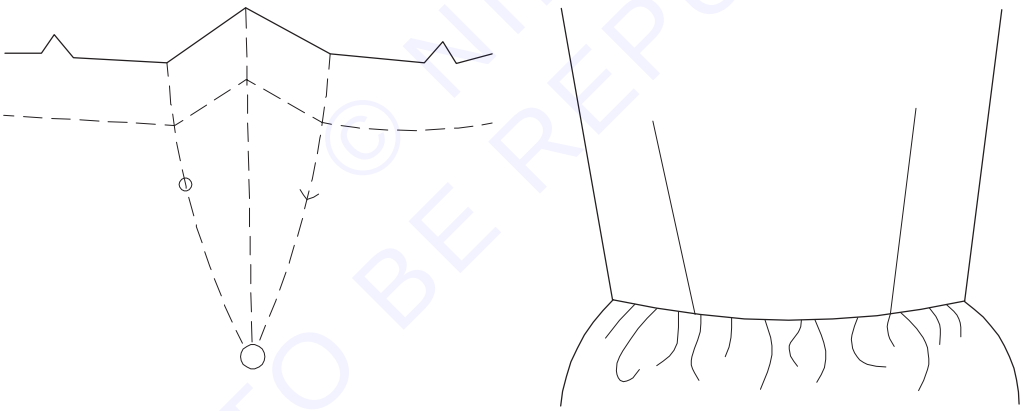

3 **Curved inward dart:** The stitch line curves inward from the point to the seam line. This facilitates a better fit along the body curve. It is frequently used in pant and skirt fronts. (Fig 4)

Fig 4

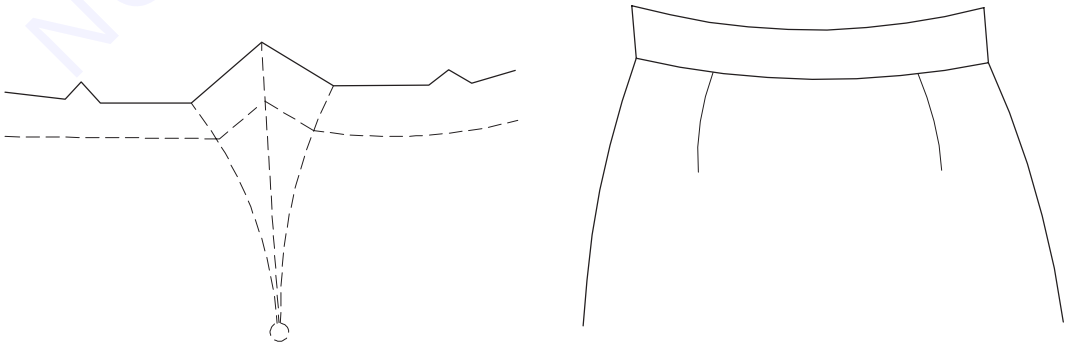

© NIMI NOT TO BE REPUBLISHED

4 **Neckline dart:** This is usually a solid line marking on the back neckline indicating a straight dart of 1/8″. (Fig 5)

Fig 5

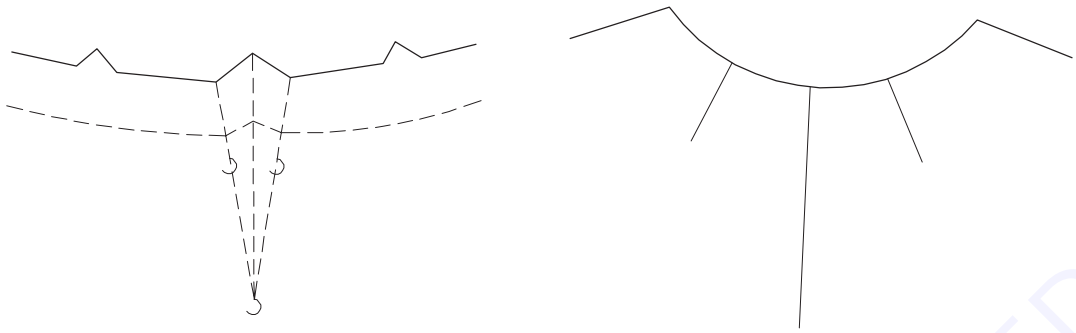

FDC22T0034

5 **Double pointed dart:** This dart is unique as it tapers in a straight line from the middle to both the ends and is clipped at the widest part. It is usually made from the waistline. It finds application in princess and A-line dresses, over blouses and jackets. (Fig 6)

Fig 6

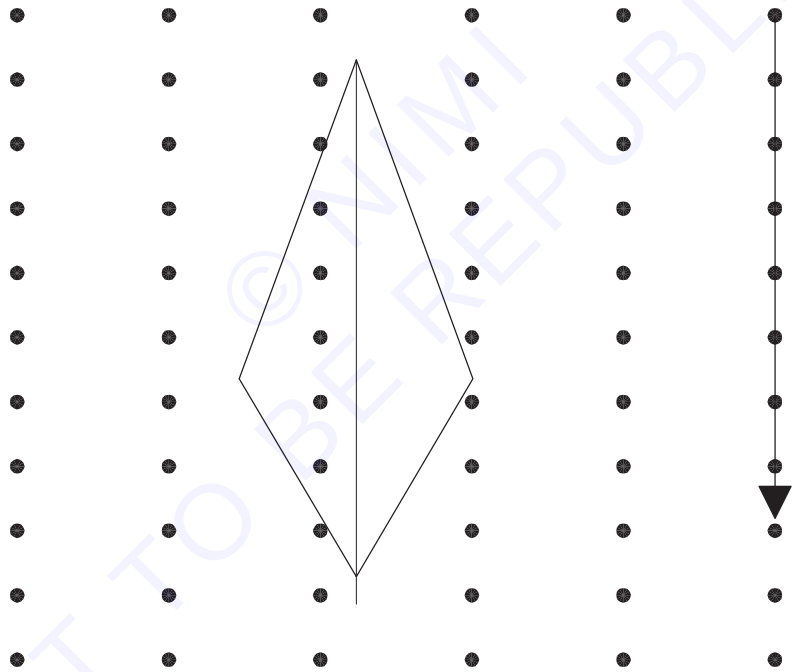

FDC22T0035

6 **Dart in interfacing:** In this case, a slash is made on the fold line. Then the cut ends are lapped along the line of stitching and zigzagged to keep in place. (Fig 7)

© NIMI NOT TO BE REPUBLISHED

Fig 7

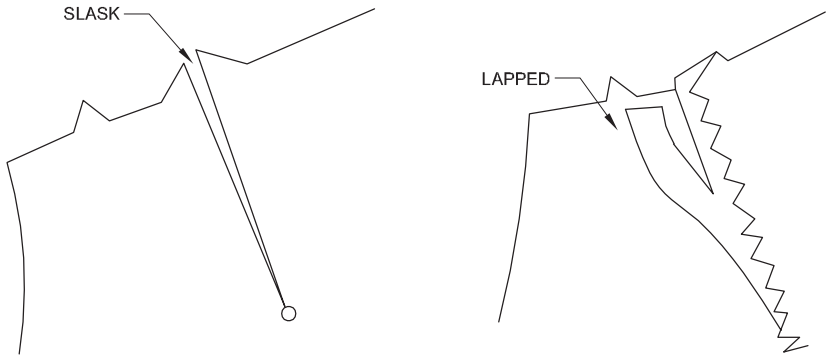

Dart Manipulation

Dart manipulation is the art of taking the existing darts in a sewing pattern, and manipulating them around the pattern to achieve something else. It's a common technique used in pattern making. (Fig 8)

Fig 8

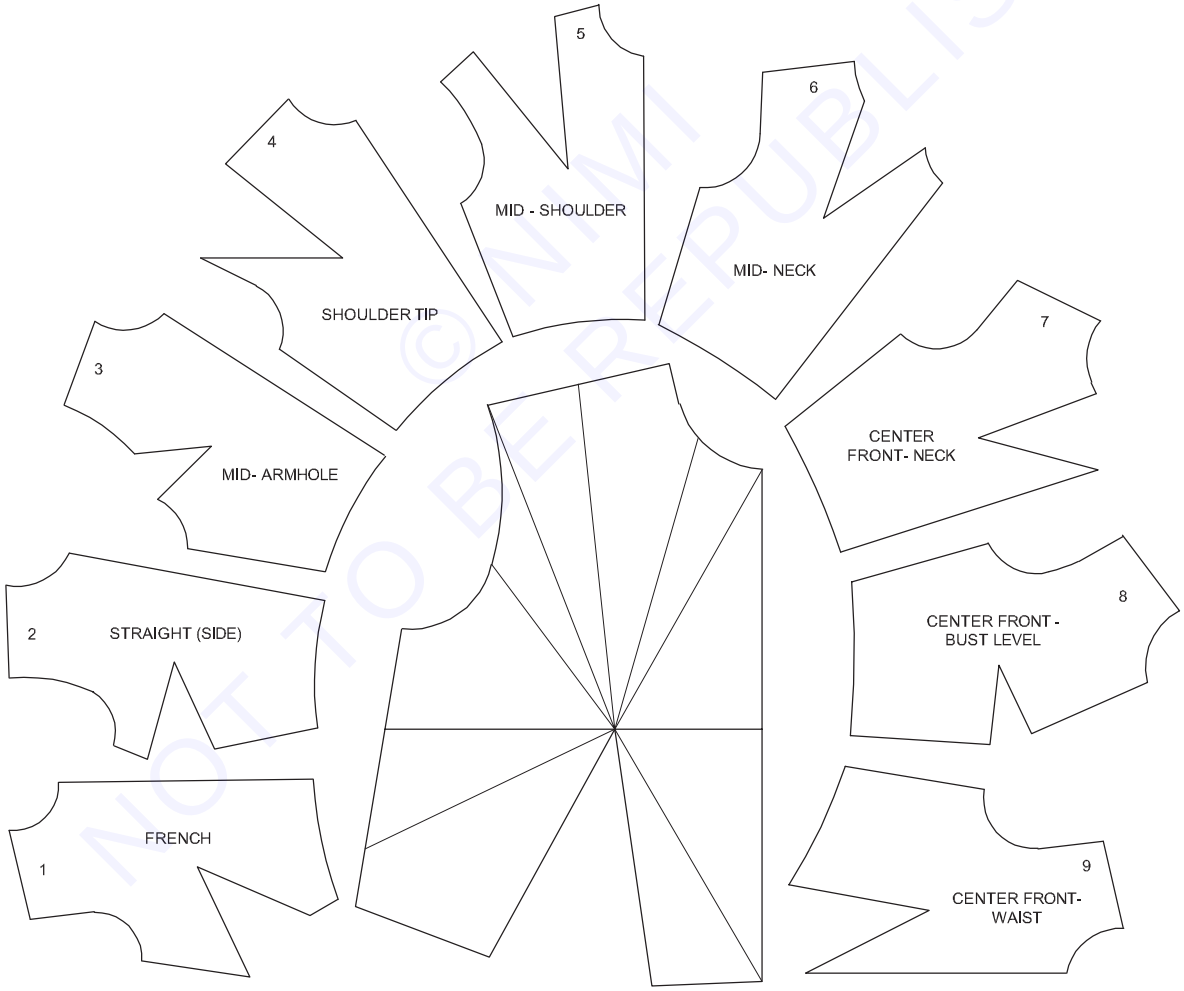

Different Dart Styles

There are 10 styles of dart on the basic front bodice.

1 Standard waist dart

2 French dart

© NIMI NOT TO BE REPUBLISHED

3 Armhole dart

4 Mid shoulder dart

5 Centre front bust dart

6 Centre front neck dart

7 Straight side seam dart

8 Shoulder tip dart

9 Mid neck dart

10 Centre front waist dart

1 **Standard Waist Dart:** The standard waist dart is a vertical dart from the waistline up to the bust point. (Fig 9)

It is one of the key darts used for manipulating fabric around the bodice. The standard waist dart can be divided into two or three darts and sewn as darts, external pleats or tucks, for some style.

Fig 9

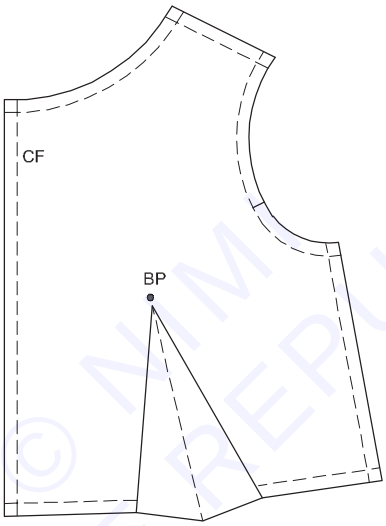

FDC22T0038

2 **French Dart:** The French dart is a diagonal dart from the side seam up to the bust point. It is created by transferring the excess in the waist dart into a dart at the lower side seam The French dart is often found on silk tops for a more 'finished' look.(Fig 10)

3 **Armhole Dart:** The armhole dart is a diagonal dart from the mid armhole down towards the bust point- usually 2-3 inches up from the waistline. This is quite a popular dart, used to shape tops and blouses around the bust that then fall straight down or into a flared hem.(Fig 11)

4 **Mid-Shoulder Dart:** The mid-shoulder runs from the middle of your shoulder, down to the bust point. You'll often find this dart is drafted in when drafting a female bodice block. (Fig 12)

5 **Centre Front Bust Dart:** The centre front bust dart is a horizontal dart from the centre front towards the bust point. If the pattern is cut on the fold, this dart becomes a fish-eye dart, running horizontally. This dart is often manipulated to create a little gathering on the centre front rather than an actual dart. (Fig 13)

6 **Centre Front Neck:** The centre front neck dart is a diagonal dart from the centre front down to the bust point. It is often used as part of a style-line to suppress the fabric in an interesting way. (Fig 14)

7 **Straight Side Seam Dart:** A straight side seam is a horizontal dart from the side seam towards the bust point – the least used dart by me when I'm working on dart manipulation! (Fig 15)

8 **Shoulder Tip Dart:** The shoulder tip dart is a more dramatic diagonal dart from the shoulder tip, running in and down; to the bust point. Using a dart in this position is tricky, because you do end up with a very thin section of the bodice pattern next to the shoulder. (Fig 16)

9 **Mid-Neck Dart:** A mid-neck dart – from the middle of the neck down to the bust point – is often used to open up the neckline and add fullness in the form of gathers around the neckline. (Fig 17)

© NIMI NOT TO BE REPUBLISHED

Fig 10

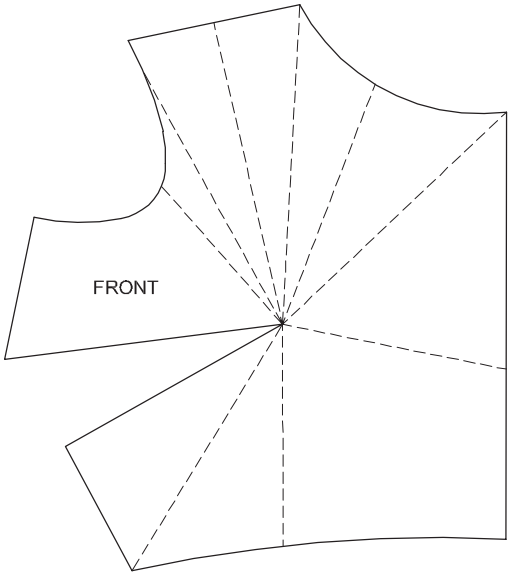

FDC22T0039

Fig 11

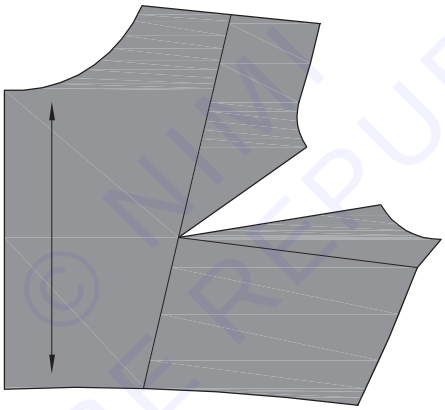

FDC22T0040

Fig 12

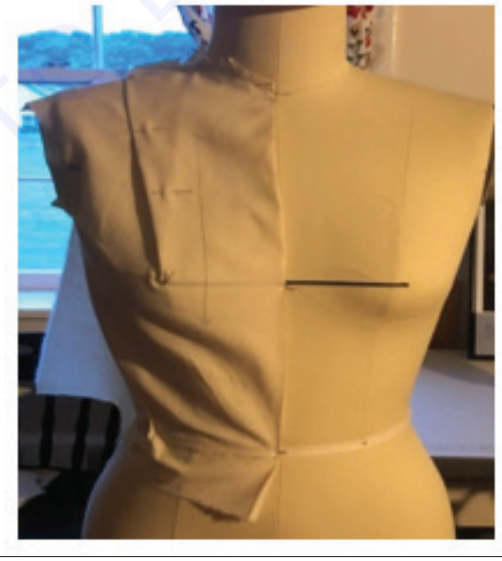

NOT TO BE REPUBLISHED © NIMI

Fig 13

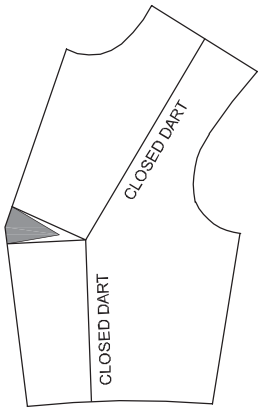

FDC22T0041

Fig 14

Fig 15

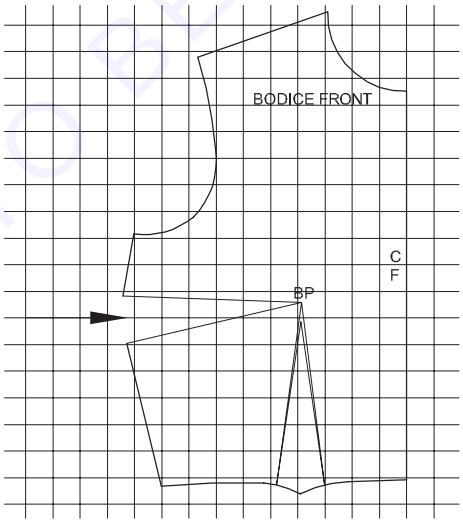

FDC22T0042

© NIMI NOT TO BE REPUBLISHED

Fig 16

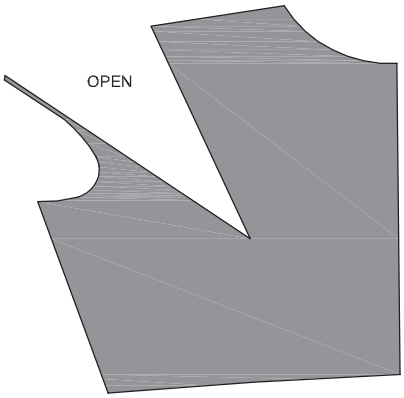

FDC22T0043

Fig 17

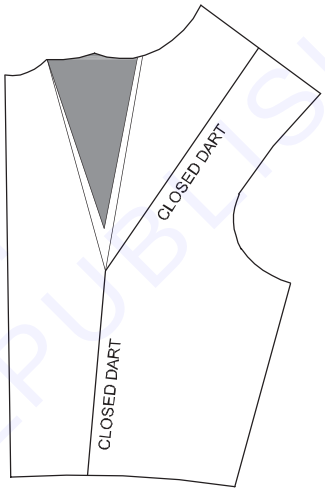

FDC22T0044

10 **Centre Front Waist Dart:** The centre front waist dart is manipulated from the centre waist to run diagonally from the waistline at centre front, up to the bust point. You can see from the various overview images above that in the examples, the dart is drawn as a straight line on the bodice outline. (Fig 18)

Fig 18

Center-Front Waist Dart Position

© NIMI NOT TO BE REPUBLISHED

Dart manipulation techniques

Dart manipulation is one of the most important techniques when it comes to pattern drafting. Fashion designer must identify the location of the dart before manipulating the pattern and how manipulate the dart. Dart manipulation mainly starts with a basic slope, which they then convert into their stylish designs. Darts become princess seams, gathers, tucks or cowls. New styles lines are added or moved, necklines are reshaped.

1 Slash-spread transfer and overlap technique

2 Pin and pivotal dart transfer technique.

3 Dart equivalent technique

1 **Slash-spread dart rotation and overlap technique**: Pattern graders use the slide motion to change pattern sizes. They slide patterns up, down, and to the side to gradually increase or decrease from one size to the next. Use this sliding motion to add or subtract length. (Fig 19)

Fig 19

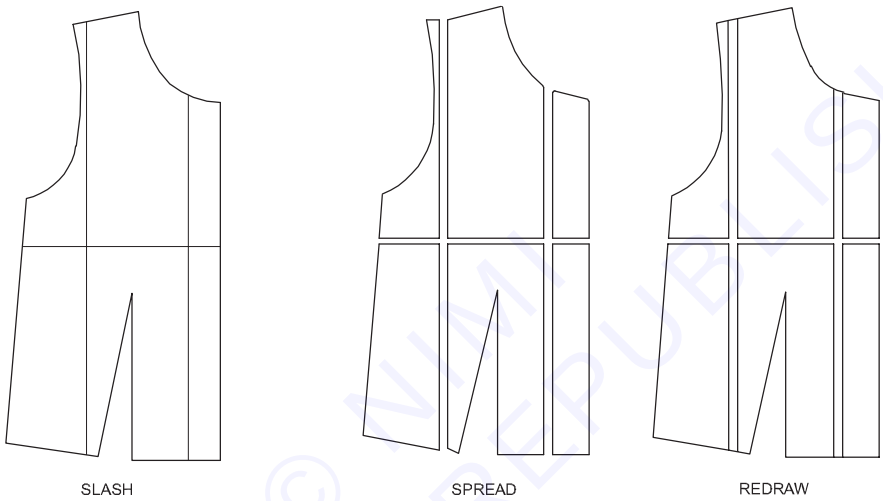

2 **Pin and Pivotal dart rotation technique:** Pattern designers use pivoting methods to make fashion changes. They move darts or add fullness by anchoring the basic pattern with a pin and moving the pattern in, out, and around. (Fig 20).

Fig 20

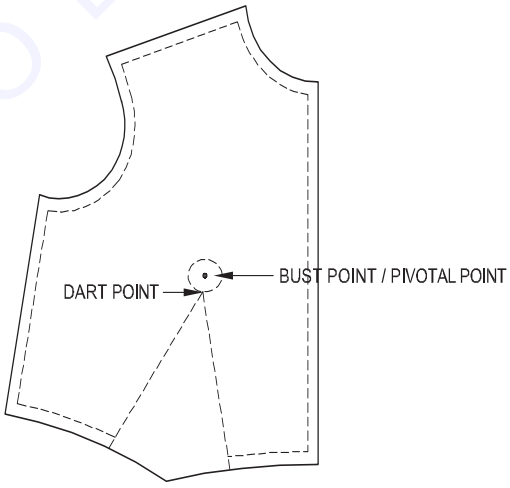

The pattern swings back and forth like the pendulum on a grandfather clock. Use this pivoting motion to change the pattern width.

3 **Dart equivalents technique:** Pleats or gathers in the fabric can be used as for the same purpose as a normal stitched dart. These are called dart equivalents. Darts can also be worked into style lines.(Fig 21)

© NIMI NOT TO BE REPUBLISHED

Fig 21

The dart excess can be used to create a wide variety of other design features such as, style lines, multiple, tucks, gathers, pleats, flare and even cowls. Essentially, the dart or its equivalent is always present somewhere in the pattern.

Slash and Spread Vs. Pivot Method

Typically, any one new to pattern drafting and experimenting with dart manipulation would start by using the slash and spread method in pattern making.

It is an easier – though longer – process that works well and allows less room for error, as you are working directly with the existing pattern pieces.

Pivoting a pattern is a more advanced pattern drafting technique as there is more room for error.

Introduction of Traditional Textile and Embroidery

Objectives: At the end of this lesson, you shall be able to:

- about traditional textiles
- fabrics used in traditional indian textiles
- about various traditional embroideries and
- classification of traditional embroideries.

Introduction of traditional textile

India has been well known for textile since very ancient times. The origin of Indian textiles can be traced to the Indus valley civilization as early as 5th millennium BC. The people of that civilization used homespun cotton for weaving their garments and used indigo to color their fabric. Textile has always played an important in trade and business here in India. Rome, China and Egypt everywhere traces have been found of Indian textiles.

Definition of traditional textile

The textiles which carry a rich history and cultural value are called traditional textiles.

The most popular fabrics used in traditional Indian textiles

1 **Khadi:** Hand spun and hand woven, natural material that suits all Indian climates.Khadi naturally hand woven fabric. Widely used in India, Pakistan, and Bangladesh.Commonly Khadi is woven with cotton and also uses silk and wool which are spun on a charkha. It has a versatile property cool in summers and warm in winters. Khadi is being promoted in India by the Khadi and village industries commission and the ministry of micro, small, and medium enterprises.

© NIMI NOT TO BE REPUBLISHED

- **History:** Khadi was introduced to the people of undivided India in 1918 in order to achieve self-sufficiency and independence from British textiles. Khadi movement, a socio-cultural narrative, was launched by Gandhi from the Satyagraha Ashram in May 1915, popularly known as the Sabarmati Ashram, in the Ahmadabad district, Gujarat. Derived from the term khaddar, khadi is a handspun and hand-woven cotton cloth, which became one of the symbols of India's freedom struggle. Mahatma Gandhi is said to have coined the term khadi for these fabrics owing to their coarse texture. Khadi is spun using a charkha or an Indian spinning wheel. The charkha also became a prominent icon on the Indian national flag designed in the 1930s.

2 **Pashmina:** From Kashmir, pashmina is a fabric made of the finest goat wool and embroidered by hand. Pashmina is expensive because of the delicate wool and arduous embellishments.

Pashmina is the art of handcrafting luxury wraps and apparel from Cashmere wool which grows on the undercoat of a rare goat species in Ladakh. The luxury wraps and accessories produced from this fine and soft raw wool take from a few months to some years to complete, be it a Pashmina shawl, scarf, or fabric. Cashmere is acquired from Ladakh, but its entire processing takes place in Kashmir. From cleaning the raw wool to spinning and weaving, finishing and embroidery, all expertise is indigenous to Kashmir

- **History:** Samples of wool fibers discovered from corroded copper artifacts from Harappa dating back to the Indus Valley Civilisation are extremely fine and resemble Pashmin and Shahtoosh. The material gained prominence through its use in the Kashmir shawl. In 1526, Babur (1483–1530) founded the Mughal Empire in India, and established the practice of giving khalat or "robes of honor", typically made of expensive fabric, to members of their durbar to indicate high service, great achievement, or royal favor. In his time, the Mughal khalat was a set of clothes, which could include a turban, long coat, gown, fitted jacket, sash, shawl, trousers, shirt, and scarf

3 **Mysore Silk:** Mysore silk of Karnataka, with narrow zari borders, is known for its simple, minimalistic look. Mysore Silk is variety of mulberry silk produced in the Indian district of Mysore, Karnataka. Mysore silk saris are famous for their quality silk and beautiful patterns. They are a symbol of India's rich cultural heritage and are worn by women across the country and the world. Mysore silk saris are meticulously hand woven by skilled artisans, employing traditional techniques passed down through generations. The intricate weaving process demands precision and expertise, resulting in a masterpiece that exudes unmatched quality.

- **History:** In the early 20th century, the Maharaja of Mysore, NevadaKrishna raja Wadiyar, established the government silk weaving factory in the city of Mysore silk saris have undergone several transformations over the years, but still retain their elegance and glamour. Today, Mysore silk saris are famous for their quality silk and beautiful patterns. They are a symbol of India's rich cultural heritage and are worn by women across the country and the world.

4 **Paithani:** From Aurangabad, Maharashtra, Paithani uses zari on silk. Birds like peacocks and other floral motifs are common on Paithani fabric borders.Paithani is characterized by borders of an oblique square design, and a padar with a peacock design.[2] Plain as well as spotted designs are available. Among other varieties, single colored and kaleidoscope-colored designs are also popular. The kaleidoscopic effect is achieved by using one color for weaving lengthwise and another for weaving width wise.

- **History:**The history of Paithani saris can be traced back to 2nd century BC in Satvahana Dynasty, at that time the paithani was made with pure gold wire with cotton and silk. The greeko Romans were very fond of this paithani sari 2000 years ago. They use to exchange gold for this luxurious Paithani sari. At that time this paithani was only worn by royals. Paithani was also known as "Pratishthani" as it was originated in the ancient city of Pratishthan now known as Paithan. Paithani also has the traces in many ancient Hindu and Buddhist texts. Paithani is also known as "Dev vastra"(fabric of God). Paithani has a very rich history of 2500 years but still many of us are unaware. Historians have noted fine Paithani saris with delicate gold and silver thread-work being sold in Greece in exchange for gold between 200 and 400 BC.

5 **Kinnauri Shawls:** Kulu, Himachal Pradesh, is home to Kinnauri shawls woven from wool. Weavers use five colors of threads to symbolize the five elements of nature to embroider the shawl.

The city of Srinagar in Kashmir is particularly renowned for its Pashmina shawls, which are prized for their softness, warmth, and intricate designs. Kashmir is famous for Pashmina shawls because of the region's unique climate, geography, and cultural heritage.

- **Motif:** The colors used for ground are white, black, natural grey and brown. The main colors used for patterning are red, orange, pink, blue, and green, yellow, black and white.

- **History:** Kinnaur remains cut-off from surrounding valleys during its long snowy winters. Weaving is a way of life with Kinnaris. the "Silk Road"' is by far the most famous network of trade routes connecting China, Central Asia, and India, there are other significant, ancient trade routes between these regions of which many may not be aware. One such trade route, known informally as the "wool road", connected the plains of the Punjab in India to Tibet, Central Asia and China. Two groups of artisans that can be found along this important route are the weavers of Kullu and Kinnaur. This is where the interesting twist to Kinnaur's folk history lies. Hinduism evolved there a few hundred years before Buddhism. Kinnaris are not villagers, they have always considered themselves to be a tribe and find a mutual sense of belonging there.

6 **Jamdani:**Word meaning of Bengal's Jamdani is flower vase, and it was patronized by the Mughals. This fine muslin textile is woven with cotton and gold threads.Jamdani is derived from the Persian word "jam" (meaning floral) and 'Dani' that is a vase or container named after decorative floral patterns found in Dhakai Muslin.Jamdani weaving involves a labor-intensive process characterized by the use of a supplementary weft technique. Skilled weavers meticulously intertwine the supplementary weft threads with the warp threads, creating intricate patterns and motifs on the fabric. Traditional Jamdani designs include delicate floral patterns, geometric shapes, and motifs inspired by nature, such as leaves and vines.

- **History of Jamdani:** Jamdani weaving has a rich and fascinating history that dates back centuries. Originating in the Bengal region, particularly in present-day Bangladesh and parts of West Bengal, India, Jamdani has evolved into a cherished weaving technique renowned for its intricate designs and delicate craftsmanship.

7 **Bandhani**

Bandhani, derived from the word 'bandha' which means to tie, are tie-dyed textiles primarily from Rajasthan and Gujarat. Tie-dye is a resist dyeing technique in which pre-determined areas on the fabric are tied tightly with thread to protect them from the color, followed by dyeing and removal of threads to reveal an interesting pattern on fabric.

The earliest reference to bandhani dates back to 6th-7th century AD at the Ajanta cave paintings that portray women wearing bodices with resist dyed designs. There is a literary reference to bandhani textiles in Harshacharita written by Banabhatta in 7th century AD. The biography quotes the wedding of King Harsha's sister, Rajyashri and details the tie-dyeing of the bride's odhani.

The word 'chunari' is a commonly used term that refers to patterns created by fine tie-dyed dots. Since the resist dyeing is done on head-cloths, chunari is also the name of the garment worn by women in Rajasthan.

The basic steps of creating a bandhani textile are as follows:

- **Pre-preparation of fabric:** The fabric generally used for tie and dye is finer variety of cotton and silk, so that dye can penetrate deep into the layers of tied fabrics. It is soaked in water overnight and washed thoroughly to remove the starch in order to improve its dye uptake. The fabric is bleached by drying it in the sun.
- **Tracing of design:** The fabric is folded into four or more layers for convenience of tying as well as to achieve symmetry in design. The design layout is marked on the folded fabric with wooden blocks, dipped in washable colors like Neel or geru.
- **Tying of fabric:** As per the design, the folded fabric is raised with a pointed metal nail worn over the finger. A cotton thread coated with wax is wrapped tightly around the raised area to create a simple fine dot: bundi or bindi, which is the basic motif of the design.
- **Dyeing of fabric in the lightest color:** After tying, the fabric is dyed in the lightest color first from the selected color scheme. After dyeing, fabric is washed, rinsed and dried.
- **Renewal of tying and dyeing in next-darker color:** Parts of the fabric to be retained in the lighter color are covered with tying and then the fabric is dyed in the next darker color. The Process of re-tying and dyeing is continued till the darkest color in the scheme is applied.
- **Washing:** Following the final dyeing, the textile is washed to remove excess dye and starched.
- **Opening the ties:** The ties of the tie-dyed fabric are kept tied till purchased by a consumer in order to differentiate between a bandhani textile and a printed imitation. Only a portion of the bandhani textile is opened to display the color scheme to the customer. To unravel the ties, the bandhani textile is stretched crosswise to open all ties at the same time.

© NIMI NOT TO BE REPUBLISHED

The tie-dye in India can be categorized according to region into Bandhani of Gujarat and Bandhej and Leheriya of Rajasthan.

8 Bandhani of Gujarat

The tie-dye from Gujarat called Bandhani is regarded for its fine resist dots and intricate designs. Traditionally the tie-dye is done on silk, cotton and wool. The motifs created by outlining with tiny dots are animal and human figures, flowers, plants and trees. The products range varies from odhanis, saris, shawls to stitched garments like kurta and skirts.

The major centres of bandhani in Gujarat are Jamnagar, Bhavnagar, Rajkot and Porbandar.

- **Special Bandhani Textiles from Gujarat Gharcholu:** A popular bandhani textile produced in Gujarat is called gharchola or gharcholu, a traditional odhani for Hindu brides, which is nowadays available as a sari worn on auspicious occasions. The tie-dyed textile in cotton or silk is red in color and the layout is a checkerboard created with woven gold threads. Each square within the check contains a different tie-dyed motif like dancing lady, parrot, elephant, peacock, flowering shrub and geometric forms.

9 Ikat

The term 'ikat' is derived from the Malay-Indonesian word 'mangikat' that means to bind or not. It is a yarn resist technique wherein the yarns are tie-dyed, and on weaving a pattern is created on the surface of the fabric. An ikat textile can be identified from the typical hazy patterning on fabric due to the resist dyeing of the yarns prior to weaving.

Ikat can be classified into three categories:

- **Single ikat:** There are two kinds of single ikat namely warp ikat and weft ikat. As the name suggests, in warp ikat, the warp yarns are tie-dyed and woven with plain solid colored weft yarns and similarly and in weft ikat, the weft yarns are tie-dyed and woven with plain warp yarns.
- **Double ikat:** In double ikat, both warp and weft yarns are tie-dyed according to a pre-determined pattern and then woven to create clear designs on fabric.
- **Combined ikat:** In combined ikat, both warp and weft yarns are tie dyed but they are present in selected areas of a textile, to create interesting patterns.

The earliest reference to ikat can be found in the Ajanta cave paintings of the 6th century AD. Designs similar to ikat are seen on the dresses of the females portrayed in the murals of Ajanta. There is a mention of double ikat in the couplets of Rani Ranakdevi, Gujarati literature from 11th century AD as well as in the records of European travelers from 16th century AD

The ikat textiles of India can be classified into three categories on the basis of region as follows:

- Patola of Gujarat
- Bandhas of Odisha
- Ikat textiles of Andhra Pradesh: Telia Rumal and Pochampalli

Patola of Gujarat

The double ikat weaving tradition of Gujarat is called 'Patola'. The textile is produced by the weavers of the Salvi community using expensive silk yarns. In the past, Patolas were manufactured in Patan, Khambat, Surat, Porbander, Ahmedabad and Baroda in Gujarat. However with the passage of time, there are only two families in Patan who continue to practice this craft.

The earliest reference to Patola can be visually seen in the Ajanta cave murals of 6th century AD. During the 16th and 17th century, Patolas were regarded as precious silks by South-east Asia and Europe, and thus became an important trade item at that time.

Patola textiles use intense colors like bright red, golden yellow, green, dark blue, reddish brown etc. The distinctive Patola motifs are flowers, jewels, elephants, birds and dancing women for the Hindu and Jain communities. The Muslim community restricts themselves to abstract designs. The Patola designs are named as Kunjar Popat Bhat (Elephant – Parrot), Nari Kunjar Popat Bhat (Lady – Elephant – Parrot), Navratan Bhat (Jewel Mosaic), Phool Wali Bhat (Floral), Chabri Bhat (Basket of Flowers) etc.

© NIMI NOT TO BE REPUBLISHED

Bandhas of Odisha

The ikat textiles called 'bandhas' are produced in Odisha. Mostly, bandhas are single ikats or combined ikats, woven by specific weaver groups like Mehars and Patras. Cotton and silk ikats are manufactured in Cuttack, Nuapatna, Sonepur, Bargarh and Sambalpur.

The bandhas of Odisha are characterized by curved forms with hazy outlines. The distinct hazy lines are created since only one set of yarns in the fabric are tie-dyed. Mainly weft ikat is done in Odisha. Some popular motifs are shankha or conch shell, swastika, creepers, flowers like lotus, intertwined snake, fish, tortoise and elephant.

The bandha weavers of Odisha are known for the usage of striking color combinations and delicate intricate patterns. The ikat saris of Odisha are the popular attire of the local women, and are also preferred by the modern women of India. Besides the cotton and silk ikat saris, the other products woven by the weavers are yardage, stoles, scarves and dupattas.

10 Bagru prints

- **Region:** Bagru is a small village in Rajasthan, which is known for its mud-resist block prints.
- **Technique:** In Bagru, the printer first processes the raw material which is mainly cotton. Other natural fabrics are silk, cotton and silk blends etc. The fabric is then printed with mordants in paste form. The printing is done by using outline and filling blocks. The prints are then covered with a resisting paste 'dabu' made of clay and gum. It is then dried and dyed in vegetable dye. The mud resist paste is used to resist the penetration of dyes, mainly vegetable dyes on cotton fabric as per the design. After dyeing the fabric is thoroughly washed at the river. The mud resist paste is washed off exposing printed motifs on white background surrounded by the base color. Hence, the resulting effect of dark and deep background with light colored prints is achieved by resisting and mordanting.

Motifs: The motifs are inspired by the 17th century Persian motifs and are classified into the following five categories:

- Single motifs like flowers, leaves and buds. Some examples are suraj ka phool, chakri, anguthi, gende ka phool.
- Entwined tendrils that include all over jaal of leaves, flowers and buds.
- Trellis patterns include jaalis from the Mughul period.
- Figurative designs that include animal and human figures such as elephant, deer, lion, peacock, dancing women, warrior men etc.
- Geometric designs include waves (lehariya), chess (chaupad), Fortress wall projections (kangura), lines (dhariya), dots (bindi) etc.
- **End Use:** The brightly colored block printed fabrics from Bagru are used for apparel as well as home furnishings such as quilts, bedspreads, cushions and curtains.

11 **Kalamkari**

Andhra Pradesh is famous for many of its textile crafts, one of which is Kalamkari, which means 'pen-craft'. This style of printing was practiced in coastal Deccan and many other places Kalamkari, the dye painted and printed exquisite textile symbolically named after the technique of its making, 'kalam/qualam' meaning pen and 'kari' meaning art, has been prevalent in several parts of southern India since ancient times. Referred to as 'Chintz' by the English and 'Pintadoes' by the Portuguese, Kalamkari was patronized by both Mughals and later by the Europeans in India.

Kalamkari fabrics were believed to brighten up with each subsequent wash. The specially prepared cotton fabric was hand drawn with a special pen using mordants as ink. These fabrics were then dyed in natural dyes.

The fabrics printed at Masulipatnam were used as furnishings such as bedspreads, curtains, table cloths etc apart from apparel. In fact these fabrics were so popular in the West, that these were banned by France and England, as it was a threat to their domestic printed fabric industry. These fabrics were also referred to as 'Palampores'.

- **Region:** Srikalahasti, Masulipatnam, Polavaram and Pedana in Andhra Pradesh have been the major centres of this craft.
- **Tools:** The main tool used in Kalamkari is an improvised brush known as 'kalam'. It is made of bamboo stick which has a pointed edge like a pen. Near the tip, a ball of wool or felt is tied. Whenever the kalam is dipped in dye, the ball of wool absorbs the dye which is pressed while drawing. This maintains constant flow of the dye to the tip for continuous drawing

© NIMI NOT TO BE REPUBLISHED

- **Technique:** The first step involves preparation of grey cloth which is achieved by soaking the cotton fabric in water for an hour and consequent washing so as to remove the starch which is followed by drying. Next, the fabric is treated with myrobolan solution which gives the cloth a light yellow tone.

The outlining of the main theme and figures are then drawn by using ferrous acetate solution prepared by fermenting iron scrap with jaggery. This solution gives black color. Alum solution is prepared by dissolving alum in water. This is applied wherever red is desired. Combination of blocks and hand painting using 'kalam' makes Kalamkari fabrics desirable for consumers. The fabric is then dyed with alizarine. The areas painted with ferrous solution turn jet black and the ones painted with alum become bright rust red.

- **Style and Motifs:** The art of Kalamkari under the patronage of Mughals in Coromandal and Golconda provinces branched out into two schools. Masulipatnam under the Golconda province catered to the Mughal tastes with its Persian influence according to Islamic aesthetics. The prints from this region were characterized by intricate motifs and forms including the tree of life, 'mehrab' pattern, 'jaals', creeper and stylized peacocks.
- **Colors:** Blue, ochre yellow, red and black are the main colors used in Kalamkari.
- Blue is associated with Lord Krishna and also other Gods.
- Yellow is used to show female bodies and also gold ornaments in deeper ochre shade.
- Green color is used to depict Lord Hanuman
- Red color depicts demons and bad characters.
- **End Use:** The fabrics printed at Masulipatnam are used as furnishings such as bedspreads, curtains, table cloths etc apart from apparel like kurtas, saris and dupattas.

12 **Banaras brocade sari**

- **Region:** Banarasi brocade saris are from Varanasi/Banaras, a small town in the state of Uttar Pradesh. The holy city of Banaras, on the banks of river Ganga, is considered to be the oldest city in the world. The brocaded fabrics from Banaras are considered to be one of the finest saris in India and are known for their gold and silver brocade or 'zari'. These saris are made of finely woven silk, decorated with intricate design.
- **Technique:** The designs are produced by warp and weft threads of different colors and materials, suitably woven. Extra warp/weft or both are woven into the fabric. Pattern is woven with or without attachments like jacquard or dobby attachment or by jala weaving. It can be silk on silk, cotton on cotton, silk on cotton, zari on silk. The brocade designs are made with extra yarns other than the ground threads. When these extra yarns are picked from selvedge to the other end, the yarns appear on the face of the fabric in the design portion and as floats on the back of the fabric in the remaining portion. A very special technique often seen in Banaras is the 'Minakari'.

Motifs: The most commonly used motifs are:

- Chrysanthemum buta
- Keri (paisley) buta
- Ganga jamuni style (half gold and half silver zari)
- Ari jhari (diagonal stripes)
- Latifa buta

The designs are extremely fine and delicate. They have a strong Mughal influence. Motifs like intertwining floral and foliage (Jaal), paisley in a creeper (Kalka bel) and hunting scene (shikargah pattern) are often seen.

- **End Use:** These textiles were popular items of export to European countries. Traditionally, banarasi brocades were used during Mughal period as fabrics for royal coats, achkans and jamas. Courts and palaces were adorned with brocade curtains, fabric fans, bolsters and foot stools, upholstered with brocades. Brocade saris, dupattas and dress fabric were worn by women on special occasions, mainly on weddings and festivities.

13 Baluchari sari

- **Region:** Baluchari saris are beautiful ornate saris mainly produced in Murshidabad district of West Bengal. Baluchari sari is distinctly different from other saris of India, as it commemorates the Nawab and his wife by depicting them on the pallu of the sari.

NOT TO BE REPUBLISHED

- **Technique:** Making of the motifs for pallu and other part of Baluchari sari is an intricate process. Earlier, Baluchari saris were made on jala looms which were gradually replaced by the modern jacquard technique. Traditionally the motifs were woven on handlooms, using softly twisted extra weft yarns which used to give a plump, embroidered effect. Zari is not used for extra weft ornamentation .Now a days; jacquard attachment is used for weaving patterns on the sari. The design is drawn on a graph paper; it is colored and punched on the jacquard cards. After punching, these cards are put in order and fixed in the jacquard machine on top of the loom.

Motifs: The pallu of the Baluchari sari is special as it is divided into niches bordering a square or rectangular space in the center. In each of the niches, a human figure is depicted, normally a king smoking a hookah or a queen with a fan or smelling a flower. A row of three, five or seven ornate paisley (kalkas) is seen in the centre of the pallu, around which niches with human figures are woven.

The baluchari saris are often reckoned with the patterning of sun, moon, stars, mythical scenes and motifs of natural objects. The fields of the saris are embellished with small butis. Colors like maroon, blue, red and dull dark terracotta were used as the base color. Ornamentation of butidar Baluchari saris is done with extra weft motifs in off-white, white, yellow and dull orange colored yarn.

These saris were mostly worn by women from upper class and zamindar households in Bengal during festive occasions and weddings.

14 Jamdani Sari

- **Region:** The Jamdani saris are from West Bengal. These are sheer, delicate saris woven in Phulia, Nadia and Shantipur villages. These are made in combination of cotton with cotton, cotton with silk and silk with silk. Technique: The technique of interlocking the extra weft yarns for creating motifs in the fabric is used in Jamdani saris. These are woven on traditional handlooms.
- **Motifs:** Floral geometric creepers, paisleys and leeves are the most common motifs in the Jamdani saris.

Paithani Sari

- **Region:** Paithani saris are woven in Paithan and Yevla villages of Aurangabad in Maharashtra. Paithani saris are heavy silk saris which are preferred for wedding trousseau and festive wear.
- **Technique:** The intricate motifs are woven by interlock twill tapestry weaving technique on traditional handlooms.

Motifs: Bright jewel tones such as emerald green, ruby red and yellow colored silk yarns were used; however midnight blue colored saris were most preferred. The interlocking technique created geometric angular forms out of patterns which were floral, paisleys, parrots, peacocks and lotus flowers. The pallu used to have a broad band of zari. At present the pallu band is ornamented with lotuses and peacocks woven in very bright colors. Another motif seen on paithani saris is the bird (munia) motif. Paithani is coveted in India as a precious heirloom passing on from generation to generation. Exquisite silk from Paithani was exported to many countries and was traded in return for gold and precious stones.

15 Kanjeevaram Sari

- **Region:** Kanjeevaram saris hail from the town of Kanchipuram in Tamil Nadu. It is considered to be one of the most expensive saris in the world and thus used for all special occasions.
- **Technique:** The sari is woven in pure mulberry silk and gold zari on hand operated pit-looms. The colors most commonly used are mustard, deep green, maroon, aubergine, etc.
- **Motifs:** The motif imagery is drawn from the nature and forms of temple architecture. Some examples are peacock, parrot, rosary beads, bird's eye, kalash, mythical creatures, temple designs, and scenes from Ramayana, Mahabharata and Bhagwad Geeta etc.

16 Chanderi Saris

- **Region:** Chanderi, near Gwalior, in Madhya Pradesh is renowned for its woven saris appropriate for summer wear. The craft is practiced by MuslimA sari weavers.
- **Technique:** The sari is woven in a blend of cotton and degummed silk. It is diaphanous and is woven in pastel colors with small buties and a narrow gold border. The pallu generally has fine lines in zari yarn.

© NIMI NOT TO BE REPUBLISHED

The motifs are very simple. Some examples are gold coin (Sharif), mango, brick (event) and rosary beads (rudraksha) in the form of small buties.

Introduction of Traditional Embroideries

Embroidery or the art of needlework resulted from the passion of womenfolk to express their creativity and ornament their apparel and household textiles. Primarily a feminine art, young girls learned the craft from their mothers and older women in the family. The artistic expressions of the embroiderer are skillfully created on fabric with a simple tool, needle or a hook needle known as awl or tambour.

Classification of embroidery textile

The Indian embroideries can be classified on the basis of the technique of production or as per the region of production

1 Kashida

- **Region:** Kashida is an embroidery style from Kashmir that is practiced by men folk of the region. The intricate needlework is inspired from the charming natural surroundings of Kashmir.
- **Technique:** The base material for Kashida is cotton, wool or silk in a variety of colors like white, blue, yellow, purple, red, green and black. The embroidery threads used to execute Kashida are wool, silk or cotton depending on the product to be embroidered. The main stitches employed for Kashida are darning stitch, stem stitch, satin stitch and chain stitch.
- **Motifs:** The motifs used in Kashida depict the natural elements which includes the rich flora and fauna of the region of Kashmir. Typical motifs are birds like magpie, kingfisher; flowers, butterflies, maple leaves, almonds, cherries, grapes and plums. A popular motif seen on embroidered shawls is derived from the cypress cone. (Fig 1)

Fig 1

- **Style of Embroidery:** There are three styles of embroidery followed in Kashmir. Sozni is intricate embroidery that uses stitches like fly stitch, stem stitch and darning stitch. The aari style, also called Zalakdozi employs hook or aari to fill-in motifs with chain stitch. In Kashmiri couching, zari thread is laid on the fabric along a pattern and is held in place with another thread.
- **End Use:** Kashmiri embroidery is primarily done on shawls and regional garments like phiran. Chain stitch embroidery is done on woolen floor rugs called Gabbas and Namdas. Nowadays, Kashida is also used to decorate household items like bed covers, cushion covers, lampshades, bags and other accessories.

2 Phulkari

- **Region:** Phulkari is an embroidery style that originated in Punjab. It is used and embroidered in different parts of Punjab namely Jalandhar, Amritsar, Kapurthala, Hoshiarpur, Ludhiana, Ferozepur, Bhatinda and Patiala.

The earliest available article of phulkari embroidery is a rumal embroidered during 15th century by Bibi Nanaki, sister of Guru Nanak Dev. The needlework is widely practiced by the women of Punjab and holds significance in a life of a woman, from her marriage till her final abode to heaven.

- **Technique:** The base material to execute Phulkari is handspun and hand-woven Khaddar that is dyed in red, rust, brown, blue and darker shades. Soft untwisted silk thread 'Pat' is used forthe embroidery. The colors of the thread are red, green, golden yellow, orange, blue etc. The basic stitch employed for Phulkari is darning stitch, which is done from the reverse side of the fabric. The stitches follow the weave and a beautiful effect is created on the fabric by changing the direction of the stitches. For outlining of motifs and borders, stem, chain and herringbone stitches are sometimes used.
- **Motifs:** The motifs used in Phulkari are inspired by objects of everyday use like rolling pin, sword, flowers, vegetables, birds, animals etc. They are generally geometrical and stylized. Usually one motif is left unembroidered or is embroidered in an offbeat color. This motif is called 'nazarbuti' which is considered to ward off the evil eye. (Fig 2)

Fig 2

- **Style of Embroidery:** The two embroidery styles prevalent in Punjab are Bagh and Phulkari. Bagh is a fully embroidered wrap that is used for special occasions whereas Phulkari is simple and lightly embroidered for everyday use.
- **End Use:** Phulkari is an important part of the bridal trousseau and is worn as a veil or wrap by women on special occasions like Karva Chauth, a festival celebrated in North India for longevity of husbands. A specific pattern of Phulkari is also used as canopy on religious occasions. Presently, Phulkari is being done on bed linen and apparel like tops, tunics and skirts.

3 Chamba Rumal

- **Region:** Chamba Rumal, embroidery from Himachal Pradesh dates back to the 15th century. There is a mention of this embroidery being practiced in Pathankot, Chamba and other remote villages of Himachal Pradesh in Buddhist Literature and the Jataka Tales. Chamba was known for the most picturesque needle work, which the Romans described as 'needle painting'.
- **Technique:** The embroidery is executed on two types of unbleached cotton cloth: lightweight, delicate muslin or handspun, hand-woven, coarser khaddar. Untwisted, dyed silk threads 'Pat' in bright colors like red, yellow, green, blue, crimson and purple are used for the embroidery. The embroidery uses double satin stitch which simultaneously fills in the motif on both sides of the fabric, making it reversible.(Fig 3)
- **Motifs:** The motifs used are inspired from Pahari paintings depicting Lord Krishna and his playful antics. The embroidery also depicts the flora and fauna of the Himalayan region. Typical motifs include: tiger, goat, deer, horse, peacock, and parrot; flowers, shrubs and plants, willow and cypress trees; and musical instruments like sitar, table, veena, tanpura etc.
- **Style of Embroidery:** The embroidery is executed on a square piece of cloth. The motifs are arranged on the rumal in order to portray scenes from Lord Krishna's life. Some of the popular themes include Rasamandala, Rukmini Haran and Kaliya daman. There are floral borders on all four sides of the rumal
- **End Use:** Traditionally the rumal was used as a cover for food Prasad offered to gods and goddesses. It was also a custom to gift embroidered rumals at the time of weddings. Traditional Indian Now days, the Chamba embroidery is done on fabrics like silk, polyester or terrycot and made into blouses, caps, slippers, cushions covers etc. Embroidered silk wall hangings are also exported from Himachal Pradesh.

Fig 3

4 Embroidery from Gujarat

- **Region:** The embroidery of Gujarat is colorful and vibrant practiced by different communities of the state. The most popular embroidery styles originate from Kutch and Kathiawar region of Gujarat.
- **Technique:** The embroidery is done with multi-colored threads, usually cotton or silk embroidery threads. Different stitches are used depending on the style of embroidery, namely chain stitch, herringbone stitch, satin stitch, interlace stitch, buttonhole stitch and darning stitch. There is also use of mirrors that are fixed on the fabric with an embroidery stitch. Another technique used in Gujarat is appliqué where scraps of fabric are cut into a form and stitched onto the base fabric.
- **Motifs:** The motifs used in Gujarati embroidery are mostly taken from flora and fauna. Some typical motifs are flowers, creepers, trees, peacocks, parrots and elephants. Besides flowers and animals, human figures in different poses like dancing women and men are also seen in some styles of Gujarati embroidery. (Fig 4)

Fig 4

- **Style of Embroidery:** There is different embroidery styles carried out by tribal communities of Gujarat. Some of the styles are as follows:
- **Mochi Bharat:** The embroidery style from Kutch is practiced by the mochis of shoemakers. The ari or the hook is used to embroider designs with chain stitch.
- **Soof Bharat:** The embroidery is executed with untwisted silk floss and geometric patterns are created using the darning stitch.

- **Abhla Bharat:** The embroidery style is defined by the use of mirror work along with other embroidery stitches to create designs on fabric.
- **Moti Bharat:** The craft is characterized by the use of white and colored beads that are connected with thread to develop colorful motifs on a white background of beads.
- **Kachcho Bharat:** The embroidery uses interlace stitch called Sindhi taropa. The motifs aremainly geometrical comprising of squares, hexagons and lozenges.
- **End Use:** A range of embroidered articles are produced in various regions of Gujarat. Some examples are quilts, doorway hangings, pouches, bags, ghagra, choli, wedding costumes, animal trappings etc.

5 Parsi Embroidery

- **Region:** As the name suggests, the Parsi embroidery is practiced by the Parsi community living in Mumbai. They are believed to be descendants of Persian Zoroastrians, who migrated to India around the 8th century. The Parsi embroidery is an interesting mix of eastern and western cultures, imbibing from Persian, Chinese, Indian and European influences.
- **Technique:** The base material for Parsi embroidery is silk fabric in bright red, purple, blue, magenta and black color. The embroidery is done with silk threads in light pastel colors like off white, pink and cream. The basic stitch used in Parsi embroidery is satin stitch and its variations to fill-in motifs. Besides the satin stitch, French knots are used that imparts texture to the fabric, resembling small beads fixed on the fabric.
- **Motifs:** The motifs are derived from Persian, Chinese, Indian and European cultures. The range of motifs from nature includes flowers like chrysanthemum, peony, lily and lotus; foliage like cherry, weeping willow and pine; birds like crane and peacock, and butterflies. Other important motifs are inspired from Chinese architecture and portrayal of Chinese human figures and scenes from daily life.(Fig 5)

Fig 5

- **Style of Embroidery:** The Parsi gara is an embroidered sari that has heavily embellished borders on all its four sides.
- **End Use:** The Parsi embroidery is done on garas (sari) and jhablas. A time consuming embroidery, the richly embroidered Parsi garas are regarded as heirlooms. Though the embroidery is becoming extinct, attempts are being made to revive the craft and produce fast selling products like scarves, bags and other accessories.

6 Chikankari

- **Region:** Chikankari is white work embroidery practiced in Lucknow, Uttar Pradesh. It is believed that Nur Jahan, wife of Mughal emperor Jahangir embroidered a cap for her husband, and hence popularized this craft of white on white embroidery.
- **Technique:** The embroidery is done on fine white cotton fabric with untwisted white cotton or silk thread. There are three types of stitches used in chikankari: flat stitches like stem stitch and herringbone stitch, raised stitches like bullion and French knots and pulled thread work or jali.

- **Motifs:** The motifs are inspired from nature's flora including flowers, creepers and lace-like patterns.(Fig 6)

Fig 6

- **Style of Embroidery:** A common style present in each piece of Chikankari is the shadow work. To create the light and shade effect, herringbone stitch is executed from the wrong side of the fabric which creates shadow of lighter color on the right side and at the same imparts an outline to the motif.
- **End Use:** Traditionally the embroidery was done mainly for male garments such as kurta, bandi, choga etc. for summer wear.Presently Chikankari is being explored for apparel as well as home products on different fabrics like crepe silks, chiffons, georgettes and cotton polyester blends. Besides the traditional white on white embroidery, the contemporary chikankari has a wider color palette, from pastels to bright colors.

7 Zardozi

- **Region:** Zardozi, the gold and silver embroidery is practiced in Lucknow, Agra, Varanasi, Bareilly, Bhopal, Delhi and Chennai. The craft flourished under the patronage of the Mughal courts.
- **Technique:** The embroidery is done on different fabrics like velvet, satin and silk with a variety of zari threads and materials like badla (the untwisted wire), salma (stiff finely twisted circular wire) gijai (twisted metallic wire), dabka (zig-zag coiled wire), sitara (small circular disc), pearls and colored beads. The different stitches used in Zardozi are chain stitch, stem stitch and satin stitch. The fabric to be embroidered is first stretched on a rectangular wooden frame supported on two tripods called a karchob. A hook or an awl is used to execute the embroidery.
- **Motifs:** The motifs used are mainly floral and geometrical. Some popular motifs are creepers, flowering bush, floral scrolls and intricate jali patterns.(Fig 7)
- **Style of Embroidery:** There are two embroidery styles namely Karchobi and Kamdani under Zardozi. In Karchobi, the fabric is clamped on wooden frame and elaborately embroidered to create decorative home furnishings and ornate apparel. Kamdani is lighter embroidery done on apparel like dupattas and scarves without clamping the fabric on any frame.
- **End Use:** Zardozi was traditionally done to ornament wall hangings, bedcovers, cushion covers, curtains, palanquin covers, trappings for elephants, bullocks and horses, canopies, shoes, jackets, purses, boxes etc. The embroidery continues to be one of the most favoured ornamentation for decoration of apparel such as lehenga choli, sari etc. Presently, Zardozi is also explored on different types of base material like jute to develop trendy products like bags and decorative fashion accessories.

8 Kasuti

- **Region:** Kasuti embroidery is practiced in Karnataka. The embroidery considered as an auspicious craft, is executed by women. In ancient times, every bride would own a black silk sari, Chandrakali sari, with Kasuti embroidery done on it.

NOT TO BE REPUBLISHED © NIMI

- **Technique:** The embroidery is done on hand-woven cloth of darker color usually black with cotton threads in different colors like red, orange, purple, green, yellow and blue. Four basic stitches are used: Gavanti, double running stitch that creates the same effect on both sides of fabric; Murgi, zig-zag running stitch that works in stepwise manner; Negi, simple running stitch that produces a weave-like effect, and Menthi, cross stitch that gives a heavier appearance. The embroidery threads used are drawn from the old silk sari borders.
- **Motifs:** The motifs are inspired from religion, architecture, flora and fauna, and objects of daily use. Some examples are star shaped designs, chariot and palanquin for deity, tulsi pot holder, cradle, sacred bull, deer, elephant, peacock, horse and lotus.(Fig 8)

Fig 7

Fig 8

colored fabric base using contemporary motifs. The product range includes stoles, dupattas, saris and suit materials.

11 Sujani

- **Region:** Sujani is an embroidery style practiced in parts of Bihar, namely Muzaffarpur, Bhusra, Madhubani and Patna. Similar to Kantha, the embroidery was traditionally done on layers of old saris and converted into a quilt. In the past, Sujanis or embroidered quilts were made on the arrival of a newborn.

- **Style of Embroidery:** The embroidery uses a combination of horizontal, vertical and diagonal stitches. The motifs are not traced on the fabric and the embroidery is executed by counting the yarns on the base material.
- **End Use:** Traditionally the embroidery was done on Ilkal sari and other apparel items like women's blouse and children's bonnets. Presently Kasuti embroidery is also done on home products like cushion covers, bedcovers, curtains and accessories like handbags, mobile pouches, belts etc.

9 Lambadi Embroidery

- **Region:** Lambadi embroidery is practiced by the Lambadas or Lambanis, the Banaras of Bellary and Bijapur in Karnataka and Hyderabad in Andhra Pradesh. The colorful embroidery was done by the women to decorate their costumes namely phetia or skirt and kinchella or blouse.(Fig 9)

Fig 9

- **Technique:** The embroidery is done on hand-woven cloth in dark blue or red color. The embroidery is done with colorful threads using basic stitches like herringbone stitch, chevron stitch, cross stitch and running stitch, combined with appliqué. The embroidery is further embellished with mirrors, cowries' shells, beads, coins and silver trinkets.
- **Motifs:** The motifs are mainly geometrical with grid like patterns. Style of Embroidery: The embroidery uses a combination of stitches and appliqué, along with mirror work and other embellishments like cowries' shells and coins.
- **End Use:** In the past, Lambani women embroidered their garments and other utility products like pouches and bags. Nowadays, the embroidery is done on a variety of products like cushion covers, bedcovers, wall hangings, garments and accessories like bags, headbands, waist belts etc.

10 Kantha

- **Region:** Kantha is an embroidery style that originated in West Bengal. In the past, it was used to transform old, used fabric into an embroidered textile.
- **Technique:** The embroidery is executed on layers of old white cotton saris that are stitched together with simple running stitch in white thread. The motifs are traced and embroidered using different colored threads. The embroidery threads used are drawn from the old sari borders. The basic stitch used is running stitch along with satin stitch and chain stitch.
- **Motifs:** The motifs used in Kantha are lotus flowers, floral scrolls, tree of life, creepers; animal and bird forms; fish, sea-monsters, mermaids, ships, submarine scenes; domestic articles like mirrors, pitcher, nut cracker, umbrella, musical instruments and human figures like gods and goddesses, horse man, fisherwoman etc. (Fig 10)
- **Style of Embroidery:** Different embroidery layouts are followed in Kantha. Some examples are: A central motif and tree of life on all four corners, motifs arranged in panels or a big central panel and smaller motifs placed around.
- **End Use:** Kanthas were mainly used as quilts and also offered to special guests to sit or sleep on it. It was presented to the bride and groom as well as used to wrap valuables and gifts. Other uses of Kantha include bags for keeping money and book cover. Nowadays, Kantha embroidery is done on single layer of white or

- **Technique:** The embroidery is carried out on layers of old white cotton saris that are stitched together with simple running stitch in white thread. The motifs are filled-in with rows of running stitch in colored threads drawn from the old sari borders. The outlines of the motifs are defined with chain stitch.(Fig 11)

Fig 10

Fig 11

- **Motifs:** The motifs used in Sujani are drawn from daily life and the natural surroundings. Some examples are flowers, plants, elephants, birds, fishes, gods and goddesses. The contemporary Sujanis are also portraying social concerns like female foeticide, women empowerment, girl child education and domestic violence.
- **Style of Embroidery:** The embroidery layout is such that each piece of Sujani tells a story. The motifs are simpler and bolder in comparison to the Kantha embroidery.
- **End Use:** Traditionally Sujanis were used as baby wraps. Presently the women artisans are doing sujani embroidery on different products like bed covers, cushion covers, wall panels, stoles, dupattas and fashion accessories.Dus arit quis elibus magnatem et aut reria cum serrovi duciand isquis qui vel endit, aliqui ide

Introduction to CAD (pattern making) in apparel

- Introduction to the Trade
- Role of computer in garment industry
- Introduction to CAD (Pattern Making) in Apparel
- Pattern Drafting, Layout planning (marker making), Grading, Digitizing.

Introduction to the Trade

Fashion design and technology is an interdisciplinary field that combines creative design with technical skill to develop innovative clothing and accessories.it involves understanding fashion trends, materials, garment construction technique and process fashion designer in this field often utilize software for design, pattern making and digital prototyping alongside traditional technique. The trade encompasses a wide range of roles, from designing haute couture to creating ready to wear collection, and it plays a significant role in shaping the global fashion industry.

Role of Computer in Garment Industry: Computer has influenced every sphere of human life. Life has become easier and comfortable with the use of computer.In the field of garment industry computers help to design, analyses and manufacture the product within a short span of time. The first step of garment production is designing. The designers do hand sketches or drape fabric in a dress form. CAD software has begun to make inroads into the world of fashion and textile industry, enable mass customization, develop more designs and facilitate to make frequent changes in stylus and production. Computer added designing software not only provides the possibility to speed up the process of putting a new model into production and improve the quality of the product, but also reduces material cost and labor intensity.

Types of CAD systems

- Textile design system
- Knitted fabrics
- Printed fabrics
- Illustration Sketchpad systems
- Embroidery systems

Textile design systems

Woven textiles are used by designers and merchandisers for fabrics for home furnishing and to men- women-children wear. Most fabrics whether yarn dyes, plain weaves, Jacquard or dobbins can be designed and in fact are invariably used abroad using a CAD system for textiles. Similarly embroideries are also developed at CAD workstations.(Fig 1)

Fig 1

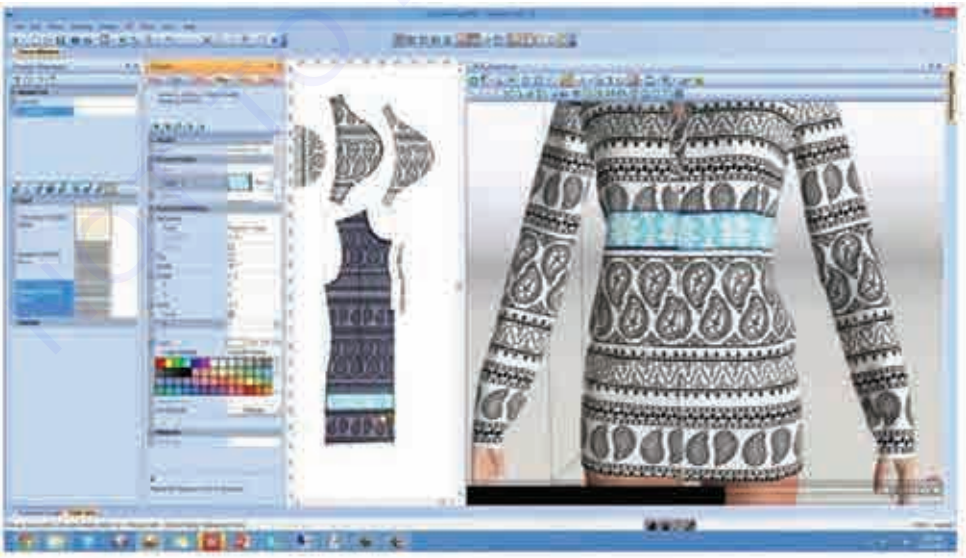

Knitted fabrics

Some systems specialize in knitwear production and final knitted design can be viewed on screen with indication of all stitch formation. For instance a CAD program me will produce a pullover graph that will indicate information

© NIMI NOT TO BE REPUBLISHED

on amount of yarn needed by color for each piece. Another example of the new technology in the industries using a yarn scanner, which is attached to the computer, scans a thousand meters of yarn and then simulates knitted/ woven fabric on -screen. This simulation will show how the fabric will look like if woven from that yarn.(Fig 2)

Fig 2

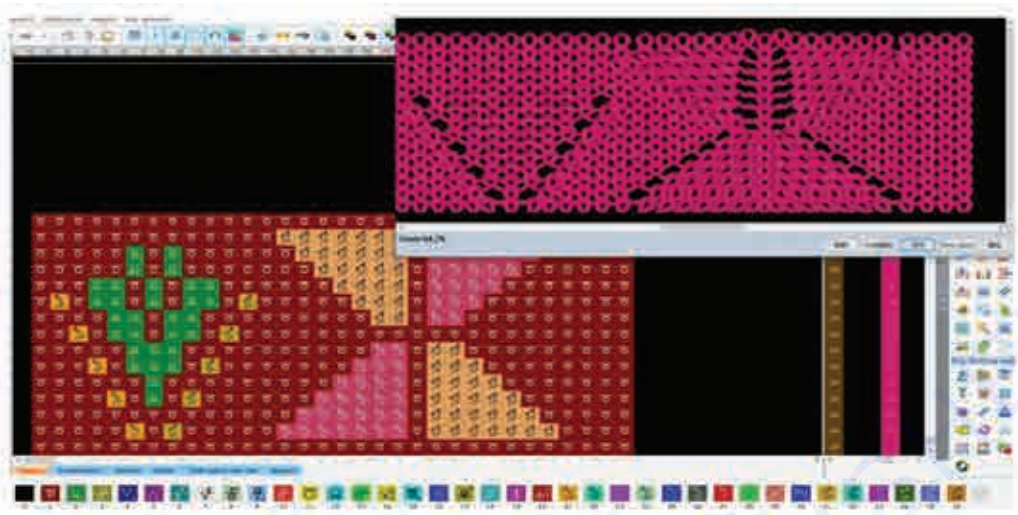

Printed fabrics

The process involves use of computers in design, development and manipulation of motif. The motif can then be re-sized, recolored, rotated or multiplied depending on the designer's goal .The textile design system can show color ways in an instant rather than taking hours needed for hand painting. New systems are coming which have built-in software to match swatch color to screen color to printed color automatically i.e. what you see is what you get.(Fig 3)

Fig 3

Illustration /sketch Pad Systems

These are graphic programmer that allow the designer to use pen or stylus on electronic pad or tablet thereby creating freehand images, which are then stored in the computer. The end product is no different from those sketches made on paper with pencil. Different knit and weave simulations can be stored in a library and imposed over these sketches to show texture and dimensions.(Fig 4)

Embroidery system

The designs used for embroidery can be in corporate on the fabric for making garment. For this, special computerized embroidery machines are used. Designers can create their embroidery designs or motif straight on the computer. All they need to do is design, colour and stitch to different parts of the design.(Fig 5)

Fig 4

Fig 5

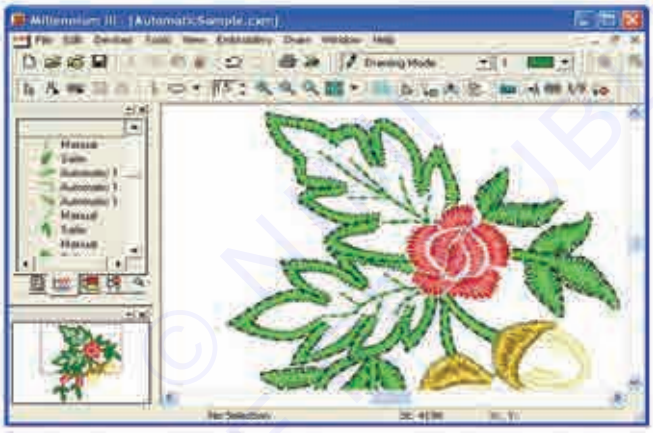

Introduction to CAD (Pattern Making) in apparel

CAD stands for Computer aided Design. CAD is the use of computer technology for the process of design development and collection development in fashion. It reduces the requirement of manual sketching, which is very crucial for the fashion sketches, flat drawing. Pattern making development and marker planning and many other fashion designing related aspects.

A fashion designer needs to know about CAD to save the time and reduce the possibility of error. In short, CAD /CAM in fashion industry is a computer technology to create sketches and other designs used to create clothes, accessories, shoes, intimate apparel and more. Computer aided designs, CAD in fashion industry help to create sketches, prototypes and designs of garments, CAD is essentially an automated system for the design, drafting, and display of graphically oriented information and also used in the manufacturing process for the layouts. It makes the work easier through efficient use of software. Following tasks are done using CAD in pattern making.

- Pattern Drafting
- Layout Planning(Marker Making)
- Grading

Pattern Drafting:

The software used for pattern making is CAD. CAD is becoming more and more powerful these days and is essential software in Garment Export Houseand a large scale apparel business.A CAD system is used for pattern making. CAD software helps garment manufacturers to maximize the productivity and accuracy in creating patterns. This short term introductory program me in apparel Pattern Making With CAD trains fashion professionals with a wide range of skills from conventional pattern making techniques to the introduction of advanced digital tools. Students acquire the basis of how to create new models, pattern placement techniques and to create basic prototypes and samples.(Fig 6)

Fig 6

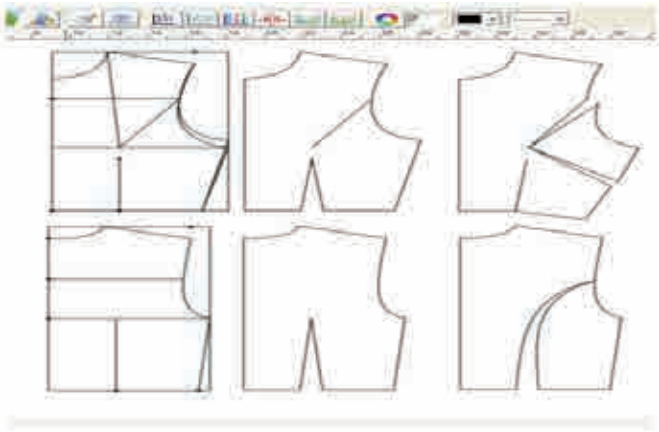

- Digitizing

Layout Planning (Marker making)

Computerized marker making systems helps in laying the pattern part together more economically than an operator could hands. This ensures minimum wastage of fabric. On plain fabric this is relatively simple, but on striped fabric also automatic matching is done by the computer. Pattern generated by marker making systems can be directed to automated cutting machines which are operated without the help of human hands.(Fig 7)

Fig 7

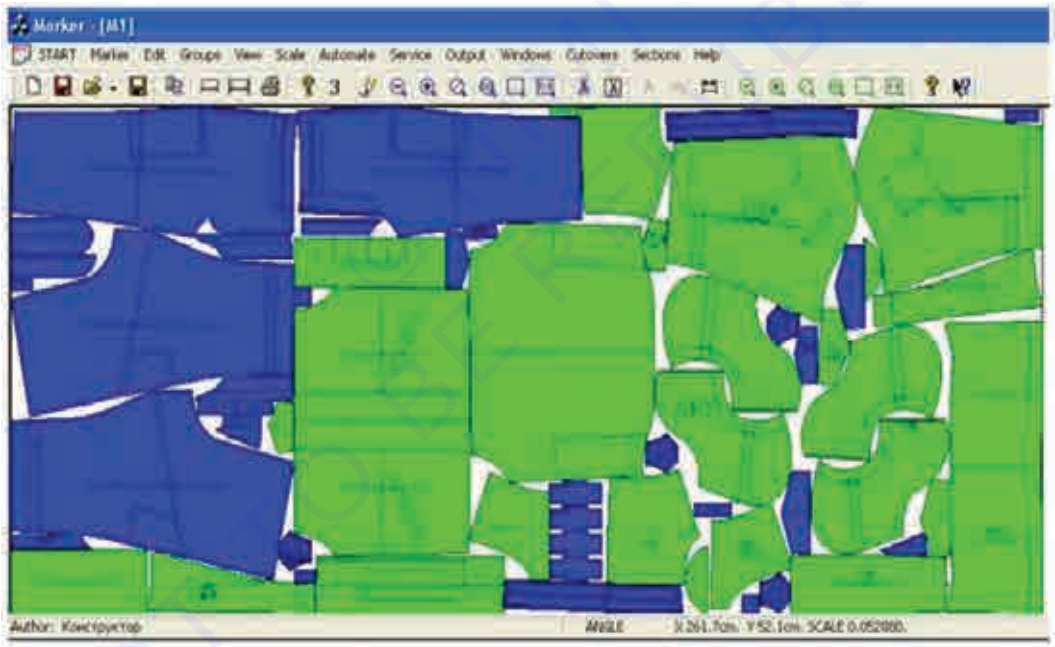

Grading systems

After a sample size pattern has been put, it has to be graded up and down on size. Certain points on the pattern are considered as" growth points" or places at which the pattern has to be increased or decreased to accommodate changing body size. At each growth point, the operator indicates the grade rule of the computer. The system will then automatically produce the pattern shapes in all the pre -specified sizes. Say if we define pattern for size 30, it can be easily graded for size 32/34/36 and so on.(Fig 8)

Digitizing systems

Digitizer put original patterns into the computer for the use and storage. It can be done by defining the X; Y coordinates of series of selected points around the pattern. These basic patterns can be manipulated with the help of computer, for example in case of trousers, darts can be moved, pleated can be created. In this way new designs can be created on screen from pre-existing pattern.(Fig 9)

Fig 8

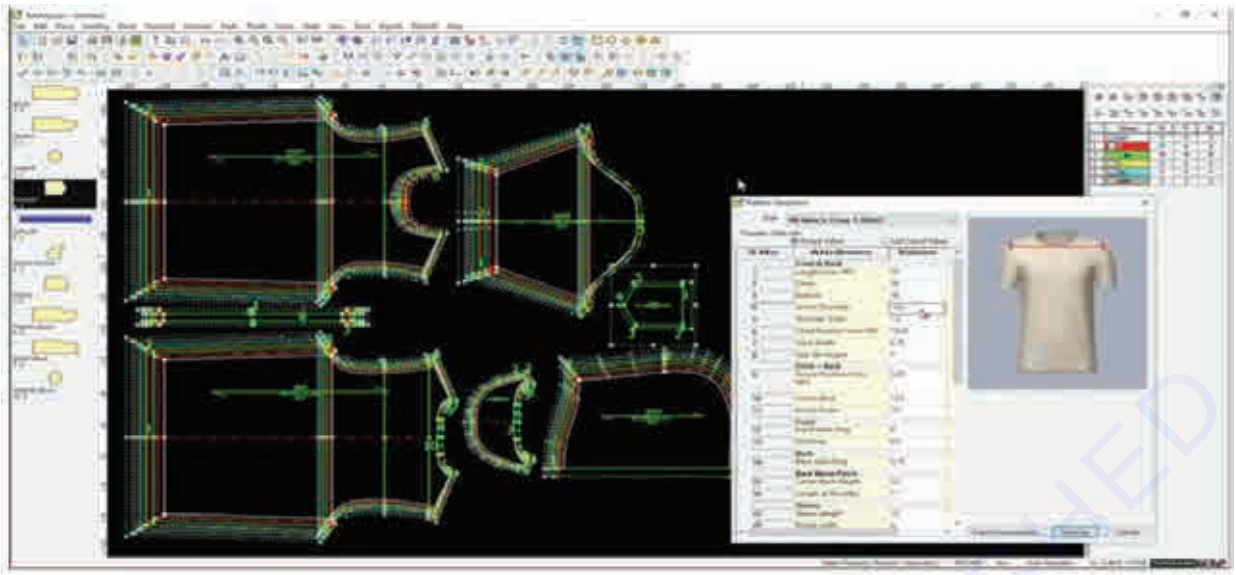

Fig 9

To start Digitizing system follows these steps

- Start the computer.
- Attach the mouse like device (puck) or digital pen (Stylus) &pattern design software key to the computer.
- open pattern design software
- Select File menu.
- Click digitizes option & digitize pattern with X&Y -coordinate systems.
- Save the pattern graph.(Fig 10)

Fig 10

© NIMI
NOT TO BE REPUBLISHED

LESSON 3 : Introduction of CAD software like fashion studio

Objectives

At the end of this lesson, you shall be able to explain

- introduction and Function of fashion studio sofware
- software Tools and their uses
- exercise and Project work on software

Introduction

A workplace that is specially made for fashion designers so that they can creatively design the styles of an outfit and then create successful apparel is known as a fashion studio. Fashion accessories and the development of the designs are done in a fashion studio by the designer and workers.

Fashion studio is a software tool used in the fashion industry for designing clothing, textile and accessories.it typically includes features for creating digital sketches, pattern and proto types as well as tools for managing the production process and collaborating with team members. Some popular fashion studio software option include

1 Adobe illustrator
2 Corel draw
3 CLO 3D
4 Browzwear

These softwares stream line the design process, allowing the designers to bring their ideas to life digitally before moving to physical production

Function of fashion studio

Virtual Prototype

Designers and Merchandisers want to see and touch a fabric and / or style before it is accepted or rejected. So waiting until a production sample comes back can be a costly venture. By using the manufacturing information and creating a digital fabric of any kind like woven, knit etc. designers, merchandisers and sampling departments are able to see a preliminary sample prior to production. In addition, this sample can be used for merchandising purposes in the event that the production sample doesn't come back in time for a showroom presentation, fashion show, catalog, shoot, etc. It is a very cost effective way of evaluation prior to production.

Technical Design

In the creation of the physical sample several departments collaborate and in most of the cases there is a no efficient mechanism of communication between them.Thisthypically involves a two part process consisting of both the technical "Style"drawing that conveys the look of the apparel along with key manufacturing parameters and the actual pattern making process. RFS brings these two processes closer together so that they are in alignment.

Benifits

- Reduce design cycle times and cost
- Increase creativity and productivity of designer
- Enable collaborating working
- Product information integrity
- Show your product to fastest customer in his favourite decoration
- Presentation can be send and receive in seconds, the three dimensional simulation system uses the simulation of the garment in order to present it in its natural setting
- A virtual catalogue can be prepared with thousands of proposals without having to invest either on fabrics or on the development of models and prototypes.
- The REACH colour card supports over 15,000 REACH colours. Auto matching defined colour with similar REACH colour showing REACH colour code; Search REACH colour by colour name.
- The fabric simulation system, which turns the computer into an authentic virtual loom, obtains the simulation of the fabric either on the screen or on paper by means of a printer, with total realism.(Fig 1)

© NIMI NOT TO BE REPUBLISHED

Fig 1

Texture Mapping

It is fast, easy to use, and the results are incredibly realistic. The cost and time saving benefits are equally impressive. In a world where turnaround time is so crucial, this is the key to a company's success.

Preliminary ideas can be directly scanned in the software and then manipulated all within the application. With a simple and intuitive set of tools, REACH Texture Mapping offers the opportunity to preview, on a model and in real time, the garments that a user designs. More so that the materials and fabrics used in the design will act exactly as they would if they were real. (Fig 2)

Fig 2

- Scan image, print image and output image in BMP, JPG, TIF and PSD formats.
- Modify image to be transparent, half transparent and hollow effect.
- Set and edit Hue, Lighting and Saturation.
- Edit 2D style.
- Various pens such as colour pen, Hue pen, clone pen, transparent pen, lighting pen etc.
- Partial fill with texture or colour.
- Automatic expansion or shrinking hollow area.

NOT TO BE REPUBLISHED

- Partial editing and reshape of design.
- Auto change texture for scanned image.
- Reproduce scanned style and accessories into a material library.
- Match different colour & texture on 2D Fashion Design.
- Imitation of hand drawing and various effects by embedding Photoshop & Painter.

3D Product Visualization

Reach 3D product visualization is a fashion design application capable of recreating the Fashion Design production process in an entirely digital environment. It empowers you to go to market with your products in a fraction of the time. It creates photo-realistic 3D rendering of Designs, colours, surfaces, textures and patterns.

A 3D image can take the place of a physical sample for early decision making in a product line. Merchandisers and retail clients can form opinions on a product based on virtual product models.

- Background, Mannequin selection and lighting.
- Fashion style Design, Modification, Combination.
- Distortion effect, Folding effect, wrinkles effect.
- Auto match texture and colour.
- Adjust texture pattern's size, angle.
- Solid line, Dot line with arrow, stitch line, willow line etc. User defined line, Zipper line, Zebra line, wave line etc.
- Design & Modify stitch line.
- Design accessories like necklace, zipper etc.
- Scanned pictures and 2D ornaments picture application.
- Use a material library by drag & drop.
- Style library, Mannequin library, Texture library, wrinkle library, Surface library, Colour library, Ornaments library.
- Save design series in one document for easy comparison between different styles.(Figs 3&4)

Fig 3

NOT TO BE REPUBLISHED © NIMI

Fig 4

Fabric Design

Any fabric design begins with a creative idea. Using REACH fabric Design creativity can be quickly translated into reality. It allows scanning, or importing, or to create any kind of fabric from dobby knits to leather fabrics in the software itself with real texture effects. The quality of the simulation is recognized by prominent textile designers, which turns the software into an authentic virtual loom, obtains the simulation of the fabric either on the screen or on paper by means of a printer, with total realism. Fabrics designed here can be taken to 3D product visualization or to texture mapping for presentation in realistic and dynamic ways in just a few clicks. It leads to avoid or speedup sampling. To promote time saving and to reduce raw material waste during the study of the collection or sampling.

- Various fabric structures.
- Adjust material Hue, Harness & quality.
- Scanned fabric correction.
- Change & adjust fabric colour.
- Create a weave texture according to yarn property and pattern.
- Easy pattern creation.
- Material reflection; Leather effect.
- Various textures in the library.
- Self-defined enterprise material library.
- Automatic combination for texture display and print. Fig 5

Fig 5

NOT TO BE REPUBLISHED © NIMI

Colour Communication

In a click it is possible to find the nearest REACH shade of any colour scanned, or imported. Colours can be personalized by RGB, CMYK, and Hue, Lighting and saturation by mixing or entering the values .Colours from user defined library, can either be mixed individually within the design or imported from colour library (REACH). Besides the creation of colours, it can be easily edited by grouping, auto matching etc.(Fig 6)

Fig 6

Design and Repeat

REACH design and repeat is a textile and surface designing tool. The software can create all types of repeats. Convert design into horizontal, vertical,1/2,1/3.2/3 repeats, copying, pasting, rotating, selecting and resizing all changes immediately take place over multiple repeats. Select motifs, part of textures and an area of a design to create new ideas.(Fig 7)

Fig 7

Software Tools & their uses

Reference: Reach Fashion Studio software

1 It is graphic software used to create or edit graphic images such as illustration line arts, charts, diagrams, logos, sophisticated web graphics, etc.

2 It is an open- source, powerful vector graphics application used to create two - dimensional scalable graphic images.

3 It is SVG vector software (Scalable vector graphics)

4 There are 4 folders of Reach Technology (RT) Lamode in the software:

4 Folders of Fashion Studio Software in RT Lamode:

Folder 1

- Reach lemajik(1):

It is only images and model images that are created.

- Reach Lemajik (2):

In it videos are created from one model to another model.

Or

Intermediate of one model to another model like men's to women body posture.

Folder 2

It consists of various design libraries used in RT Lamode.

- Technical drawing library
- Textile design library
- Techpack library
- Decorative library
- Accessory library
- Hats library
- Necklines library
- Ring library
- Shoes library etc.
- Fashion illustration library
- Model library etc.

Folder 3

It is a software application where we work at the interface.

Folder 4

It contains reach allure and in reach allure there are two types.

- Garment image
- Pattern image

Display elements on the interface of the Fashion Studio Software

Menu bar

It contains file, edit, view, etc. options

Command bar

It contains files. It is located on the right side of the user interface.It contains zoom levels , undo, cut, etc.

© NIMI NOT TO BE REPUBLISHED

Toolbar

It is located on the left side of the user interface. It contains tools free from shapes, lines, text and fills, etc.

Tools Control bar

It is also called a control bar which is located under the menu bar.

Canvas

It is the main work space. It is located in the middle of the ink space window.

Rulers

It is located on the top and left of the canvas.

Grid:

The grid is the set of vertical and horizontal lines. It is used to guide the drawing of objects and images. There are two types of grids.

- Rectangular grid
- Axonometric grid

Guide

The guides are the user defined lines. It provides an easy alignment to an object.

Palette bar

The palette bar is located at the bottom (above the status bar) of the window. It provides many frills and stroke styles (color, gradient, patterns) options.

Status bar

The status bar is placed at the bottom of the window. It provides routine edit settings and a suitable focal point for all editing tasks.

Uses and tools of Menu bar

1 File

New: create a new document from the default template.

New from template: Create new project from template.

Open: Open and existing document.

Open recent: Open the recent document.

Revert: To the last saved version of the document.

Save: Save document.

Save as: Save document under a new name.

Save a copy: Save a copy of the document under a new name

Save template: Save a copy of the document as template.

Import: Import a bitmap or SVG. Image into this document.

Export: Export this document or a selection as a PNG image.

Print: Print document.

Close: Close window.

Exit: Quit ink space, check for data loss.

2 Edit:

Undo: Undo last action.

Redo: DO again the last undone action.

Cut: Cut selection to clipboard.

© NIMI NOT TO BE REPUBLISHED

Copy: Copy selection to clipboard.

Paste: Paste objects from clipboard to mouse point or paste text.

Duplicate: Duplicate selected object.

Clone: Create clones of objects.

- Create Clone
- Create tiled clones
- Unlink clone
- Relink to Clone
- Select original
- Clone original path

Make a bitmap copy

Export selection to a bitmap and insert it into the document.

Delete: Delete a selected item, nodes, or text.

Select all: Select all objects or all nodes.

Select all in all layers: Select all objects in all visible and unlocked layers.

Select same

- Fill and Stroke
- Fill color
- Stroke color
- Stroke style
- Object type

Invert selection: Unselect what is selected and select everything else.

Deselection: Deselect any selected object or nodes.

Resize page to Selection: Fit the page to the current selection or the drawing if there is no selection.

Create guides around the page: Create guides aligned with the page borders.

Lock all guides: Toggle lock of all guides in the document.

Delete all guides: Delete all the guides in the documents.

Preferences: Edit global ink space performances.

3 View

Zoom

- Zoom in.
- Zoom out.

Orientation

- Rotate clockwise
- Rotate counter clockwise
- Reset rotation
- Lock rotation
- Flip Horizontally
- Flip Vertically
- Reset Flipping

© NIMI NOT TO BE REPUBLISHED

Display Mode

- Normal
- Outline
- No filters
- Visible Hairline
- Outline overday
- Cycle
- Toggle

Split Mode

- None
- Split
- X-ray

Gray Scale: Toggle Between normal and gray scale modes.

Color Management: Toggle between normal and color managed modes.

Page Grid: Show or hide the page grid.

Guides: Toggle visibility of all guides in the documents.

Show/Hide

- Command Bar
- Snap control bar
- Tool control bars
- Tool box
- Rulers
- Scroll Bars
- Palette
- Status Bar

Show/Hide Dialogs: Show or hide all dialogs.

Command Palette: Show or hide the on-canvas command palette.

Swatches: Select colors from a swatches palette.

Messages: View debug messages.

Previous Window: Switch to the previous document window.

Next Window: Switch to the next document window.

Icon Preview: Preview Icon.

Duplicate Window: Open a new window with the same document.

Full Screen: Stretch this document window to full screen.

Wide Screen: Toggle wide or narrow screen setup.

4 Layers

Layers and Object: View objects.

Add Layer: Create a new layer.

Rename Layer: Rename the current layer.

Switch to layer above: Switch to the layer above the current.

© NIMI NOT TO BE REPUBLISHED

Switch to the layer below: Switch to the layer below the current .

Move selection to layer above: Move selection to the layer above the current.

Move selection to layer: Move selection to layer .

Layer to top: Raise the current layer to the top.

Raise layer: Raise the current layer.

Lower Layer: Lower the current layer.

Layer to bottom: Lower the current layer to the bottom.

Delete current layer: Delete the current layer.

Duplicate current layer: Duplicate the current layer.

5 Objects

Layers and Objects: View objects.

Fill and Stroke: Edit object colors, gradients, arrowheads and other fill and stroke.

Object Properties: Edit the ID, locked and visible status ,and other object properties.

Symbols: Select symbols from a symbol palette.

Paint serves: Select paint server from a collection.

Group: Group selected objects.

Ungroup: Ungroup selected object.

Pop selected objects out of group: Pop selected objects out of group.

Clip

- Set clip
- Set inverse clip
- Release clip

Pattern

- Objects to patterns
- Pattern to objects

Raise to top: Raise selection to top.

Raise: Raise selection one step.

Lower: Lower selection one step.

Lower to bottom: Lower selection to bottom.

Rotate 90 degree CW: Rotate selection 90 degree clockwise.

Rotate 90 degree ACW: Rotate selection 90 degree anticlockwise.

Outset: Off set selected path.

Path effects: Path effects manage, edit and apply path effects.

Paste path effects: Apply the path effects of the copied object to selection.

Remove path effect: Remove any path effect from selected objects.

Flip horizontal: Flip selected object horizontal.

Flip vertical: Flip selected object vertically.

Unhide all: Unhide all objects.

© NIMI NOT TO BE REPUBLISHED

Unlock all: Unlock all objects.

Transforms: Precisely control objects transformation.

Align and distribute: Align and distribute objects.

6 Path

Object to path: Convert shapes to path.

Stroke to path: Convert stroke to path.

Trace bitmap: Create one or more paths from a bitmap by tracing it.

Union: Create union of selected paths.

Difference(ctrl+-): Create a difference of selected paths.

Intersection: Create intersection of selected path.

Exclusion(ctrl+^): Create exclusive or of selected path.

Division(ctrl+/): Cut the bottom path into pieces.

Cut path: Cut the bottom paths into pieces, removing fill.

Combine: combine several paths into one.

Break apart: Break apart selected paths into sub parts.

Split path: Split selected paths into non- overlapping selections.

Inset: Inset selected paths.

Outset: Offset selected paths.

Path effects: Path effect manage, edit and apply path effects.

Paste path effects: Apply the path effects of the copied objects to the selection.

Remove path effect: Remove any path effects from selected objects.

7 Text

Text and Font(shift+ctrl+T): View and select font family, font size and other text properties.

SVG font editor: Edit SVG font.

Unicode characters: Select unicode characters from a palette.

Put on path: Put text on path.

Remove from path: Remove text from path.

Flow into flame: Put text into a frame, creating a flowing text linked to the frame object.

Set subtraction frames: Flow text around the frame ,only available for SVG.

Unfollow: remove text from frame (creates).

Convert to text: Convert flowed text to regular text object.

Check spelling: Check spelling of text in document.

8 Filters

Bevels

- Bloom
- Bright metal.

Blurs

- Cross blur
- Clean edges.

© NIMI NOT TO BE REPUBLISHED

Bump

- Basic diffuse bump.
- Basic specular bump
- Canvas bump

Color

- Black light
- color shift
- Gray Scale

Distort

- Lapping
- pixels smear

Fill and transparency

- Fill background
- Flatter transparency

Image effects

- Age
- Edge detect
- Sharpen

Materials

- 3D Marble
- Enamel Jewellery
- Flex Metal

Image paint and draw

- Blue print
- Alpha draw liquid

Morphology

- Black hole
- Contouring discrete
- Posterized blur

Non realistic 3D shaders

- Brush draw
- Chrome emboss
- Deep chrome

9 Extensions

- Previous extensions
- Arrange
- Color
- Document
- Text
- Export

10 Help

About money: View memory use.

About: About RT Lamode.

© NIMI NOT TO BE REPUBLISHED

Module 2: Surface Embellishment Technique

LESSON 4 : Tie and Dye

Objectives

At the end of this lesson, you shall be able to

- introduction & types of tie & dye process
- material and equipment needed for tie & dyeing
- tie & dye techniques

Introduction of tie & dye

Tie-dye is a term used to describe a number of resists dyeing techniques. The process typically consists of folding, twisting, pleating, or crumpling fabric or a garment, before binding with string or rubber bands, followed by the application of dye or dyes parts. The areas that are tied remain undyed, resulting in beautiful patterns. This craft is one of the oldest in the world for making colored designs on a fabric. Its definite origin is unknown, but the earliest information of this craft can be achieved from books and other records of the 6th century AD which are to be found in the East, particularly in China, India, Japan and Indonesia. Records also say that this craft was in existence in South America and Africa during the 5th century. Europe has only recently discovered the creative possibilities of tie and dye.

Types of tie & dye

1 **Bandhani:** The term 'BANDHANI' means tying up.Bandhani is a type of tie-dye textile decorated by plucking the cloth with the fingernails into many tiny bindings that form a figurative design. The term bandhani is derived from the Sanskrit verbal root bandh ("to bind, to tie"). Today most Bandhani making centers are situated in Gujarat, Rajasthan, Sindh, Punjab region and in Tamil Nadu where it's known as Sungudi.

2 **Shibori:** The word shibori comes from the Japanese verb root "shiboru", meaning "to wring squeeze, press. Shibori is a Japanese manual resist dyeing technique, which produces pattern on fabric

3 **Jumputan:** It is a resist tie-dyeing process known and used in Sumatra and java. In Sumatra. Jumputan is known by name 'pelangi' which translates as rainbow. in java this Jumputan is called kain Kembangan or flower cloth because it would be dyed in the colors of flowers.

Materials & Equipment needed for Tie & Dyeing

1 **Fabric**
- It must be made of Natural fibers as they and hold the dye well.
- Cotton (100%), linen, rayon, muslin, organdie, voile and silk are examples.

2 **Fabric dyes:** Several brands are available—RIT, Dylan etc.
- Hot or cold water dye may be used.

3 **Fixative:** A chemical added to the brighter and to fasten the colour into the fabric.

4 **Pot:** Used for heating water to dilute the dye when using hot water dyes.

5 **String/Rubberbands:** To tie up the fabric you will be dyeing.

6 **Scissors:** For cutting fabric, string /rubber bands.

7 **Rubber gloves-** To protect your hands from the dye.

8 **Plastic basin-** To mix dye bath and soak the fabric in when dyeing.

Tie & dye techniques

1 **Binding (Circles)**
- Lay the fabric flat.
- Gather up a small area to be tied off (with or without stones inside; other objects such as shells, marbles, bottle covers etc. may be used also).

© NIMI NOT TO BE REPUBLISHED

- Tie each one securely with the twine or rubber band.
- Dip in the dye bath for 20 minutes, then remove.
- Untie to reveal the design then place it to dry.

2 Marbilng (Crushing/Crumping)

- Lay the fabric flat.
- Bunch up the fabric into a ball by crushing it up in the palms of the hands.
- Tie it tightly with twine or using several rubber bands in a criss-cross manner.
- Dip in the dye bath for 20 minutes then remove.
- Unite to reveal the design then place it to dry.

3 Pleating (Stripes)

- Lay the fabric flat.
- Start by folding the fabric like an accordion or paper fan.
- Secure tightly with rubber bands or tie tightly with twine at desired distances.
- Dip in the dye bath for 20minutes then remove.
- Untie to reveal the design then place it to dry.

Batik

At the end of this lesson, you shall be able to

- introduction & types of batik
- tools and equipments
- raw material used in batik
- procedure of batik

Introduction

The word batik actually means wax writing. It is a way of decorating cloth by covering a part of it with a coat of wax and then dyeing the cloth. The waxed areas keep their original colour and when the wax is removed the contrast between the dyed and undyed makes the pattern.

BATIK: is a technique of wax-resist dying applied to whole cloth, or cloth made using this technique. Batik is made either by drawing dots and lines. The tradition of making batik a found in various countries, including Indonesia, Malaysia, India, Sri Lanka, Philippines and Nigeria.The beauty of batik lines in its simplicity and the fast that one need not be an artist to achieve results. Some of the best effects in batik are often achieved by chance. The history of India batik can be traced as far back as 2000 years.

Types of batik

1 Batik Block(Block printing batik)

2 Batik screen(Screen printing)

3 Batik lukis (Hand drawn batik)

1 Batik Block (Block Printing Batik)

Block printed batik was one of the early type of batik. It is a method that use a block carved with patterns, which is then dipped in wax and stamped onto fabric. Before this, the blocks were made out of potato.

2 Batik Screen (ScreenPrinting)

Batik screen printing creates more consistency in the printing that is why we see batik screen printing as an innovation that would sustain the traditional craft and make it more accessible to the larger market.

In turn, this would create more demand in the industry, and allow for the younger generation to see batik as a business that could sustain their livelihood.

© NIMI NOT TO BE REPUBLISHED

3 Batik Lukis(Hand Drawn Batik)

Also known as Batik Canting, Hand drawn batik is where the hot wax is used in a pen-like tool of brass called canting, is drawn into the fabric with a desired pattern. The artist must have a steady hand, as one mistake will be very difficult to remove. After the pattern is drawn and the wax has dried, the artist then colours in.

Tools & equipment

Canting: It is a beautiful Javanese tool for applying wax to fabrics when making batik. They have a long handle and a copper or brass pot that holds out molten wax. It is a small cup-shaped tool with a handle set at right angles to the foot on one side and a nice spiral arrangement on the other.

Electric Batik Pens: Batik Pen melts candles, crayons, batik wax, and paraffin to form a controlled thin or thin line. When the tool is placing at an angle, there are no drops of melted wax. Its heats up quickly and maintain an even more melting temperature. There are many types of pans, such as batik funnel pans and batik wax pans.

Wooden blocks: Various craftsmen hand-carve these teak logs. These range from four inches to five or six inches in size. On the back of each block, there is a wooden handle to hold the craftsman in place.

Dye tubs: An excellent craft to use for a dye bath is one of the chiefs for successful dyeing. If one is available, the best thing to use is a seamless copper tube.

Raw material used

1 Cotton or silk cloth is used for batik

(Synthetic materials are generally not used).

2 Paraffin wax is used in the process.

3 Dyes –Naphtali, Direct and Vat dyeing process

4 Firewood and kerosene for heating the wax

Procedure of batik

Step 1: Cotton fabric is bleached (with bleaching powder and water) and kept overnight fir whiteness. The process is done by machine or manually.

Step 2: Wax printing is done either with the hand, using a brush or with the blocks the table on which printing is done is kept cool with send and water so that the wax does not paraffin wax is melted and kept on the stove.

Step 3: After the initial printing, the fabric is dipped in a color fixer.

Step 4: The fabric is then dipped in napthol dye for10-15 minutes

Step5: If only a single colour is required, then after this the cloth can be dipped in hot water so that the wax comes off and one gets the required pattern and colour.

Step 6 If any white spots are left and doesn't want that, then the fabric could be dipped once more in any direct dye (say yellow). This process is called topping.

Final sample of batik

NOT TO BE REPUBLISHED © NIMI

Stencil Printing

At the end of this lesson, you shall be able to

- introduction of stencil printing
- tools and raw material
- procedure of stencil printing

Introduction: The art of stenciling is new. It has been applied to thedecoration of textile fabrics from time immemorial by the Japanese. In stencil printing the design is first cut in cardboard, wood or metal. The stencils may have fine delicate designs or large spaces through which color is applied on the fabric. The pattern is cut out of a sheet of stout paper or thin metal with a sharp-pointed knife, the uncut portion representing the part that is to be reserved or left uncolored. The sheet is now laid on the material to be decorated and the color is brushed through its interstices. Stencil printing is a technique of printing where a stencil, which is a template with a pattern or design, is placed over a fabric surface. Ink or paint is then applied through the openings in the stencil, creating a printed image on the underlying surface. It is commonly used in art, design, and manufacturing for creating repeated patterns, logos, signage, or labeling products. Stencil printing allows for accurate and efficient replication of designs on various surfaces. With stencils, you can print the same image as many times as you like.

Stencil Printing

Tools and raw material

1 OHP/ivory sheet

2 Motif/design

3 Fabric

4 Paper cutter

5 Paint/acrylic colour

6 Sponge

7 Brush

1 OHP/ivory sheet: A stencil is an impervious material, such as a sheet of paper, that has lettering or a design perforated through it. This perforated design allows a substance like ink, paint, or metallic powder to be forced onto a surface for printing. Stencil can be made on OHP transparent sheet or ivory sheet.

2 Motif/design: Stenciling produces an image or pattern on a surface by applying pigment to a surface through an intermediate object, with designed holes in the intermediate object. The holes allow the pigment to reach only some parts of the surface creating the design.

NOT TO BE REPUBLISHED

3 **Fabric:** Stabilize the fabric Cover your surface and stabilize the fabric using painters'tape. Use repositionable adhesive spray. Using an adhesive spray (repositionable) when stenciling on fabric is must if you want crisp results. Apply the paint in layers the fabric soaks up the paint, so you must work in layers.

4 **Paper cutter:** A stencil cutter is a machine that cuts stencils out of various materials such as paper, fabric, and leather. It is also known as a stencil burner. With a vinyl cutter, you can create multiple stencils quickly and easily by creating the design on your computer and having.

5 **Paint:** Stenciling produces an image or pattern on a surface by applying pigment to a surface through an intermediate object, with designed holes in the intermediate object. The holes allow the pigment to reach only some parts of the surface creating the design.

6 **Sponge:** Sponges can be used to paint your stencil and is an alternative to brushes a sponge area is larger than a brush so the application of paint is quicker.

7 **Brush:** A Stencil brush is a specialist brush with short, firmly packed bristles. These types of brushes are available in various widths, from small for tiny detailed sections to large ones for faster painting.

Procedure of stencil printing

1 **Design Creation:** Begin by creating or selecting a design that you want to print using a stencil. This design can be anything from text to an image or a combination of both.

2 **Stencil Preparation:** Prepare a stencil material such as acetate, Mylar, or a specialized stencil paper. Ensure that the stencil material is clean and free from any dust or debris.

3 **Cutting the Stencil:** Use a cutting tool, such as a craft knife or a laser cutter, to carefully cut out the design from the stencil material. Take your time to ensure precise and clean cuts.

4 **Surface Preparation:** Prepare the surface onto which you want to apply the stencil design. This may involve cleaning the surface, applying a base coat or primer, or any other necessary preparation steps depending on the material and desired outcome.

5 **Printing Technique:** Depending on the desired effect, you can use various printing techniques such as screen printing, block printing, or sponge dabbing to transfer the ink from the stencil onto the surface. Follow the specific instructions for your chosen technique.

6 **Removing the Stencil:** Carefully remove the stencil from the surface while the ink is still wet. Take your time to prevent smudging or smearing the printed design.

7 **Clean Up:** Clean your stencil, tools, and work area promptly to maintain their longevity and prevent any unwanted transfer of ink or paint. Dispose of any waste materials properly according to local regulations.

© NIMI NOT TO BE REPUBLISHED

Block Printing

At the end of this lesson, you shall be able to

- introduction and types of block printing
- the process of block printing

Introduction of block printing

Block printing on textiles is the process of printing patterns on textiles, usually of linen, cotton or silk, by means of incised wooden blocks. It is the earliest, simplest and slowest of all methods of textile printing.Block printing by hand is a slow process. It is,however, capable of yielding highly artisticresults, some of which are unobtainable by any other method.India, since ancient times, is known for its unique arts and crafts. One of the earliest techniques used to colour fabric was printing with a simple wooden block.Printing is the process of applying colour to fabric in definite patterns or designs. It is also known as known as localized application of dye or pigment in thickened form to a substrate to create an attractive design with well defined boundaries.There is also much diversity in design, normally varying from figures of animals and birds to traditional patterns of flowers, trees and also modern graphical patterns.These magnificent block prints and designs are best used in decorative wall hangings, garments like saris, skirts, tops, bed linens and dress materials.Rajasthan and Surat became the important trading centres of printed textiles particular in block print art.

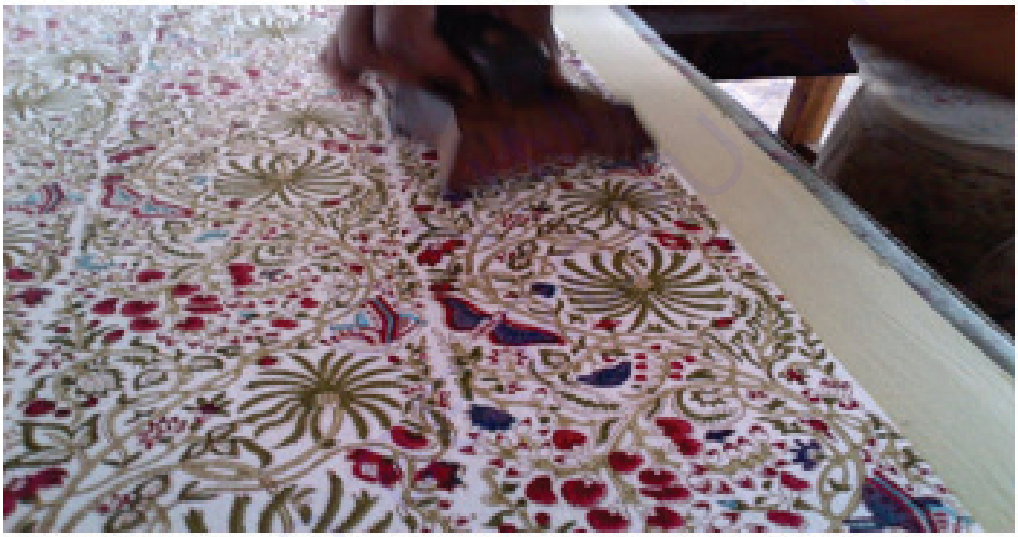

The variety of designs is Hand-block printing is an inseparable part of cultural heritage of Rajasthan.There are two types of block printing famous in the state of Rajasthan namely

- Sanganeri - printed on white background
- Bagru - printed on black and red background

Types of block printing

1 Sanganeri print

2 Bagru print

3 Dabu print

1 Sanganeri print

- In Rajasthan Colorful prints of Birds, Animals, Human figures, Gods and Goddesses are popular.
- The important centers for this form of are Jaipur, Bangru, Sanganer, Pali and Barmer.
- Bold patterns and colors are popular. They are printed repeatedly in diagonal rows.

- Doo Rookhi Printing is also famous here. In this technique, artists print on both sides of the cloth. Is famous for its fine hand block printing in subdued colours.
- Sanganer famous for is dyeing and printing of colourful dresses, bed sheets, curtains, dress material and variety of other textiles and known as a centre of plain and dyed clothes.
- Wooden blocks are made of teak wood and vegetable dyes made of madder, pomegranate rind, indigo, and turmeric are used.Now days replaced by chemical dyes
- Sanganer has become a export hub for hand block print export.

2 Bagru print

Bagru is famous for its Syahi-Begar prints and Dabu prints.

- The Syahi-Begar Prints are designs in a combination of black and yellow ochre or cream.
- The Dabu Prints are prints in which portions are hidden from the dye by applying a resist paste.
- Barmer is known for its prints of red chilies with blue-black outlines, surrounded by flower-laden trees. The other famous prints are of horses, camels, peacocks and lions, called Sikar and Shekahawat prints. Motifs are simple and include floral and linear patterns.
- Main colors used are black, blue, red and maroon. Extracted from naturally occurring sources
- Black from worn-out iron horse or camel shoes soaked in water.Red from gum paste and phitkari, Maroon by mixing the above two.
- For picking a particular color, there is a traditional reason such as indigo for lord krishna, saffron for a saint or yogi, yellow for spring season, etc.

3 Dabu print

Dabu is an traditional form of block printing technique in India which uses floral and thematic patterns of design. In this fabric dyeing technique, it uses organic colours and vegetable pastes. Hence, they are eco-friendly and skin-friendly. It is a mud-resist hand block printing technique used in state of Rajasthan.

Tools& raw material for block printing

- Wooden block- Used to print the patterns on the cloth.
- Fabric-It is used for printing
- Printing table- It is used for printing.
- Wooden tray with a bamboo lattice bed cover-It is used for spreading of the color evenly.
- Printing pad- It is used to spread the color evenly.
- Pins- used to tighten the cloth on the tighten the cloth on the table.
- Brushes-used to clean the surface for better printing.
- Scale- used for marking the areas to be printed.
- Sponge woolen cloth-used to spread the colour evenly in the wooden tray.
- Colour/ink-used for block printing

Procedure of block printing

Step 1: Block carving

It is the Chhipa Community (Rajasthan) that possesses a majority of block carvers, dyers and printers in India. Block carving is the first step in the block printing process and like many other crafts in India, has been in existence since time immemorial. The block-carving artisans make use of tools such as small hammers, chisels and drills to be able to carve elaborate patterns into wooden blocks.

After the carving process, these blocks are dipped in mustard oil and allowed to rest for at least a week. This helps prevent cracking of the blocks upon exposure to dry conditions. The carvers also drill miniature holes into the wooden blocks to allow the wood to breathe. This also extends the life of a wooden block by upto a few decades.

© NIMI NOT TO BE REPUBLISHED

Step 2: Application of dye

After the carving process, dye is applied to the wooden block surface with the help of a 'sieve'. The wooden block is gently pressed onto the palette of dye before being applied against the fabric.

Step 3: Treatment of fabric

The chosen fabric for block printing is first washed to remove all the starch. Fabrics such as saree lengths usually require dyeing. This is done before the printing process begins. For hand block printing, the craftsman will lay the fabric on a printing table, stretching it across the entire length and hold it in place with tiny pins.

Step 4: Printing

Block printing has a special technique that needs to be followed in order to get the desired results. Printing always begins from left to right. A plank of wood is used to even out the colour on the tray. The craftsman dips the block into a dark outline colour and applies it to the fabric. This is done repeatedly along the length and breadth of the fabric.

Colour Pad For Block Printing

Coloured pigment is mixed with a thickener or binder. A printing pad made from two layers of muslin and one layer of hessian.A sheet of polythene is used to keep the pad from drying out.

Printing

- The block is then placed carefully on the fabric and struck with the heel of the printer's hand. The process is repeated until the entire cloth is covered.
- Each colour has its own block and each Colour can vary owing to the weather and as it is printed in five metre lengths can vary within a collection.

- The block is then placed carefully on the fabric and struck with the heel of the printer's hand. The process is repeated until the entire cloth is covered.
- Each colour has its own block and each Colour can vary owing to the weather and as it is printed in five metre lengths can vary within a collection.

Drying the fabric

The fabric, after pigment printing is dried out in the sun.This is part of the fixing process. It is then rolled in wads of newspapers to prevent the dye from adhering to other layers and steamed in boilers constructed for the purpose.

Hand Painting

At the end of this lesson, you shall be able to

- introduction of hand painting
- list of tool & materials used in hand painting
- procedure of hand painting

Introduction

Hand painting is another method used in the Banaras saree making. In this process, the outlines, borders and lines to distinguish the patterns on certain designs are drawn using hand painting technique apart from block printing and screen printing. It is one of oldest technique's to embed designs on sarees.

- Hand Painting is the process of using fabric paint to decorate a piece of fabric or garment.
- This technique is done free hand using a paint brush.

© NIMI NOT TO BE REPUBLISHED

- Hand painting is an excellent and versatile technique for creatively decorating fabric and fabric items. It is an excellent technique to use to give old clothes a fresh new look.

Items that cab be hand painted

- **Garments:** Pants, jackets, shirts, blouses, dresses, skirts, scarf's etc.
- **Household items:** Napkins, drapes, table cloths, cushion covers etc.
- **Wall hangings etc.**

List of Tool & Materials used in Hand painting

- **Fabric**

Any type of fabric can be painted on however natural fabrics like cotton, silk and linen which are tightly woven fabrics are the best to use and easiest to decorate or to paint on. Other natural fabrics include muslin, ramie, voile and poplin.

- **Fabric paint**

Acrylic based fabric paints are used.

- **Brushes**

Both round and flat brushes of different sizes are needed.

- **Embroidery hoop/ wooden frame**

Used for stretching the fabric so that it can be taut to allow the paint to be absorbed the fabric of the fabric and for easy manipulation. (Large pieces of fabric to be painted on is stretched on a printing table)

Procedure of hand painting

1 Get the design, a light table the fabric and a pencil.

2 Use masking tape to hold the design in place. Put the fabric over the design and tape in place.

3 Using a pencil to lightly trace the design onto the fabric.

4 Complete traced design.

5 Collect all the materials needed: fabric paints, brushes (flat and pointed), water container and palette. Stretch the fabric using an embroidery hoop in preparation for painting.

6 Paint the different parts of design as per the choice of colors.

Care of hand painted articles

- **Drying:** Once painting is completed, leave the piece to dry for twenty four hours.
- **Heat set:** after drying the paint must be 'set' into the fabric meaning it must fixed into the fibres of the fabric. The best way to do this is by heat setting.
  - Heat setting is ironing the fabric on the opposite side of where you have painted using a dry iron on a medium to low level.
- **Wait:** Wait 4-5 days before washing your garment.

© NIMI NOT TO BE REPUBLISHED

Quilting

At the end of this lesson, you shall be able to

- introduction of quilting
- types of quilting
- material and tools used for hand quilting

Introduction of quilting

Quilting is the process of creating a quilt or sewing of two or more layers of material together to make a thicker padded material with a soft substance or wadding between them. It is a hand work which makes use of geometric designs. These designs are formed by combining colors, lines and shapes.

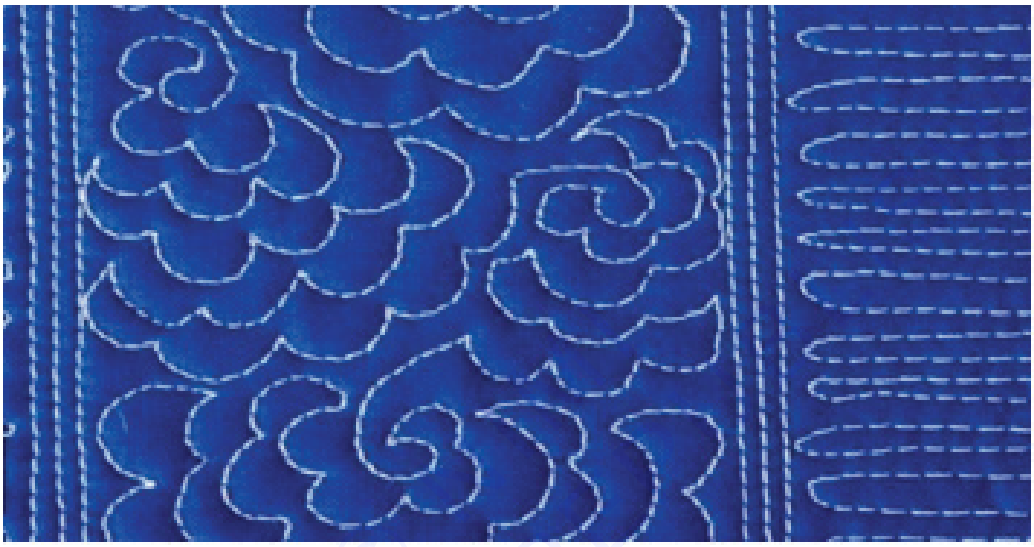

Types of quilting

1 Hand quilting

Hand quilting is a classic method that involves hand stitching the fabrics together to make the quilt top; there are many ways to make a hand quilt. Going by the traditional method, hand quilting is done with a hoop as it can keep the fabric taut while stitching with a thread and a needle. Recently, some quilters have started quilting without a hoop. However, the use of a hoop depends on what you are quilting. It is less expensive since there's no need for a machine or extra equipment.

2 Machine quilting

Quilting with a sewing machine is another method. This way of quilting speeds up the process of making a piece of quilt efficiently. Each machine used to quilt is different based upon the brand and model.

3 Free-motion quilting

Free-motion quilting is a process that can be done on any machine using a straight stitch. You will need a darning foot for this method of quilting. Consider using a strong thread for this method. Free-motion quilting involves moving the fabric freely with the machine needle.

4 Longarm quilting

Unlike the free-motion quilting method, which can be done on any machine, Longarm Quilting involves a special machine to quilt the fabric.

Quilting tools and materials

1 **Graphic paper:** Useful for planning or sketching a design to scale.

2 **Dressmaker's carbon paper and tracing paper-** Useful for planning or sketching a design to scale.These are very good materials for transferring the design

3 **The ruler or yardstick -** Useful for marking straight line designs and as a measuring device.

4 **Compass or a Round Object -** It can be used for drawing curves.

5 **A Pencil or a Dressmaker's/Tailor's Chalk -** It is used to mark directly on fabric.

6 **Pounce:** It is a special powder used for temporary markings with perforated patterns.

7 **Hand quilting needles:** Hand quilting needles are generally smaller and stronger than normal sewing needles. They have a very small eye which prevents any extra bump at the head of the needles when you are pulling through the thread.

8 **Pins:**These are the plastic headed pins which are very sharp and good for piercing straight through the material.

9 **Scissors:**They come in a wide variety of shape sand sizes.

10 **Pencils:**There are varieties of marking pencils from soft lead to water soluble ones that are available in the market.

11 **Thimble:** Make it habit to use this metal, plastic or leather device on the middle finger to prevent being pierced by the needle.

12 **Frames and hoops:** It is used to hold the three layers of materials together to prevent from budging up of underneath layers. A quilting hoop is deeper in order to accommodate the three layers of top, battling and backing.

13 **Fabrics used in quilting:** The best fabric to start with is firmly woven, lightweight, pure cotton, although number of polyester cotton blends is quite manageable and easy to handle.

Patch Work

At the end of this lesson, you shall be able to

- introduction of patch work
- types of patch work
- explain the uses and techniques of patch work

Introduction

Patchwork, the process of joining strips, squares, triangles, hexagons, or other shaped pieces of fabric (also called patches), by either hand or machine stitching, into square blocks or other units. Patchwork or "pieced work" is a form of needlework that involves sewing together pieces of fabric into a larger design. The larger design is usually based on repeating patterns built up with different fabric shapes (which can be different colors). These shapes are carefully measured and cut, basic geometric shapes making them easy to piece together. It is one of the primary construction techniques of quilting and is often combined with appliqué.

Types of patch work

1 Stained glass window patchwork

This patchwork is done by attaching pieces of tiny fabrics together. This usually forms a rectangular shape and can be kept as a window hanging! As the name suggests, this patchwork has a stained appearance.

2 Cathedral window patchwork

This patchwork is usually done by using bright colours along with pastels or white. This Quilting Patchwork and Appliqué design has a definite pattern and is usually made in square, rectangle or hexagonal shapes.

3 Somerset patchwork

Somerset patchwork is made in a spherical shape. There are two or more coloured fabrics used in making this patchwork. In this method, small rectangular pieces of fabric are folded into triangular shapes and then stitched on a foundation fabric. This is usually used for making quilts or cushion covers.

© NIMI NOT TO BE REPUBLISHED

4 Crazy quilting

Crazy quilting is one of the most fancy and interesting types of patchwork. For making this, tiny pieces of clothes with different colours, patterns and designs are selected and joined together artistically. This is very easy to make and can be found easily in the market.

Uses of patch work

Patchwork is often used to make quilts, but it can also be used to make rugs, bags, wall-hangings, warm jackets, cushion covers, skirts, waistcoats and other items of clothing. Some textile artists work with patchwork, often combining it with embroidery and other forms of stitchery.

When used to make a quilt, this larger patchwork or pieced design becomes the "top" of a three-layered quilt, the middle layer being the batting and the bottom layer the backing. To keep the batting from shifting, a patchwork or pieced quilt is often quilted by hand or machine using a running stitch in order to outline the individual shapes that make up the pieced top, or the quilting stitches may be random or highly ordered overall patterns that contrast with the patchwork composition.

Techniques of patch work

1 Chain piecing

Joining square or rectangular fabric pieces with a straight stitch – this is the usual way of sewing patchwork pieces. You can hand sew or machine sew the straight edges. You can use a backstitch or a running stitch to sew small pieces of fabric together in patchwork. Hand sewing gives you some extra control especially when you are sewing with small pieces of fabric. Do not forget to secure the thread at the start and ending.

2 Strip piecing

This is a time-saving method of joining fabric pieces together. In this method strips of fabrics are joined together and then they are cut apart. Afterward, they are joined in different sequences to form different patterns. This involves joining strips of fabric which may be of uneven width together to form the patchwork piece.

3 Sewing 2-triangle units

Joining triangular pieces easily this is a method of making many numbers of 2-triangle square units easily. Take the two square fabric pieces together which you want to join as 2-triangle squares and mark diagonally across. Now sew on each side of this line, 1/4 inch apart from this line.

4 Stash and stitch method

This method can be used If you have a number of fabric pieces in different colours and you want a vivid quilt in a crazy design. In this method you cut out big square pieces from your fabrics. Stack all of them on top of each other – all right side up. Ensure that no similar pieces are stacked together.

5 English paper piecing

This is a method used to join together geometric shapes like diamonds, hexagons, honeycombs, using paper templates. This is usually done by hand stitching. Paper templates are cut out and then fabric is cut with extra seam allowance. The paper piece is enclosed inside the fabric with the seam allowance turned inside and pressed – many units like this are formed and they are joined by carefully hand stitching the edges together. You can use a ladder stitch for this.

6 Crazy patchwork

In this, the patchwork is made on top of another foundation fabric. Different sized fabric pieces (with straight edges) are kept on top of the foundation fabric cut in the size of patchwork you want. A cotton lining material is used as the foundation.

7 Somerset patchwork

In this method, small rectangular fabric pieces are folded into triangle shapes and then stitched on to a foundation piece of fabric.

8 Reverse pieced foundation piecing for patchwork

This method is used to make pretty designs and motifs on a patchwork with good accuracy. The fabric pieces are arranged in the design you want on the backside of the foundation fabric. The fabric pieces are then joined together along the edges.

© NIMI NOT TO BE REPUBLISHED

9 Seminole patchwork

This involves joining fabric pieces and cutting them and then re-joining them in different sequences. They are then cut at an angle to form patterned designs. Mark at an angle and cut and you will get an angled band which can be used in many ways – especially as borders for blankets, quilts etc.

Applique Work

At the end of this lesson, you shall be able to

- introduction and types of applique work
- list of tools & raw materials used in appliqué work
- procedure of applique work

Introduction

Appliqué is an ornamental needlework where a piece of fabric of different shapes is stuck or sewn onto a larger piece of fabric. The term "appliqué" originates from the Latin word "applico" which means "apply" and the French word "appliqué" which means "attach". Appliqué is one of the oldest and finest decorative methods practiced in the world. Appliqué is similar to traditional embroidery, which also involves the use of a needle and thread to add decorative elements to the fabric. But appliqué is different from traditional embroidery or this can be considered as a special type of embroidery because it uses small pieces of fabric to create a design, whereas traditional embroidery uses thread or yarn to create a design.

Hstory of applique

In the beginning, the method was used as a way to strengthen worn parts and holes of garments and other items. Archeologists have found ancient examples of appliqués in Egypt, Siberia, Mongolia.

Today, appliqué is used all over the world as a way to embellish garments, decorative items for homes, bags, quilts, blankets. Appliquéd cloth is a part of the tradition in different places like Benin, West Africa; Scandinavia, Russia and Eastern Europe; India, Pakistan.

In India we can see that the appliqués designs are quite popular in Ahmadabad, Saurashtra, Banaskantha, Patan and Kutch of Gujarat; Pipli and Puri of Odisha, different cities of Uttar Pradesh, Bihar, and Madurai of Tamil Nadu etc. Today, Pipli, Odisha is popular worldwide to be the center for many artisans and workshops that still practice making traditional appliqué items. Appliqué shamiana or tents of Aligarh, Daraz appliqué of Lucknow, Tharu appliqué of UP, Uttarakhand and Bihar, Khatwa appliqué of Bihar, Katab appliqué of Bhuj are also worldwide popular.

Types of applique work

1 Shamiana appliqué

Shamiana appliqué is a traditional art form that originated in the Indian subcontinent, specifically in the northern region of India and Pakistan. The word "shamiana" is derived from the Persian word "shamshir", which means "tent". The technique is traditionally used to decorate tents and other forms of temporary structures, such as canopies, used for festivals and ceremonies. The origins of shamiana appliqué can be traced back to the Mughal Empire, which ruled over much of the Indian subcontinentfrom the 16th to the 18th century. During this time, the Mughals brought a great deal of artistic and architectural influence to the region, and many of the techniques and styles used in shamiana appliqué today can be traced back to this period. The traditional technique of shamiana appliqué involves cutting out pieces of fabric and sewing them onto a background fabric to create a design. The fabrics used can vary, but they are often lightweight and brightly colored, such as silk, chiffon, and cotton. The designs are typically very detailed and can include a wide range of different elements, including geometric patterns, floral designs, and religious symbols.

2 Tharu Appliqué of Terai Region in India and Nepal

Tharu appliqué is a traditional art form that has been passed down through generations of the Tharu people in Nepal and India. The Tharu are an indigenous group who have lived in the Terai region of Nepal and Uttar Pradesh, Uttarakhand and Bihar region of India, for centuries. They have a rich cultural heritage that is reflected in their art and crafts, and appliqué is one of their most well-known forms of expression. Appliqué is a technique

© NIMI NOT TO BE REPUBLISHED

in which pieces of fabric are cut out and sewn onto a background fabric to create a design. The Tharu use this technique to create intricate and colorful designs on clothing, bags, and other items. They use a variety of different fabrics, including cotton, silk, and satin, and they often incorporate traditional symbols and patterns into their designs. One of the most distinctive features of Tharu appliqué is the use of bright, bold colors. The Tharu use a wide range of colors, including red, orange, yellow, green, blue, and purple. They often combine different colors in a single design to create a striking and vibrant effect.

Examples of items made using applique method:

- Quilts
- Clothing such as shirts, dresses, and jackets
- Handbags and purses
- Wall hangings and tapestries
- Home decor items such as cushion covers and table runners
- Hats and caps
- Scarves and shawls
- Embellished jeans and denim jackets

3 Raw edge appliqué

One of the most popular methods of appliqué is the raw edge technique. The raw edge technique is known for its unique and artistic look. The fabric pieces are cut into various shapes, and then attached to the background fabric without any additional stitching to cover the edges. This creates a layered and textured look that can add visual interest to any item. However, it is important to note that the raw edge technique is not suitable for items that will be washed regularly or used daily. The reason for this is that the raw edges of the smaller fabrics are notse an over, which means that they are not as strong as the rest of the item. This makes them more prone to tearing or fraying over time.

4 Smooth edge applique

Smooth edge appliqué is a popular method of adding decorative elements to a wide range of items. Unlike raw edge appliqué, in this method, the raw edges of the smaller fabrics are covered by a decorative hand or machine stitches. This creates a polished and finished look that is more suitable for items that will be used regularly or washed frequently. This method is commonly used on garments such as shirts, dresses, and jackets, as well as home decor items like cushions, bed sheets, blankets, and pouches. The decorative stitching not only adds visual interest to the item but also strengthens the smaller patches and prevents them from fraying or tearing.

Hand stitches to cover the raw edge of this applique

Button-hole stitch

Satin stitch Straight

Stitch Chain stitch

Hem stitch

5 Machine stitches for applique

Machine stitches are a great option for appliqué as they offer a wide range of options and can add a professional touch to the finished product. When it comes to machine stitches for appliqué, there are several options to choose from, each with its own unique look and purpose. One popular option is the zigzag stitch. This is a versatile stitch that can be used to finish raw edges, as well as add decorative elements. The zigzag stitch can be adjusted to different widths and lengths, which makes it a great option for a wide range of fabrics.

6 Reverse applique

Reverse Appliqué is a unique and creative method of adding decorative elements to a variety of items. Instead of sewing patches onto the background fabric, fabrics are layered together and a pattern is stitched on the top layer. The top layer is then cut away according to the desired shape, revealing the layer of fabric that was underneath. This technique is often used to create intricate and detailed designs, as it allows for a high level of precision and control when cutting away the top layer of fabric. The technique is best used on medium-weight fabrics, as the layers of fabric can be more difficult to manage on lightweight or heavy fabrics.

NOT TO BE REPUBLISHED

Fabric Styling

At the end of this lesson, you shall be able to

- introduction of fabric styling
- types of fabric styling

Introduction

The Fabric Styling program brings together the worlds of styling, trend forecasting, and related industries such as product development, branding, image consulting, and art direction.

Stylists are the vital link between concept, design, presentation, and finished product.

Types of fabric styling or embellishment techniques in sewing and crafts:

1 Quilting
2 Applique
3 Patchwork
4 Trimming
5 Lacework
6 Piping
7 Embroidery
8 Batik
9 Smocking
10 Beads

1 Quilting

Quilting is the technique of embellishing fabrics stitching together, by hand or machine, multiple layers of fabric with a filling of cotton, foam or polyester batting in between the layers. Quilting is widely used for making bedspreads, quilts, comforters etc. Signal needle hand guided quilting machine are used for making out line quilting.

2 Applique

In appliqué, small pieces of fabric or other material are couched or stitched onto a base fabric. In reverse appliqué, the base fabric is on top of the stitched fabric and the top fabric is cut out to reveal the appliqué fabric underneath.

3 Patchwork

Patchwork, used mostly for making bed quilts and cushions, is the technique of creating a fabric layer by joining small pieces of fabric (traditionally scraps of old clothes or textiles) in geometric or abstract patterns. Being a hand-worked technique, it is mostly produced on a small scale.

4 Trimming

Two types of trimmings are most popularly applied on fabric or garments for decoration. Such as

- **Fringe trim:** Fringe is an ornamental textile trim, applied to an edge of an item, such as drapery, dress ends, a flag, epaulettes, or decorative tassel, etc.
- **Sewing trim:** Sewing Trim or trimming in clothing and home decorating is applied to ornament or Embellishing fabrics such as gimp, ribbon, ruffles and button.

5 Lacework

Lace is an openwork fabric, patterned with open holes in the work, made by machine or by hand. Lace is another Embellishing items on fabric. It is the very common and ancient craft to Embellishing fabrics.

6 Piping

Piping is a type of trim or embellishment, which is used to Embellishing fabrics for making different style line. Usually the fabric strip is cut on the bias, and often it is folded over a cord. It may be made from either self-fabric same or contrasting fabric, or of leather.

© NIMI NOT TO BE REPUBLISHED

7 Embroidery

Fabric embellishment with stitches in yarn or thread, using a needle, is one of the oldest forms of art.

8 Batik

Batik is a cloth that is traditionally made using a manual wax-resist dyeing technique. For Embellishing fabrics batik is the very popular embellishment technique.

9 Smocking

Smocking is an embroidery technique, used to gather fabric so that it can stretch. Before elastic, smocking was commonly used in cuffs, bodices, and necklines in garments, where buttons were undesirable.

10 Beads

Beards are other types of embellishment. Beadwork is made by needle and thread to stitch beads to Embellishing fabrics, suede, or leather.

Some other embellishment items that are used on garments for enrich beauty. For example:

- Buttons
- Zippers
- Buckles
- Grommets
- Sequins

© NIMI NOT TO BE REPUBLISHED

MODULE 3: Fashion Illustration

LESSON 5 - 8 : Introduction to Fashion Studies

Objectives

At the end of this lesson, you shall be able to

- about fashion & it's terminologies
- fashion life cycle & fashion markets
- theories of fashion &fashion forecasting.

Introduction of fashion: The purpose of the course 'Fashion Studies' is to tell the students about the fundamentals of fashion design. Fashion Design as a profession includes the entire process of designing and producing fashion apparels from the fibre and yarn stage to the finished product. The course will give an overview of fashion design and elaborate on different aspects like elements of design, history of fashion, fabrics, and understanding of the body, pattern development and garment construction

Definition of fashion: 'Fashion' is a term used interchangeably to describe the creation of clothing, footwear, accessories, cosmetics, and jewellery of different cultural aesthetics and their mix and match into outfits that depict distinctive ways of dressing (styles and trends) as signifiers of social status, self-expression, and group belonging. As a multifaceted term, fashion describes an industry, styles, aesthetics, and trends.

Terminologies of fashion

Fashion terminology is the vocabulary for the words used in fashion industry.Some more common terminology is as below:

1 **Accessories -** In fashion, accessories refer to items with a useful or decorative purpose used with one's outfit. They complement and enhance the clothes worn. Examples - Belts & Suspenders, Bridal Veils, Eyewear, Footwear, Gloves & Mittens, Handbags, Handkerchiefs, Headwear, Jewelry, Legwear, Neckwear, Shawls & Wraps, Umbrellas, and Watches etc.

2 **Acid wash -** Treatment done on fabric to fade the colour with bleach solution.

3 **Active sportswear -** Clothes worn by the participants in sports events.

4 **Achromatic colours -** This refers to having no colour; in fashion, it means black or white colours.

5 **Accoutrements -** A popular or the latest style of clothing, hair, decoration, or behavior.

6 **Anime -** Anime is short for animation and refers to a dressing style that follows the fashion on Japanese Anime cartoons. Mostly features punk style clothing.

7 **Anti-Fashion -** Dressing in styles different from the fashion of the day; showing an indifference to fashion and its varying trends. Other terms used synonymously are anti-establishment, edgy fashion, alternate fashion, counterculture, and counterfashion.

8 **Apparel -** Another word for clothes, clothing and garments.

9 **Apparel manufacturing -** Involves assembling, cutting, finishing, grading, labeling, marketing of garments in an industrial set up.

10 **Athletic clothing -** Clothing worn for athletic activities. Brands like Puma specialize in athletic clothing.

11 **Bespoke -** This refers to a made-to-order garment made as per the customer's characteristic measurements and specifications. Usually said about men's formal clothes or wedding clothes.

12 **Beachwear -** Clothing suitable for beach.

13 **Bling -** The term used for flashy ostentatious accessories.

14 **Boutique -** A store or shop (usually high end expensive store) selling unique items to a specific set of customers.

15 **Cut of a garment -** Style and shape of a garment and how it hangs on the body.

NOT TO BE REPUBLISHED © NIMI

16 **Care label -** A mandatory label found in all clothes that denotes at least one method of caring for that garment/ fabric in lieu of symbols. They usually have fabric details, its content, washing drying, bleaching and ironing instructions.

17 **Casual wear -** Informal wear; everyday garments.

18 **Collection -** Usually held twice a year in spring/summer and fall/ winter.

19 **Draping -** The way a fabric falls/hangs on a body.

20 **Design elements -** In fashion, this refers to Color, Shape, line, texture, balance, harmony, proportion, pattern etc which are very important in designing well-liked clothes.

21 **Double Denim Trend -** This is a style of wearing more than one clothing in denim at a time Eg. Denim Jacket with denim jeans. Also referred to as Canadian Tuxedo.

22 **Electric colours -** Brilliant colours.

23 **Embellishing -** The addition of decorative details or features.

24 **Designer -** A person who thinks up ideas for making very characteristic garments.

25 **Empire waist -** A dress or blouse that has a fitted waistline that is placed directly below the bust has an empire waist.

26 **Fabric swatches -** Small pieces of fabric used as a sample.

27 **Fabric finishes -** This refers to the application of certain resins/chemicals or making the fabric undergoes some processes so that its functional or aesthetic appeal is enhanced.

28 **Fad-** A short lived fashion; the popularity fades pretty fast after a burst.

29 **Fashion -** Fashion in the digital age with social media and websites leading the way for major upheavals in fashion.

30 **Fashion capitals -** Refers to high fashion cities like Paris, New York, Los Angels, London, Tokyo, Berlin, and Barcelona.

31 **Fashion cycle -** This refers to the rise rule and decline of a style.

32 **Fashion forecast -** A prediction as to the fashions / styles/ trends that will be popular in the coming future.

33 **Fashion show -** Displaying Formal collection of fashion styles by designers to merchandisers/ customers.

34 **Fashion house -** A company involved in fashion design.

35 **Fashion sketch -** An initial drawing made for the purpose of garment design. It will give a basic idea about the garment.

36 **Fashion label -** A collection of expensive clothes belonging to a particular upcoming designer.

37 **Flat sketches -** Technical sketch of a design as if it were lying flat- the details include stitching techniques etc. Also called flats.You can make this by hand or with software like illustrator.

38 **Haute couture -** Expensive, fashionable clothes produced by leading exclusive fashion houses. It means the finest dress making in French language; simply termed as 'couture' pronounced kü-ˈtu̇r. Learn more about Haute Couture.

39 **High fashion -** The designing, making, and marketing of expensive, fashionable exclusive clothes (as opposed to mass-market clothing); haute couture

40 **Line sheet -** A reference guide used by people connected with fashion detailing garment styles price, colour, fabric details etc related to a line.

41 **Marine style -** A style that looks like the clothing of sailors

42 **Mass produced / fashion -** Styles/ fashion that is widely accepted and hence made in large quantities

43 **Mood board -** A physical or digital collage of design ideas used by fashion designers to consolidate their collections or get ideas. Will have details of an idea, drawings or photos, fabric swatches etc.

44 **Motif -** A design used in a pattern/ print / embroidery etc ; usually found recurring

45 **Pattern -** A template used as a guide to make a garment.

46 **Pret-a--porter -** Refers to ready to wear clothes by designers.

47 **Peek-a-boo style -** Refers to adding cut out details or sheer elements in garments which reveals parts of the body. Read about making peek-a-boo cut outs in this post.

© NIMI NOT TO BE REPUBLISHED

48 **Pre-spring collection -** This refers to high-end collections of fashion designers marketed to upscale stores for customers expecting to spend the post-holiday season in warm-weather climates.

49 **Print on print -** Colourful and vibrant clothing with lots of different prints mixed in.

50 **Ready to wear or RTW -** This is the term for factory made clothing in standardized sizes.

51 **Sample -** A garment made to be shown to the retailers/merchandisers.

52 **Silhouette -** Outline or shape of a design or garment.

53 **Selvedge -** The finished edge of the fabric (on opposite sides of the lengthwise fabric)

54 **Sulfurized clothing -** A shrink control process used on fabric.

55 **Sportswear -** A casual style of clothing meant for a relaxed look but can be used in a casual business setting too. American style dressing.

56 **Statement jewellery -** Bold and attention grabbing Jewelry meant to grab all eyeballs Statement necklace.

57 **Stylist (Fashion) -** A person who dresses clients in styles that she /he curates. It could be for editorial purposes, for celebrities, for branding purposes in marketing.

58 **Style -** "Fashion is what you're offered four times a year by designers. And style is What you choose." Lauren Hutton

59 **Tailoring -** Making of made to measure/custom made garments

60 **Theme -** This refers to a concept behind a collection of clothes designed by fashion designers – usually they have a message or an attitude

61 **Theme board (mood board) -** A board with fashion drawings, sketches, swatches used to create a mood about a product.

62 **Toile -** This is a piece of clothing made by a fashion designer or a seamstress for testing purposes – it can be made to test a pattern or a design, to see how the garment will look and drape and whether it needs any alterations or additions.

Fashion life cycle

In the world of luxury fashion, everything depends on the fashion cycle. The way of fashion change is described as fashion cycle. Generally fashion cycle is used to explain the process that a type of fashion goes through. It is the amount of time which takes a fashion trend to emerge, peak and fall out of style. At first fashion gains acceptance from the consumers and by the changing of time the tastes and preferences of the consumers would decrease and gradually fashion lose the acceptance. Fashions do not always survive from year to year. Fashion cycles start when fabric manufacturers present their new samples of materials. They offer new colours, new fabric touches, and new designs.

Fashion cycle stages

Fashion moves through different stages during its cycles of existence. Fashion acceptance is generally called as a fashion cycle. The fashion cycle is usually represented as a bell shaped curve with 5 stages. (Fig 1)

1 Introduction

2 Rise in popularity

3 Peak of popularity

4 Decline in popularity

5 Rejection

1 **Introduction stage:** Every fashion designer has each season works on a new collection, interpret their research into apparel. Designs first previewed during fashion weeks at the major design centers. Then designers create new designs by changing elements such as shape, line, colour, fabric, and details and their relationship to one another. In this stage product costs are high and as a result only few consumers can afford it. Production in small quantities gives a designer more freedom, flexibility, and room for creativity. Celebrities, TV stars, models buy these clothes as they want to wear them in some events.

NOT TO BE REPUBLISHED © NIMI

Fig 1

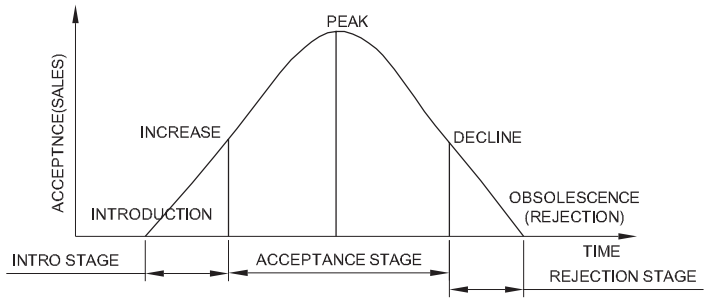

2 **Increase in popularity:** If new styles are seen worn by celebrities or famous personality on TV or magazines it may attract the attention of buyers, the press, and the public. In this case viewers become interest to purchase to buy the new styles. Some designers or stylists may modify or copy a popular style. Manufactures use less expensive fabric and modify the designs to sell in low price. Mass production reduces the price of the fashion, and become more sales.

3 **Peak of popularity:** Fashion at this stage is most popular; it may be in such demand that many garment manufacturers copy it or produce adaptations of it at many price levels. It can survive longer if the fashion becomes a classic. In this stage manufacturers carefully study trends because the consumer will always prefer clothes that are in the main stream of fashion.

4 **Decline in popularity:** In this stage, consumer demand is decreasing, going down the slope. Many copies are mass produced that fashion as a result consumer get tired of the style and begin to look for new styles. Fashion items available have saturated the market. They are not willingly to buy with regular price.

5 **Rejection of a style or obsolescence:** It is the last stage of fashion cycle. Consumers are no longer interested in the fashion. In this phase of fashion cycle, some consumers have already turned for new styles, thus beginning a new cycle. Price of the fashion product may be low at this point, but consumers may not buy the product. The rejection of a style just because it is out of fashion is called consumer obsolescence.

Types of fashion markets

The Fashion pyramid is a market segmentation pyramid that segregates fashion brands based on price, quality and creativity. The higher the segmentation level, the higher are those characteristics in this brand. The five levels of fashion segmentation are Haute Couture, Ready-to-Wear (RTW), Diffusion, Bridge and Mass Market. (Fig 2)

1 **Haute Couture:** The top, luxury brands, high fashion pieces of art.

2 **Ready-to-wear:** Designer brands.

3 **Diffusion:** Designer and premium brands.

4 **Bridge:** Premium brands

5 **Mass fashion:** Common or General or Average brands

Fig 2

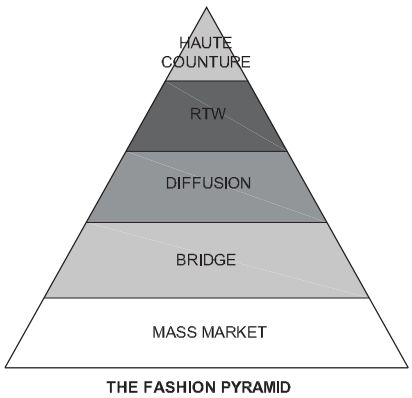

© NIMI NOT TO BE REPUBLISHED

Description of fashion markets

1 **Haute couture:** At the top of the fashion pyramid comes haute couture. These are exclusive, made-to-measure pieces, characterized by a high level of craftsmanship and attention to detail. They are not addressing a large audience, but rather select few clients and are considered like pieces of art.

Price: Most expensive, it could be 10 times higher than the average market price.

Creativity: Maximum level always made to measure.

Use: Mainly special occasion especially in the evening.

Target: Very few people,celebrities,international clients.

Idea: Build the image of the brand sell the dream.

Companies

- Chanel
- Dior
- Ellie Saab
- Givenchy

2 **Ready-to-wear:** Ready to wear, also called as 'pret-a-porter' (invented by Italian companies) .Ready-to-wear come in more standardized sizes, as opposed to the made-to-measure pieces from haute couture. They are still characterized by a high degree of creativity that often embodies the vision of the designer.

Price: High price 5to3 times higher than the average market price.

Creativity: High level of creativity, designer expressions through the fashion show.

Use: Wider occasion of use from daily to important events.

Target: Wider selection of people, celebrities, international clients.

Idea: Develop the image of brand.

Companies

- Ralph Lauren
- Chanel
- Dior
- Saint Laurent

3 **Diffusion or second young lines:** Diffusion brands are inspired by Ready-to-Wear but intend to appeal to a much wider audience at lower price points, although the price is still at a high level. They are more casual pieces and have a younger target demographic. (Mostly are American and Italian companies).

Price: Priced 2to3 times higher than the average market price.

Creativity: Inspired from ready –to-wear.

Use: Casual sportier (denim, t-shirts, sneakers).

Target: Younger audience, wider than RTW,mix of retail and wholesale distribution.

Idea: Expand the target audience.

Companies

- See for Chloe
- Versus for Versace
- DKNY for Donna Karan

4 **Bridge Fashion/High end Fashion:** Bridge brands, as the name suggests, intend to bridge the gap between high end and mass market. They address people who are ready to pay up for the right level of quality.(Born in the USA with department stores)

© NIMI NOT TO BE REPUBLISHED

Price: Right value for money 2to5 times higher than the average market price.

Creativity: Trendy not too radical/extreme products.

Use: Mainly daily occasions.

Target: Usually a mix of wholesale and retail distribution. Both international and local brands with local customers.

Idea: Connecting the high end to mass market, Right marketing mix(Product, communication service)

Companies

- Max And Co
- Diesels
- Cooch
- Massimo Dutli

5 **Mass Market/Value fashion :** At the very bottom of the fashion pyramid comes the mass-market segment. This is intended to reach the maximum number of people, by providing trendy fashion at affordable retail prices.

Price: Below the average market price.

Creativity: Basics or fashionable items depend on BM.

Use: Different Occasions.

Target: Different target from teenagers to sophisticated women.

Idea: Supply chain management is key segmentation is the new trend massive communication role of the store.

Companies

- Zara
- H&M
- Inditex
- Mango

Theories of fashion

The distribution of fashion has been described as a movement, a flow, or trickle from one element of society to another. The diffusion of influences from center to periphery may be conceived of in hierarchical or in horizontal terms, such as the trickle-down, trickle-across, or trickle-up theories.

Trickle down theory

The oldest theory of distribution is the trickle-down theory described by Veblen in 1899. To function, this trickle-down movement depends upon a hierarchical society and a striving for upward mobility among the various social strata.

This distribution model assumes a social hierarchy in which people seek to identify with the affluent and those at the top seek both distinction and, eventually, distance from those socially below them. Fashion is considered a vehicle of conspicuous consumption and upward mobility for those seeking to copy styles of dress.

Trickle across fashion

Proponents of the trickle-across theory claim that fashion moves horizontally between groups on similar social levels. In the trickle-across model, there is little lag time between adoptions from one group to another. Evidence for this theory occurs when designers show a look simultaneously at prices ranging from the high end to lower end ready-to-wear.

Trickle up theory

The trickle-up or bubble-up pattern is the newest of the fashion movement theories. In this theory the innovation is initiated from the street, so to speak, and adopted from lower income groups. The innovation eventually flows to upper-income groups; thus the movement is from the bottom up.

© NIMI NOT TO BE REPUBLISHED

Fashion forecasting

Predicting what new fashions will come in the future by observing past fashion trends is called fashion forecasting. Through this, it is known what new designs will come in the future. For this reason, this forecasting is done by considering various situations including future trends, people's demands.

Types of fashion forecasting

There are generally two types of fashion forecasting.

1 Short term Forecasting

2 Long term Forecasting

1 **Short term forecasting:** Short term forecasting is usually done for one or two years. What kind of colour will come in fashion, what style will be accepted as fashion is known through this forecasting. It is considered as an internal business matter. Short term forecasting is made based on recent trends.

2 **Long term Forecasting:** Long term forecasting is done for a period of 5 years or more. Such forecasting is done in fashion industry direction design, production. In this case, more attention is paid to political, economic and technology.

Fashion trend forecasting agencies

- Heuritech
- WGSN
- Trend zoom
- Trend stop
- Fashion Snoops
- Pattern bank
- Trend council
- F-trend
- ModaCable
- Eclectic trends

The purpose of fashion forecasting

- Fashion designers do long term and short term forecasting to maintain fashion in the market.
- Executives use forecasting for planning.
- Fashion forecasting techniques are used to assess competitors' market position, market share and develop competitive strategies.
- Production developers, managers prepare collections using trend forecasts of color, style direction.
- One of its main objectives is to innovate something new in the future from the past trend.

Steps of developing fashion forecasting

1 Past analysis should be done.

2 Research should be done on the fashion of the past.

3 Determining the reasons why past fashions changed. For example: finding out the reason why blue colour is running even though red colour is forecasted.

4 Determining how closely the forecast matches the past.

5 Researching how likely fashion will impact the future.

6 Applying fashion forecasting techniques.

7 Monitor regularly and check if it recedes.

8 And lastly revise again and again.

© NIMI NOT TO BE REPUBLISHED

Introduction to Elements of Design

At the end of this lesson, you shall be able to

- elements and Principles of Design
- fundamentals of Colour
- concept of Mood Board and Swatch Board Development
- various Trims and Accessories.

Introduction to Element of Design

Design elements are the basic units of any visual design which form its structure and convey visual messages. The elements of design are dots,line, shape or form, space, texture and color.

Dot

Dots can also be looked at small, round marks that can create texture, patterns, and shapes. Dots can be used as a design to add interest and detail clothing.

Lines

Various types of lines are used in design. Such as horizontal, vertical, diagonal, zigzag, broken, dotted, curved, spiral etc.

Shape/Form

A shape is a two dimensional area that stands out from the space around it due to variations in contour, colour or material.

Texture

Textures in design are both visual and tactile. Textures are widely imparted in fashion in the form of prints, weaves, and other surface embellishments. This is of two types. Visual and Tactile Texture.

Colour

Colours decide the mood depending on the combination. Warm colours consists of shades obtained from red, yellow and orange. Cool colours include those obtained from blue, green and purple. Tints and shades of black and white from the neutral colour range.

Space

Space is a three dimensional volume that can be empty or filled with objects. It has width, height and depth. Space is of two types-Negative space and Positive space

Principle of Design

The principles of design describe the ways that artists use the elements of art in a work of art. These are as below:

1 Emphasis

2 Balance

3 Contrast

4 Repetation

5 Proportion

6 Movement

7 Unity

8 Hormony

9 Rhythm

10 Variety

© NIMI NOT TO BE REPUBLISHED

1 Emphasis

Emphasis also known as the center of interest, focal point, and' dominant idea'' in the design. Emphasis centers attention on the most important item in an arrangement and allows rhythm to carry the eye from this point to other areas of interest.

2 **Balance**

The arranging of design parts to create a feeling of rest and equilbrium.Balance produces a sense of equality between opposite elements.Two types are as follow:

Formal Balance (symmetrical): The design is the same on each side of the design centre.

Informal Balance (asymmetrical): The design is balanced but is different on each side of the design centre.

3 Contrast

When one thing is different from other thing in a same composition is called contrast.Contrast can be obtained by different colors(black and white)different shapes(square and circle)etc.

4 Repetition

Repeated use of a shape,color, or other art element or design in a work can help unify different parts into a whole. Repeating design , shapes, pattern, or texture.

5 Proportion / Scale

Proportion is the relationship of parts to each other and to the design as a whole based on division of space. Scale is the law of proportion when applied to the size relationship of objects used together.Elements seem to be an appropriate size for the space they fill. Proportions in design indicate the relativity size/quantity of various elements.

6 Movement

Movement is the path your eyes fallow along edges,lines and shapes, often leading your gaze around the composition and directing you to the focal area of the art work.

7 Unity

when things look right together, you have created unity or harmony. Lines and shapes that repeat each other show unity (curved lines with curved shapes). Colors that have a common hue are harmonious. Texture also helps create unity.

8 Harmony

The combination of unity and variety. All parts of the room or garment work together to create a pleasing, whole design.Harmony is achieved through variety and unity of various elements like colour, shapes etc.

9 Variety

Variety is the usage of differnt elements of design, often emphasizing contrasting elements.

10 Pattern

Pattern as a principle of design may be defined as regular arrangement of repeated same element i.e. line, shape, colors over and over again. Pattern usually increases the visual excitement by supplementing surface interest.

Fundamental & Basics of Color (Fig 1)

Primary Colors : Red, Yellow, Blue. Three

Secondary Colors : Orange, Green, Violet.

Six Tertiary Colors : Red-Orange, Yellow-Orange, Yellow-Green, Blue-Green, Blue-Violet, Red Violet, which are formed by mixing a primary with a secondary.

© NIMI NOT TO BE REPUBLISHED

Fig 1

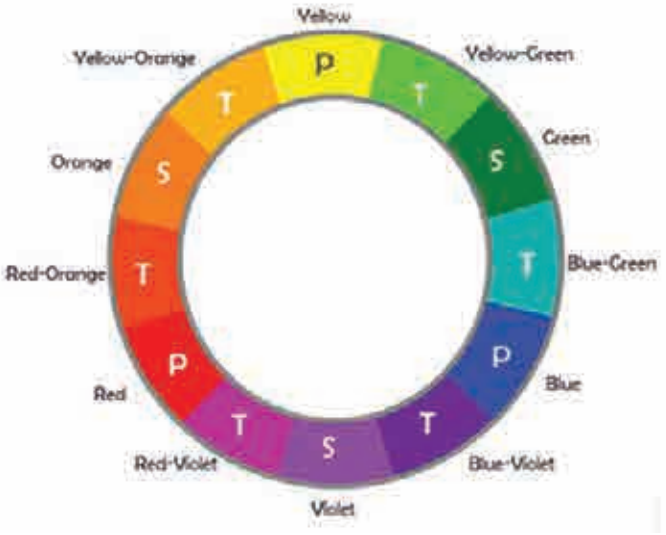

Fig 2

Color Wheel

There are 12 main colors on the color wheel. In the RGB color wheel, these hues are red, orange, yellow, chartreuse green, green, spring green, cyan, azure, blue, violet, magenta and rose. The color wheel can be divided into primary, secondary and tertiary colors. (Fig 2)

1 Primary Color

Using this color wheel as an example, it can be read as follows: Three Primary Colors (Ps): Red, Yellow, Blue. A set of primary colors or primary colours consists of colorants or colored lights that can be mixed in varying amounts to produce a gamut of colors. This is the essential method used to create the perception of a broad range of colors in, e.g., electronic displays, color printing, and paintings.

2 Secondary Color

Orange, Green, Violet are the three secondary colors. These are color combinations created by the equal mixture of two primary colors. On the color wheel,secondary color are located between primary colors. According to traditional color wheel, red and yellow make orange, red and blue make purple, and blue and yellow make green.

3 Tertiary Color

Six Tertiary color : Red-orange, yellow- orange, yellow-green, blue- green, blue-violet, red- violet, which are formed by mixing a primary with a secondary.

Grey Scale

The contrast ranges from black at the weakest intensity to white at the strongest . A series of regularly spaced tones ranging from black to white through intermediate shades of gray.A gray scale (or gray level) image is simply one in which the only colors are shades of gray.

Tints and Shades

Tint is the whiteness of a hue or colour. Shade is the blackness or darkness of a hue or coulor.

Gradation

Gradation refers to a design pattern that gradually increases or decreases in size, shape, or color. An example is when designers use a gradient-dying technique called ombre that uses a gradual change in color from light to dark across the textile.

Color Schemes

A color schemes is an important part of any creative project, form graphic design to fashion not only does it add visual interest, but it also helps to communication a massage and create the desired mood or atmosphere.

© NIMI NOT TO BE REPUBLISHED

Color Interaction

Every color is seen in relationship to another color. When you see two or more colour together they have a profound effect on one another. The study of colour interaction helps us understand and predict how a colour will be influenced by its surroundings.

Concept and Mood Board Development

A mood is a visual tool that conveys what is felt about a particular design idea. It can be a collection of image, videos, texts and other visual elements. In comparison, a concept board provides the starting point far a creative process. Mood boards are generally more common in designing.

Story Board

A storyboard is a visual representation of you presentation that allows you to outline the content, structure and flow of your presentation.

Inspiration Sheet

An inspiration board is a tool that creatives like artists, fashion designers , and even communication experts use to explore their inventive idea and build a unique visual world.

Swatch Board Development

Swatch board are very similar to mood boards, but are more generated towards the reality of the space. Mood boards are an effective and engaging way to see concept that will lead to other conversations and envolve the design forward.

Specification Sheet

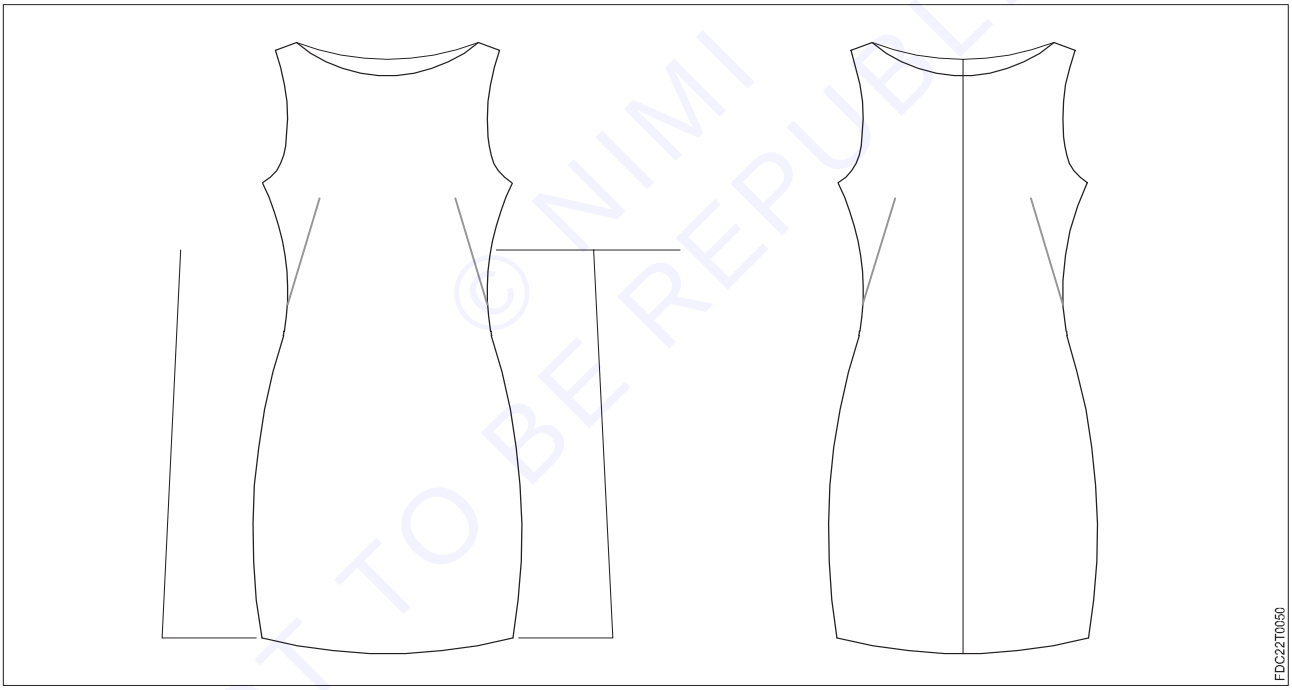

A garment specification (spec) sheet,or measurement table, is a technical document that contains all construction details of the garment.It looks like a technical diagram or a sketch of a garment, including all of its measurements. Spec sheets are used by designers to communicate design concepts to manufacturers.

Specification Sheet

Various Trims and Accessories

Trims

Trims are those items that are fixed with a garment and part& parcel of that garment. Examples Button, zipper velcro, linin, sewing thread, elastic, etc.

Accessories

Accessories are such items that are not part & parcel of the garment but are required for the finishing, complement of look or marketing of garment.Examples- Belts, hats, scarf, motifs, watches, sunlasses bows and ties etc.

© NIMI NOT TO BE REPUBLISHED

LESSON 9-11 : Basic knowledge of Various Garment Details

Objectives

At the end of this lesson, you shall be able to

- about various garment details
- different types of fabrics
- fashion illustration.

Neckline

Neckline -A neckline is the part of bodice around the neck. It can be of various shapes and sizes.

Type of necklines

1 Asymmetrical

An asymmetrical neckline does not mirror the other side. It is commonly combined with higher necklines to create cut-out shapes around the collarbone. (Fig 1)

2 Boat neckline

The boat neckline, also known as a bateau, sits under the collarbone, highlighting the shoulders and neck. A boat neckline can make narrow shoulders look broader and wide hips more balanced. (Fig 2)

Fig 1

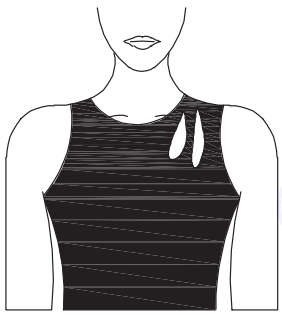

ASYMMETRICAL

Fig 2

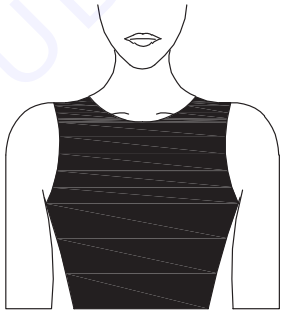

BOAT NECK

FDC22T0051

3 V-neck

A V-neck is made up of two lines dipping down into the shape of a “V.” This neckline is very flattering for many body shapes and is seen a lot in men’s fashion, also.V-necks can be found on knitted jumpers, vests, t-shirts, dresses, and sing lets. (Fig 3)

4 Cowl neck

A cowl neck is a flattering neckline made up of loosely draped fabric that hangs around your neck or collarbone. Cowl necks are constructed during the pattern drafting stage by widening the neckline edge, almost like a paper fan. The excess fabric drapes into a cowl neck when the garment is worn.This neckline is suitable for woven, stretch and knit fabrics. (Fig 4)

Fig 3

V - NECK

Fig 4

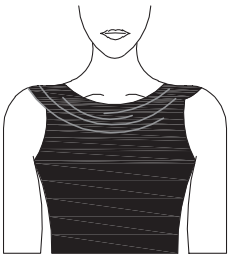

COWL

FDC22T0052

© NIMI NOT TO BE REPUBLISHED

5 Halter neckline

A halter neck is a type of strap neckline that ties behind the back of the neck. This neckline can be seen on crop tops, dresses, swimwear, jumpsuits and even lingerie. (Fig 5)

6 Turtleneck or High Neckline

A turtleneck or high neckline wraps around the neck and sits below the chin.This neckline is often used on jumpers, knits, and sweater dresses. (Fig 6)

Fig 5

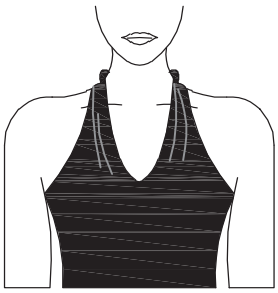

HALTER

Fig 6

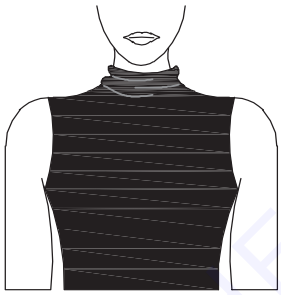

TURTLENECK

FDC22T0053

7 Jewel

A jewel neckline is a simple round shape that sits close to the collarbone. This neckline is commonly seen in business attire on dresses, sleeveless chiffon tops, and blouses.(Fig 7)

8 Keyhole neckline

A keyhole neckline is a small slit or keyhole located at the front of a blouse or top. There can be both big and small keyholes. Many peasant blouses feature open keyhole necklines with ties or neck ruffles. (Fig 8)

Fig 7

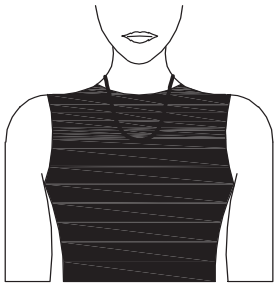

JEWEL

Fig 8

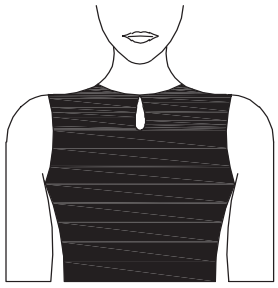

KEYHOLE

FDC22T0054

9 Off-the-shoulder

The off-the-shoulder neckline sits across the top of the chest from shoulder to shoulder.(Fig 9)

10 One shoulder

This style can be curved or kept straight across the chest to under the arm. Depending on the type of garment, one-shoulder pieces can be sleeveless or have a long sleeve. This neckline suits being paired with a choker or short chain necklace. This neckline style is often seen in formal or evening wear, jumpsuits, going-out tops, dresses, and swimwear. (Fig 10)

Fig 9

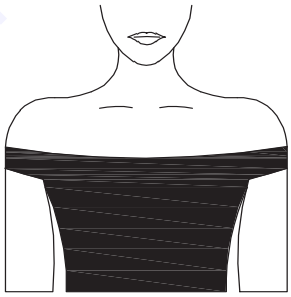

OFF-THE-SHOULDER

Fig 10

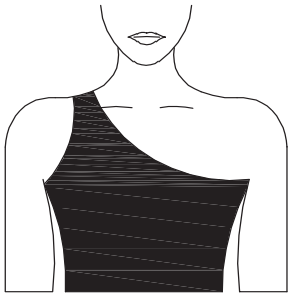

ONE-SHOULDER

FDC22T0055

© NIMI NOT TO BE REPUBLISHED

11 Round neck or Crew neck

As the name suggests, the round neck or crew neck is a simple, rounded shape. This style neckline is trendy and commonly seen on t-shirts and other clothing.(Fig 11)

12 Scalloped neckline

A scalloped neckline consists of convex curves around the neck. The neckline can be shaped in a V-neck, round, scooped, one-shoulder or plunging style. It is best constructed from sturdier, woven fabrics or with interfacing to help keep the curved shapes in place. (Fig 12)

Fig 11

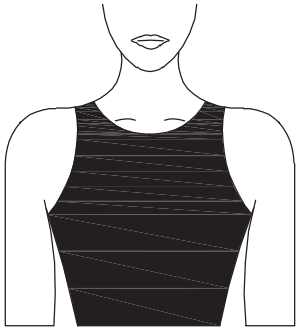

ROUND NECK

Fig 12

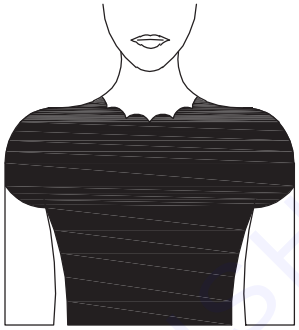

SCALLOPED

FDC22T0056

13 Square neck

A square neckline adds a lovely contrast to curves and elongates a short neck and narrow shoulders. This neckline can work well for bigger or smaller busts.(Fig 13)

14 Scoop neckline

A scoop neckline is like a round neck but is more scooped in shape, making the neckline sit more profound on the chest. A scoop neckline reveals more than a round neck by emphasizing your collarbone area.(Fig 14)

Fig 13

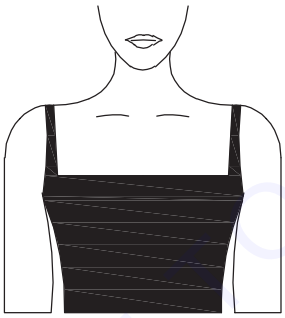

SQUARE NECK

Fig 14

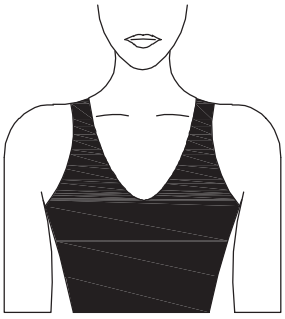

SCOOP

FDC22T0057

15 Sweetheart neckline

The middle of the neckline resembles a slight V-neck, which some designers have emphasized, creating a classic, timeless look.(Fig 15)

Fig 15

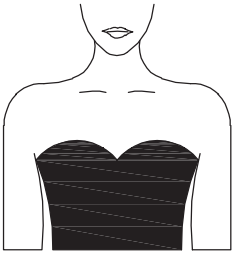

SWEETHEART

FDC22T0058

© NIMI NOT TO BE REPUBLISHED

Collar

Collar

A collar is added to a neckline to enhance its appearance. Collars are made of double layer of fabrics. It also helps to finish the raw edges of the neckline.

Types of Collars

The three basic types are flat, standing and rolled.

1 **Flat –** lies flat and next to the garment at the neckline. When the corners are rounded, they are called Peter Pan.(Fig 1)

2 **Full Roll –** the fall and stand are about the same height at centre back.(Fig 2)

Fig 1

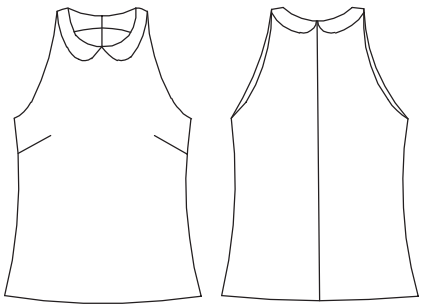

Fig 2

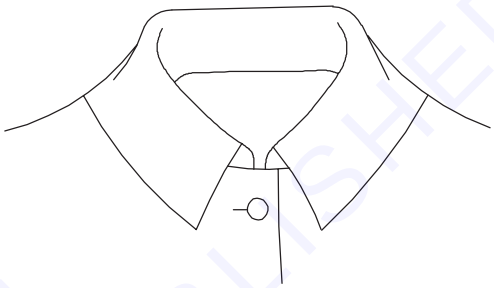

FULL ROLL

FDC22T0059

3 **Partial Roll –** has less stand and more fall.(Fig 3)

Fig 3

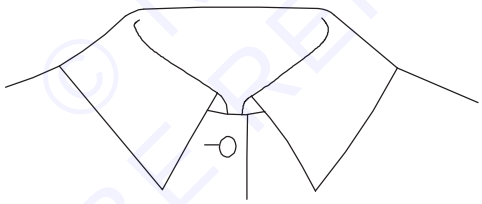

PARTIAL ROLL

FDC22T0060

Other variations of collar are:

1 **Convertible –** It is similar to a full roll, but hugs the neckline closer at the sides of the neck/shoulder.(Fig 4)

2 **Shawl –** It is recognized by its centre back seam. The under collar is cut as part of the bodice.(Fig 5)

Fig 4

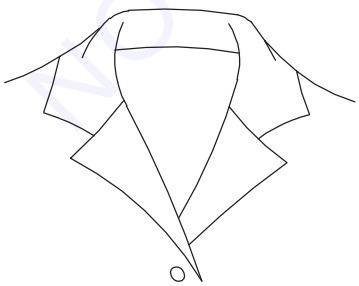

CONVERTIBLE

Fig 5

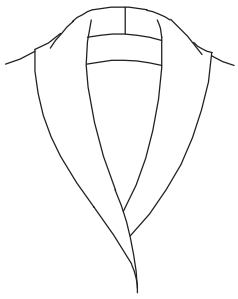

SHAWL

FDC22T0061

© NIMI NOT TO BE REPUBLISHED

3 Mandarin – It is a stand-up collar (all stands and no fall).(Fig 6)

4 Shirt – It has a separate neckband that serves as the stand.(Fig 7)

Fig 6

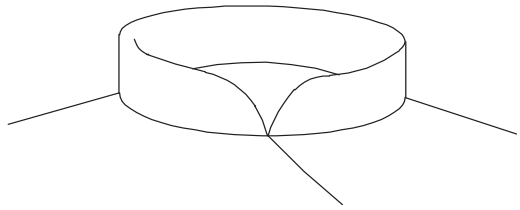

MANDARIN

Fig 7

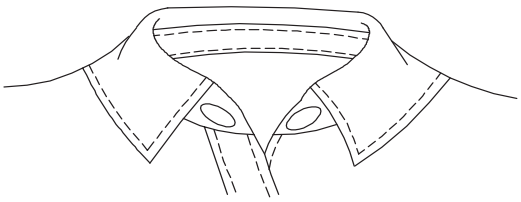

SHIRT

FDC22T0062

5 Round collar or one piece Peter Pan collar

Round collar or one piece Peter Pan collar is mostly used for children's dresses. The front collar continues to the back where it is divided with rounded ends. If this collar pattern is cut at the centre front and back to get two pattern pieces it is called two piece Peter Pan collar. A scalloped collar can also be created by just shaping the collar edges as scallops (Fig 8)

Fig 8

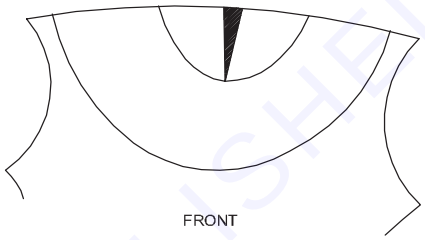

FRONT

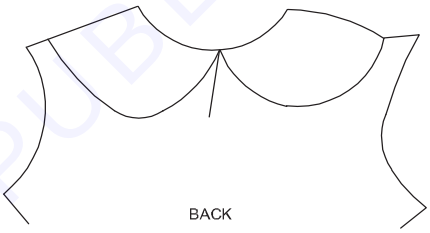

BACK

FDC22T0063

6 Sailor Collar

- Sailor collar is a flat turned down collar. It has a V shape in front and square shape at the back (Fig.9)

7 Shirt Collar

- Shirt collar, as the name indicates it is used in the men's, women's or kid's shirt. Generally, it consists of two parts commonly known as band to hold the other part which is the collar. Sometimes kid's shirt collars are designed without the stand.(Fig 10)

  For shirt collar the seam line are stitched and then the whole collar piece is turned around. The seams are not seen in the finished garment

Fig 9

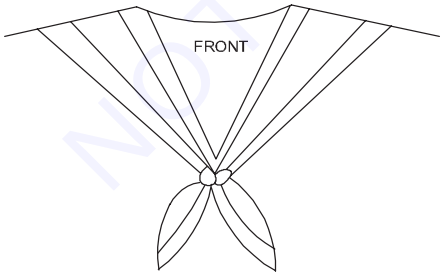

FRONT

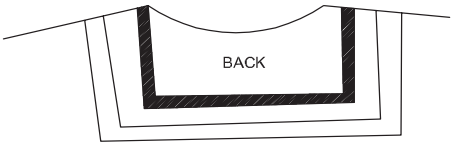

BACK

Fig 10

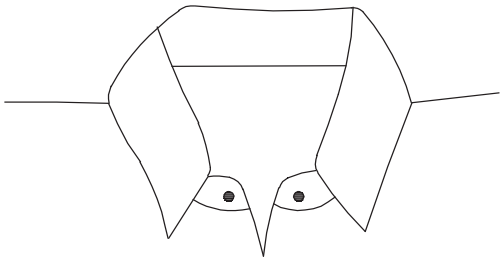

FDC22T0064

© NIMI NOT TO BE REPUBLISHED

SLEEVES

Sleeve is a part of the upper garment. It is attached to bodice at the armhole. There are different types of sleeves. Some are close fitting and others are stitched with fullness. The length of sleeve can be changed to create short, elbow sleeve, three forth sleeve and full sleeves. Sleeves are generally cut along straight grain, but to create variation, it can be cut on cross grain also.

Types of Sleeves

Sleeves vary depending upon type of garment, the fabric used, one's preferences and needs. The length of the sleeve and fullness in sleeves can be altered, to create new designs.

Fig 1

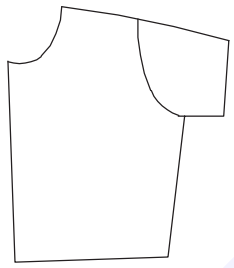

FDC22T0065

1 Plain Sleeve

- This is also known as basic sleeve. It is used in all garments and more popular in sari blouses. It is plain without any fullness (Fig 1)

2 Gathered Sleeves

- Gathered Sleeves is a type of sleeve which is also called puff sleeve. It is mostly used in dresses and women's blouses. It has fullness either at the top edge or at both, the top and bottom of sleeve part. (Fig 2)

3 Bell Sleeves

- Bell sleeve is also prepared with the pattern of the basic sleeve. The pattern is slashed from the bottom edge (and spread) from the bottom edge to the maximum, for extra fullness.(Fig 3)

Fig 2

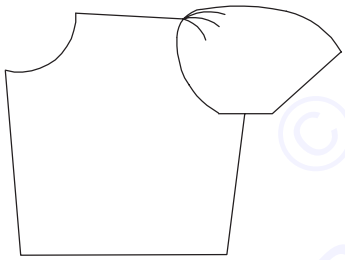

Fig 3

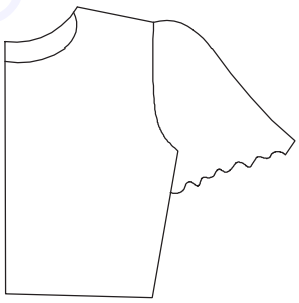

FDC22T0066

4 Leg-o-mutton Sleeve

- Leg -o-mutton sleeve is puffed at the top and the bottom is tight fitted with gathers. It is also prepared with the basic sleeve pattern. The pattern is cut at the middle of the sleeve horizontally; then a vertical slash is made on the top edge and spread apart. (Fig 4).

5 Raglan Sleeve

- Raglan sleeve is mostly used for sports-wear, kids wear, T-shirt. It does not have any armhole seam and shoulder seam.(Fig 5)

Fig 4

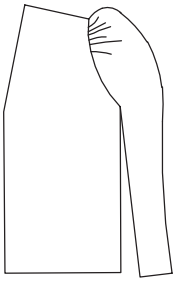

Fig 5

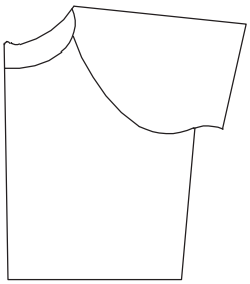

FDC22T0067

© NIMI NOT TO BE REPUBLISHED

6 Kimono Sleeve

- Kimono sleeves are mostly used in garments where more comfort is needed. It is used mostly for sportswear, kids wear, dance costume and ladies tops. In kimono sleeve there is no seam either at the armhole or in the shoulder. (Fig 6)

7 Magyar Sleeve

- Magyar sleeve is also like kimono sleeve where lower arm circumference is drawn perpendicular to the bodice pattern and attached at the edge of the pattern (Fig 7)

Fig 6

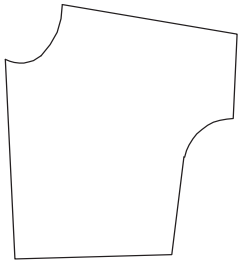

Fig 7

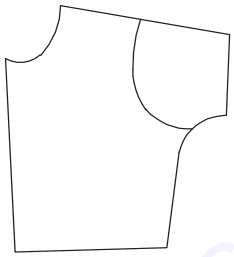

FDC22T0068

8 Full Sleeve

- A full sleeve pattern is an extension of the basic sleeve pattern but the length of the sleeve is extended till the wrist. Full sleeves are used mostly in women's wear, kurtas and men's shirt.

Cuff

A cuff is a sleeve finish given at the sleeve edge. A cuff can be straight, gathered or pleated according to the design of the garment.

1 Cuff with Plackets

Cuff with placket is generally attached to a long sleeve with a placket opening made at the sleeve edge. Thus cuff comes tight around the wrist, with a placket. There are three types of plackets which are commonly used.

- **Faced placket –** The edges of the placket meet at the opening.
- **Continuous bound placket –** It is finished with a single fabric strip to create a narrow lap.
- **Tailored or shirt placket –** It is finished with two separate pieces to create a wider lap.

2 Cuffs without Plackets

Cuffs without plackets have no openings and hence the sleeve openings are loose for the hands to come out easily. There are three basic types of cuffs without plackets.

- **Straight band Cuff –** It is a simple cuff with a straight band of fabric attached at the bottom of the sleeve.
- **Straight turn back Cuff –** It is made by turning up the hem of the sleeve. Sometimes, a separate extension piece is added at the bottom of the sleeve and turned.
- **Shaped turn- back Cuff –** This cuff is first constructed separately with a shape and then the same is stitched to the edge of the sleeve with a facing.

© NIMI NOT TO BE REPUBLISHED

Yokes

Yoke is one segment of the garment that can be constructed on the garment. It is used to hold the gathers. For decorative purpose, it is sewn at shoulder, upper and lower part of the hip. Yokes can be constructed with different structures, variations like 'V' shape, oval shape or with different colour according to the taste and need of person.

Types of Yokes

Yokes are classified based upon the pattern made and decorations as plain or basic yoke and decorative yoke.

Plain / Basic Yoke

It can be placed on front and back part of men's shirt. According to the shape of garment, use of garment, age of person, yokes are suitably cut and joined. This yoke is a part of the garment which is cut and joined with a piping or seam. (Fig 1)

Fig 1

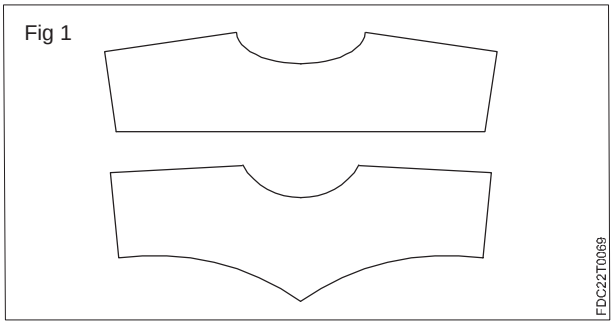

Decorative Yoke

Contrast colour materials can be used for making yoke. Use of various tucks, pleats and frills add interest to the garment. According to the wish of wearer, piping or frills can be stitched at the edges of the yoke.(Fig.2)

Fig 2

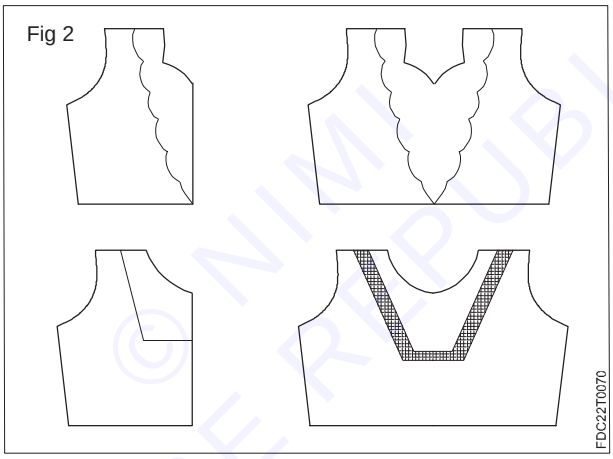

A piece of a garment that is closely fitted, either around the neck and shoulders or at the hips, and from which an unfitted or gathered part of the garment is hung

Types of yoke depending on the location of the yoke in a garment are

1 Shoulder yoke

2 Midriff yoke

3 Skirt yoke

1 Shoulder yoke: A yoke is a small section of pattern around the neck or across the shoulders used to support the lower section of the garment which is usually gathered along the yoke edge.(Fig 3)

Fig 3

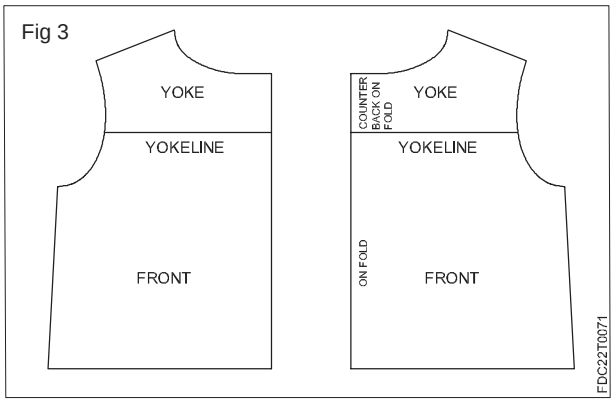

NOT TO BE REPUBLISHED © NIMI

2 **Midriff yoke:** A yoke under the bust above the waist and held in place by a midriff shell. Midriff yoke may appear in all the four shapes. (Fig 4)

3 **Skirt yoke:** A yoke is a fitted band at the top of a skirt that takes the place of a waistband. (Fig 5)

Fig 4

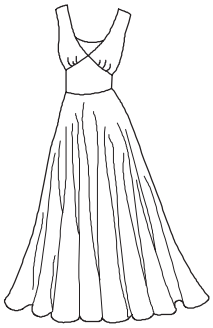

Fig 5

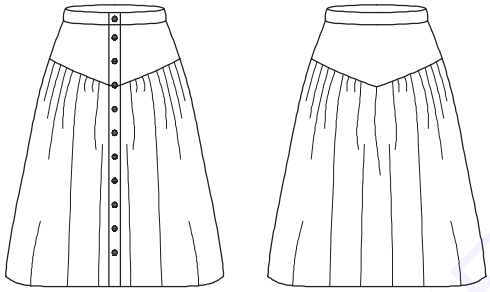

FDC22T0072

Bows and Ties

Bow ties may be made of any fabric material, but most are made from silk, polyester, cotton, or a mixture of fabrics. Some fabrics (e.g., wool or velvet) are much less common for bow ties than for ordinary four-in-hand neckties.

Ties

A necktie, or simply a tie, is a long piece of cloth, worn, usually by men, for decorative purposes around the neck, resting under the shirt collar and knotted at the throat.

Bows

The bow tie is a type of necktie. It consists of a ribbon of fabric tied around the collar of a shirt in a symmetrical manner so that the two opposite ends form loops.

There are generally three types of bow ties: the pre-tied, the clip on, and the self-tie.

1 Pre-Tie

Shown below on the right is one style of pre-tie/ready-tie bow tie. (Fig 1)

Fig 1

NOT TO BE REPUBLISHED © NIMI

2 Clip-On

A clip-on does not go around the neck but clips to the collar points. (Fig 2)

Fig 2

3 Self-Tie

If choosing a self-tie/tie-it-yourself/freestyle bow tie, there are usually two shapes available: the “bat wing,” which is parallel-sided like a cricket bat, and the “thistle,” also known as the butterfly.

4 Ascot Tie

An ascot is worn in place of neck tie with a suit or blazer. Wear an ascot low around your neck and make sure it just peeks out from your shirt’s neckline.

An ascot tie, or ascot or hanker-tie, is a neckband with wide pointed wings, traditionally made of pale grey patterned silk. This wide tie is usually patterned, folded over, and fastened with a tie pin or tie clip.

5 Cravat

This is a neckband, the forerunner of the modern tailored necktie and bow tie (Fig 3)

Fig 3

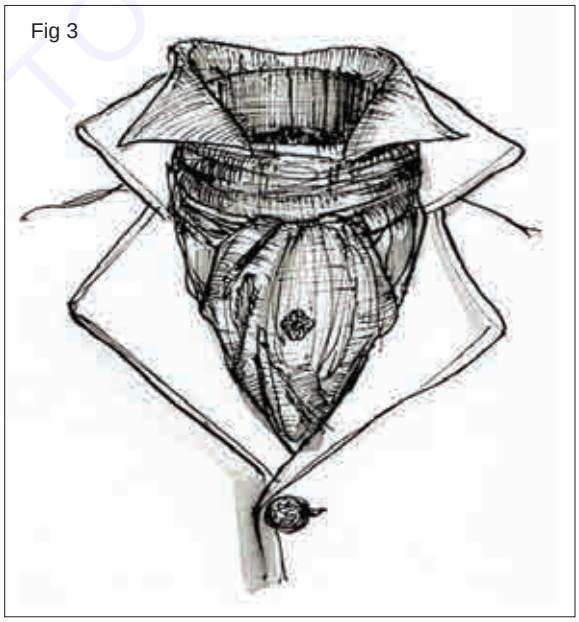

NOT TO BE REPUBLISHED © NIMI

Caps and Hats

Hat

A hat is a head covering which is worn for various reasons, including protection against weather conditions, ceremonial reasons such as university graduation, religious reasons, safety, or as a fashion accessory.A hat can refer to any headgear with a crown and brim of any size or shape. A cap, on the other hand, is a form of hat that has an unshaped crown and a visor.

Difference between caps and hats

Cap	Hat
Around the Crown fits tightly head	Crown fits loosely around the head
Either has a visor or no brim at all	Has a brim that circles the entire hat
Blocks sunlight from the face, doesn't protect the rest of the body (it might not provide shade if it doesn't have a visor)	Provides shade against sunlight, depending on how wide the hat is and how long the brim is (it might provide no shade at all)
Used in sports and fashion	Used in ceremonial or religious settings
Seen in more casual and informal settings	Seen in more formal events.

Various popular hats/caps

1 Ascot Cap -A hard style of hat, usually worn by men.

2 Baseball Cap

3 Beanie

4 Beret

5 Bowler/Derby

6 Boater

7 Bucket/Fisherman Hat

8 Cowboy

9 Deerstalker cap

10 Fascinator Hat

11 Fedora

12 Homburg

13 IVY cap/Gatsby Hat

14 Porkpie Hat

15 Top Hat or Magician Hat or beaver's hat

16 Trapper or bomber's hat

17 Mortar board Hat

© NIMI NOT TO BE REPUBLISHED

Pockets

A pocket is a bag or envelope which an opening or slot with a closed end that is usually sewn in or over the garment. Pockets may have a decorative or functional purpose. Basically, the pocket is utilized as a depository or as a holding provision for items or hands. A pocket opening should be sufficiently wide and deep to accommodate the hands and to prevent objects from falling out. All types of garments can be designed with pockets. Pockets of varied shapes, sizes, and locations with decorative details such as bias binding, lace, ruffles, tucks, pleats, appliqué, embroider, etc. can be attached to children's garments to make them attractive.

Pockets can be classified into three types

1 Applied pockets – outside pocket

2 In-seam pockets

3 Set-in pockets – welt, flap and bound or corded pocket

Different Types of Pockets:

1 Patch pocket:

Patch pockets can be lined or unlined, and can be made in any shape desired. This pocket can be cut in the desired shape and are fastened to the outside of the garment.

2 Inseam pocket

A pocket in which the opening falls along a seam line of the garment is known as an 'in-seam pocket'. This type of pocket can be found in pants, skirts, trousers, shorts, kids' wear, kurtas and pyjamas.

3 Slash pocket/Set-in

Slash pockets lie inside the garment and the pocket opening is a slash of some type. The slash pocket is subdivided into three types, namely, bound, welt and flap.

4 Flapped pocket

The side pockets utilize flap pockets, which consist of an extra lined flap of matching fabric to cover the top of the pocket. This flap present over the pocket prevents the contents inside the pocket from getting wet during rain

5 Besom pockets:

Besom pockets are nothing but hidden or secretive pockets. Moreover, the edges of the slash have narrow stitched folds or 'welts' along the seams, which makes it difficult to distinguish from the garment.

6 Bellows pockets:

Bellows pockets are sporty pockets. They have folds along the three sewn sides of the pocket, which makes them expandable. These pockets can accommodate bigger objects and were typically designed for hunting jackets.

7 Ticket pockets:

Ticket pockets are basically very small pockets, with or without a flap. These pockets are located on the top of the regular right-hand pocket of a jacket. These are not easily visible and have only one slash evident on the front of the pockets add to the style and help in convenient usage of the jacket. Ticket pockets are also referred to as 'change pockets'.

8 Kangaroo pockets:

Kangaroo pocket is a type of pocket, usually featured on hoodies and sweatshirts, that is large enough to fit both hands into. This type of pockets are long, lengthwise pockets — a bit like a letterbox — that have two 'pocket' gaps for the hands at either end. They are often used on hoodies or in sportswear, and are named for resembling a Kangaroo's pouch.

© NIMI NOT TO BE REPUBLISHED

Belts

Belts are flexible band or strap of material worn round the waist over the garment usually to conceal the waist joint of bodice and skirt. Belts enhance the look of the wearer. Selection of the size, shape, colour and type of the belt may vary from individual to individual. Belts may be made soft or stiff, narrow or wide, plain or intricate, depending upon the garment and the fashion trend.

Types of Belts

1 Soft belt

2 Stiffened belt

3 Shaped belt

4 Interfaced belt

5 Belt with backing

6 Contour belt

7 Inner belt

Different Types of Fabrics

Various types of fabrics can be selected for the designing of a particular dress or garment depending upon it's characteristics.

1 **Canvas:** Canvas is a plain-weave fabric typically made out of heavy cotton yarn and, to a lesser extent, linen yarn. Canvas fabric is known for being durable, sturdy, and heavy duty.

2 **Cashmere:** Cashmere is a type of wool fabric that is made from cashmere goats and pashmina goats. Cashmere is a natural fiber known for its extremely soft feel and great insulation.

3 **Chiffon:** Chiffona is a lightweight, plain-woven fabric with a slight shine. Chiffon has small puckers that make the fabric a little rough to the touch. These puckers are created through the use of s-twist and z-twist crepe yarns

4 **Cotton:** Cotton is made from the natural fiber. Cotton is primarily composed of cellulose, an insoluble organic compound crucial to plant structure, and is a soft and fluffy material.

5 **Crepe:** Crepe is a silk, wool, or synthetic fabric with a distinctive wrinkled and bumpy appearance. Crepe is usually a light-to- medium-weight fabric.

6 **Georgette:** Crepe georgette is woven using tightly twisted yarns, which create a slight crinkle effect on the surface Georgette is sheer and lightweight and has a dull, matte finish.

7 **Velvet:** Velvet is a soft, luxurious fabric that is characterized by a dense pile of evenly cut fibers that have a smooth nap. Velvet has a beautiful drape and a unique soft and shiny appearance due to the characteristics of the short pile fibers.

8 **Gingham:** Gingham is a cotton fabric, or sometimes a cotton blend fabric, made with dyed yarn woven using a plain weave to form a checked pattern.

9 **Jersey:**cotton blends, and synthetic fibers.

10 **Lace:** Lace is a delicate fabric made from yarn or thread, characterized by open-weave designs

11 **Leather:** Leather is any fabric that is made from animal hides or skins, and different leathers result from different types of animals and different treatment techniques.

12 **Modal:** Modal fabric is a semi-synthetic and form of rayon, another plant-based textile, though it is slightly more durable and flexible than rayon. Modal is often blended with other fibers like cotton and spandex for added strength.

© NIMI NOT TO BE REPUBLISHED

13 **Muslin:** Muslin is a loosely-woven cotton fabric. It's made using the plain weave.

14 **Organza:** Organza is a lightweight, sheer, plain-woven fabric that was originally made from silk.

15 **Polyester:** Polyester is a man-made synthetic fiber created from petrochemicals, like coal and petroleum. Polyester fabric is characterized by its durable nature.

16 **Satin:** Satin fabric is characterized by a soft, lustrous surface on one side, with a duller surface on the other side.

17 **Silk:** Silk is a natural fiber produced by the silk worm, an insect, as a material for their nests and cocoons. Silk is known for its shine and softness as a material.

18 **Spandex:** Also known as Lycra or elastane, Spandex is a synthetic fiber characterized by its extreme elasticity. Spandex is blended with several types of fibers to add.

19 **Suede:** Suede is a type of leather made from the underside of the animal skin, giving it a soft surface.

20 **Taffeta:** Taffeta is a crisp, plain-woven fabric made most often from silk, but it can also be woven with polyester, nylon, acetate, or other synthetic fibers.

21 **Tweed:** Tweed is a rough woven fabric usually made from wool. It is an extremely warm, hard-wearing fabric that is thick and stiff. Wool tweed is often woven using different colored threads to achieve dynamic patterns and colors, frequently with small squares and vertical lines.

22 **Twill:** The distinguishing characteristic of the twill weave is a diagonal rib pattern. Twill weaves have a distinct, often darker colored front side and with a lighter back. Twill fabric has higher thread count.

Fashion illustration

A fashion designer must be a good communicator. The primary three types of illustration are used to communicate design ideas.

1 Croquis

2 Finished Drawings

3 Flats

Croquis

A quick illustration that depicts the general silhouette, proportions and look of a garment having the drawings in a rustic form usually in pencil on white paper or in a sketch book without too much detail and used in the conceptual phase of the design process.(Fig 1)

Fig 1

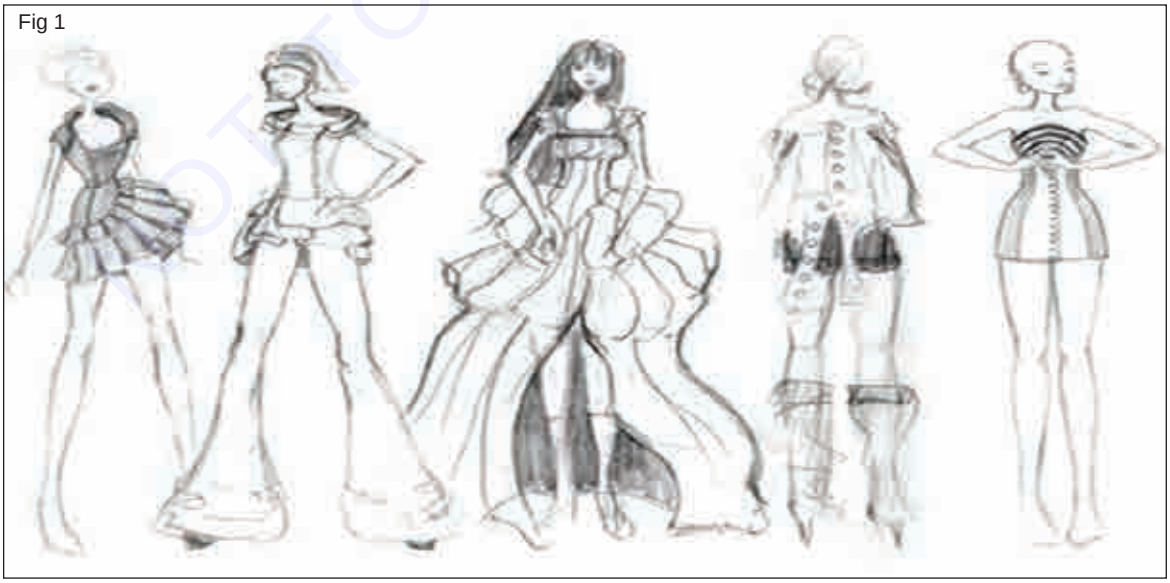

© NIMI NOT TO BE REPUBLISHED

Finished Drawings/Illustrations

These are fully rendered, final illustrations of a fashion figure or series of figures.They communicate the attitude or sensibility of the garment or collection and the intended customer. Styling and accessories that may not be part of the fashion collection may be included for a stylish effect.(Fig 2)

Fig 2

The average adult is 7 ½ heads tall. A fashion figure is at least 9 inches tall. The 8 headed figure with layers, movement and personality The 8 headed fashion figure (Fig 3)

Fig 3

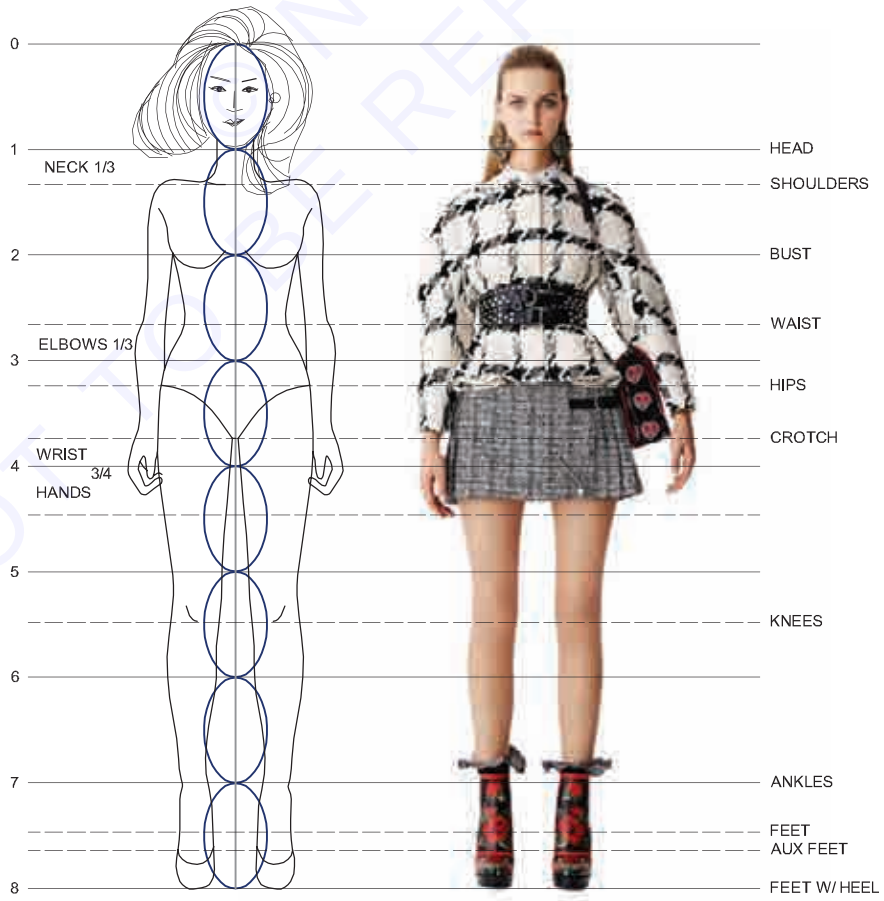

Flat drawings

- This is a technical illustration showing a garment laid flat in exact proportion used to communicate in detail the garment's structure and functionality.
- These are rendered using a larger, more realistic body scale than the 8 headed figure.
- These drawings begin on tracing paper over the form (male, female, teens or child's form) and drawn one half at a time. Drawings are precise and use rulers, curves and templates for detail and exactness.
- The first half of the drawing is folded over and then traced onto the other side for perfect symmetry. Sometimes these images are scanned and maneuvered in a CAD system and are stored in a style library. The silhouettes begin in pencil and then as they are nearing completion several sets of varying thicknesses of markers are used for details.
- Sometimes colours are added once designs are completed and these flats are used as virtual paper dolls for merchandising, buying and selling. They may go into a CAD style library and be used for many seasons.

Other uses

Spec sheets given to pattern makers for construction. Example of a basic flat drawing has been shown in Fig 4

Fig 4

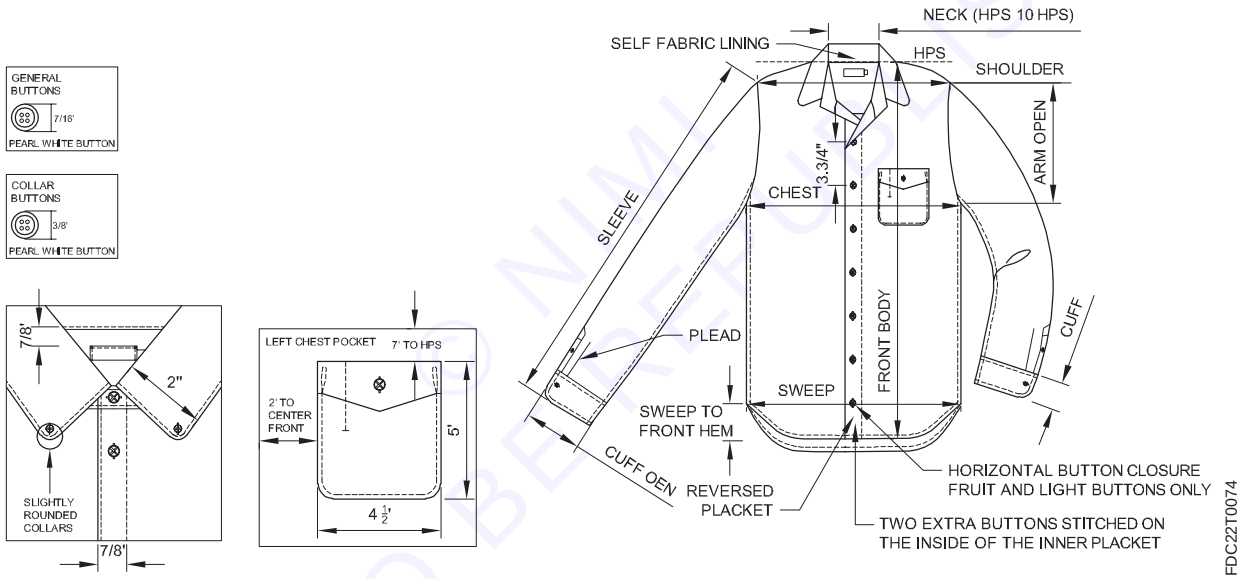

NOT TO BE REPUBLISHED © NIMI

LESSON 12 : Introduction of Portfolio

Objectives

At the end of this lesson, you shall be able to

- about portfolio
- flat sketch, Mood board, Story board, Colour story
- presentation technique
- knowledge of reputed designer and their works.

Introduction about portfolio: The collection of all the samples made and designed by a fashion designer is known as fashion portfolio. It is a way to showcase the collection of works and designs before a potential client. A fashion portfolio is very necessary for fashion designer and consists of several important components. It is suggested that, the introduction to a portfolio must not be a deep introduction of the designer, but it should highlights the inspiration and purpose of the collection. Although, it should be clear and understandable what type of designs the client can expect to find in the portfolio. A good fashion design portfolio consists of many aspects such as fashion illustrations, an inspiration or mood board with textile swatches, flat sketches; floats and CAD drawings.

How to Create a Fashion Design Portfolio

The some of the important tips and making techniques of fashion design portfolio are as follows:

1 At first select a theme and make an inspiration board according to theme.

2 With the help of the inspiration theme now create a mood board. Before starting the work, always research about the latest fashion trends,color, and work backwards.

3 Then, add various related samples, assemble them by collection, color, season etc.

4 Then, select the fabric according to the theme. Also finalize the ornamentation technique such as embroidery, block, tie dye, hand stitch, appliqué etc.

5 Create a board by illustrator and highlights the pictures of dress parts, designs, pieces, models, jewelry and accessories etc.

6 Then start the photo shoot by the professional photographer. Try to avoid any unprofessional images/photo shoots in the fashion portfolio.

7 A portfolio can be made in any size that works for the content – A4, A3 etc. One should also create a digital version of the fashion portfolio.

8 To highlight the fashion design work, include any images of the finished garment. This will include complete attire of the style.

Flat Sketches

A flat sketch is a two-dimensional technical drawing that illustrates a garment with basic solid lines. It's like a "blueprint" of your fashion design —much like an architect's blueprint for a house before they can begin to construct it.The word "flat" refers to the way that they are drawn: imagine the garment is lying flat on a table so that you are viewing all the details from either the front or the back.(Fig 1)

Mood board

A mood board is a type of visual presentation or 'collage' consisting of images, text, and samples of objects in a composition. It can be based on a set topic or can be any material chosen at random. A mood board can be used to convey a general idea or feeling about a particular topic. They may be physical or digital, and can be effective presentation tools. Mood boards are fundamental tools used in design industries.

© NIMI NOT TO BE REPUBLISHED

Fig 1

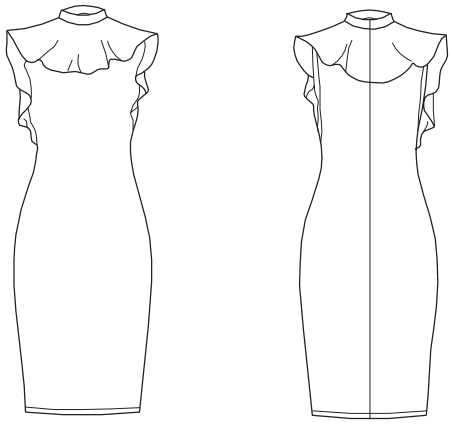

FDC22T0075

The term mood board is often used generically to cover a wide range of board types, each having specific uses. The types of boards considered to be a vital part of the design process that facilitate creative and innovative thinking and application, as opposed to those associated with marketing to merely present and communicate product to an audience, are the focus of this stud.(Fig 2)

Types of Mood board

Physical

One way of creating a mood board is using a foam board which can be cut up with a scalpel and can also have spray mounted cut-outs put onto it. Cardboard, paper, and cork-board can also be used as an alternative base for a mood board. Some examples of ideas used to convey a mood are food, music, and colors. Mood boards can be decorated with string, stickers, pretty tape, magazine pictures, original art, original pictures, and fabrics, as well as any other decoration that happens to inspire the creator. They can take the form of various shapes and sizes.

Digital

Creating mood boards in a digital form allows for easier collaboration and modification. They can be created with digital design software, such as Adobe Creative Cloud Express and Figma, or online via sites such as Pinterest. Users of those platforms often use images that others have shared online to create a vision that they might not have necessarily been able to create themselves with the physical objects around them.

Uses

Graphic designers, interior designers, industrial designers, photographers, user interface designers and other creative artists use mood boards to visually illustrate the style they wish to pursue. Amateur and professional designers alike may use them as an aid for more subjective purposes such as how they want to decorate their bedroom, or the vibe they want to convey through their fashion.

Mood boards can also be used by authors to visually explain a certain style of writing, or an imaginary setting for a story line. In short, mood boards are not limited to interior decorating purposes, but serve as a visual tool to quickly inform others of the overall “feel” (or “flow”) of an idea. In creative processes, mood boards can balance coordination and creative freedom.

Mood boards can be used in marketing for advertisements and branding. They are used to help creative teams stay on the same page while also adhering to the image that the brand wants to project outward. They can also be helpful for sticking to a specific creative concept when creating a series of ads.

Story board

A storyboard is a graphic organizer that consists of illustrations or images displayed in sequence for the purpose of pre-visualizing a motion picture, animation, motion graphic or interactive media sequence. The storyboarding process, in the form it is known today, was developed at Walt Disney Productions during the early 1930s, after several years of similar processes being in use at Walt Disney and other animation studios.(Fig 3)

Color story presentation Techniques

Colors are all around us. Think about it. The bright blue in a clear morning sky makes us feel alive and free; the deep purples and reds in the flowers that bloom in Spring evoke emotions of warmth, life and energy; the pitch black sky at night, arouses thoughts of mystery and seduction.The color wheel was the first model used to illustrate the relationship between different colors. The most basic of them are the primary colors, which are red, blue and yellow. They cannot be made from mixing any two colors and, as their name implies, they are the basis of all other colors.(Fig 4)

The secondary colors are derived from combinations of the primary colors. They are violet, orange and green. (Fig 5)

The tertiary colors are created when you combine a primary color with a secondary color, resulting in one of the six following colors: red-orange, red-violet, blue-violet, blue-green, yellow-green and yellow-orange.(Fig 6)

These 12 colors compose the complete color wheel.(Fig 7)

Fig 4

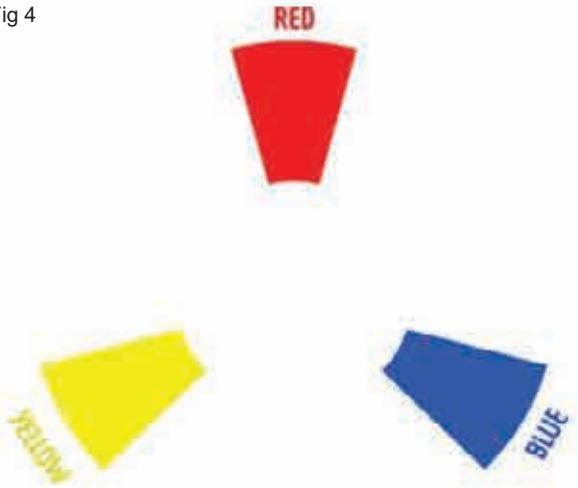

Fig 5

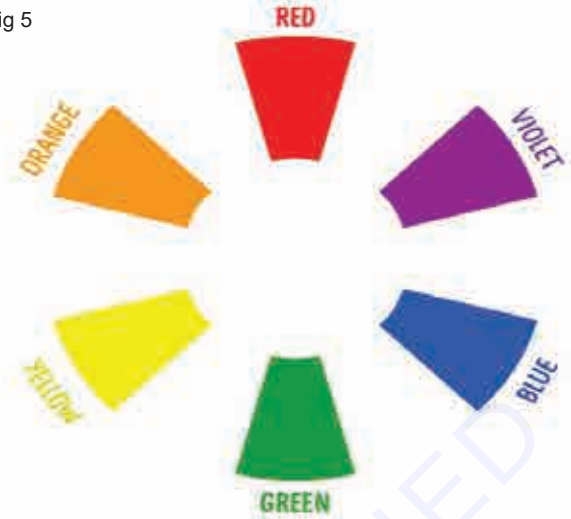

Fig 6

Fig 7

It is important to differentiate between tints, tones and shades. When a color is mixed with white, you create tints. These are lighter than the pure hue.(Fig 8)

When a color is mixed with grey, you create tones, which are duller than the pure hue. (Fig 9)

When a color is combined with black, you have shades. These are darker than the original hue.

Fig 8

Fig 9

NOT TO BE REPUBLISHED © NIMI

Knowledge on reputed designer and their works

Fashion Designer : Manish Malhotra

Introduction: Manish Malhotra is an Indian fashion designer.He launched his label in 2005.In 2014, his label marked a turnover of over INR 1 Billion making it one of the first Indian luxury fashion houses to do so. Manish Malhotra started his career as a model, while studying at the Elphinstone College in Mumbai. Though he did not have formal fashion design training, he was attracted towards costume design due to interest in clothes, costumes and art.

Background: He worked in a boutique as a part time salesman. In 1998, he ventured into mainstream designing with his couture store 'Reverie - Manish Malhotra'. Soon after, he received appreciation for his glamorous ensembles using traditional colors, craftsmanship, textures and embroideries presented at his first runway show in November 1999.In 2005, he launched his couture label 'MANISH MALHOTRA' which offers bridal, couture, diffusion and men's wear collections and currently retails at two stores in Mumbai and New Delhi. The label also retails at multi-brand boutiques across India and in Dubai.

Market Segment: He is predominately known for his vibrant, color blocked womenswear and intricate use of Kashmiri embroidery. His line is worn by some of Bollywood's most famous stars. He has shown at South Africa Fashion Week, Dubai Fashion Week, Wills India Fashion Week, Delhi Couture Week and India Resort Fashion Week. He has presented his collections at showcases across the globe.

Designs: Manish Malhotra never fails to showcase the handcrafted legacy of India. His designs and styles get churned into a magical blend of rich textures, which include satin, Georgette, silk and chiffon and many detailed fabrics adding to his innovative list. Be it his Indian costume collections or even his western clothing collections, his created costumes do not merely showcase a 'plain Jane' look. Intricately embedded sequins, Swarovski, pearls, tassels, and crystals, thus creating more glamor endowed in his outfits that define his talented art and style. His traditional outfits play with a galore of colors bearing different shades and at the same time, his western collections spread the enhanced essence of modernism coated in unique layers of creativity and elegance.

Collaborations/ Projects: In August 2016, Malhotra's show for Lakme Fashion Week's Winter-Festive edition was shot for a Virtual Reality fashion experience by Etihad Airways.

Promotion: In 2005, he launched his couture label MANISH MALHOTRA. Today, Label MANISH MALHOTRA offers Bridal, Couture and Diffusion collections and currently retails at two stores in Mumbai and the Haveli store overlooking the magnificent QutubMinar in New Delhi. The label also offers an extensive selection of impeccably cut and tailored ensembles for men.

© NIMI NOT TO BE REPUBLISHED

Module 4: Garment Construction

LESSON 13-24 : Draping terminology

Objectives

At the end of this lesson, you shall be able to

- introduction and principle of draping
- terms and tools used in draping
- draping techniques and methods.

Introduction: The process of positioning and pinning the fabric on a dress form is called draping.

Draping terminology is an important part of fashion design .Draping is a technique used to make a 3-dimensional dress pattern with the aid of a dress form figure by pinning and placing fabric against the form to create a garment. Typically designers use muslin, which is cost-efficient and offered in a variety of weights.

Draping can be used to create the basic pattern or to design organically by playing with the fabric on the form. Draping is used to create both custom and mass-produced garments. It is an essential step in fashion designing as it helps get the perfect fit and shape for garments. Draping is one of the oldest methods of garment construction, and it started as a way to fit clothing around the body without using patterns. (Fig 1)

Principle of draping

- Straight grain should always run perpendicular to the floor and cross grain parallel to the floor.
- The body lines such as bust line, waistline, hipline etc should be parallel to the floor.
- Use good quality pins that do not loose shape easily.
- Establish seam lines on the form
- Tear the muslin piece instead of cutting
- Check the balance of the warp and weft
- Mark grainline on muslin; mark cross grain at the fullest part of the dress form
- Place the muslin on the form as per the marked lines, place it in position with pins
- Pin the fabric to the form at the seams.
- Never pull the fabric and distort the grain
- Darts, pleats, tucks etc need to be pinned
- Drape all pieces of the garment
- Mark all lines clearly
- Mark curved seams with small dots at frequent intervals.
- Mark darts, pleats and tucks where they cross seam lines with a X mark

Terms of draping:

- Apex: the highest point of the bust and a reference point for establishing the cross grain for the front bodice
- Center Front: vertical line that marks the middle front of the garment
- Center back: vertical line that marks the middle back of a garment
- Seam: two or more edges of fabric held together by stitches
- Bias: A diagonal line across the grain of the fabric to showcasing maximum stretch
- Cross grain: section of fabric that runs perpendicular to the lengthwise grain that runs from selvage to selvage
- Dart: a design feature that aids in fitting garments around the shape of body.

Tools used in draping

Draping tools are necessary to drape, measure, mark and draft designs.

1 **Awl:** It is a pointed metal instrument used for punching holes for belt eyelets.

2 **1/8-inch Clear Plastic Ruler:** It is a two-inch wide ruler divided into 1/8-inch grids.

3 **French Curve Ruler:** An irregular curve ruler used to shape and curve edges of collars, necklines, crotch seams, armhole and hip curves.

4 **Iron:** A steam-and-dry iron is used to smoothen and flatten and aid in blocking muslin.

5 **L-Square:** A metal or plastic ruler with two arms of different lengths meeting at right angles.

6 **Muslin:** An inexpensive fabric, on which the grain and cross grain are quite visible. Basically it is used to drape garments made of woven goods.

7 **Notches:** A punching tool used to mark the edge of a sloper or paper pattern.

8 **Pencils:** Pencils are used in developing muslin patterns.

9 **Pin Cushion or Pin Dispenser:** A sewing tool that keeps pins organized in a convenient place.

10 **Scissors and Shears:** Shears are usually four-to eight inches long and made of steel Bent-handled shears are excellent for easy and straight cutting.

11 **Style Tape:** A narrow, woven tape that is used to define style lines on the dress form.

12 **Straight Pins:** Dressmaker pins with sharp tapering points that will not rust are used to anchor muslin or fabric to the dress form while draping.

13 **Tailor's Chalk:** A small piece of chalk, approximately 1 '/2" square, with two tapered edges. It is used to mark lines temporarily on different points of garment and other alteration points.

14 **Tracing Wheel:** It is a sharp, spike edged circular wheel with a handle, particularly used to transfer markings from the drape to the pattern paper.

15 **Yardstick:** A wooden or metal ruler one yard in length (36 inches) that is marked in inches or metric terms, An aid for laying pattern pieces on the straight grain of the fabric or for measuring hemlines.

Types of Draping techniques: - This is usually done by utilizing the fabric's natural fall. Draping involves different techniques such as pleating and gathering. There are six basic steps for draping.

1 Preparation

The first step is to have perfect and accurate measurements of the garment or dress form. Next, part is to mark the center line of the dress by using a tape. This will help to keep the draping even across the dress.

2 Sketching

Preparing a sketch or illustration of your garment always helps in designing the garment. Here, the sketch will help to understand how to best manipulate the fabric in order to get the dramatic and creative effect.

3 Placing the muslin on dress from

This is the most common and suitable fabric used in draping process; it is flexible in its thickness and volume.

© NIMI NOT TO BE REPUBLISHED

4 Pinning

Pinning is a process which pulls the folds of the fabric together to create the draping design. Pinning will give you a good visualization of how the garment will look after completion.

5 Basting the Fabric:

After pinning, the next step is to baste the fabric. In this step, either sew the fabric to the foundation piece or sew the fabric itself to complete the draping process.

6 Trimming:

The last step is common across various designing techniques. Here, trim off any excess fabrics that may remain after it is finished with draping. The raw edges of the draping should always be hidden neatly in the seams, so that it looks perfect and clean.

Dart manipulation

At the end of this lesson, you shall be able to

- state about Dart manipulation
- about Single and Double pointed dart.

Introduction

Darts are folds and sewn into fabric to take in ease and provide shape to a garment, especially for a woman's bust and other curved parts. Darts help in shaping the fabric to fit the body and thus provide comfort to the wearer. They provide fullness to natural body curves. Darts are very rarely used for decorative purposes like providing a design line. The fitting, marking, stitching and pressing of darts should be done accurately.

Dart Manipulation: The slash and spread technique is a method of manipulating patterns to form new shapes. To utilize this technique, a traced copy of the original pattern is used and the original is never altered. The pattern is slashed, cut, and manipulated to achieve the desired new shape. Darts are used for dressmaker's point marks. It is a technique which used to give proper shape to the garments by curving straight fabric to the body. Darts are producing by stitching a long, thin confine to a point, which is then pressed down to one side. Dart manipulation is a technique for moving darts around a block or sloper to create good fit or create new design.(Fig 1)

Fig 1

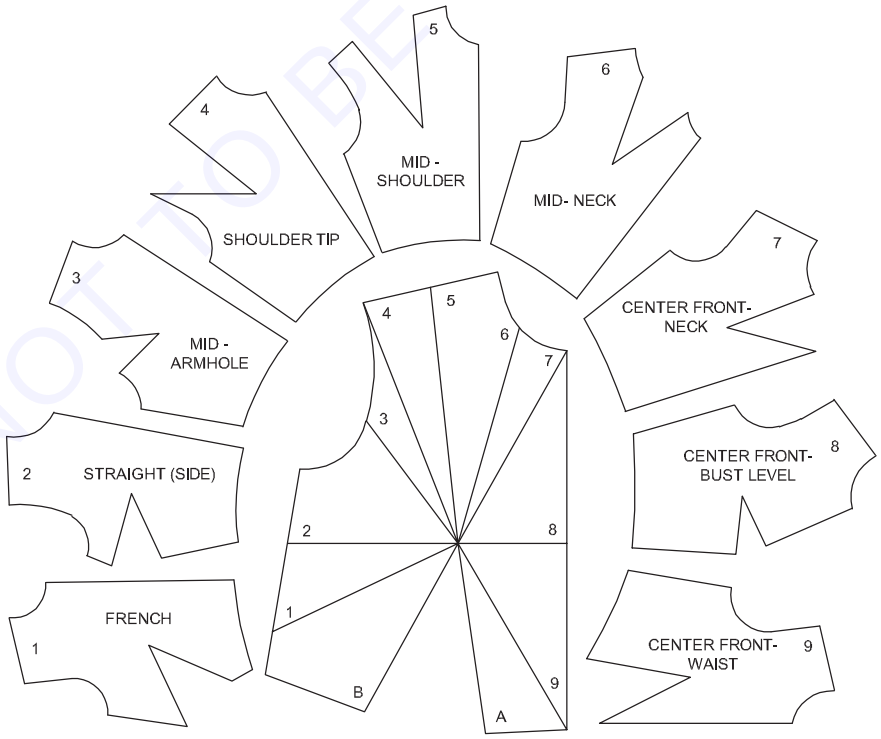

NOT TO BE REPUBLISHED

Single pointed dart: It is most common dart mostly used is skirts at waist and blouses at bust. The single dart is narrow at one end and wide at the other. With the triangular shape of an angle with single dart point and two dart lines.Flat patternmaking depends on previously developed pattern as a base for creating design pattern. The chosen working pattern is traced for the following projects. Remember: the working pattern is never altered because it is used to create other design. Save the pattern project for future use.(Fig 2)

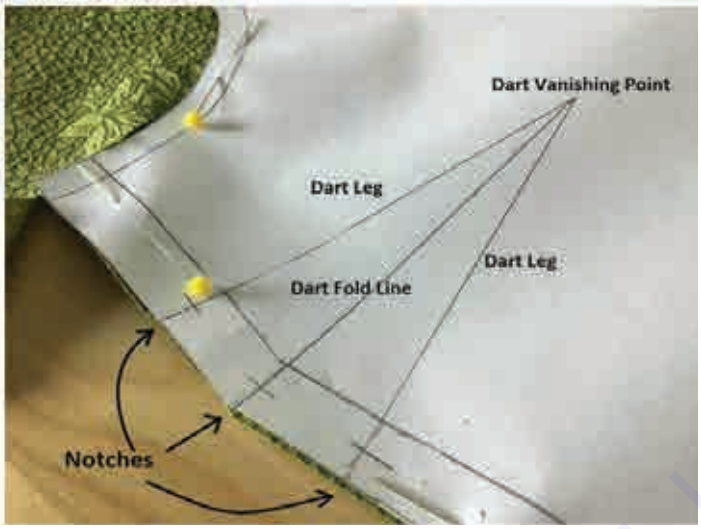

Double pointed dart: It is also called fish-eyed dart and body dart. Mostly this darts is used for jackets and dresses that fit at waist. Double pointed dart is sharp and narrow at both the ends.The two dart patterns is used in industry more often than a one dart pattern. There are advantages to dividing the dart excess into more than one location other than the creative aspects of the designs.

- Pattern pieces fit the marker more economically.
- The natural bias of the fabric at side seam is less severe.
- Fit is improved by releasing ease around the bust mound from two-dart points rather than from one.(Fig 3)

Fig 3

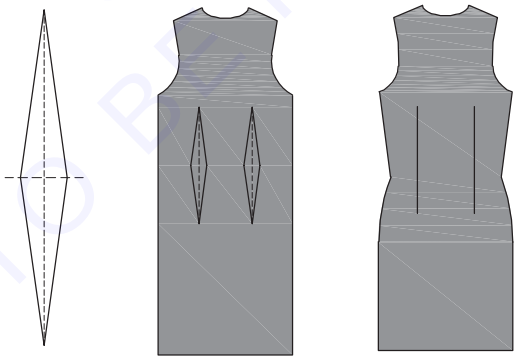

FDC22T0077

Skirt, necklines and armhole variation

At the end of this lesson, you shall be able to

- about skirt, neckline and armhole variation
- style lines, cowls and fitted midriffs
- collars, Bias cut dresses
- grading : Basic bodice skirt and trouser.

This type of darts starts at the waist and slump towards hip. As per your choice how much fit you require you have two darts on either side of the center of the skirt waist or pant waist. And as waistline falls past the hips it crates fullness.(Fig 1)

© NIMI NOT TO BE REPUBLISHED

Fig 1

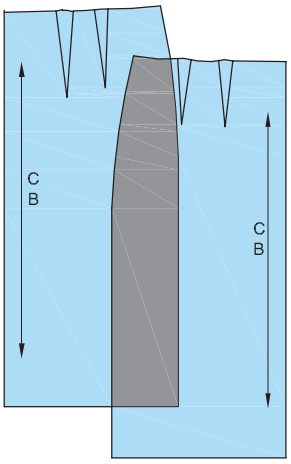

FDC22T0078

Neckline and armhole variation:

The neckline is the top edge of a garment that surrounds the neck, especially from the front view. Neckline also refers to the overall line between all the layers of clothing and the neck and shoulders of a person, ignoring the unseen undergarments.

For each garment worn above the waist, the neckline is primarily a style line and may be a boundary for further shaping of the upper edge of a garment with, for example, a collar, cowl, darts, or pleats. In that respect it is similar to the waistline and hemline.

The armhole dart is a diagonal dart from the mid armhole down towards the bust point. This is quite a popular dart ,used to shape tops and blouses around the bust that then fall straight down or into a flared hem. (Fig 2 & 3)

Fig 2

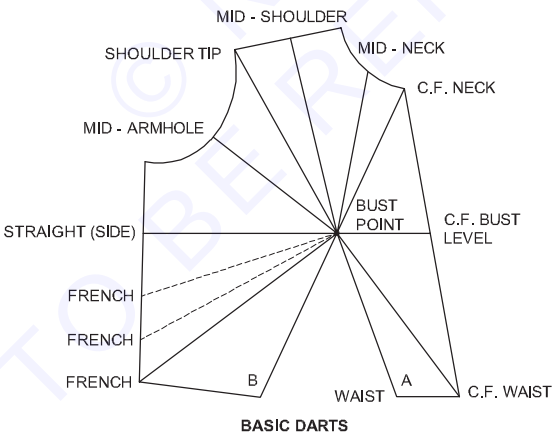

FDC22T0079

NOT TO BE REPUBLISHED © NIMI

Fig 3

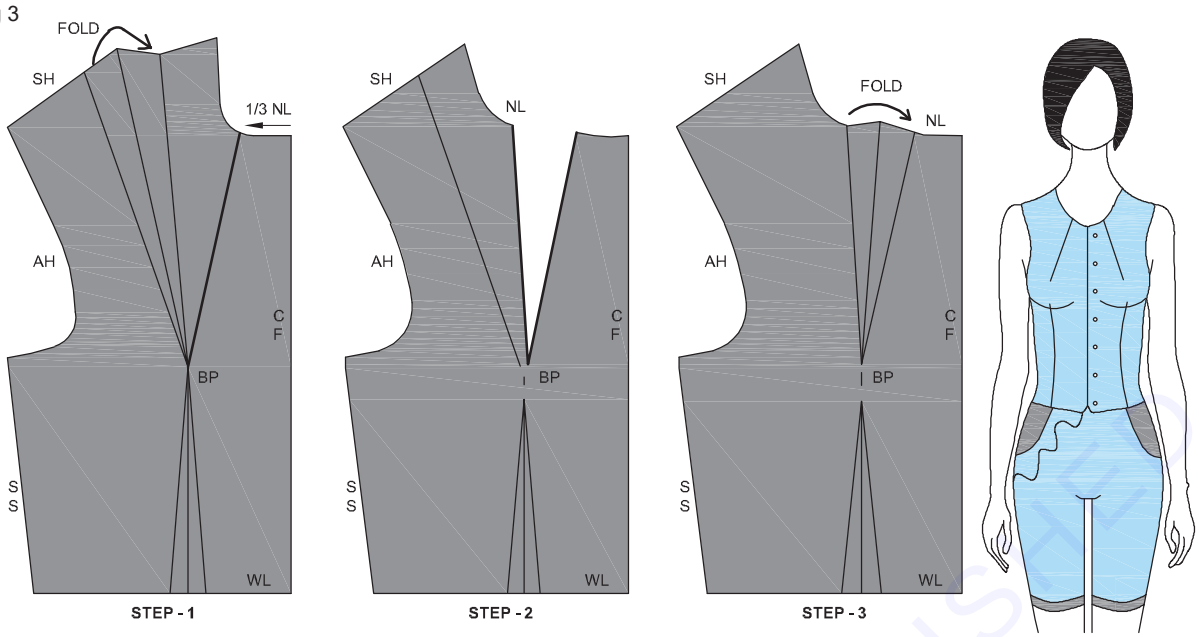

Style lines

These are of two types.

- princess style line
- panel style line

In the skirt style lines pass across:

- Gore
- Yoke
- waistbands

A seam dividing a bodice or skirt (Fig 1)

- May or may not take the place of a dart
- May be a design elements
- May be a location for added flare

Fig 1

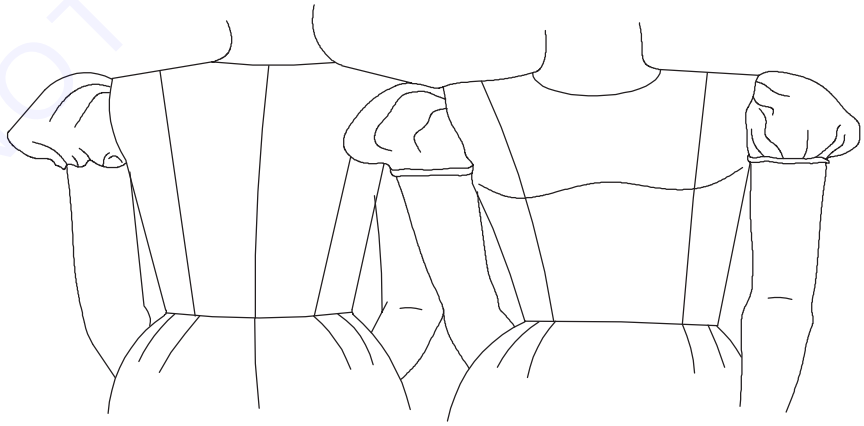

Bodice style lines fall into two classifications (Fig 2)

© NIMI NOT TO BE REPUBLISHED

Fig 2

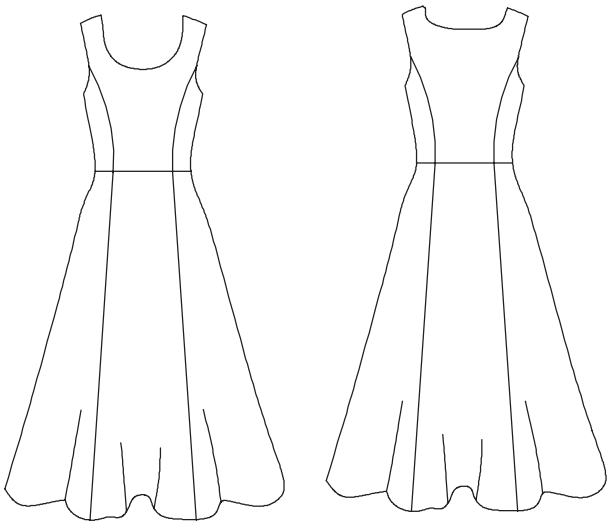

FDC22T0082

1 Those that cross over the bust

2 Those that do not cross over bust

Style line that cross the bust

- Replace dart legs with seams
- Princess style line:

It stars at the front and back waist darts, continues over bust point and shoulder blades, and ends at the mid-shoulder dart of the back.

Armhole princess line:

- It is a variation of the princess
- Style line curves from the bust point in front the bust pint in front and the shoulder blades in back to about mid-armhole.

Style lines that do not cross the bust

Dart excess remains in designs where the style lines do not cross bust point

- Panel style line:
- It extends from the waist to mid-armhole of the front and back bodice without passing through the bust point.
- A short side dart intercepts the panel style line.
- It can be varied to create other designs.

Types of skirt style lines

Gore

- Vertical division
- A skirt panel that tapers to the waist line.
- May take the place of one or more darts
- May be a location for added flare
- Named by the total number of gores in the skirt

Yoke

- Horizontal division of the skirt
- The yoke is the upper part of the skirt, and is separated by a seam from the lower part of the skirt.
- Can take the place of darts

© NIMI NOT TO BE REPUBLISHED

- Yokes can also be the upper part of a bodice. (Fig 3)

Fig 3

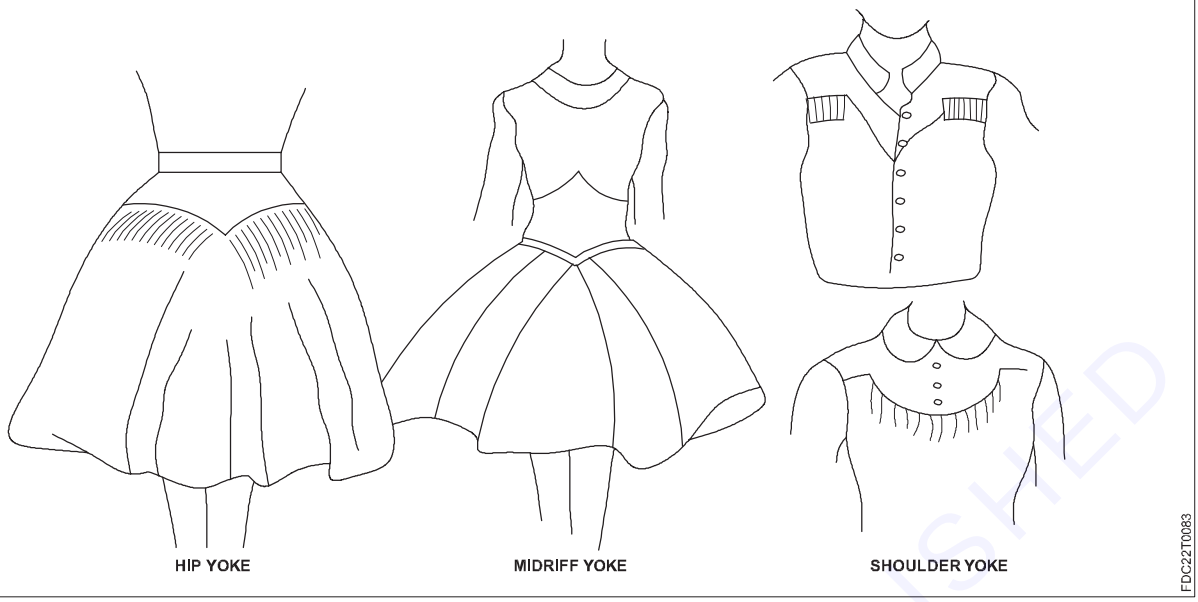

Waistbands (WB)

- A waistband can also be a skirt style line
- Three types:
  - a Straight WB
  - b lowered WB
  - c Raised WB

Straight waistbands

- at waist
- Rectangular pattern

- **Lowered Waistbands**
  - Below waist
  - Curved pattern
  - Patterned from top of skirt
- **Raised waistbands**
  - Above waist
  - Curved pattern
  - Patterned from bodice

Cowls

A cowl is a very loose neck or hood on a piece of clothing. Christian monks often wear a belted robe-like garment with a cowl. Use the word cowl for the hood on a long, wide-sleeved garment, or to refer to the garment itself. the front of a cowl tends to be closed, rather than open like a cloak or a cape, and this was the reason cowls became the formal wear for monks during the Middle Ages — the closed cowl was warmer. (Fig 4a & 4b)

© NIMI NOT TO BE REPUBLISHED

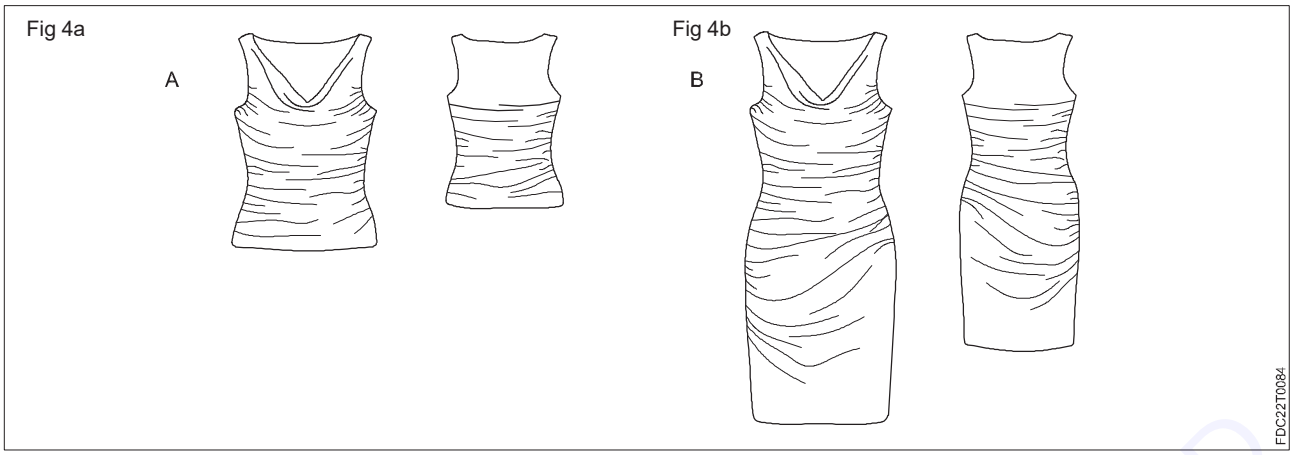

Cowl fold are created by allowing fabric to fall to desired depths from secured ends of a bias triangle. Cowls drape best on true bias and when cut in soft, loosely woven fabrics-crepe, silk, gauze, rayon, satin chiffon, and certain knits. The bodice cowl depends on excess taken from the basic dart- the lower the depth of the cowl, the greater the amount of excess need- an Application of dart manipulation.

Type of cowls

Cowls can be designed with or without pleats and gathers and with few or many folds. They fall at varying depths, creating a soft look to any garment. Cowls fall from the shoulder at necklines, at armhole, or from the waist or dresses, gowns, blouses, pant jackets, and coats, cowls can also be designed to fall from the cap area of the sleeve. Cowls can be pulled in any direction to create interesting effects.

French darts rather than waist dart may be preferred.

Upper cowl:-Fig:5

Armhole cowl:-Fig:-6

Lower cowl:-Fig:-7

Fitted midriff

A fitted midriff refers to a garment, typically a top or dress, that is tailored to closely hug the waist and abdomen area, accentuating the natural curves of the body. This style is often associated with a snug fit around the midsection, creating a flattering and stylish silhouette.

Types of fitted midriff

Fitted midriff typically refers to a style of clothing that fits closely around the midsection of the body. Some common types of fitted midriff tops include:

1 **Crop tops:** these are short tops that typically end above the navel, providing a fitted look around the midriff.

2 **Busters:** structured tops that often include boning or other support features to shape and support the bust and midriff.

3 **Corsets:** tight-fitting garments that are often worn to shape the waist and create an hourglass figure.

© NIMI NOT TO BE REPUBLISHED

4 **Peplum top:** tops with a flared fabric or ruffle attached at the waist, creating a fitted look around the midriff while also providing some flare.

Collar

A collar encircles the neck and frames the face, offering great opportunities for design variations. Collars may be developed close to or away from the neckline. They may be wide, narrow, flat, or high and with or without an attached stand. The collar edge may be stylized or may follow a basic shape –it may be round, curved, scalloped, square, or pointed [long and short] in any direction. A great way to make your own clothes more unique is to add collars to the necklines of garments – this could be as simple as drafting a different collar for an existing sewing pattern or modifying an existing collar pattern to be more unique.

Collars are a type of neckline finishing, and they circle the neck, either quite closely, or further away. They come in different shapes, sizes, widths and styles but should always work to enhance the design of the garment you're attaching it to, and not just added as an afterthought.

As collars sit so close to a person's face, they will be very noticeable, which means you'll want to make sure that the collar is not only flattering to the wearer, but also that it is constructed beautifully.(Fig 1)

Fig 1

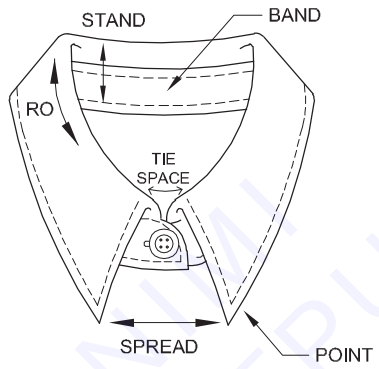

Collar classifications

Regardless of the collar design, the neckline edge generally has one of two basic shape:

1 Contrary to the neckline curve of the from or garment. This type of collar will spring open when unbuttoned- convertible.

2 Closely follows the curve of the neckline of the form or garment. This types of collar will stay in place when unbuttoned-nonconvertible.

Different Types of Collars

There are only three different collar types that can be used when constructing clothing:

- Flat Collar
- Stand Collar
- Roll Collar
- Shirt collar
- Mandarin collar
- Shawl collar
- Peter pen collar
- Sailor collar
- Band collar
- Nehru collar
- Wing collar

Flat Collar

A flat collar is a non-convertible collar, which means that it lies flat against the garment it has been created for. The best example of a flat collar is a Peter Pan collar, but other flat collars include a sailor's collar and a ruffle collar

© NIMI NOT TO BE REPUBLISHED

Stand Collar

A stand collar is a style of collar that 'stands up' against the neck. Mandarin collars, Nehru collars and funnel neck collars are all types of stand collars that stay in position.

Roll Collar

The roll collar is a collar style that rolls over, falling away from the neck. The most obvious is a shirt collar, created from a stand and collar. Another example would be the shawl collar.

Shirt Collar

This is the most common collar style and instantly recognizable.For many years, it was the collar style attached to shirts, but gradually over the years, as fashion has evolved, shirts now come with more relaxed collar styles, such as band collars, which help to give shirts a more relaxed feel. This would then be classified as a granddad style shirt, rather than the more traditional shirt we're used to with plackets, cuffs and flat-felled seams.

Mandarin Collar

A mandarin collar is also often referred to as a Chinese collar. It is constructed very much like the stand you find on a shirt collar, only with a traditional mandarin collar, the collar usually meets at center front only, rarely overlapping.

Shawl Collar

Shawl collars are often seen on coats, dressing gowns and dresses. It's a convertible collar type, folding over to form a fold line. A shawl collar can be narrow and elegant, or wider and more dramatic.

Peter Pan collar

One of my favorite collar styles is the Peter Pan collar! It is a flat, non-convertible collar and very easy to draft a pattern and sew. In fact, I have this tutorial on drafting a Peter Pan collar pattern.The Peter Pan collar is created by following the front and back necklines so it sits on top of the garment. As it doesn't have a stand, it doesn't 'fall away' from the neck either.

Sailor Collar

Sailor collars got their name from traditional sailor's uniforms. The collar is square on the back and creates a deep V on the front neckline. As well as appearing on sailor's uniforms, sailor collars are also very popular on children wear.

Band Collar

The band collar is added to garments like sleeveless summer tops or what we have come to know as granddad shirts. Usually they are quite narrow – less than an inch wide would be my recommendation! – And they either overlap at the center front with a small button opening, or can enclose a center front placket opening instead.

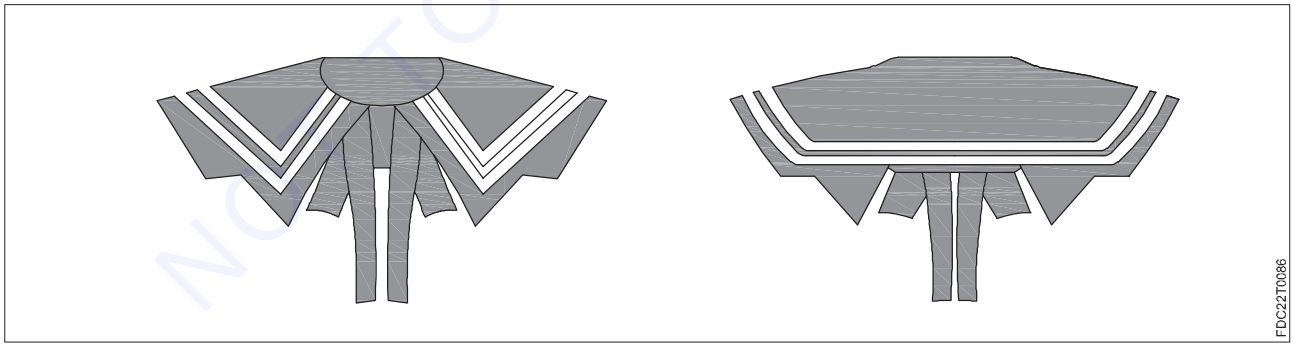

Nehru Collar

Nehru collars are often mistaken for Mandarin collars, because they are stand collars and meet at the front. Nehru collars are smaller though, and are found on traditional Indian clothing.

Wing Collar

A wing collar is quite a formal collar style. The collar itself is attached to a stand, and a section of the collar is pressed to resemble wings.

© NIMI NOT TO BE REPUBLISHED

Bias cut dresses

Introduction

Before the advent of bias-cut dresses, fashion garments required the use of girdles to harness the body .But afterwards, the designers created bias –cut dresses which clung to the natural curves of the figure. As the bias feel from the hip to the hem, flares were formed at the hemline. The beauty of the bias dress was in the graceful swing of its hemline as the body was in motion. Bias –cut dresses are timeless in style and continue to influence designers today.

Nature of bias –cut fabric

1 As bias stretches in length, its width decreases,

2 The lengthwise grain and cross grain run in opposite directions from the center of true bias.

3 The cross grain fibers are not twisted as tightly as the fiber of the lengthwise grain and fall more easily on the bias.

4 Where the cross grain and lengthwise grain intersect at true bias, the cross grain side hangs longer.

5 After the bias has stretch, it does not return exactly to its original shape.The nature of bias –cut fabric poses problems for the patternmaker. All garments cut of the bias should be test fitted to eliminate excess Created by the stretch of the bias.

Pattern making for bias-cut garments

Designs that are cut totally on the bias cut partially on the bias are discussed in this chapter.

Foundation patterns that are chosen as a base to develop bias –cut garments are not reliable, but they do serve the purpose of creating pattern shapes of the design. The garment is cut and joined either by using the long stitch by machine, by basting or by pinning in preparation for hanging overnight. The bias part of the garment will stretch beyond its original shape in the fitting to the curves of the form. The garment is chalk-marked around the form. The instructions include two methods for managing bias and adjusting the pattern.

Two methods for reducing bias stretch

Method 1

The garment is cut from the design pattern and allowed to stretch to determine the pattern corrections. The slip dress illustrmine the pattern corrections. The slip dress illustrates the method and management of the cutting process.

Method 2

The stretch of the fabric is determined first and the pattern is adjusted before the design patterns are developed. The all-in-one dress illustrates this method.

Fabric selections for bias-cut ferment

Light Weight Fabrics such as Crepe ,Flat crepe, Crepe de chine, Silk,Rayon blends etc. should be used which can be easily and effectively used in bias cut dresses.

Design variation of bias cut dresses (Fig 1)

Fig 1

FDC22T0087

NOT TO BE REPUBLISHED © NIMI

Grading

- Basic bodice
- Skirt
- Trouser

Grading – The process of increasing or decreasing the dimensions of a base pattern is called grading.

Grading of basic bodice

Grading is the method of enlarging or reducing a pattern of a particular size proportionately to some other size. Starting from a pattern drafted to a particular size, you can see patterns of other sizes (for the some other type of figure) by grading. Commercial patterns come in the bust sizes 32”, 34”, 36”etc (successive ones differing by 2” in size). To illustrate the grading procedure, it will be supposed that 32” size pattern is available and that using it as a basis, patterns of sizes 34”, 36”, 38” and 40” are to be prepared. Note first of all that for a 2” increase in bust size, the increase needed in the girth or width measurement on the half pattern is one-fourth of this. i.e., ½”. For a proportionate increase-in overall size, the pattern has to be also lengthened (by ½”. At shoulder level and the same at the centre back). Further, for each size increase, both the neck and shoulders have to be widened by 1/8” and the armhole by 1/4”. These general observations must be kept in mind when you go through the detailed procedures given below.(Fig 1)

Fig 1

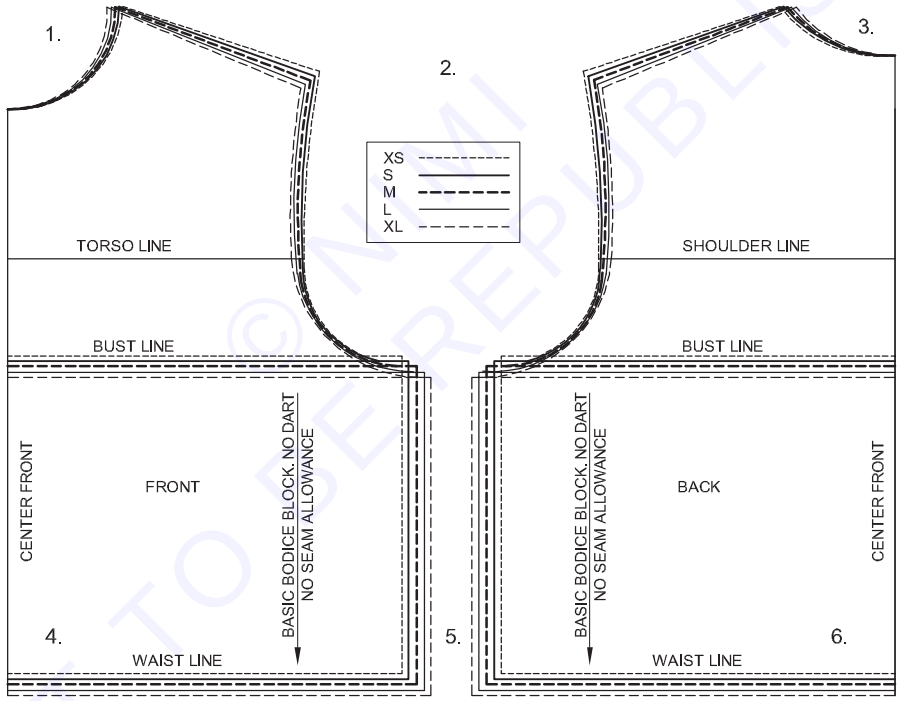

Grading of skirt

Each size is drawn since there are two different waist and hip girth increments when grading down the skirt pattern. The grade rules are shown in the illustration. The hip grade for the respective size is 1/4”hip girth increment whereas the grade rule for the wait grade is ¼ waist girth increment. (Fig 2)

© NIMI NOT TO BE REPUBLISHED

Fig 2

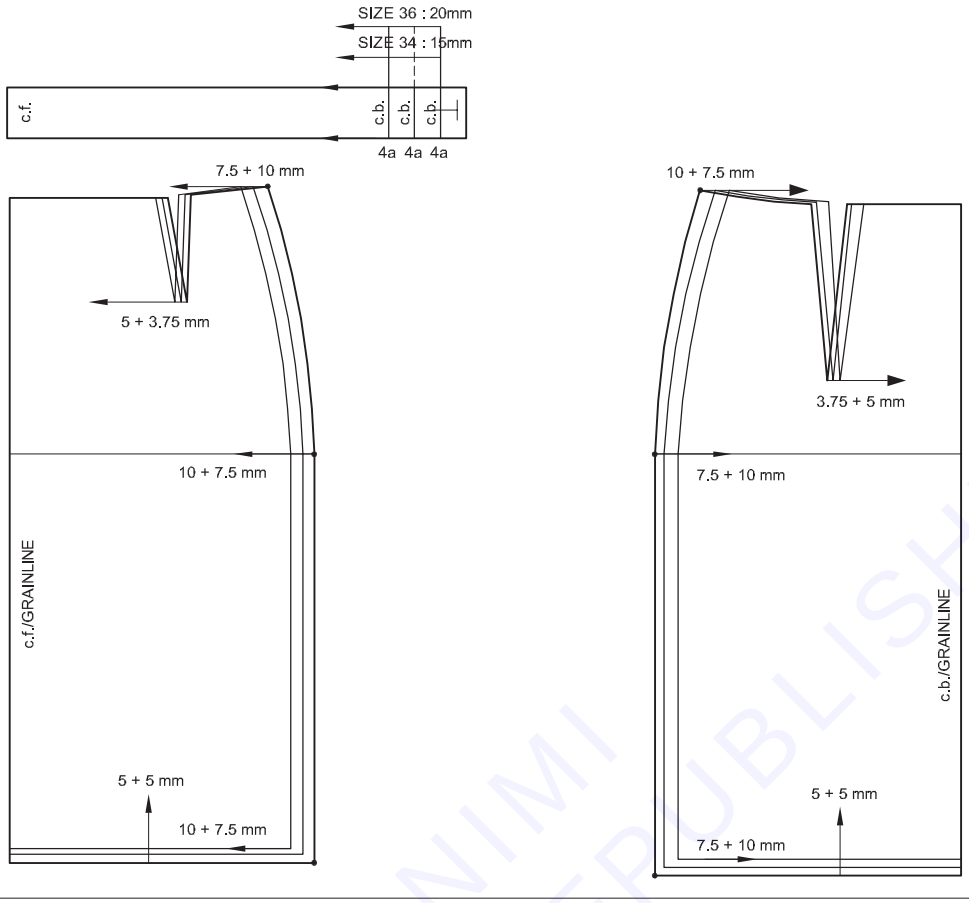

1 Increasing and decreasing patterns in size is not an easy task even within a CAD programme.

2 3a–4a Waistband grade is 1⁄2 waist girth increment for each size.

3 Grading Increment Calculations.

4 1–2 Hip girth: 1⁄4 hip girth increment = 50 mm.

5 3–4 Waist girth: 1⁄4 waist girth increment = (65)60 mm.

Grading of trouser

Grade from the base pattern in size 50 to the marginal sizes 44 and 58 and redraw with the base pattern. The sizes 46, 48 and 52, 54, 56 are equally divided (= interpolated). For the trousers grading, the construction lines of the centre, as well as the knee, hip and thigh lines are required. (Fig 3)

© NIMI NOT TO BE REPUBLISHED

Fig 3

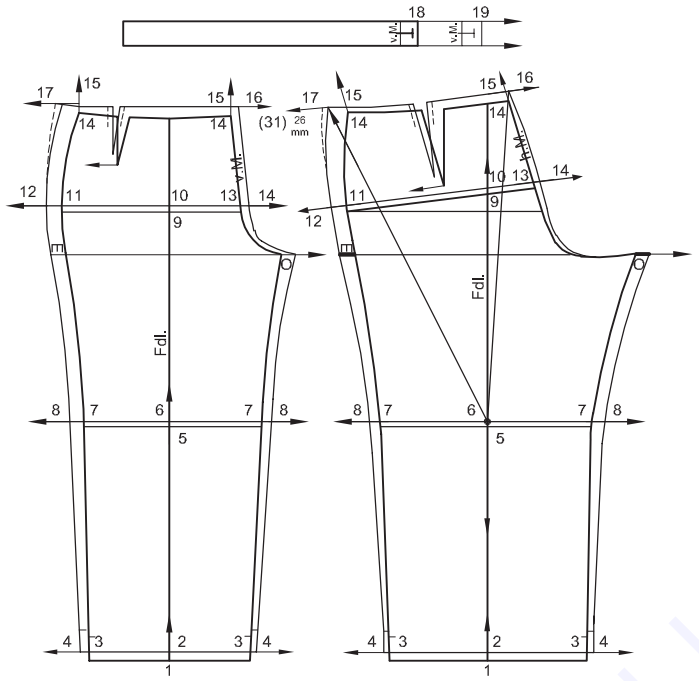

1 Draw the crease line on the front and back pattern before grading the trouser pattern.

2 1–2 Inseam: 16 mm, measure upward.

3 3–4 ¼ Hem width: 10 mm.

4 5–6 ½ Inseam: 8 mm.

5 7–8 ¼ Knee width: 15 mm.

6 9–10 Hipline: 1/10 of ½ hip girth difference = 6 mm.

© NIMI NOT TO BE REPUBLISHED

Creating design and manipulation

At the end of this lesson, you shall be able to

- manipulation of bodice block using draping method
- preparation of child and ladies basic bodice block, sleeve and hip block
- fitting problems and alteration in children and ladies garment

Manipulation can be done in the bodice block by changing the dart locations from one point to another point as per the required design variation. Dart manipulation is the technique of adjusting existing darts during the pattern making process. (Fig 1)

Fig 1

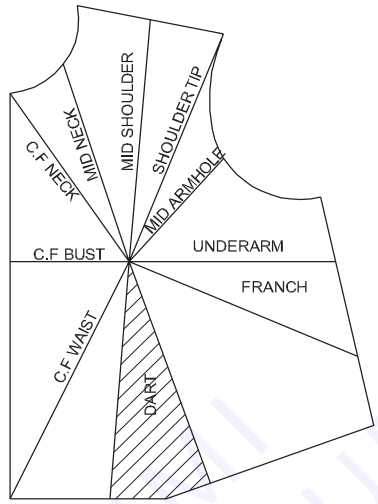

CREATING DESIGN / MANIPULATING USING BODICE BLOCK

FDC22T0091

Bodice block

Manipulation of Darts (Fig 2)

Fig 2

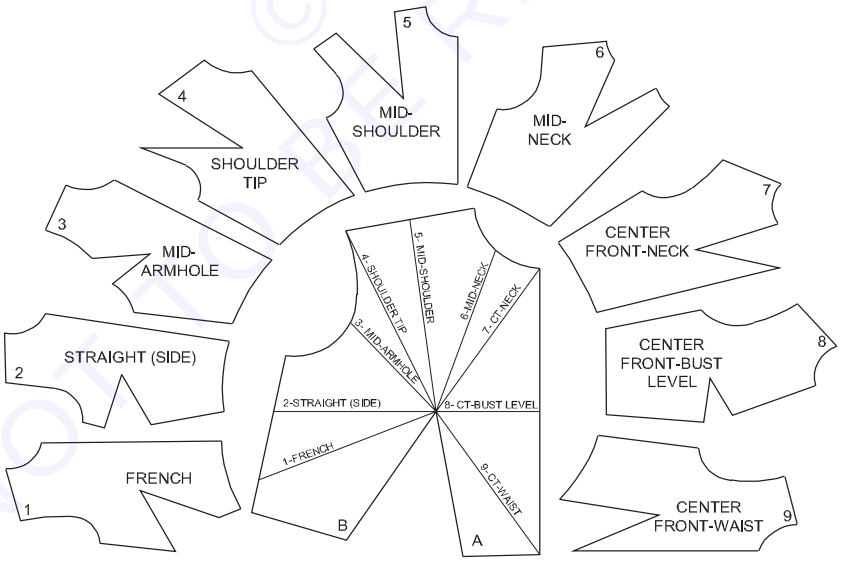

FDC22T0092

Following darts are shifted and adjusted from one location to another in bodice block as per choice and requirement of design.

- Standard Waist Dart
- French Dart
- Armhole Dart
- Mid-Shoulder Dart
- Centre Front Bust Dart

© NIMI NOT TO BE REPUBLISHED

- Centre Front Neck Dart
- Straight Side Seam Dart
- Shoulder Tip
- Mid-Neck Dart
- Centre Front Waist Dart

Draping method

It is considered an important method of pattern making and manipulation in fashion designing. Fashion Draping is the process of positioning and pinning fabric on a standard size dress form to Develop the structure of a garment design. A dress can be draped using a design sketch as a basis, or a fashion designer can play with the Way fabric falls to create new designs at the start of the dress design process. After draping, the toile fabric is removed from the dress form which was used to create the Sewing draped pattern for making fashionable dress to suit an individual. Draping is done with the help of muslin cloth. The techniques for draping fabric require the knowledge of the fabric's characteristics.

Draping a Flared Skirt

Steps in draping method are as following.

Draping Front of Skirt

1 When draping skirts begin by raising the form to a convenient height. Align the cross grain of the muslin with the Horizontal Balance Line (HBL) and pin the fold of muslin to the centre front using opposing pins. Make sure that you have at least 5" of fabric above waistline (This fabric will be dropped down to create the flare).

2 Place a temporary holding pin at the side seam at the HBL.

3 Smooth muslin from centre front to Princess line.

4 Pin at waist. Trim excess fabric at waist from centre front to Princess line. (Cut a square of fabric away, cutting straight up the grain from the princess line). Smooth and re-pin at princess line.

Front Flare

5 Clip to the waist right at the princess line You will drop the muslin down from this point to form the flare.

6 Release holding pins at the side.

7 Rotate the excess fabric in a counterclockwise direction dropping the fabric down to form the flare.

8 Pin at waist. Trim excess fabric at waist from Princess line to side seam, clip seam.

Front Ease:

9 Pin 1/4" (total) ease tuck at waist.

10 Clip to waist and re-pin side seam.

11 Smooth fabric down side seam. Pin to side seam at bottom of seam.

12 Mark centre front at waist.

13 Dot waist. Mark side waist.

14 Pin the flare together right at the base of the form and measure.

15 Pencil rubs the side seam.

16 Mark side seam right at form base. At base of form mark measurement-B straight out (perpendicular to the side seam) from this mark.

17 Trim side seam

18 Once front panel is fully marked and trimmed fold it away from the side seam and pin.

Draping Back Of Skirt

19 Align the cross grain of the muslin with the Horizontal Balance Line (HBL) and pin the fold of muslin to the centre back using opposing pins.

20 Place a temporary holding pin at side seam at the HBL.

© NIMI NOT TO BE REPUBLISHED

21 Smooth muslin from centre back to Princess line and pin at waist.

22 Trim excess fabric at waist from centre back to Princess line (cut straight up the grain from the princess line). Smooth and re-pin at princess line.

23 Clip to waist right at Princess line.

Back Flare

24 Release holding pins and rotate the excess fabric in a clockwise direction dropping the fabric down to form the flare.

25 Measure flare right at base of form. Adjust the fold until the measurement matches the measurement A-B from the front drape (Lift the fabric higher at the waist to make the flare smaller, lower it to make the flare larger).

26 Pin at waist and trim excess fabric at waist from princess line to side seam, clip seam.

Back Ease

27 Pin a 1/4" (total) ease tuck at waist.

28 Clip to waist and re-pin side seam.

29 Smooth fabric down the side seam. Pin the fabric to the to side seam right at the base of the form.

Mark Back Muslin

30 Mark centre back and dot waist.

31 Mark waist at side seam.

Back Side Seam

32 Pencil rub side seam.

33 Cross mark at side base of form.

34 Mark A-B measurement straight out from this mark.

35 Trim side seam.

Pin Test

36 Fold the side seam of the front muslin from side waist mark to side flare measurement. Crease.

37 Pin front to back at waist, pin should be perpendicular to the folded seam. Do not pin to form.

38 Pin at flare base and continue to pin up entire side seam, keeping all pins perpendicular to the seam.

Hem

39 You can mark the hem either at the bottom of the form or at one of the wires of the cage on the bottom of the form. Mark the hem at Canter Back and canter front.

40 Smooth the side seam down the form and mark hem at side.

41 Smooth each section of skirt straight down from the waist to mark the hem at two or three locations in the back panel.

42 Repeat on front panel and trim muslin to within 11/2" of marked hem. Take the muslin off the form and unpin the side seam. Balance the side seam, then re-pin the muslin to pin test the drape.

Finished Drape

43 Side view of finished drape. The side seam should hang straight, perpendicular to the floor.

44 Back view of finished drape. The centre back fold should hang straight.

45 Front view of finished drape. The canter front should hang straight.

© NIMI NOT TO BE REPUBLISHED

Manipulation shown by draping method at front, back and hem of a flared skirt

© NIMI NOT TO BE REPUBLISHED

Preparation of basic child bodice block

To prepare a basic bodice block for children, following measurements are required.

Child Bodice Block

Body Measurements

Chest = 22 inches

Waist = 21.5 inches

Cross back = 9 inches

Waist length = 9 inches

Finished Dress Length = 20 inches

Constructions Lines of bodice block

1 Draw a line segment AB of 12” (1/9 of chest + 1).

2 Draw another line segment BC of 9” (waist length).

3 Join AD and DC. Mark the midpoint of AD as E.

4 Mark the Midpoint of AE as F.

5 Mark the midpoint of AF as G.

6 Mark a point H on AB so that AH = 2.2” and point O on AD so that AO = ½”. Join OH by drawing a curve.

7 Mark a point I on GG’ so that GI is 4.5” (½ of cross back).

8 Join HI and extend it to J so that IJ = 1/2”.

9 Drop a perpendicular from I on EE’.

10 Mark the midpoint of EE’ as K. Join JK by drawing a curve.

11 Drop a perpendicular from K on DC at L.

12 Mark points M and M’ on either side of L (½ “) Join KM and KM’.

13 Mark a point H’ on AB so that H’B = 2.2” and N on BC so that BN = 2.5”.

14 Join HN by drawing a curve.

15 Join H’I and mark a point J’ on H’I so that H’J’ = HI.

16 Drop a perpendicular from J’ on EE’ meeting FF’ at P.RP = ½”.

17 Draw a curve joining points J’,R and K. (Fig 1)

Fig 1

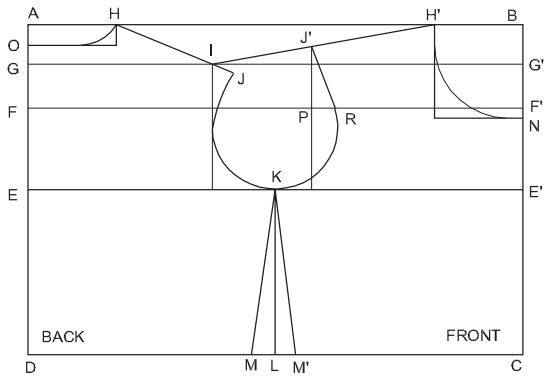

CHILD BODICE BLOCK

FDC22T0093

NOT TO BE REPUBLISHED © NIMI

Preparation of basic child sleeve block

Child Sleeve block

Body measurement

Sleeve length: 5inches

Chest: 22inches

Construction lines

1 Draw a line segment AD of 5” (sleeve length).

2 Draw a line segment AB of 5” (1/4 of chest – 1/2”).

3 Draw a line segment AB of 5” (1/4 of chest – 1/2”).

4 Draw BC || AD and DC || AB. Mark a point E on BC so that BE = 2.4” (1/9 of chest). Join AE.

5 Divide AE into four equal parts namely AH, HO, OP and PE.Mark a point H’ above H so that HH’ = ¼”. Similarly, mark a point O’ above O so that OO’ = ½”. Mark a point P’ below P so that PP” = ¼”. Remember! The points taken should be perpendicular to AE.

6 Draw a curve joining A, O’, and E. Draw another curve joining A, H, O, P’, and E.

7 Mark a point F on DC so that FC = 1”. Join EF.

8 Mark a point G on EF so that GF = 1/4”. Join DG by drawing a curve. (Fig 1)

Fig 1

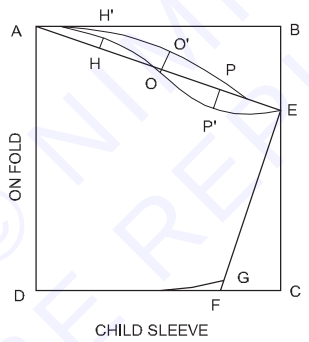

Preparation of Basic Ladies bodice block

Ladies

Body measurements

- Bust: 88 cm.
- Nape to waist: 40 cm.
- Waist to hip: 20.6 cm.
- Armhole depth: 21 cm
- Neck size: 37 cm.
- Shoulder: 12.25 cm.
- Back width: 34.4 cm.
- Dart: 7 cm.
- Chest: 32.4 cm.

© NIMI NOT TO BE REPUBLISHED

Construction lines

1 Square down from 0.

2 Square halfway across the block 0 to1 is 1.5 cm.

3 1 to 2 is armhole depth +0.5 cm (21.5cm).

4 Square across.2 to 3 is ½ of bust measurement +5 cm.

5 Square up and down. Mark this line the center front line (49 cm).

6 3 to 4 is equal to 0 to 2. 1 to 5 is nape to waist measurement (40 cm).

7 Square across to 6.

8 5 to 7 is waist to hip measurement (20.6 cm).

9 Square across to front line and mark point 8 (this gives ½ of hip measurement +2.5 cm).

10 Back:

11 0 to 9 is 1/5 neck size – 0.2 cm. (7.2 cm).

12 Draw in back neck curve 1 to 9.

13 0 to 10 is 1/5 of armhole depth measurement – 0.7 cm (3.7 cm).

14 Square halfway across the block.

15 9 to 11 shoulder length measurement + 1 cm (13.25 cm).

16 Draw back shoulder line to touch the line from 10.

17 12 is center of shoulder line.

18 12 to13 draw a dotted line 5 cm long and sloping in wards 1cm.

19 Construct dart 1 cm wide, with this line as center(mark both sides of dart the same length).

20 2 to 14 is half back width + 0.5 cm (ease) (17.7 cm).

21 Square up to 15.

22 14 to 16 half the measurement 14 to 15.

23 17 midway between 2 and 14.

24 Square down with a dotted line to point 18 on waist line and to point 19 on hip line. (Figure 1) Front:

25 4 to 20 is 1/5 neck size =0.7 cm (6.7 cm).

26 4 to 21 is 1/5 neck size = 0.2 cm (7.2 cm).

27 Draw in front neck curve 20 to 21.

28 3 to 22 is ½ chest measurement + ½ width of dart measurement 19.7 cm.

29 Square up 3to 23 is ½ the measurement 3 to 22.

30 Square down with a dotted line to point 24 on waist line and point 25 on hip line.

31 26 is the bust point, 2.5 cm down from 23.

32 Draw a line joining 20 to 26.

33 20 to 27 is dart width measurement.

34 Draw a line joining 26 to 27.

35 11 to 28 1.5 cm. square out approximately 10 cm to 29.

36 27 to 30, draw a line from 27 shoulder length measurement to touch the line from 28 to 29 (12.25 cm).

37 22 to 31 is 1/3 the measurement 3 to 21.

38 32 is midway between 14 and 22.

© NIMI NOT TO BE REPUBLISHED

39 Square down with a dotted line to point 33 on waist and 34 on the hip line.

40 Draw armhole touching point 11,16, 32,31and 30. (Fig 1)

Fig 1

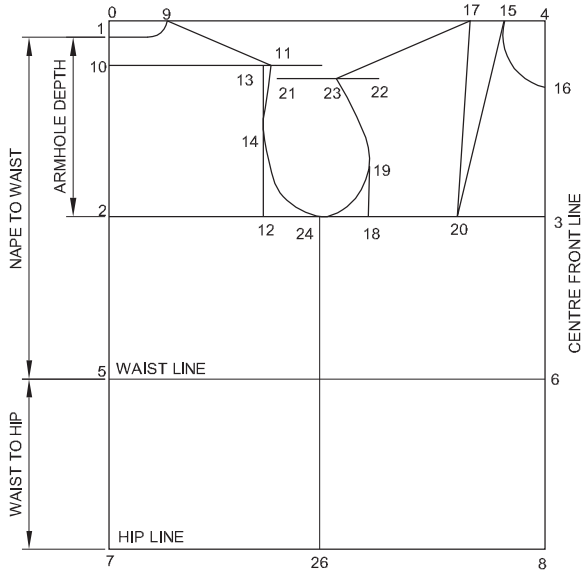

Preparation of Basic Sleeve block

Ladies

Body measurements:

Sleeve length: 14 inches

Round Arm: 10 inches

Construction line:

1 0 to1 draw a vertical line of sleeve length.

2 0 to 2 is ¼ chest = 1/2 “.

3 Join 1to 3 and 2 to 3.

4 2 to 4 is 1/12 of chest.

5 1 to 5 is ½ round arm.

6 Join 4 to 5 join 0 to 4 and divide it into four equal parts

7 namely 0 to 6, 6 to 7, 7 to 8, and 8 to 4.

8 From 6 go up 1/2” and from 7 go up ¾”.

9 From 8 go down 1/2’’.

10 For front armhole join 0,6’, 7, 8’, and 4.

11 For back armhole join 0,7and. (Fig 1)

Fig 1

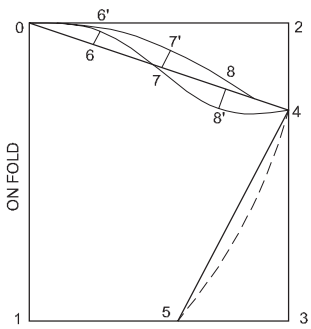

© NIMI NOT TO BE REPUBLISHED

Hip block

Measurements needed

1 Skirt length (from waist to the length you desire---this is waist to knee, in my case, minus the waistband width, which is 1.375 inch)

2 Hip round

3 Waist round

Pattern draft:

Skirt (front and back):

A-B = hip round/4

A-C = 3/4 inch

Join B and C with a curvy line.

C-D = skirt length

D-E = hip round/4 + 3 to 4 inches (for ladie sizes, add 5 to 7 inches)(Note: If we use the waist measurement for A-B, we won't be able to pull the skirt up as it will be too tight at the hip as there is no opening for fastenings like a zipper anywhere in the skirt. That's why we use the hip measurement. This is applicable for non-stretchy fabrics.)

E-F = 3/4 inch (for ladies, this is 1 to 1.5 inches)

Shape hemline D-F.(Fig 1)

Fig 1

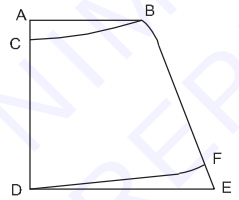

Waistband

A-B = C-D = hip round

A-C = B-D = usually 3 inches

Add seam and hem allowances to the pattern pieces. (Fig 2)

Fig 2

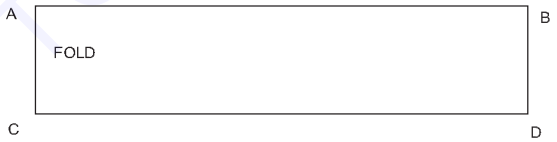

Fitting problems and alteration in children and ladies garments

Fitting problems and alterations can vary depending on the style and construction of the garment, as well as the individual's body shape. Some common fitting issues and alterations for children's and ladies' garments are as following.

Fitting problems for children's garments

1 **Length Issues:** Sleeves or pant legs may be too long or too short.

2 **Width Issues:** Garments may be too tight or too loose around the chest, waist, or hips.

3 **Shoulder Fit:** Shoulder seams may be too wide or too narrow.

4 **Armhole Depth:** Armholes may be too tight or too loose.

5 **Growth Allowance:** Children grow quickly, so garments may become too small before they are worn out.

© NIMI NOT TO BE REPUBLISHED

Fitting problems for Ladies' Garments

1 **Bust Fit:** Garments may be too tight or too loose around the bust area.

2 **Waist Fit:** Waistbands or bodices may be too tight or too loose.

3 **Hip Fit:** Garments may be too tight or too loose around the hips.

4 **Shoulder Fit:** Shoulder seams may be too wide or too narrow.

5 **Armhole Depth:** Armholes may be too tight or too loose.

6 **Length Issues:** Skirts or pants may be too long or too short.

Common Alterations:

It's essential to assess each fitting issue individually and make alterations accordingly.

1 **Shortening or Lengthening:** Adjusting the length of sleeves, pant legs, or skirts to fit the individual's height.

2 **Taking in or Letting Out:** Altering the width of garments around the chest, waist, or hips to achieve a better fit.

3 **Adding Darts or Gussets:** Adding darts or gussets to improve the fit around the bust, waist, or hips.

4 **Adjusting Shoulder Seams:** Narrowing or widening shoulder seams to improve the fit.

5 **Reshaping Armholes:** Adjusting the shape and depth of armholes for better comfort and mobility.

6 **Adding or Removing Ease:** Increasing or decreasing ease in garments to achieve a more comfortable fit.

7 **Grading Between Sizes:** Adjusting patterns to accommodate differences in measurements between sizes.

Children's Garments alterations

1 **Growth Allowance:** Leave extra seam allowance or add removable hems to allow for growth.

2 **Length Adjustment:** Shorten or lengthen sleeves, pant legs, or skirts as needed.

3 **Width Adjustment:** Take in or let out the width around the chest, waist, or hips to accommodate changes in body shape.

4 **Ease Adjustment:** Increase ease in garments to allow for movement and play.

5 **Shoulder Adjustment:** Narrow or widen shoulder seams to improve fit.

6 **Armhole Reshaping:** Adjust armhole shape and depth to ensure comfort and mobility.

7 **Crotch Depth:** Adjust the crotch depth in pants for better fit and comfort.

8 **Neckline Alterations:** Modify the neckline shape or width for better fit and style.

Ladies' Garments alterations

1 **Bust Adjustment:** Add or remove bust darts, or adjust princess seams for a better bust fit.

2 **Waist Adjustment:** Take in or let out the waist to achieve a more flattering silhouette.

3 **Hip Adjustment:** Adjust the hip width or add darts for a better fit around the hips.

4 **Shoulder Slope:** Correct the slope of the shoulder seam for improved fit and comfort.

5 **Armhole Adjustment:** Alter the shape and depth of the armhole to prevent restriction of movement.

6 **Bodice Length:** Lengthen or shorten the bodice to match torso length.

7 **Skirt Length:** Shorten or lengthen skirts to suit height and preference.

8 **Back Darts:** Add or adjust back darts for shaping and fit around the waist and back.

© NIMI NOT TO BE REPUBLISHED

Sizing and taking measurement specific to Men's wear

Objectives: At the end of this lesson, you shall be able to:

- about sizes and taking measurement of men's wear
- drafting of Men's Basic Shirt Block with Variations
- variation of cuffs and collars
- drafting of Basic Trouser Block.

When taking size and measurements for men's wear, it's essential to accurately capture key body dimensions to ensure proper fit and comfort. Here are the specific measurements typically taken for men's wear (Fig.1)

Men's Measurement Size chart

MAIN							
Size	Collor	Chest	Shoulder	Full-Sleeve Length	Half - Sleeve Length	Shirt Length	Sleeve + Half Across Shoulder
38 | XS	14.7	39	17	24	7.5	27	32.5
39 | S	15	41	17.5	25	8	28	33.2
40 | M	15.7	44	18.5	25.5	9	29.5	34.7
42 | L	16.5	47	19.5	26	9.5	30.5	35.7
44 | XL	17.3	51	20.5	27	10.5	31.5	37.2
46 | XXL	18.1	55	21.5	27	10.5	32	37.7
48 | 3XL	18.9	58	21.5	27	10.5	32	37.7
50 | 4XL	19.7	60	22	27	10.5	34	38
52 | 5XL	20.5	62	22	27	10.5	34	38

All measurements are in inch
and have a tolerance of +/- 0.5 Inch

1 **Chest:** Measure around the fullest part of the chest, under the arms and across the shoulder blades. Ensure the tape measure is snug but not tight.

2 **Waist:** Measure around the natural waistline, typically located above the belly button and below the rib cage. Take this measurement while standing comfortably.

3 **Hip:** Measure around the fullest part of the hips, usually at the widest point of the buttocks. Ensure the tape measure is parallel to the floor.

4 **Shoulder Width:** Measure from the outer edge of one shoulder to the outer edge of the other shoulder, across the back.

5 **Back Length:** Measure from the base of the neck (where the shoulder meets the neck). to the natural waistline.

6 **Sleeve Length:** Measure from the shoulder seam to the desired length of the sleeve, typically to the wrist bone.

7 **Neck Size:** Measure around the base of the neck, where the collar would normally sit. Ensure the tape measure is snug but not tight.

8 **Out seam:** Measure from the top of the waistband to the bottom of the pant leg, along the outside of the leg.

9 **Thigh:** Measure around the fullest part of the thigh, typically a few inches below the crotch.

10 **Bicep:** Measure around the fullest part of the upper arm, ensuring the tape measure is parallel to the floor.

11 **Shirt Length:** Measure from the base of the neck down to the desired length of the shirt, typically to the hip bone.

Drafting of Basic Shirt Block

Shirt Back Foundation

A–B Full length to waist.

© NIMI NOT TO BE REPUBLISHED

Draw line to waist. Mark and continue line to desired shirt length. Mark and label C.

A–D Across shoulder.

Square from A and square down about 4”.

B–E Center length. Mark and square from E.

B–F One-half of B–A, less YM 1 1/4”. Mark.

MM 1 1/2”. Mark.

F–G Chest plus 1-1/4”. Mark and square from F.

B–H F–G. Square from B.

C–I F–G Square from C.

Connect I, H to G.

F–J Across back plus 1/2”. Mark.

J–K Square up one-third of JM.

A–L Back neck plus 1/8”.

B–M Shoulder slope.

Line touches D guideline.

L–N Shoulder length plus 1/2”.

Line touches and passes through M.

Square down from L to intersect with line E.

Draw neckline curve. (Fig 1)

Fig 1

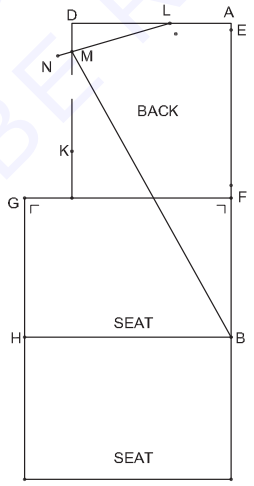

Armhole shape:

Draw 1 1/4” diagonal line from J.

Draw armhole touching N, K, angle line, and G.

Indent side waist 1/2” to 3/4”. Draw hemline curve and side seam.

Cut the back foundation pattern from paper. (Fig 2)

© NIMI NOT TO BE REPUBLISHED

Fig 2

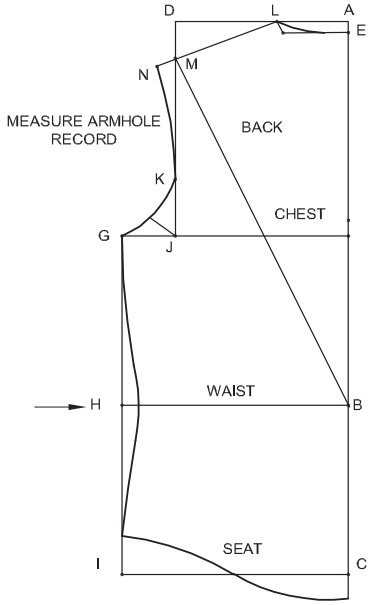

Front Left Shirt

Turn back pattern over and lightly draw from G downward and around pattern to F (chest line).

Continue with the instructions.

B–H Full length, continue line from H.

H–I Across shoulder plus 1/2”

Square from H and square down 4 inches.

B–J Slope line touches guideline.

H–K A–L of the back neck.

K–L Shoulder length, plus 1/2”.

Line may pass J.

Square a line down from K-L line (Fig 3 a).

Fig 3a

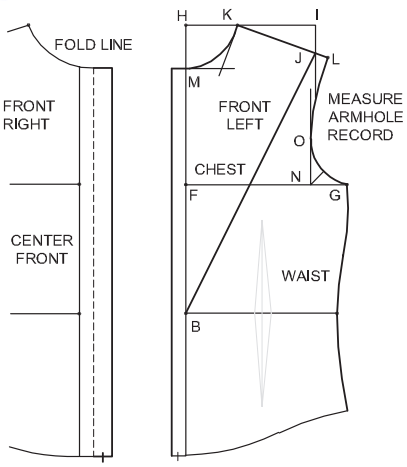

B–M Center front length, less 3/8” and square to K line. Draw neckline with a curve rule.

© NIMI NOT TO BE REPUBLISHED

F–N Across chest, plus 1/4”. Square up 4”.

Label O.

Armhole shape: Draw 1-1/8” diagonal line from N.

Draw a 3/4” wide extension line parallel with the center front. Cut the pattern from paper (a).

Front left: Turn front pattern over and trace.

Draw a 1-1/4” parallel line to the extension. Mark

fold line and notch 3/4” out from center (b).

Cut the pattern from paper.(Fig 3 b)

Fig 3b

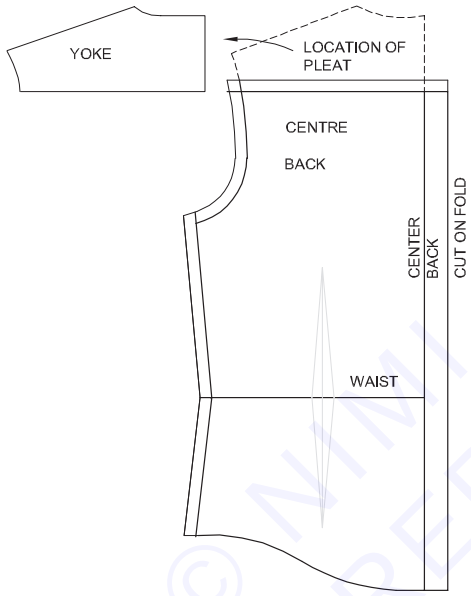

Yoke

Trace the front and back foundation patterns.

Back

- Mark 3” down from center back neck and square across the pattern for yoke line. Below yoke line, add 1 1/4” for pleat (if desired). Mark location of the pleat.
- Cut the pattern and separate the yoke.

Front

- Draw a line 1 1/4” down from the front shoulder tip and draw a parallel line with shoulder. To complete the yoke, cut pattern and separate up-per part (b).
- Add 1/2” seam to the lower pattern and cut.(Fig 4)

© NIMI NOT TO BE REPUBLISHED

Fig 4

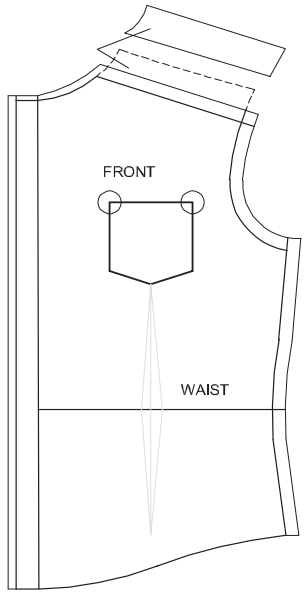

Completing the Yoke

Match front and back yoke shoulder lines and trace. Add seams, and notch shoulder tip and neck. (Figure 5)

Pocket

Draft the pocket; use measurements as a guide. Draw pocket on the shirt, and mark guide marks for placement. (Fig 5)

Fig 5

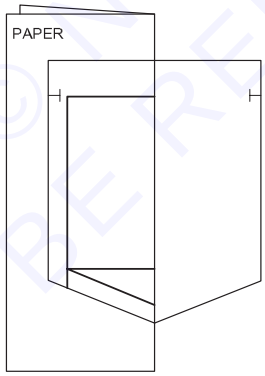

Additional Information

Dart locations are shown if a closer fit on the front and back shirt is desired. Pin dart intake and taper side seams at the time of the fitting and do not include the back pleat. Sleeve cap ease should not be more or less than3/8” to 1/2 inch.

Puckering around the armhole: indication that sleeve cap needs more ease. Puckering along the sleeve cap: indication thatthere is too much cap ease.

Correct the biceps line by adding to or decreasing both sides of the bicep to adjust needed amount.

Shirt Sleeve Measurements (Fig 6 a)

A–B Sleeve length less 2-1/2” for cuff.

A–C Cap height less 1/2”.

Square out from each side of C.

C–D Biceps. Mark one-half of bicep.

C–E C–D

© NIMI NOT TO BE REPUBLISHED

Draw lines from D and E to A.

Divide into fourths. Square out and mark measurements given. Use curve rule touching each point.

Hemline: See Figure 7 for cuff length. Add to the measurement two 1 1/4” pleats (2 1/2”)

and square out equally from B to F and to G.

Draw lines from F to D, and G to E.

Slit placement: Half the distance from B to G,

less 1/2”. Slit length is 5 1/2”. See (Fig 6 b).

Walk the sleeve to armhole, and mark notches: 1 notch front and 2 notches in back. (Ease allowance about 1/2 inch. Adjust

Fig 6a

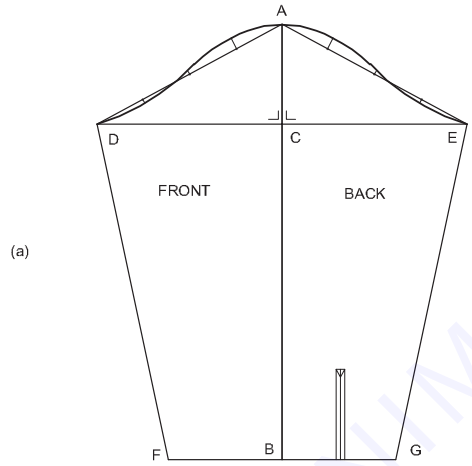

Fig 6b

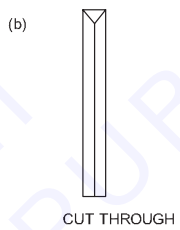

FDC22T0105

Cuff

Measure hand for entry measurement and add 1/2”,

or choose a size from the following.

Small 9”, Medium 9-1/2”, Large10.

Cuff includes 1” extension for button placement.Fig 7

Width of cuff 2 1/2”. See example (b). (Fig 7a, 7b)

Fig 7a

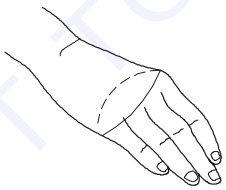

(a)

Fig 7b

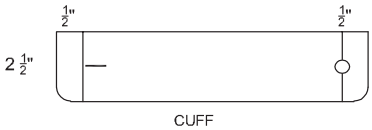

(b)

FDC22T0106

Collar and Stand

Draw a rectangle 1-3/8” wide and length of the neck-line measurement, A to B, plus 3/4”. Mark C. Square up from C. Mark shoulder notch, D.

Mark 1/2” up at C. Draw curve lines from C to B end end at D to complete collar stand. Cut from paper.

Collar: Trace collar stand. Draw collar shape, using

measurement given (b).

Cut collar, slash and spread, as shown (c). Trace and cut two copies and interfacing. Repeat for collar stand. (Fig. 8 a, b, c)

© NIMI NOT TO BE REPUBLISHED

Fig 8

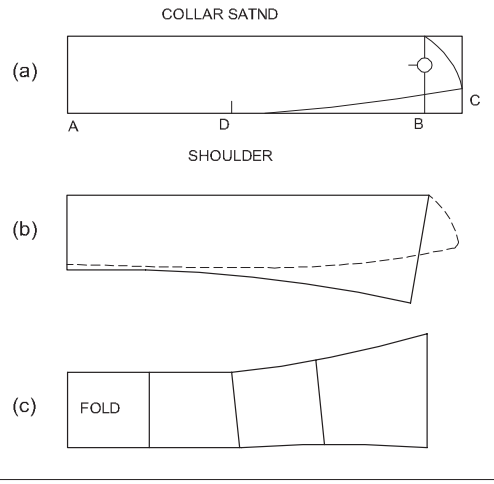

Placket Design

Binding

Length 5 3/4”, width 1-1/2”. Includes 1/4” seams. (Fig 9)

Fig 9

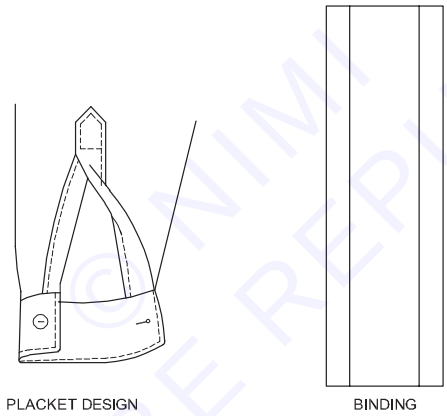

Placket

A–B 7”. Draw line.

- Mark on line: A to C 3/8”; A–D = 1-5/8”.
- Square out from A, B, C, D, as follows:

A 1”. Label E. Mark X at center of A–E.

C 1-1/2” and label F.

D 2” and label G.

B D–G and label H (a).

- Square down from X, E, F, and G to B–H line (b).
- Extend G line up 1/2”.
- Square in from G and mark slit 1/4” (b).
- Add seams as indicated, and mark buttonhole at

center between D–B levels (c). (Figures 10 a-c)

NOT TO BE REPUBLISHED © NIMI

Fig 10

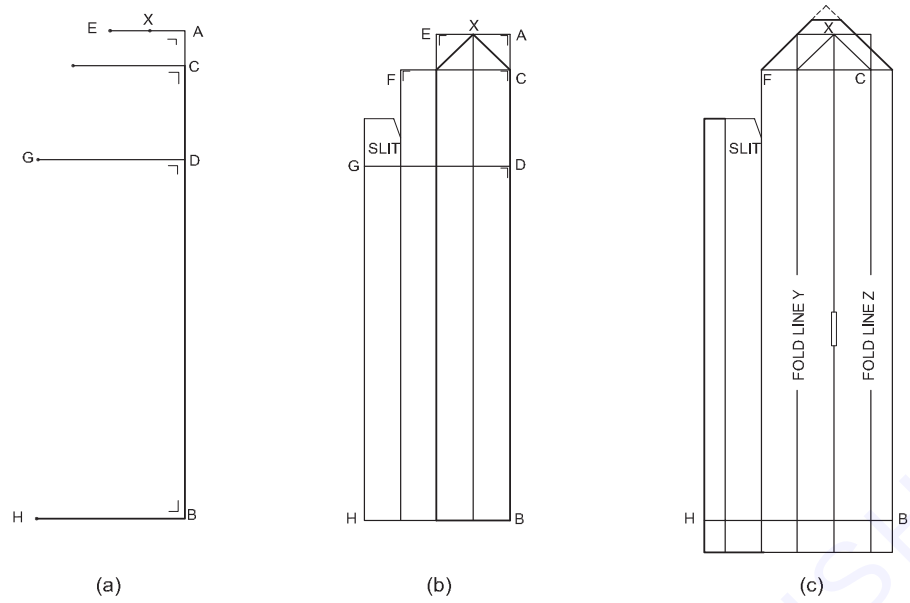

Binding

- Press a 1/4” seam on the wrong side. Then place right side of binding to the wrong side of the sleeve slit. Stitch up to the angle cut (a).
- Turn binding over and edge-stitch.
- Move shirt away to complete the stitching (b).
- Place placket under the slit line with wrong sides together.
- Stitch a 1/4” seam to the end of the slit line; back-stitch (c). (Figures 11 a, b, c)

Fig 11

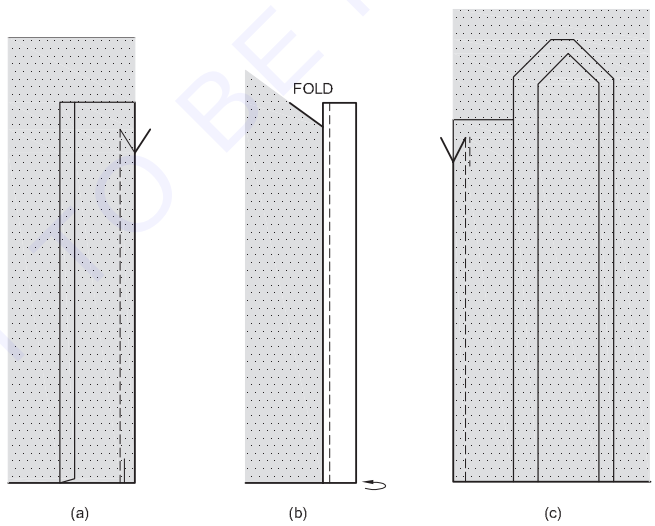

- Turn placket outward. Fold the1/4” seam to face the placket.
- Fold 1/4” on Z line.(Fig 12)

© NIMI NOT TO BE REPUBLISHED

Fig 12

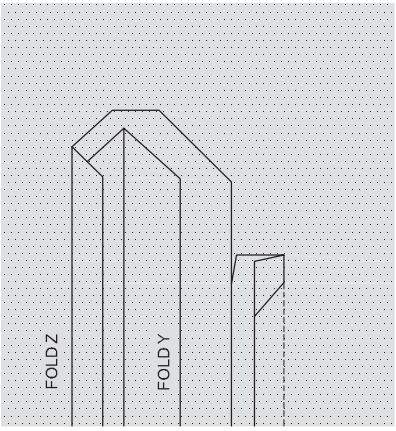

FDC22T0111

- Turn to the back placket. Bring up the slit point and stitch across.
- Turn placket to right side, folding on the Y line. (Fig 13)

Fig 13

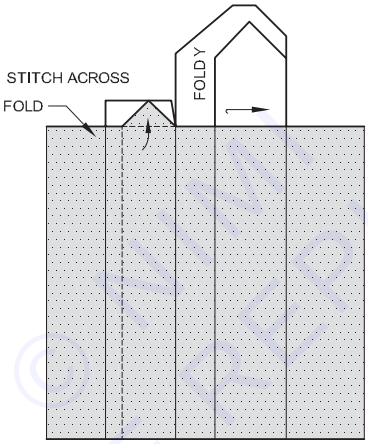

FDC22T0112

- Place the Y fold on the stitch line.
- Edge-stitch the placket, as shown.

Placket covers the internal part.(Fig 14)

Fig 14

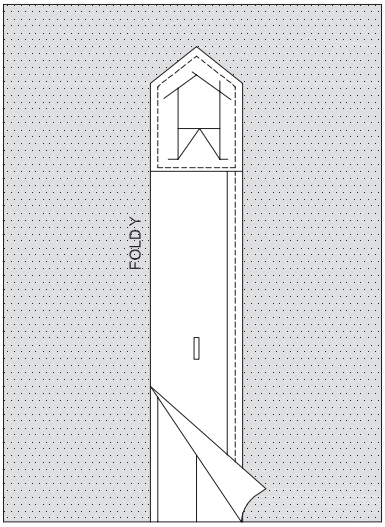

FDC22T0113

© NIMI NOT TO BE REPUBLISHED

Shirt Front Facing

Left side of the front shirt

Trace part of the neckline with extension and hem.

Draw a parallel line 3/4” on both sides from center front, a total width of 1 1/2” (a).

Add 1/2” seams to each side of the facing and 1/4”seams at the neckline and hem (b).

Cut from paper.

Sewing Guide

Cut shirt and facing in fabric. Fold 1/2” seams on both sides of the facing and press (c). (Fig 15a, b, c)

Fig 15

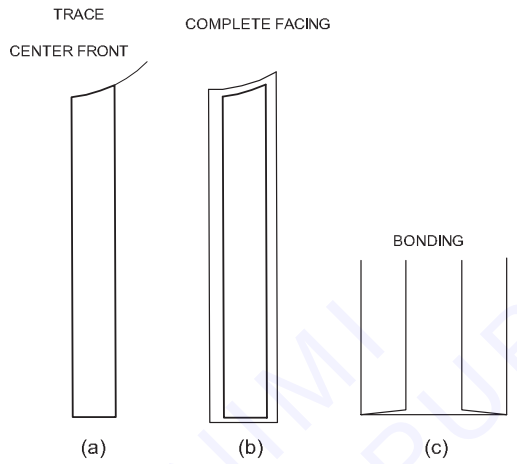

- Place right sides together. Lay the seam edge of the shirt to seam edge of the facing fold, and sew1/4” through the length of the fold (a).
- Turn the facing on the fold line to the shirt, and top-stitch 1/4” in from the fold (b).
- Continue to the length of the shirt (c).

Right side of the shirt

- Fold facing at the extension notch, and foldunder 1/4” seam allowance and edge-stitch through the length of the front shirt (d). (Fig 16 a to 16 d)

Fig 16

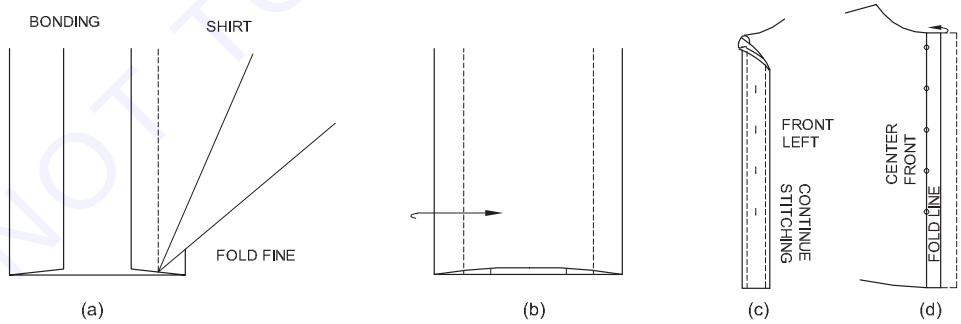

© NIMI NOT TO BE REPUBLISHED

Variation Of Shirts: Classic/slim fit shirt

Objectives: At the end of this lesson, you shall be able to:

- about sizes and taking measurement of men's wear
- drafting of Men's Basic Shirt Block with Variations
- variation of cuffs and collars
- drafting of Basic Trouser Block.

Variations of classic and slim-fit shirts refer to differences in the fit and silhouette of the shirt. Here's a comparison between classic and slim-fit shirts:

1 **Fit:** Slim fit shirts are more tailored and closely fitted to the body. They have narrower cuts through the chest, waist, and hips, creating a sleek and modern silhouette.

2 **Silhouette:** The silhouette of a slim fit shirt is narrower and more tapered compared to a classic fit shirt. It accentuates the natural contours of the body for a more tailored look.

3 **Sleeves:** The sleeves of a slim fit shirt are slimmer and have less excess fabric compared to a classic fit shirt. They are designed to follow the shape of the arm closely for a sleek appearance.

4 **Shoulders:** The shoulder width of a slim fit shirt is slightly narrower compared to a classic fit shirt. This helps to create a more streamlined look without excess fabric in the shoulder area.

5 **Style:** Slim fit shirts are popular for their modern and fashionable appearance. They are ideal for individuals who prefer a more tailored look or want to achieve a sleek silhouette.

Overall, both classic and slim-fit shirts offer different styles and fits to cater to individual preferences and body types. Classic fit shirts provide a comfortable and timeless look, while slim fit shirts offer a more tailored and contemporary appearance.

Slim fit men's shirts come in various styles and designs to suit different tastes and occasions. Here are some variations:

1 **Classic Slim Fit Shirt:** This is the standard slim fit shirt, with a tapered waist and narrower sleeves for a tailored look.

Front and Back

You will need the following tools:

- Tape measure
- Clear graphing ruler
- French curve set, or Design ruler
- Regular pencil and eraser
- Paper, ideally with a printed graph

And the following measurements:

- Height
- Chest circumference
- Waist circumference
- Hip circumference
- Shoulder width
- Shoulder length
- Neck circumference
- Neck-waist length
- Neck-hip length

Add 2 3/8″ along center front for a placket. Add desired seam allowances to neck edges, shoulder seams, armscye, side seams. If you're making a yoke, add seam allowances to each side of line F, and add 1″ to the shoulder seam on the yoke and take 1″ off the shoulder seam on the front. Add 3/4″ along bottom curve for hem. (Fig 1)

© NIMI NOT TO BE REPUBLISHED

Fig 1

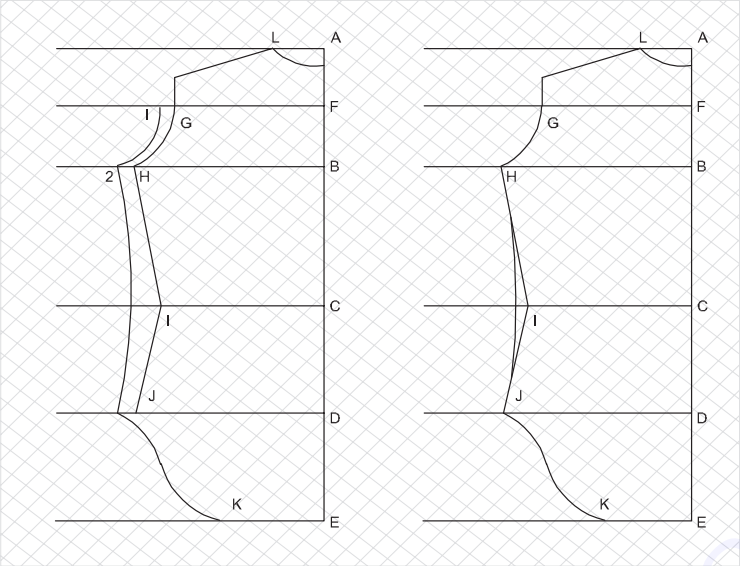

FDC22T0116

Polo shirt Drafting

ack Pattern

- Make a construction line
- A to B – ¾ of an inch downward.
- A to C – 4 to 4 ½ inches downward.
- A to D – ½ armhole circumference plus 1 inch.
- A to E - measure back figure
- A to F – measure shirt length
- Square point B, C. D, E, and F sideward.
- A to G – 3 inches sideward.
- Connect point B and point G with a French curve shaping the neckline.
- A to H – ½ shoulder measurement.
- A to I – ½ chest width measurement or less ½ inch from the shoulder measurements.
- A to J – ¼ of bust circumference measurement.
- H to K – 1 inch downward.
- Connect point G and point K with a straight line.ack Pattern
- Make a construction line
- A to B – ¾ of an inch downward.
- A to C – 4 to 4 ½ inches downward.
- A to D – ½ armhole circumference plus 1 inch.
- A to E - measure back figure
- A to F – measure shirt length
- Square point B, C. D, E, and F sideward.
- A to G – 3 inches sideward.
- Connect point B and point G with a French curve shaping the neckline.

© NIMI NOT TO BE REPUBLISHED

- A to H – ½ shoulder measurement.
- A to I – ½ chest width measurement or less ½ inch from the shoulder measurements.
- A to J – ¼ of bust circumference measurement.
- H to K – 1 inch downward.
- Connect point G and point K with a straight line.
- K to L – 5 inches.
- Connect point K and point L with a straight line.
- D to M – ¼ of bust circumference measurement.
- Connect point L and point M with a French curve.
- F to N – ¼ of hip circumference measurement.
- Connect point M and point N with a straight line. (Fig 1)

Fig 1

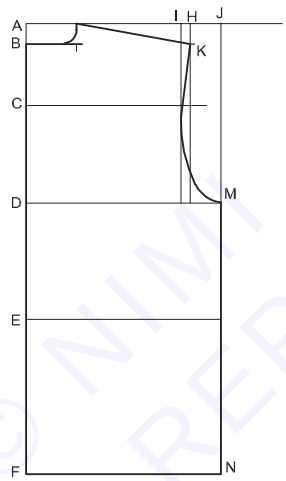

Front Pattern

- A to O-3 inches downward.
- Using the French curve connect point G and point O shaping the neckline.
- F to P-¼ inch downward
- Connect point N and point P with a slight curve.(Fig 2)

Fig 2

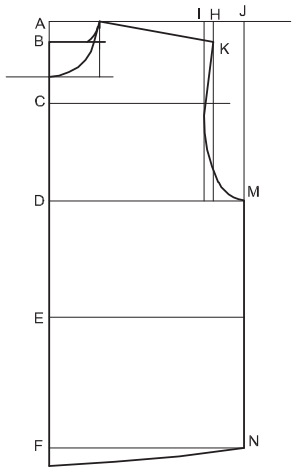

© NIMI NOT TO BE REPUBLISHED

Steps in Drafting an Executive Collar Pattern

Collar Stand

- Make a construction line.
- A to B measure 1 inch downward.
- Square point B sideward.
- A to C-measure ½ back neckline measurement.
- B-D-measure ½ back neckline measurement.
- C-E measure ½ front neckline measurement.
- D-F-measure ½ front neckline measurement.
- E-G-measure ½ inch upward.
- F-H-measure ½ inch upward.
- Connect point D to H and C to G with a slight curve
- G-1-measure ½ inch inward.
- Connect point H and I with a straight line.
- I-J- measure ¼ inch inward.
- Connect J and H.

Collar Fall

- Project point A and point J upward.
- A-K- measure 1 ½ inches upward. Square point K sideward.
- K-L- measure 1½ inches upward.
- Mark the intersection of point K and point J as M.
- M-N- measure 2 inches upward.
- Connect point Land N with a straight line.
- N-0- measure¾ inch.
- M-P-measure ½ inch downward.
- Connect O to P with a straight line.
- Connect K to P with a slight curve. (Fig 3)

Fig 3

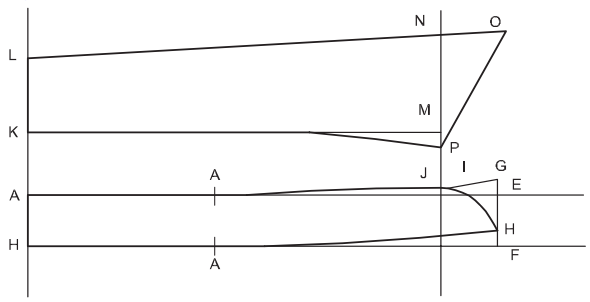

Steps in Drafting a Sleeve Pattern for Polo Shirt

- Make a construction line
- A to B measure 3 ½ inches downward.
- A to C-Sleeve length measurement.

NOT TO BE REPUBLISHED © NIMI

- Square point B and point C sideward.
- B to D 1/2 armhole circumference.
- C to E-1/2 sleeve circumference measurement.
- Connect point A and point D with a straight line.
- Divide line A-D into two equal parts and label it as F.
- Divide line A-F into two and mark it G.
- Divide line F-D into two and mark it H.
- G to 1-1/2 inch upward.
- H to J-1/2 inch downward. Shape armscye by connecting A, I, F, J, and D with a smooth curve line. (Fig 4)

Fig 4

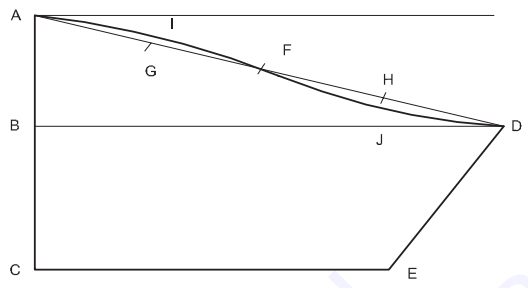

Variations of cuffs and collars

Objectives: At the end of this lesson, you shall be able to:

- about sizes and taking measurement of men's wear
- drafting of Men's Basic Shirt Block with Variations
- variation of cuffs and collars
- drafting of Basic Trouser Block.

Sleeve cuffs

Sleeve cuffs are developed in a variety of widths and styled in a number of ways (curved, pointed, and soon). The most common are the basic shirt cuff; the French cuff; the closed cuff; the roll-up cuff; and the wide, contoured cuff. Other design variations are easily developed using the general instructions as a guide. The grainline can be altered to accommodate lengthwise grain, bias, or cross grain as appropriate for the marker or fabric design

Measurements Needed

Around hand _____, plus 1/2- to 1-inch ease. Cuff width as desired.

Example: 8 1/2-inch (including ease) for a basic cuff 2 inches wide. (Fig 1)

Fig 1

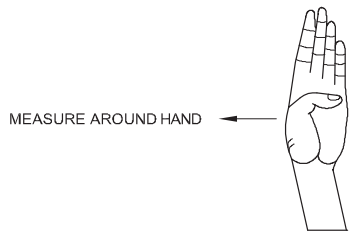

Basic Shirt Cuff

- Fold paper lengthwise.
- Square a 2-inch line from fold. Draw a parallel line 8 1/2 inches long. Mark. • Add 1 inch for extension. (Fig 2)

© NIMI NOT TO BE REPUBLISHED

Fig 2

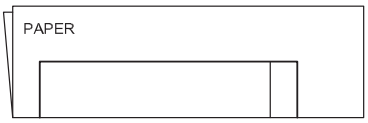

FDC22T0122

- Add 1/2-inch seams.
- Mark button placement in centre of extension.
- Centre buttonhole 3/4 inches from edge (see Chapter 16 on button placement).
- Cut from the paper. (Fig 3)

Fig 3

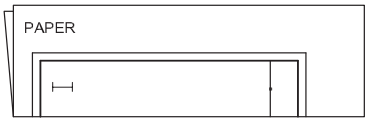

FDC22T0123

- Unfold cuff pattern. Add grainline, straight or crosswise. (Fig 4)

Fig 4

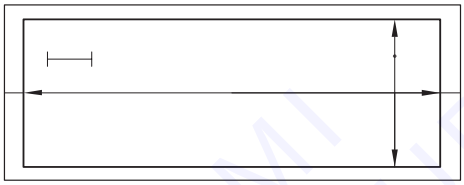

FDC22T0124

Self-Faced Cuff

- Develop cuff using general instructions.
- Cuff can be designed with square corners or curves (broken lines). • Cut four pieces to complete the set. (Fig 5)

Fig 5

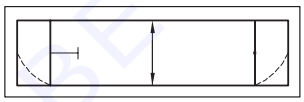

FDC22T0125

French Cuff (Used with Cufflinks) One-Piece Cuff

- Fold paper lengthwise.
- Square a 4-inch line from fold equal to twice the cuff's width.
- Draw parallel line 8 1/2 inches long. Mark for notch and add 1-inch extension to both ends of the cuff. Connect ends.
- Mark for button holes.
- Add seams and grainline.
- Cut from the paper. (Fig 6)

Fig 6

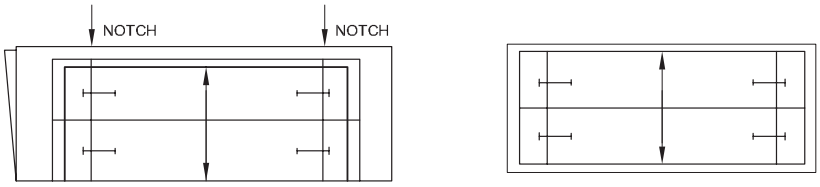

FDC22T0126

Two-Piece Pointed Cuff

- Develop cuff on open paper, using instructions for one-piece French cuff (Fig 5).

© NIMI NOT TO BE REPUBLISHED

- Extend length to the upper ends of the cuff from 1/2 to 1 1/2 inches. (The amount is determined by the style of the garment.) Label X.
- Add seams to all sides of the pattern.
- Draw the grainline.
- Cut from the paper. (Fig 7)

Fig 7

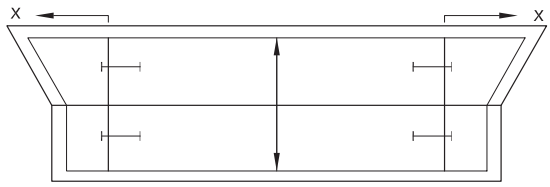

Contoured Cuff

Design Analysis

Contoured sleeve cuffs follow the shape of the arm and can be as wide as desired, ranging from the wrist to the elbow. The designs of the cuff and upper sleeve have the same shape—straight, rounded, pointed, or asymmetric. (Fig 8)

Fig 8

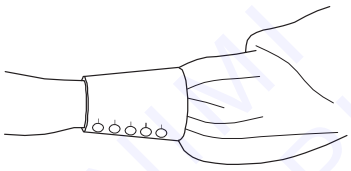

Measurement Needed

Wrist measurement, plus 3/4 inch.

Subtract this measurement from the sleeve entry measurement and record the difference.

Drafting the Cuff

The complete sleeve is illustrated.

- Trace the basic sleeve.
- Draw desired cuff line (shaded area).
- Draw a guideline from the dart point to the back sleeve.
- Divide the recorded difference equally and draw lines parallel to the under seam of the pattern to the cuff line. (Fig 9)

Fig 9

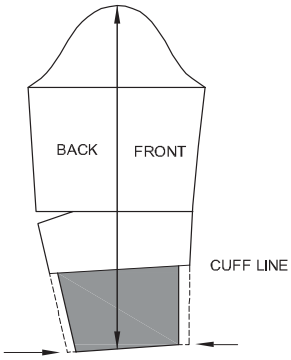

- Cut the cuff from the sleeve, trace, add 3/4-inch extensions (X) on both ends, and add seams. (Fig 10)

© NIMI NOT TO BE REPUBLISHED

Fig 10

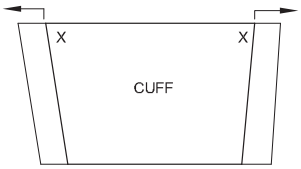

FDC22T0130

- Divide sleeve into quarters, close elbow dart, and draw a straight under seam line. (Fig 11)

Fig 11

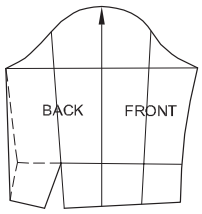

FDC22T0131

- Slash/spread to desired fullness, add length for blousing, and mark centre Y, where X points of the cuff extensions overlap. (Fig 12)

Fig 12

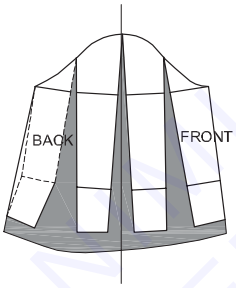

FDC22T0132

Roll-Up Cuff

Design Analysis

Roll-up cuffs are developed all-in-one with the sleeve or as separate cuffs stitched to the sleeve and turned up. To develop this type of cuff, determine the finished length of the sleeve (between biceps level to hem) and add cuff width. Example: Sleeve length below biceps 4 inches; cuff 1 1/2 inches (for rollup). Use these measurements or personal measurements. Use this process for pants with cuffs.

All-in-One Cuff with Sleeve

- Trace sleeve to finished length desired. Label A–B.
- Draw three parallel lines spaced 1 1/2 inches apart below hem (A–B line). Label Sections 1, 2, and 3. (Fig 13)

Fig 13

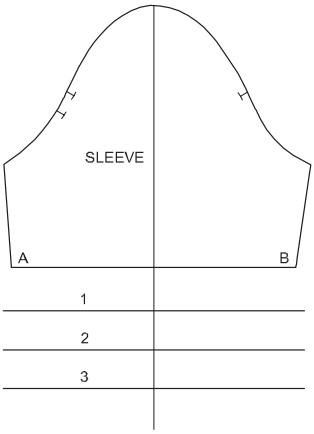

FDC22T0133

© NIMI NOT TO BE REPUBLISHED

- Fold so that Section 1 is up, Section 2 down, and Section 3 underneath.
- Draw the under seam with a ruler on both sides of fold as guides and cut from the paper while folded. Unfold. (Fig 14)

Fig 14

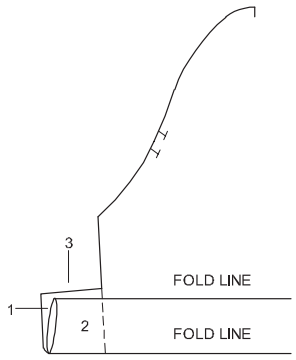

The completed pattern shape for the sleeve. (Fig 15)

Fig 15

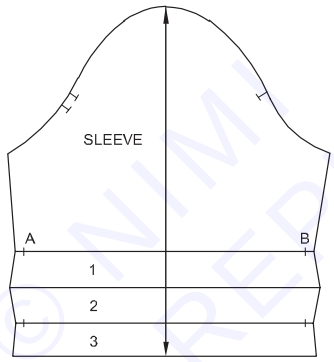

Separated Cuff

Follow the previous instructions for an all-in-one cuff, with the following exceptions:

- Omit third section.
- Cut along A–B line, separating cuff from sleeve.
- Add seams. (Fig 16)

Fig 16

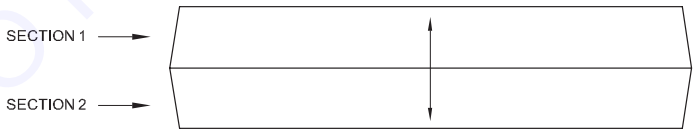

Collars

Basic shirt collar foundation

The basic convertible collar may be worn open or closed. The collar has a 1inch stand at the centre back, and its width varies from 2 1/2 to 3 inches. It can be developed with a seam along the collar edge or folded and cut as either a one-piece or two-piece (centre back seam) collar. The grainline may be straight, crosswise, or bias, depending upon the design effect desired when cut in stripes, checks, or plaids. The basic collar can be a base for other designs (Fig 17).

© NIMI NOT TO BE REPUBLISHED

Fig 17

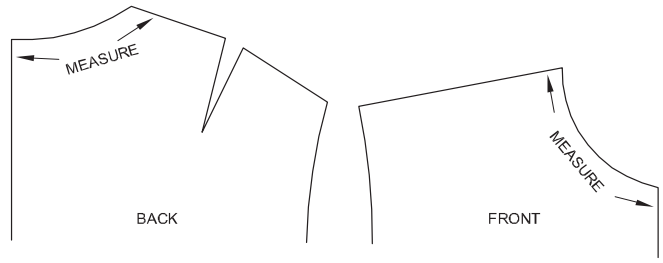

Measurements Needed

Centre back neck: _____

Centre front neck: _____

Total: _____

- Square a line in the centre of the paper. Mark and label the following locations:

  A to B 3 inches (collar width).

  B to C Total neck measurement. Label C.

B to D Centre back to shoulder. Mark for notch. (Fig 18)

Fig 18

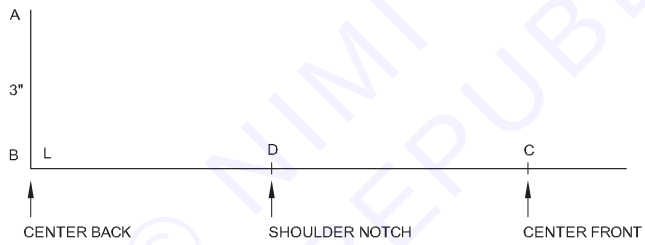

- Square a line up from C.
- Mark E 1/2 inch from C.
- Draw a curved line from E blending with D.
- Square a line from A passing 1 inch or more from guideline C. Label F.
- Draw a line from E to F.
- Draw a grainline and cut the collar from the paper. (Fig 19)

Fig 19

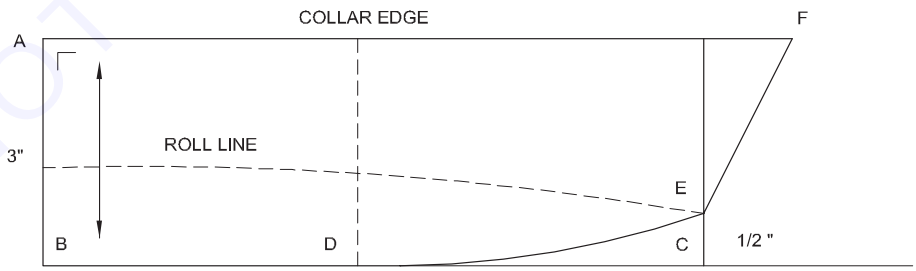

StraightCollar

- Develop a straight collar using instructions given in Figures 1 and 2, except that the neckline edge is straight. The collar's width may be increased to 3 or 4 inches. (Fig 20)

© NIMI NOT TO BE REPUBLISHED

Fig 20

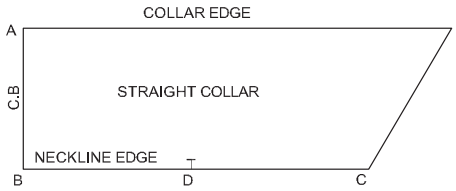

Undercollar

The undercollar pattern is made shorter in width than the upper collar. Two types are given to prevent the undercollar from rolling out beyond the stitch line. The undercollar is drafted from the upper collar. (The broken line in the illustrations indicates the original collar.) The undercollar should be notched 1/4 inch out from each side of the centre back at the neckline edge. The following instructions apply to the development of all undercollars.

- Trace the upper collar.
- Trim 1/8 inch and more for bulky fabrics. Square a short line at the centre back and gradually draw the line to zero at the collar point. (Fig 21)

Fig 21

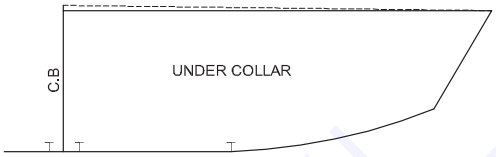

On collars with an uneven style line, trim the excess from the neckline edge of the collar. Follow the same instructions as given in Figure 4.(Fig 22)

Fig 22

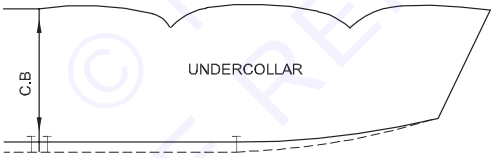

- The collar is illustrated with a centre back seam.
- The grainline can be drawn straight grain, cross- grain, or bias.(Fig 23)

Fig 23

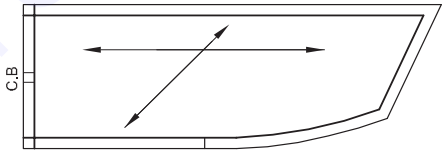

- The collar is cut on the fold. (Fig 24)

Fig 24

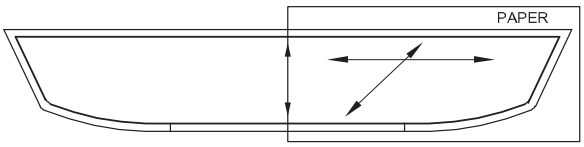

Folded Basic Collar

- Fold paper lengthwise.
- Square a guideline down from fold in the centre of paper.

© NIMI NOT TO BE REPUBLISHED

- Place the collar on paper with centre back on guideline and collar edge along the fold line.
- Trace the collar. Cut out the collar, ending at centre guide line. (Fig 25)

Fig 25

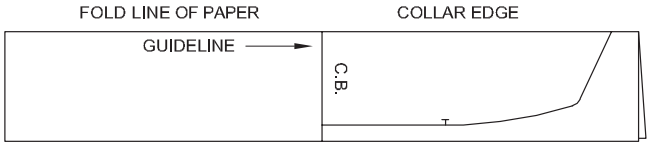

- Unfold the paper. Refold the collar and paper on the guideline.
- Trace the collar. (Completed collar is shown.)
- Cut from paper; notch; draw grainline.(Fig 26)

Fig 26

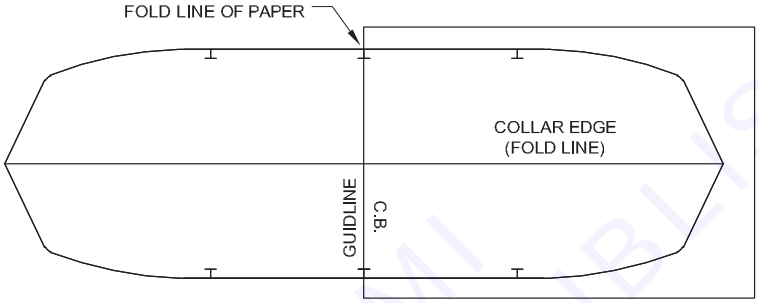

Collar Variations

- Collar designs can vary from the basic collar. Col- lar variations begin and blend approximately in line with the shoulder notch. (Fig 27)

Fig 27

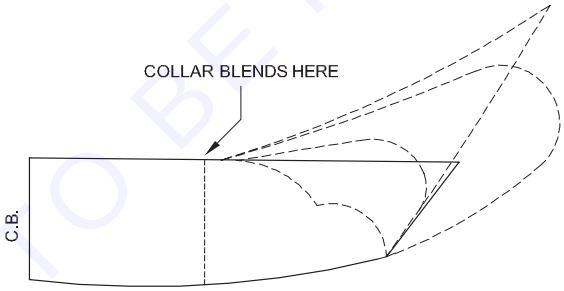

Peter Pan with 1-Inch Stand

(Full-Roll)

Pattern Plot and Manipulation

- Trace the back pattern. Place the front pattern on traced copy, touching the neckline and overlapping the shoulder tips 4 inches.
- Trace the neckline and part of the centre lines.
- A point will appear at shoulder/neck. (Fig 28)

© NIMI NOT TO BE REPUBLISHED

Fig 28

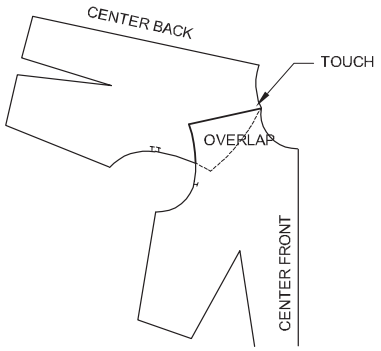

- Extend the centre back neck 1/8 inch. Draw the neckline through the point ending 1/4 inch below centre front.
- Draw style collar parallel with the neckline.
- Cut the collar from the paper.
- Mark a notch at shoulder/neck and where noted.
- Cut from paper and true to the neckline of the garment. Allow an extra 1/16 inch beyond the collar point. (Fig 29)

Fig 29

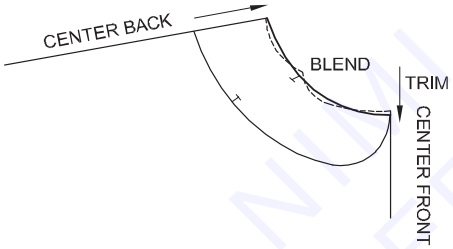

- Trace the collar on fold of the paper.
- Mark centre back notches.
- Cut from paper. (Fig 30)

Fig 30

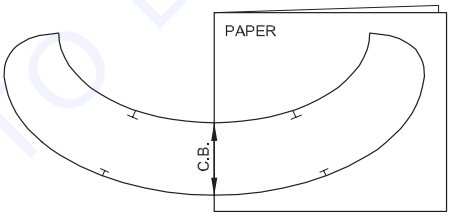

Undercollar

- Trace the collar on the fold. Remove the pattern.
- Trim 1/8 inch (shaded area) as illustrated.
- Mark two notches 1/4 inch apart at centre back on the neckline edge and one notch on collar's edge. (Fig 31)

Fig 31

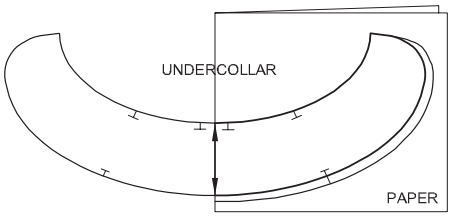

© NIMI NOT TO BE REPUBLISHED

Drafting of Basic Trouser Block With Variations

Objectives: At the end of this lesson, you shall be able to:

- about sizes and taking measurement of men's wear
- drafting of Men's Basic Shirt Block with Variations
- variation of cuffs and collars
- drafting of Basic Trouser Block.

The pant foundation is a loosely fitted pant and is drafted to the natural waist. The pant foundation is the base for the Classic Pleated Trouser and for the draft of the Slack foundation. The CF waist depth is marked in step 3. Trace the pant foundation for creating designs. Read Chapter 26 for greater pant understanding.

Measurements needed: Use personal or chart measurements: Place in the spaces.

A–B Pant length _____.

A–C Crotch depth, plus 3/4" _____.

Tailors refer to depth as the rise.

C–D Hip depth: one-third of C–A. C–E Knee depth: one half of C–B, minus 1 1/2" to 2".

Square out from A, D, C, E, B.

D–F Back hip arc, plus 1/4" _____.

C–G and A–H D–F. Connect G to H.

G–X Half of G–H.

D–J Front hip arc, plus 1/4" _____.

C–K and A–L D–J. Connect K with L.

K–X Half of K–L.

H–M Mark in 3/4" and up 3/4". M–N Back: Waist arc, plus 1" includes 1 dart and 1/4" ease.

L–O Front: Waist arc, plus 1 1/4" includes 2 darts and 1/4" ease.

Mark Dart Legs and Intake. (Fig 1)

Fig 1

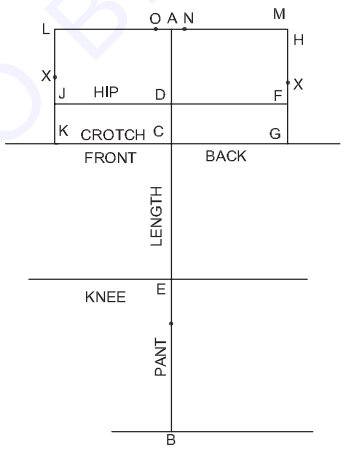

H–P One-half of M–N, plus 1/2". Mark dart intake; square down 3 1/2" from centre.

L–Q One-third of L–O. Mark dart Q, space 1 1/4" and mark second dart. Square down 3" from centres. (Fig 2)

© NIMI NOT TO BE REPUBLISHED

Fig 2

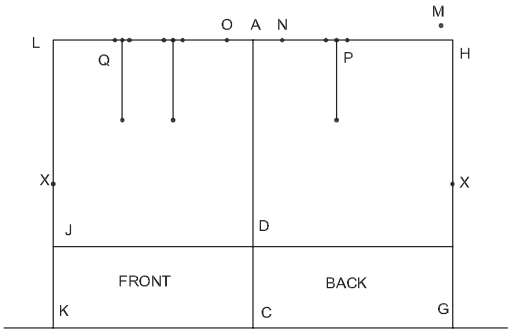

- Mark 1/4” below L, or for personal fit C.F. waist depth. Re-mark L.
- Draw curve waistline from L to O.
- Draw curve waistline from M to N. Completing Dart Legs Draw dart legs to new waistline. Equalize dart legs by extending shorter leg to match longer leg.

G–R One-half of G–C.

K–S One-fourth of K–C.

G–T 1/3” on diagonal line.

Draw curve, blending at X.

K–U 1/3” on diagonal line.

Draw curve, blending at X.

R–V One-half of R–C less 1/8”.

S–W One-half of S–C less 1/8”. (Fig 3)

Fig 3

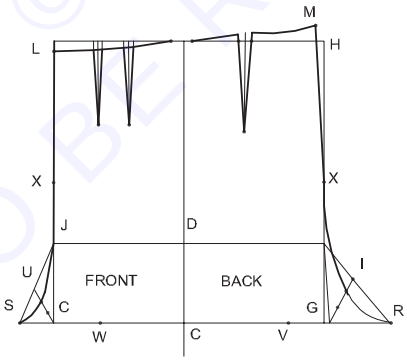

- Square lines from V and W through length of the pant (crease line).
- Back: Draw hip curve from N to D.
- Front: Draw hip curve from O to D.
- Leg line: The back hem is generally 1 inch greater than the front hem. Follow suggested hem measurements. Make adjustments in the fitting.
- Mark 1/2” in from S and R and draw lines to hem marks.
- Inseam: Draw curve line from knee to S and R.
- Out seam: Draw leg lines from each hem mark, blending with D. Mark.
- Make waist band; see Figure 8. This completes the Classic foundation.

Separate trouser and trace for the pleated design patterns. (Fig 4)

© NIMI NOT TO BE REPUBLISHED

Fig 4

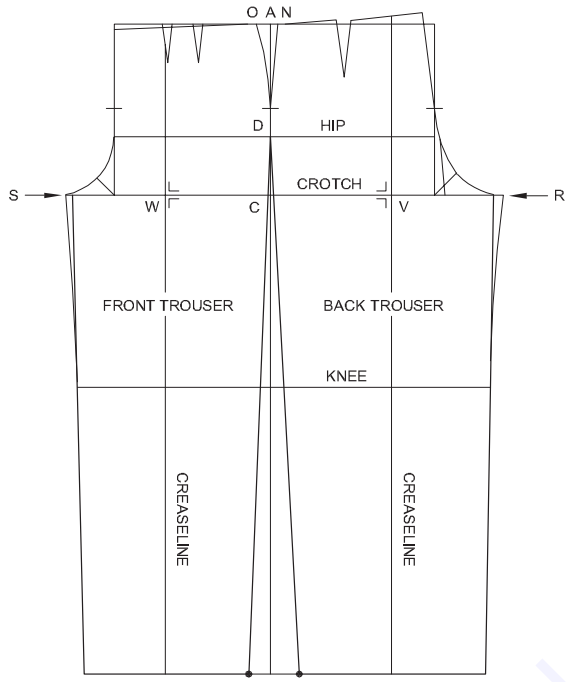

Trouser Draft

- Trace the upper patterns (a).
- Draw side pocket 1 1/4” to past hip. Draw fly and trace (b).
- Draw shield; extend to width of the waist band and out 3” at waist level. Trace two copies: one for lining, trim the other for self- fabric. Use trim tip for belt extension (c). Place interlining on fly, and shield. (Fig 5a, b, c)

Fig 5

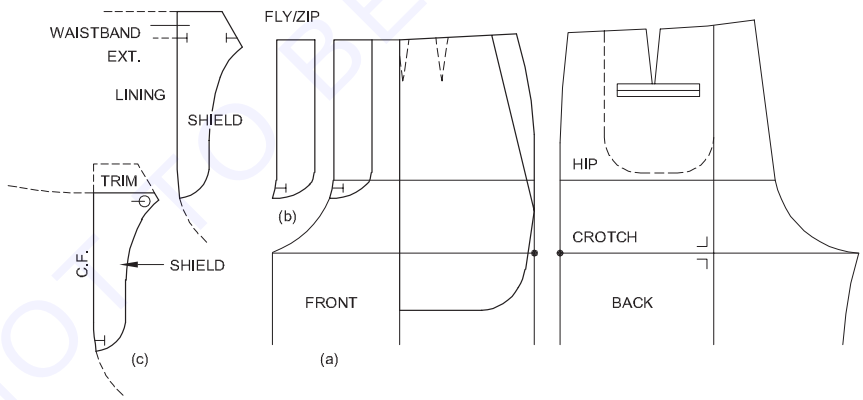

Pockets

- Trace pocket pouch on fold (d) and draw overlay patterns (e, f). Cut in self fabric, and stitch flat to lining.

Welt pocket: Draw welt pocket. (Fig 6 d, e, f)

© NIMI NOT TO BE REPUBLISHED

Fig 6

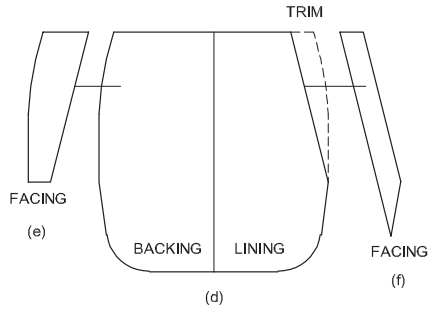

- The first pleat begins on crease line, regardless of location of the dart.
- Slash/spread, or pivot 11/2” from hem.
- Second pleat: Combine waist darts (a).
- Fold first pleat to zero at hem. Fold second pleat to knee and trace/wheel across folds. Unfold, pencil-mark, and blend hemline.

Add seams and 1” for fold-back hem. (Fig 7a, b)

Fig 7

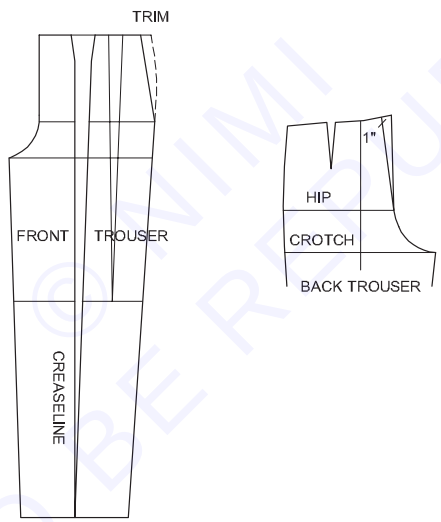

Figure 2, for guide. Trim pocket at entry; see broken lines.

Waist Band

- Length: one-half waist.
- Width: 1 1/2”. X is centre front.
- Right side: Extend 2” from X. Draw point; mark buttonhole.
- Back side: mark for metal hook.

Left side: Shield is 2” from X, following lining shape. Mark metal hook and button place. (Fig 8)

Fig 8

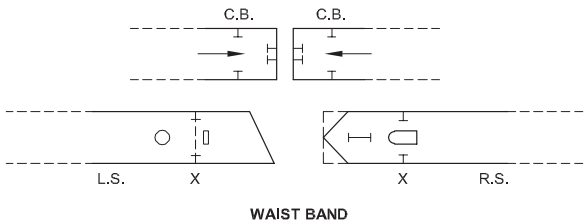

© NIMI NOT TO BE REPUBLISHED

- Back: Add 1” to centre back, allowing for waist modification. Interline waist band. Buckram and curtain can be purchased at tailor supply stores.

1 Slack foundation

Trace the basic pant foundation and modify as illustrated. The slack fits closer than the basic pant foundation by the shortening of back crotch point. It is a flexible pant that can be designed with pleats (includes the relax fitted jean), or without front waist pleats as a casual or dress pant. The pant can be of any length, the hemline may be narrower or wider than the suggested measurements for style variations. Side pockets of any style can be drafted for the foundation.

The waist band can be folded or cut in two parts. Test fit the foundation before designing from the pattern.

Front

- Measure 1/2” in at centre front and up 1/4”.
- Draw line to hip level and a curved line ending 1/4” up from crotch point.
- Mark 1/2” at side waist, and blend to hip. Trim excess.
- Use hem measurements and draw lines from hem to knee and a curved line to crotch point.
- Draw fly and trace. Draw shield on fold (a).

Back

- Reduce inseam 3/4”.
- Raise crotch level 1/4”.
- Mark back welt and far pocket.
- Shift crease line 3/8”. Draw new crease line through length of the pattern.
- Draw crotch curve to blend with hip.
- Mark hem measurements and draw lines from hem to knee.

Add a curved line to crotch point (b).

Add seams and 1 inch fold-back hem. Cut for test fit. Walk seams.

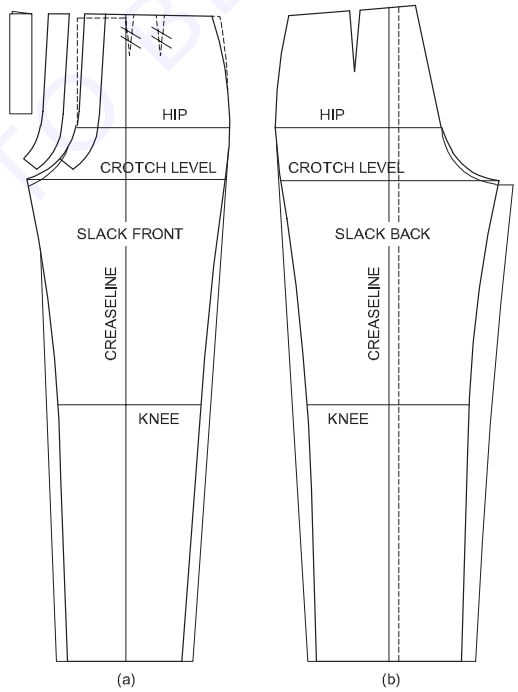

NOT TO BE REPUBLISHED © NIMI

2 Pleated Trouser

The pleated trouser can also be drafted from the slack pant for a closer fit. The pant design is for sizes 4 to 6X and 7 to 14 for boys and girls. More than one pleat can be created by spreading more than one place on the draft. The pant can also be cuffed.

Design Analysis The pant is plotted for slash placement (one pleat is illustrated, but by placing more slash lines, more pleats can be added to the pant draft). The fly front can be placed on either side of the front pant. The back pant is basic.

Pleated Trouser Draft

- Trace the front and back trouser pant. • Slash at grainline of the pant and spread 1 1/2 to 2 inches for pleat intake.
- For the fly front, add 3/4 to 1 inch to pant front (the length of the fly should be at least 1 inch longer than the zipper).

Waist Band Options

Decide the type of waist band best suited to the design.

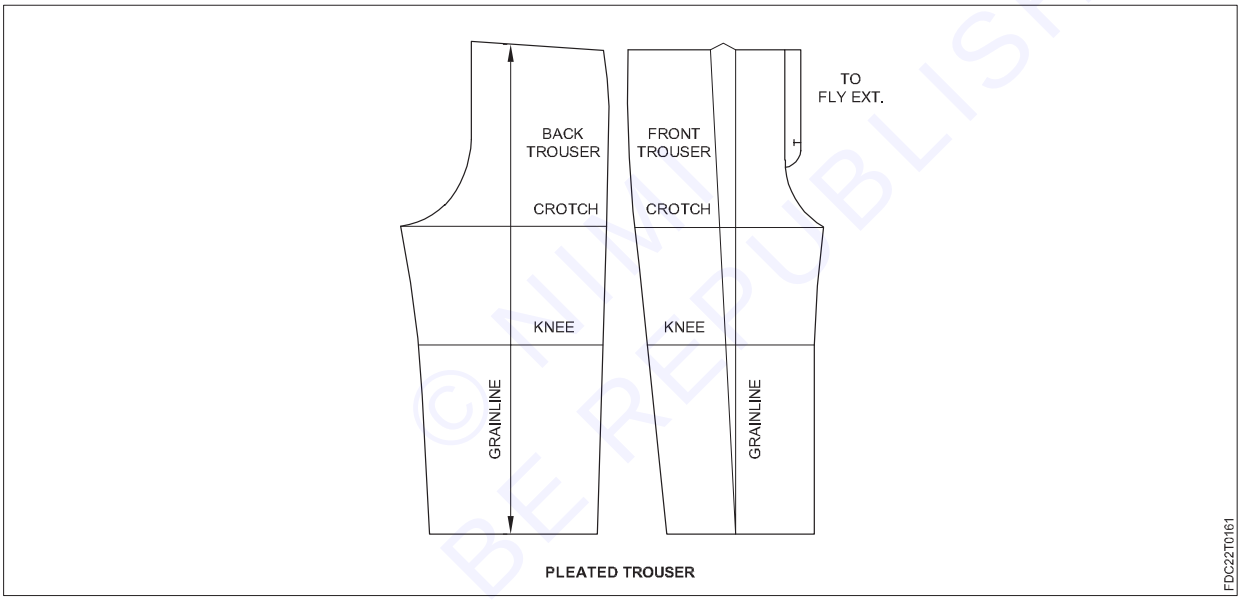

PLEATED TROUSER

3 Baggy Pant

The trouser pant is the base for pants that are very full through the leg line. The draft is suitable for sizes 3 to 6X and 7 to 14, for boys or girls.

Design Analysis

This is a fun pants, to be made as full as desired and cut to any length. Fullness is added through the sides of the pattern. Design 1

The pants is gathered at the waist and the hemline of the pant and is secured with elastic or may be sewn to a band at waist and ankle. Design 2 is a thought problem.

Baggy Draft

- Trace front and back trouser, spacing the patterns to the amount of fullness desired.
- Extend the inch is used for lapping and stitching together.
- Cut 1/2-inch elastic equal to foot entry measurement plus 1 inch. One inch is used for lapping and stitching together.
- Lower the crotch (it may be lower for a more waistline 2 3/4 inches for 1inch elastic.
- Cut 1-inch elastic equal to the waist measurement. One exaggerated look).
- Extend the pant length for blousing.

© NIMI NOT TO BE REPUBLISHED

- Taper the leg line to control fullness.

Complete the pattern for a test fit.

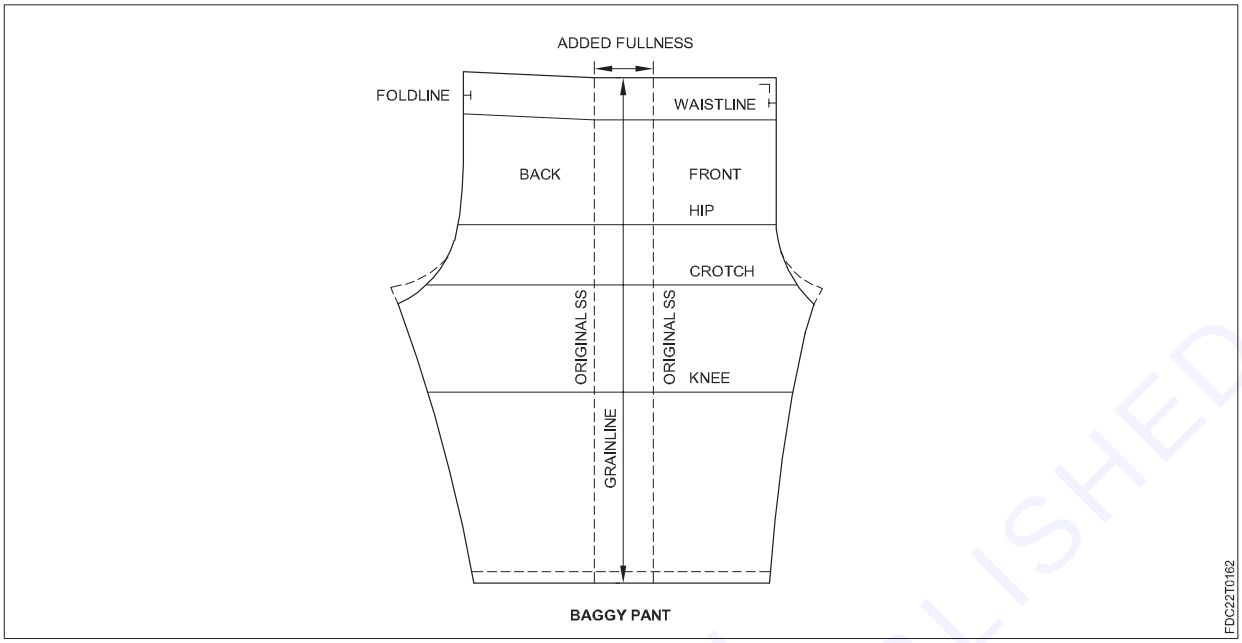

BAGGY PANT

4 Western Jean

The standard jean pant is based on the jean foundation. The design is for 3 to 6X and 7 to 14, for boys and girls. The fly front for girls may be on either side.

Design Analysis The traditional western jean pant can be developed with a tapered leg line or designed as a boot pant. Determine the type of waistline best suited to the design. See Waist Options section earlier in this chapter.

- Trace front and back jean patterns.

Plot the patterns, as illustrated.

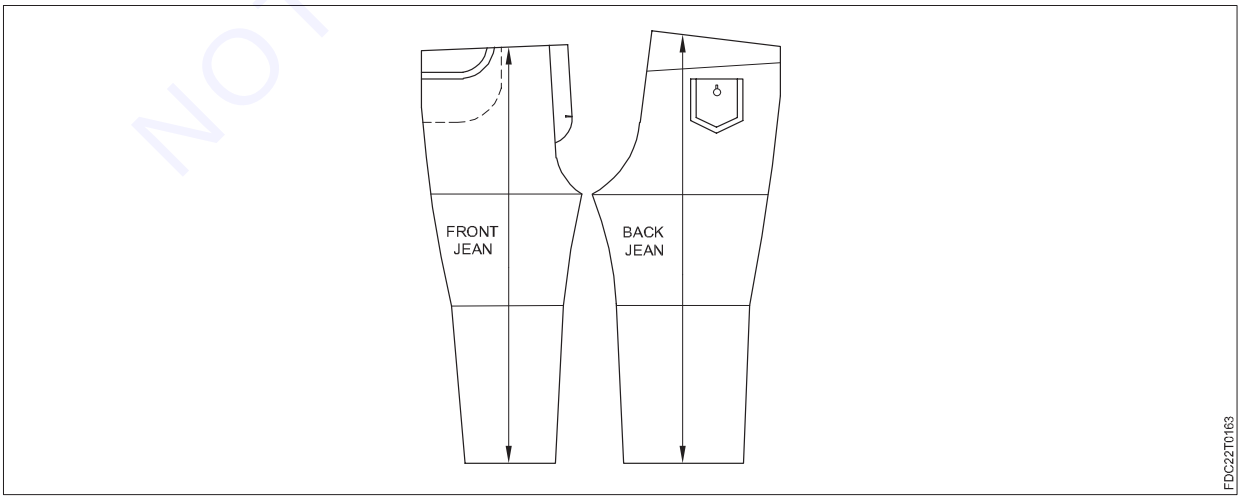

© NIMI NOT TO BE REPUBLISHED

- Place paper under the pocket section of the draft and trace pocket backing and facing.

Trim the pocket style line from the pattern.

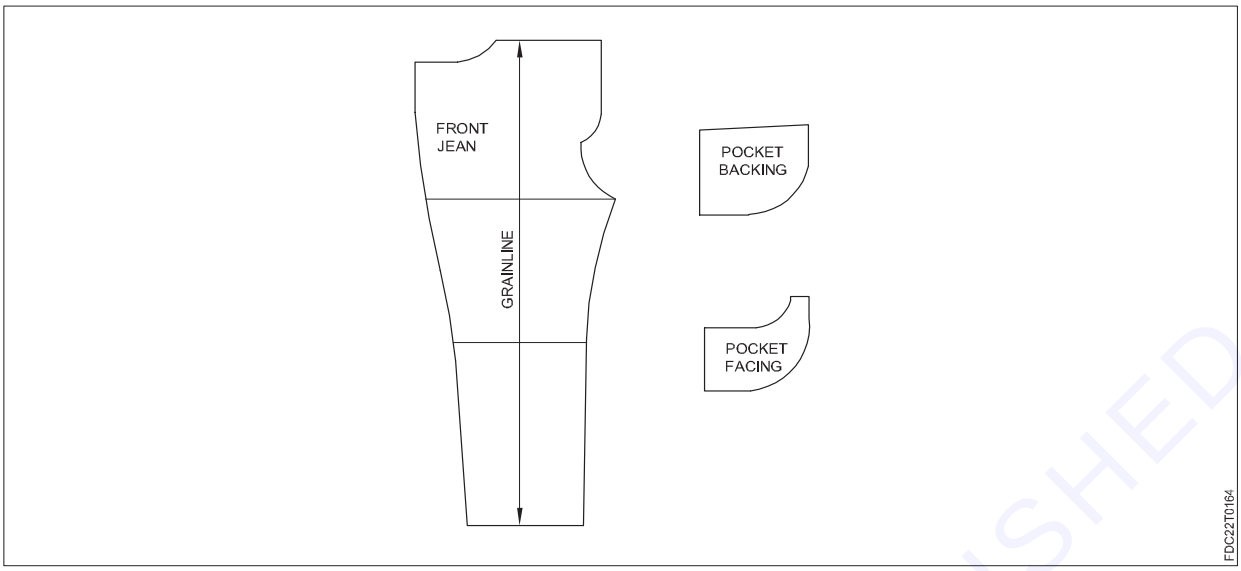

- Place paper under yoke part of the draft and trace back yoke.
- Trace back pocket from the pattern.

Back pant.

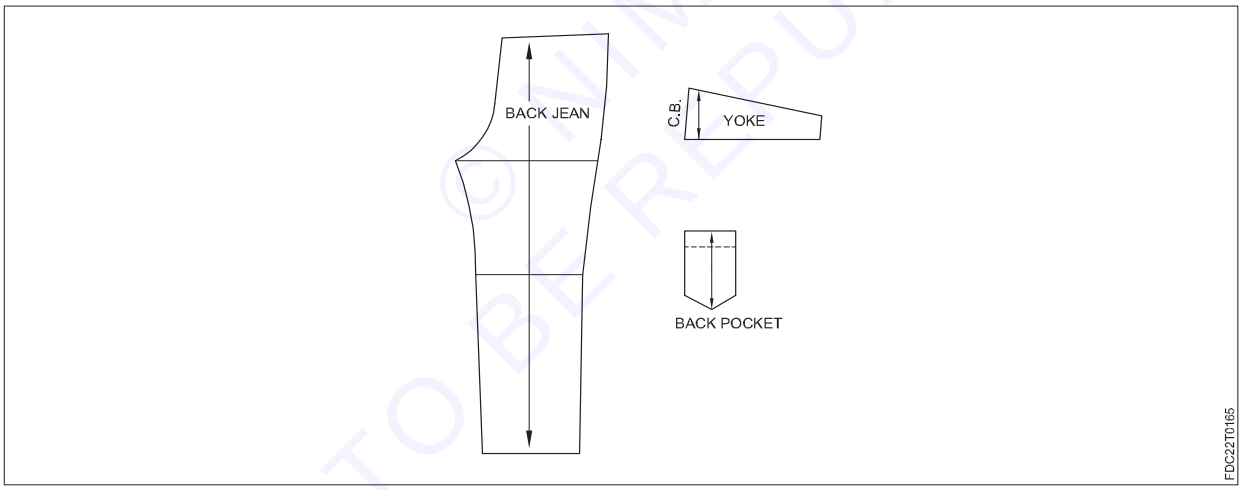

Waist band is illustrated. Cut on fold or cut two pieces. If back elastic is required, add 1 inch to centre back (See Partial Waistband and Elastic section, earlier in this chapter).

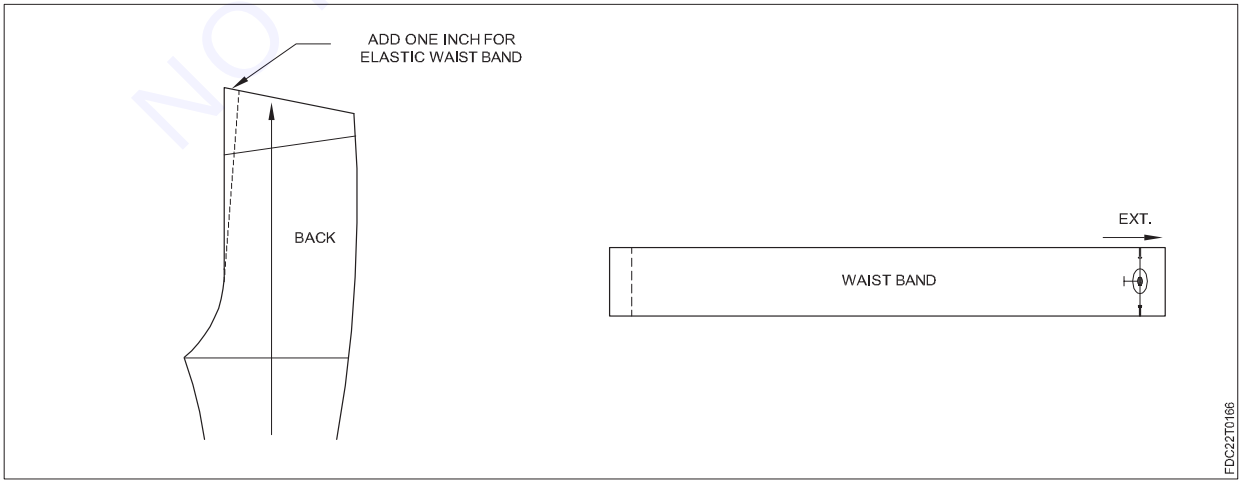

© NIMI NOT TO BE REPUBLISHED

5 Bell-Bottom Pants

The bell-bottom pant is based on the jean foundation pattern for sizes 3 to 6X and 7 to 14, for boys and girls.

Design Analysis

Flared leg lines distinguish this pant style. The flared leg can be as wide as desired and can start from any point along the leg line. The stylized opening has buttons and buttonholes for control. Determine the type of waistline best suited to the design. See Waist Options section earlier in this chapter.

Flared Leg line

- Use illustration as a guide to develop the flared pant.

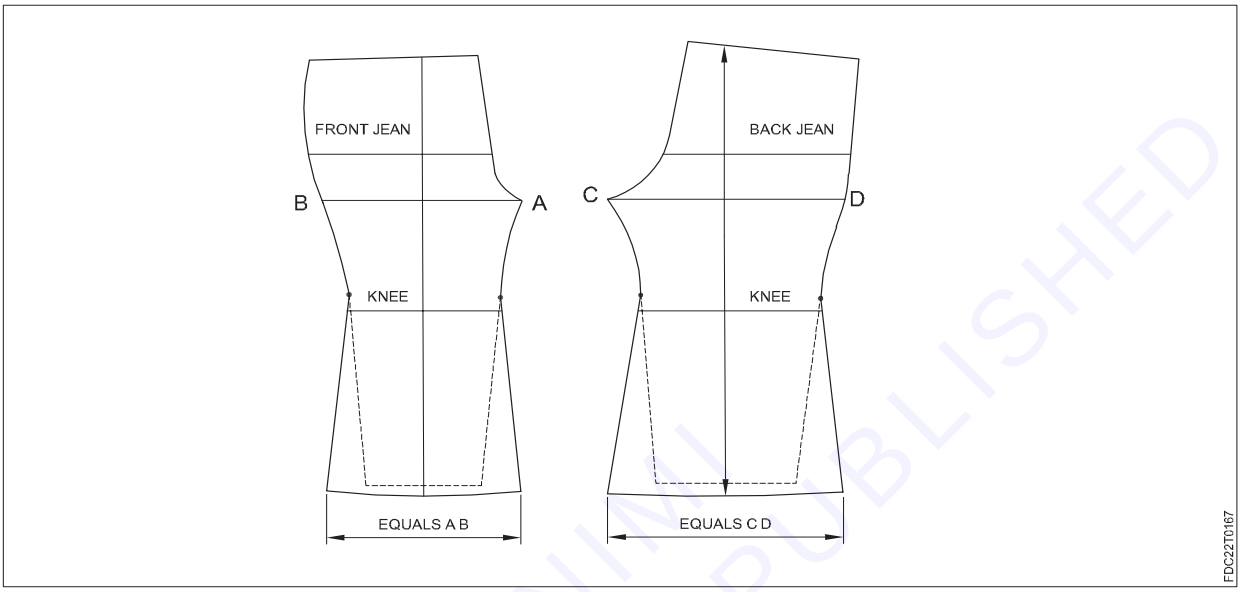

Uneven Flared Leg line

Use illustration as a guide to develop the uneven flared hemline.

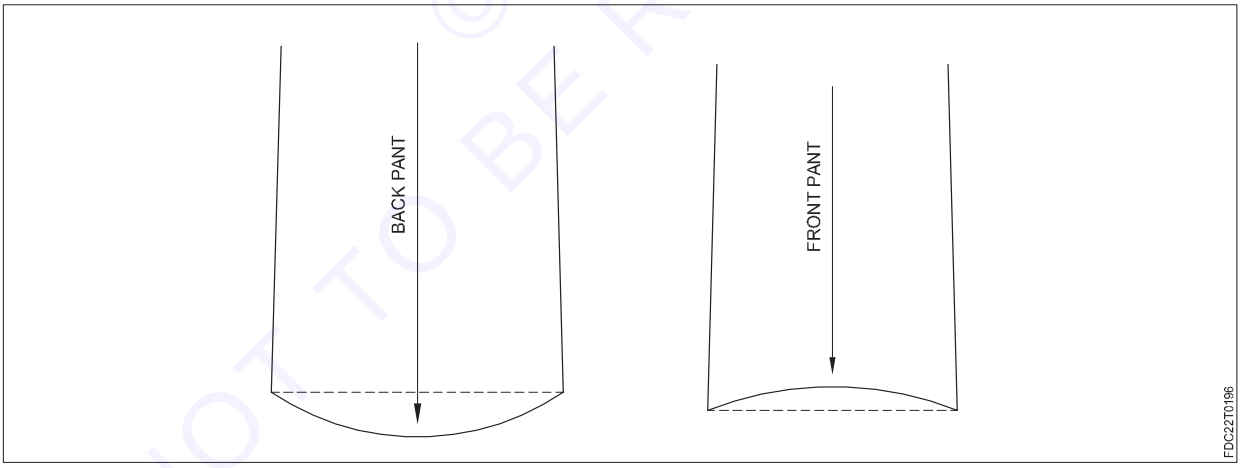

- Use illustration, design, size, and height of the model as guides in plotting the pattern.

Suggestion: Trace two copies of the flared leg pant, extending the centre lines for the overlap on one copy. Save the original pant for other designs.

© NIMI NOT TO BE REPUBLISHED

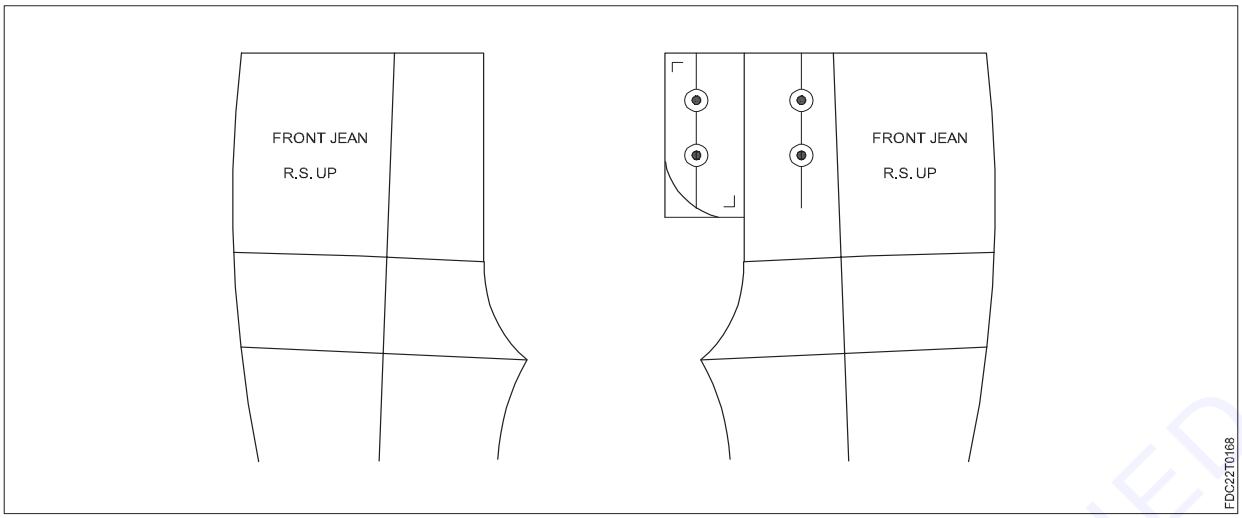

- If a waist band is used, add an extension for the overlap.

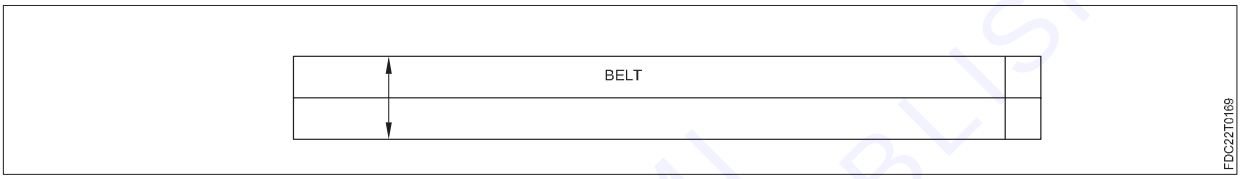

© NIMI NOT TO BE REPUBLISHED

Introduction Cutting technology

At the end of this lesson, you shall be able to:

- introduction of cutting technology
- requirement of cutting
- processes involved in cutting room
- types of cutting machines.

Introduction

Cutting is a pre-production process used to separate fabric parts as replicas that are of precise size and shape as the pattern of pattern pieces in a marker plan.

Requirment Of Cutting

- Precision of cut- to ensure the cutting of fabric aquirly according to the line drown of the marker plan.
- Clean edge –By avoiding the fraing out of yarn from the fabric edge. Cutting edge must be smooth clean. Knife must be sharp for smooth or clean edge.
- Consistency in cutting – all the sizing safe of the cutting parts should be same of knife should be operated of the right angle of the fabric lay.

Processes Involved In Cutting Room

- Planning and, if appropriate ,drawing and reproduction of the maker
- Spreading of fabric to form a lay
- Cutting of fabric
- Preparation of cut work for the sewing room

Types of cutting machine

1 **Manual cutting machine**

These are used for cutting one or two piles and are often used in the sample room.The lower blade of the shears passes under the piles, but the subsequent distortion of the fabric is only temporary and accurate cutting to the line can be achieved with practice.

Advantage

Almost every type of cloth are cut by scissors. Scissors are mainly used for cutting single ply fabric.

Disadvantage: it takes huge time for fabric cutting .it is impossible to cut the fabric lay of any height

2 **Semi- automatic (straight knife)**

Knife is driven by electric power. Blade edge: straight edge ,wave edge, saw edge ,serrated edge, mostly straight edge is used .It can cut heavy fabric such as canvas & denim.

Advantages

Comparatively cheap & transferred easily from one place to another. Higher lay of fabric can be cut easily. Round corner can be cut more precisely then even round knife , Production speed is very good & fabric can be cut from any angle.

Disadvantages

Some time deflection may occur due to the weight of motor. Knife deflection is high in risk, when lay height is too high in risk, when lay height is too high. Sometime accident may happen.

Band Knife

- Band knife comprises a series of three or more pulleys, powered by electric motor
- Cutting knife is shapeless in shape & flexible.
- Blade is usually narrower then on a straight knife.
- Machine is stationary but fabric is moveable.

NOT TO BE REPUBLISHED © NIMI

Advantage

Used when higher standard of cutting accuracy is required very sharp corners & small parts such as collars and cuffs, used more in men's wear.

Disadvantages

Work load is high as machine is stationary and fabric is moveable . not suitable for cutting large amount of garment part.

Round Knife

- Elements-base plate , electric motor ,handle for directing the blade and rotating circular blade.
- Blade diameter varies from 6-20cm.
- Blade is circular.
- Blade is driven by electric power.
- Circular knife is driven by 1000-3500cm.

Advantages

Suitable for single as well as multiple layers around 20 to 30 and easy to operate.

Disadvantages

Difficult to cut small components and not suitable for cutting very curvy lines in higher no. of layers

Die Cutting Machine

- Two types- presses and clickers
- Main parts of machine are blade , arm head , die motor & operating system of arm.
- Die is made by metallic strip.
- Most useful to cut sharp and small components

Advantages

- Used to cut sharp corners of small parts of dress accurately.
- Most useful to cut any shape or any angle.
- Comparatively less time required.
- Best method of cutting knitted fabric.

Disadvantages

- Fabric loss is high due to the need of the fabric lay.
- High labour cost.
- Two change the style quickly is impossible.
- Difficult to cut large component.

Notcher cutting machine

- Special type of cutting machine, used in special case.
- Used to cut notch in the edge of some components.
- The invention of notcher machine was done to make notch, Notch can be made in U or V shaped.

Advantages

- Special type of cutting machine and used in special case.
- Useful to cut small notch.

Disadvantages

- Only used to make notch.

© NIMI NOT TO BE REPUBLISHED

- Thermoplastic fiber can not cut by this machine
- Use of the machine is limited.

Drill Cutting

- Needed to mark on the components specially for pocket and dart setting
- For tightly woven fabric, making of hole by drill is permanent for long
- In hypodermic drill some color is sprayed along the hole so that it can ease to find the marked place.

Advantages

- Need to mark on the components
- Make the hole permanently for long time

Disadvantages

- Only used for making the hole in the fabric
- For loose woven fabric it cannot make the hole permanently for long time

Computer controlled knife

- This method provide the most accurate possible cutting at high speed.
- Marker is not necessary to put over the fabric lays during cutting.
- Cutting knife is oval shaped & very hard.
- Sharpness is also high & blade is made of stainless steel.
- Cutting knife itself moves according to the
- direction of computer memory.
- This machine is CAM system

Advantages

- Very fast cutting operation
- Very active cutting by computer controlled system.
- Suitable for very large production and less labour cost
- Speed can be controlled and Intensity of accident is low.
- No need of marker and Fabric can be cut 6-8 times than manual methods:
- Very expensive.

Disadvantages

- Higher maintenance cost.
- Skilled manpower is required.
- If correct disc not loaded error will be indicated

Laser Cutting Machine

- Fabric is cut try a ray of light in a very fine spot using a laser
- Radius of spot of light is a 25 mm & high powerful
- When the ray falls on a material, it generates heat on the material and cutting is done by vaporization
- Fabric is cut at speed of 13m per minute
- Cutting head is controlled by computer

Advantages

- Very fast cutting operation.
- Can be cut in a proper line as the cutting head is controlled by computer

© NIMI NOT TO BE REPUBLISHED

Disadvantages

- Table for higher depth of lay office
- Cutting edge of fabric in wetted by water
- Sometimes water spot should be seen in the fiber
- Neel of filtering & detonation of water
- Need of controlling the sound of jet

Plasma Cutting Machine

- This system, fabric are cat by a thin through a which is made by Argon gas
- One or mare fabric piles can be cut
- Fabrics are cut by placing in a table, the surface (4) of which must be placed in a perforated blanked place
- Most useful for cutting single ply of fabric

Advantages

- Automatic torch height control system.
- Automatic dry-fuel gas control system
- Automatic torch explosion system.
- Pneumatic band damping

Disadvantages

- Synthetic fiber not cut.
- Higher number of fabric is not cut.
- Need higher will operator
- Costly

Water Jet cutting Machine

- This system, thin jet of water it passes through a nozzle in a very momentum
- Pressure of water is 60,000 pounds per square inch,
- Water in worked as like as hard & sharp knife which can easily cut the fabric
- A catcher in the bottom of fabric jays & it used with the same speed & it used with the same speed & same direction of water jet.

Advantages

- High cutting speed.
- There is no need of knife to cut fabric so that no need of sharpening operations
- Better to cut hard materials.

Disadvantages

- Not suitable for higher depth of lay of fabric
- Cutting edge of fabric is wetted by water.
- Need of filtering & deionization of water
- Need of controlling the sound of jet.

© NIMI NOT TO BE REPUBLISHED

Introduction to Fusing technology

At the end of this lesson, you shall be able to

- processing factors that control Fusing equipment
- methods of fusing
- defect during fusing process.

Introduction to fusing technology

Fusing is a an alternative process for joining fabric that is widely used for adding interlining consists of a base fabric, which may be similar to the fabric used for sew-in interlining, But has a thermoplastic resin in the form of dots on its surface ,which melt when heated at a specific temperature and pressure .

Not all apparel fabrics can be fused and there may always be some situations where sew-in- interlining continues to be used ,But now a days, fusing is the most common process, due to technical and economic aspects.

Fusible Interlining

Fusible Interlining:- A base fabric coated on one side with a thermoplastic adhesive resin which can be bonded to another fabric by the controlled application of heat and pressure.

Processing factors that control fusing :

Fusing is controlled by four processing components.

- Temperature
- Time
- Pressure
- Cooling

Fusing equipment

1 Electric Iron

2 Flat bed press

3 Conveyer fusing press

Methods of fusing

Fusing is done by following methods

1 Reverse fusing

- In this method, the outer fabric lies on top of the fusible.
- On flat bed presses with elements only in the top layer , it is necessary to adjust temperature setting .

2 Sandwich fusing

- This is effectively carried out on horizontal continuous fusing press where heat is applied from both sides above and below.
- Two pairs of components forming two laminates are fused together with the two outer fabrics on the outside of the sandwich and the interlinings on the inside.

3 Double fusing

- This is the fusing of two sorts of interlining to the outer fabric in a single operation.
- It is most commonly used in shirts collar and Men's jackets front.

Defect during fusing process

There are mainly two types of defects which may occur during fusing.

1 Striking back

When two parts of fabrics are joined by pressure and heat during fusing it must have the control to the temp.& pressure. Sometimes the pressure and heat are not controlled properly during fusing so that the resin is passed through lower part of the fabric. This is called striking back.

© NIMI NOT TO BE REPUBLISHED

2 Striking through

When two parts of fabrics are joined by pressure and heat during fusing it must have the control to the temp.& pressure. Sometimes the pressure and heat are not controlled properly during fusing so that the resin is passed through the upper part of fabric. It is called striking through.

Introduction to Sewing technology

At the end of this lesson, you shall be able to

- classification of sewing machines
- sewing machine needles
- sewing thread and selection criteria
- stitch and Seams and their classification.

Introduction to sewing

Sewing is the process of fastening or attaching two parts of fabric using stitches made with a needle and thread. It is one of the basic steps of apparel manufacturing process. Sewing section is the most important department of a garment manufacturing industry

Classification Of Sewing Machine

1 Basic sewing machines comprise machines that sew with a lock stitch and multi-thread chain stitch. These are mainly intended for attaching garment components for basic sewing operations.

2 Special sewing machines: which are used for a specific function such as pocket piping, button attach ,button hole etc. and based on stitch type such as blind stitch, zigzag stitch, bar tack etc.

Basic sewing machine that are used in garment industry

1 Single Needle Lock Stitch Machine (SNLS)

2 Over Lock (All Type)

3 Flat Lock Machine

4 Feed Of The Arm Machine

5 Bartack Machine

6 Button Stitch Machine

7 Button Hole Machine

Single Needle Lock Stitch Machine (SNLS)

- This machine makes lock stitches. This is a widely used sewing machine.
- Purpose: Single needle lock stitch machines are used for joining two or multiple fabric plies together. Machine is used to sew light weight, medium weight and heavy materials. (Fig 1)

Fig 1

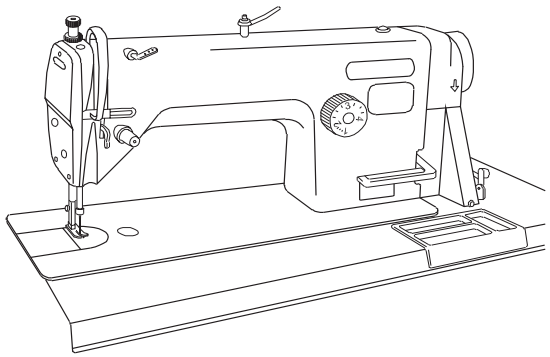

FDC22T0170

© NIMI NOT TO BE REPUBLISHED

Over lock Sewing Machine:

- An overlock stitch sews over the edge of one or two pieces of cloth for edging, hemming or seaming. Usually an overlock sewing machine will cut and sew at the edge of the cloth
- Over lock machines are available in 3 threads, 4 threads, and 5 threads over edge sewing.
- Purpose: This machine is used for serging garment panels (example: trouser panels serging) and for over edge stitch. These types of machine are mostly used in knitted garment sewing for over edge stitch. Like side seam. (Fig 2)

Fig 2

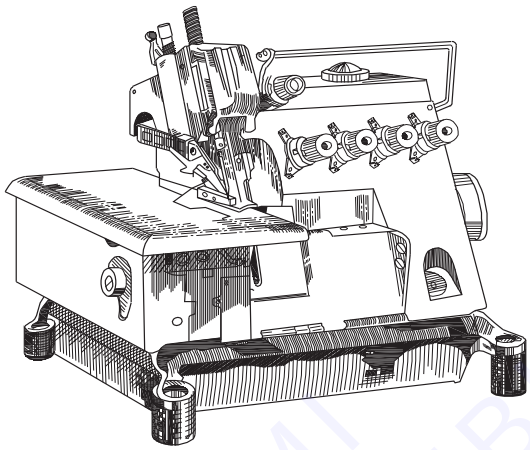

FDC22T0171

Flat lock sewing machine:

- This machine is called as cover-stitch sewing machine. Flat lock sewing machines normally come with 2-3 needles.
- Flat lock machines are available in two types – Flat bed and Cylinder bed.
- Usage of these machines: Flat lock machines are used for hemming sleeve and bottom of the knits products. For cover stitch can be used in any part of the garment for decorative purpose.(Fig 3)

Fig 3

Feed of the Arm Machine

- This machine is used in making flat and felt seam. Two needle threads form the chain stitch.
- For example, this machine is used for sewing shirt side seams and under arms, and for sewing jeans inseam and out seam.

Bartack machine:

- Bartack stitch is made to reinforce the seam and garment component. Like in belt loop joining and at the bottom of side pocket opening bar taking is done.This machine is used for giving secure stitches.(Fig 4)

NOT TO BE REPUBLISHED © NIMI

Fig 4

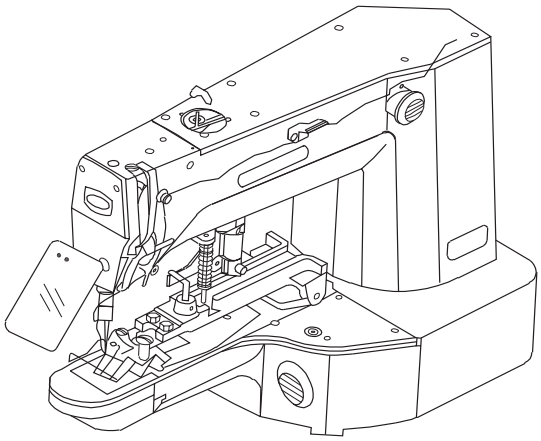

FDC22T0172

Button Stitch Machine

- A special machine used only for stitching button in a garment. Different sizes of button can be attached in same the machine by changing the setting.
- Purpose: Attach button. Machine stitches button and trim thread automatically.(Fig 5)

Fig 5

Button Hole Machine:

This machine is used for making the button holes on garments. Button holes can be made with different stitch density. Like in Shirts, Trousers, and Polo Shirts etc.

Sewing Machine Classification Based on Its Bed Type

Bed is the part of a sewing machine on which the fabric rests while it is being sewed.Bed shape and type is different for different type of operations and requirements.

Flat Bed

- Most common and basic type.
- The large working area allows a wide range of sewing application; the material can easily be guided around the needle and the presser foot.
- This basic type garments sewing machine used for all kinds of flat sewing operation.

© NIMI NOT TO BE REPUBLISHED

Cylinder Bed

This type of sewing machine has an increased working height and a bed in the shape of a horizontal arm. It is especially suitable for sewing on tubular parts, such as cuffs, sleeves, and trouser legs, and also for button sewing and bar tacking. This sewing machine is used extensively in the making of clothing for knitted fabrics.

Post Bed

- It has a raised working machine bed and is used for stitching of three-dimensional products such as shoes and bags.
- It is used for joining of small and curved parts of a garment.
- It has special application in sewing of shoes, bags, umbrellas, boots etc.

The Feed-off-the Arm

- The feed-off-the arm machine is used where a lapped seam has to be closed in such a way that the garment part becomes a tube.(Fig 6)

Fig 6

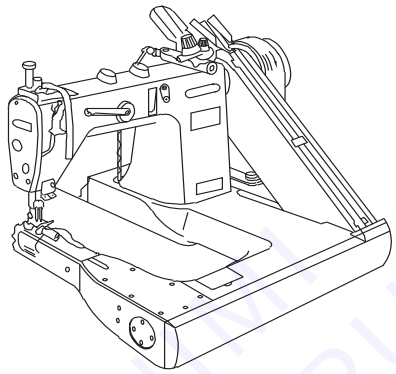

FDC22T0173

- They are common in jeans production where the outside leg seam is normally the type known as lap-felled and it is joined after the inside leg seam in the sequence of construction.

Raised Bed Sewing Machine

- Raised Bed Machines is a machine where the entire machine is mounted on the top of the table. It is the basic form for various specialized garments sewing machines such as buttonhole machines.

SEWING MACHINE NEEDLES

Function:

- To produce a hole in the material for the thread to pass through and to do so without causing any damage to the material.
- To carry the sewing thread through the fabric and form a loop which can be picked up by the hook on the bobbin case or looper. (Fig 7)

Fig 7

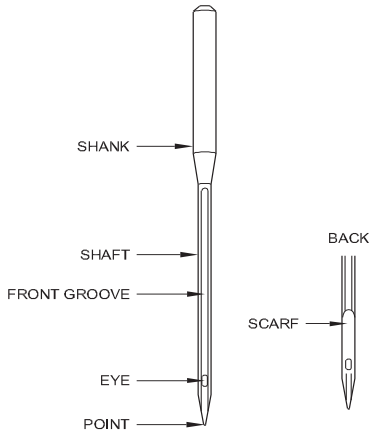

SEWING MACHINE NEEDLE

FDC22T0174

NOT TO BE REPUBLISHED © NIMI

Selection of sewing needle

Needle selection depends upon various factors such as:

- characteristics of the fabric
- Thread
- Seam type
- Stitch type

Needle point - The needle point is determined by the fabric weight and its structure.

Round points Needles: These have a conical shape designed to spread the yarns without breaking them; they are used for most woven fabric

Ballpoint needles – These have a rounded point and are generally used for knits and stretch fabric.

Sewing thread and its selection criteria

The seam performance of the garment is greatly influenced by type of sewing thread and seam & stitch used.

Sewing thread

Sewing thread are special kinds of yarns. They are engineered and designed to pass through a sewing machine rapidly. It is quite essential for a sewing thread to function efficiently in a sewn products without breaking or becoming distorted during the use of garment.

STITCHES AND SEAMS

1 Seam is the combination of stitch which makes line to join two ply of fabric.

2 In apparel manufacturing seams are formed when two or more pieces of fabric are joined by stitches. Seam is used for both functional and decorative purpose.

3 Seams have three dimensions: length, width & depth.

- **Seam length:** It is the total distance covered by a continuous series of stitches. (e.g. shoulder seam)
- **Seam width:** It is width of a seam allowance Measured from the cut edge of fabric to the main line of stitches.
- **Seam depth:** It is the thickness or flatness of a seam, which are major factors in appearance and comfort of a garment.

Factors affecting selection of Seam Type

1 Garment design, type, quality, end use, and care.

2 Fabric type, bulk, texture, weight transparency, and tendency to fray.

3 Desired strength and durability.

4 Difficulty of construction and skill of the operators.

5 Equipment available e.g. sewing machine.

6 Designer or manufacturer preference.

7 Current fashion trends

CLASSIFICATION OF SEAM

Seams are divided into eight classes:.

Class 1 - Superimposed seam

Class 2 -Lapped seam

Class 3 -Bound seam

Class 4 -Channel seam or flat seam

Class 5-Ornamental seam

Class 6 -Edge neatening

© NIMI NOT TO BE REPUBLISHED

Class 7- Applied seam

Class 8- Enclosed seam

STITCHES

A Stitch is the configuration of the interlacing of sewing thread in a specific repeated unit.

The stitches are formed based on the following three principles.

1 **Intralooping :** Passing of a loop of thread through another loop formed by the same thread.

2 **Interlooping :** Passing of a thread through another loop formed by a different thread.

3 **Interlacing:** Passing of a thread over or around thread or loop of another thread.

Stitch Classifications

Stitch can be divided into six main categories.

1 Class 100 – Single thread chain stitch

2 Class 200- Hand stitch

3 Class 300 – Lock stitch – Hook & bobbin

4 Class 400 – Multi thread chain stitch –Looper

5 Class 500 –Overedge and safety chain stitch

6 Class 600 – Cover stitch – Similar to 400, but with top cover

Introduction of Pressing technology

At the end of this lesson, you shall be able to:

- functions of pressing
- categories of fabric according to pressing required
- tools and Equipment for garment pressing.

Garment Pressing

Pressing is a finishing process done onto a cloth by heat and pressure with or without steam to remove creases and to impart a flat appearance to the cloth or garments. There are various pressing machines which are used in garment industry. Pressing equipments play the role of making garments in a presentable form free from creases and crushing. The aesthetic appeal of the garment is increased by pressing.

Functions of Pressing

1 To remove the unwanted creases and crush marks

2 To induce creases to the garment based on the design requirement

3 To enable the garment fit to the contour of the body

4 To enable further sewing by preparing the garment for next sewing operation

5 To finally finish the garment for packing

Categories of Pressing:

Garments are divided into various classes according to the need of pressing upon them.

1 Garments requiring minimal pressing – Single ply garments such as slips, nightgowns, knitted synthetics and T-shirts.

2 Garments requiring the use of an iron in under pressing and final pressing – For the opening of seams and creasing of edges and for pressing garments with gathers and fullness and in situations where style change is frequent.

© NIMI NOT TO BE REPUBLISHED

3 Garments requiring extensive under pressing and final pressing –Men's jackets, trousers and waistcoats, women's tailored jackets, skirts, top coats. Style change in these garments is infrequent.

4 Garments requiring pleating or 'permanent press' finishing.

Tools and Equipments for Garment Pressing

In garments industry, the following pressing equipment is used.

Steam iron or hand iron

The most frequent but least productive pressing equipment is the hand iron, which is appropriate for executing a large number of jobs in processing with the aid of moisture and heat. In house hold operations, normal electric irons are extensively used. But today steam irons are used for industrial purposes. In stem irons, the iron is heated up by steam which is supplied from a central boiler or a mini boiler.

Dry iron: These are lightweight irons weighing about 1.4 kg with 70°C–240°C heating range along with electronic temperature controls. This kind of iron is made in various shapes and is mostly used for smoothing of finishing operations where steam is unnecessary.

Electric steam irons: These are generally used as a kind of hand iron which could carry out numerous operations, specifically concerned with under pressing. Normally, the electric iron has a heating element, and steam is passed from a central or independent boiler into the steam chamber at the base of the iron**.**

Steam pressing machine

A steam pressing machine consists of a static Buck and Head of complementary shape, which closes onto it. Thus garment is sandwiched between head and buck. This is used mainly for pressing a garment like skirt, shirt, trouser, etc (Fig 1)

Steam Air Finisher / Form pressing machine / Dolly press

Form presses are used largely for off pressing operations.The final pressing is operated on the manufactured apparel product before it is packaged and distributed to the retailer. All the form presses used in the apparel manufacturing are based on the principle of expanding a collapsible bag, made in approximate form of the finished product, with steam or air. (Fig 2)

Fig 1

Fig 2

These finishers are also known as a 'puffer', a form press or a 'dolly' press. It is called as a finisher instead of a presser due to very less pressure exertion during pressing and the entire garment is pressed at the same time thus reducing the time in positioning and repositioning the garment. These finishers are fitted with controls for steam and air release.

Tunnel finisher

This equipment comprises a conveyor fed unit through which the garments are moved while being steamed and dried. A smaller capacity form of this equipment is known as a cabinet tunnel, which could process separate batches of 4 or 5 garments at a time automatically. The production capacity of cabinet tunnel machines is smaller than a larger tunnel finisher. The main objective of the steam is to relax natural fibres. With the garments on hangers, the tension due to gravity removes the wrinkles, and the turbulence of air blowing gives additional energy to remove wrinkles in woven fabrics. (Fig 3)

© NIMI NOT TO BE REPUBLISHED

Pleating

It is a special type of pressing used to produce a range of creases in a garment. The pleats may be smaller which are made by means of machine pleating, or it can be larger which are produced by hand pleating.

There are two types of machine pleating

1 Rotary machine pleating - The rollers are built-in with paired dies similar to gears. The tiny pleats such as crystal pleats and accordion pleats are created using this machine.

2 Blade machine pleating. The pleats are created by the thrust action of the blades. Then the pleats are fixed or set by means of application of pressure and heat as it passes through a pair of rollers.

Permanent Press

Permanent press is mainly used for crease recovery after washing for cellulosic fabrics. The usage of permanent press involves treating the fabric with a post-curing resin during manufacturing followed by drying and then making garments out of it. Permanent presses are used in the case of trousers as there will be requirement to form creases in the seams, hems and pockets.

© NIMI NOT TO BE REPUBLISHED

Module 5: Garment Mass Production

LESSON 25 : Classification of cutting machines

Objectives

At the end of this lesson, you shall be able to explain

- classification of cutting machines.

In bulk garment manufacturing, multiple fabric layers are cut at a time by means of cutting machines. Different types of cutting machines and equipment are available for cutting fabrics and machines are used as per requirement and production volume.

Different Types of cutting Machines

Cutting machine and equipment can be categorized as following:

1 Manual cutting

2 Semi-automatic cutting machine

3 Fully automatic cutting machine

1 Manual cutting

Hand scissors are used for cutting fabric plies manually. Hand scissors are not machines but very useful cutting equipment.Hand Scissors and Shears are common tool in fabric cutting process (Fig 1)

Fig 1

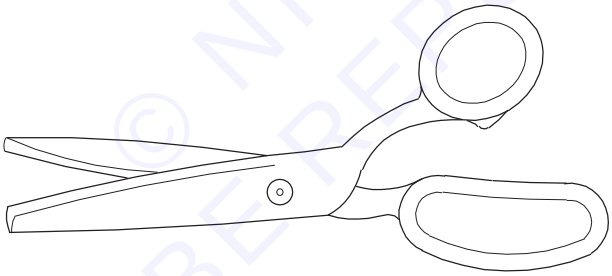

PINKING SHEARS

FDC22T0175

2 Semi-automatic cutting machines

Straight Knife cutting machine: The straight knife is electrically driven, versatile, portable and cheaper than a band knife, more accurate on curves than a round knife and relatively reliable and easy to maintain. Operator moves this cutting machine and fabric remains constant on table.(Fig 2)

Fig 2

NOT TO BE REPUBLISHED © NIMI

Band Knife cutting machine: Band knife are used when a higher standard of cutting accuracy is required than can be obtained with a straight knife. Pieces to be cut are first cut on a block, and then cut exactly on a band knife. Knife is constant and fabric is moved by operator.(Fig 3)

Fig 3

Round knife cutting machine:

A round knife is used only for straight lines or lower no of lays of relatively few plies.It is similar to straight knife but smaller in size.It is used for cutting of smaller garment parts.(Fig 4)

Fig 4

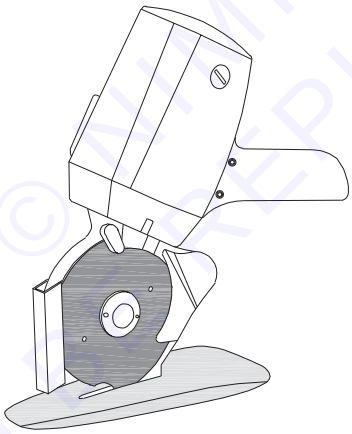

Die cutting machine:

This machine is useful where small motifs with particular shape and pattern and accuracy in cutting are needed. (Fig 5)

Fig 5

© NIMI NOT TO BE REPUBLISHED

3 Automatic cutting machines

various automatic fabric cutting machines are as below:

Computerized cutting machine: Computerized cutting machines are used where high volume of garments is manufactured. This machine cuts fabric layers as per command given in computer system. Automatic cutting machine is also known as CNC machine. In the automatic cutting room, fabrics are spread on the table by auto spreader and the lay is positioned in the cutting table prior to automatic cutting.(Fig 6)

Fig 6

Rib Cutting machine:

Narrow fabric tape of rib is cut from knits fabric. Ribs are used in t-shirts neck finishing or piping operations and many other knits apparel manufacturing.(Fig 7)

Fig 7

Laser cutting machine:

Instead on blade fabric layer is cut by laser rays. Laser cutting machine is also computer controlled machine. (Fig 8)

Fig 8

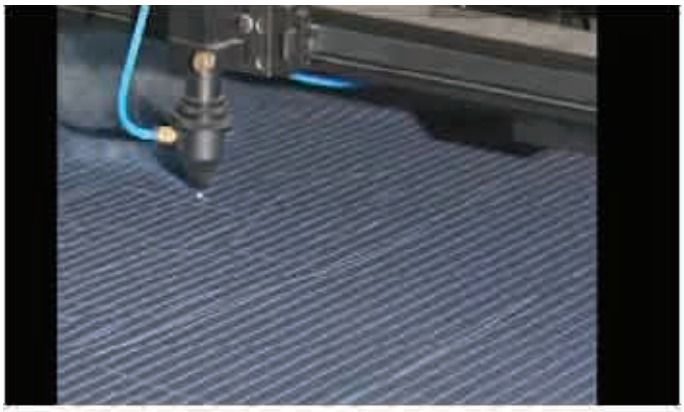

© NIMI NOT TO BE REPUBLISHED

Classification of sewing machine

Objectives: At the end of this lesson, you shall be able to explain

- classification of sewing machine.

Different types of sewing machines

1 Domestic model sewing machine

This is the general home sewing machine available for hobby sewing. This type of sewing machine is fairly simple to use and can do many things and almost all the things you need for sewing clothes, accessories and home furnishing. Some may sew only straight seams but better ones will have zigzag stitches, other decorative stitches, buttonhole stitching.(Fig 1)

Fig 1

2 Industrial model sewing machine

With an industrial sewing machine, one can sew for a longer time continuously a wide variety of material such as wovens, synthetics, woolens, and knits.(Fig 2)

Fig 2

3 Hand operated sewing machine

The wheel of this sewing machine is operated by hand – there is a handle which you turn to run the machine. The major impediment is that its operating speed is very slow.(Fig 3)

Fig 3

NOT TO BE REPUBLISHED © NIMI

4 Electronic sewing machine

A sewing machine is electronic when it has many different options for combining stitches and stitches like overclocking, buttonhole making etc. which operates with convenient switches (not knobs or dials). It will have a lot more selections of stitches (multiple Built-in Stitch Programs) than the mechanical one. An electronic sewing machine also has a built-in computer that runs a series of motors inside and may even have LCD displays and touch screens.(Fig 4)

Fig 4

5 Computerized sewing machine

A computerized sewing machine is an electronic sewing machine with an additional ability to do embroidery work and to set up programs (made with your preferred settings of operations). They will have options to combine a lot of embroidery stitches to do embroidery work anyway we want.(Fig 5)

Fig 5

6 Lockstitch machine

This refers to most of the common sewing machines which sew straight stitched seams as well as for zigzag stitching. It uses two threads – one on top and one on the bobbin. It creates a stitch just like a hand sewn back stitch. The stitching looks the same on both sides of the fabric

Heavy duty lock stitch industrial machines are the term used to refer to those hardworking machines you will buy for a sewing business.(Fig 6)

Fig 6

NOT TO BE REPUBLISHED

7 Chain stitch machine

A chain stitch machine creates a chain stitch to sew on the fabric with just one thread. The single thread is looped around under the fabric and around itself forming a chain under the fabric. This is used to sew straight stitched seams as well as for zigzag stitching .(Fig 7)

Fig 7

8 Blind stitch machine

This specialized sewing machine is usually used in an industrial set up to do blind stitch hemming – which is basically invisible stitching on hems. When you are doing a lot of pants, skirts or shorts you will need a dedicated machine to do the work fast and as efficiently as possible.(Fig 8)

Fig 8

9 Cover stitch machine

These are specialized sewing machines which make cover stitches, which make great looking cover hems on knit garments. You can make tri-cover stitches, wide cover stitches, and narrow cover stitches (3mm, 6mm).They are used for hemming, binding, topstitching or adding decorative effects.(Fig 9)

Fig 9

© NIMI NOT TO BE REPUBLISHED

10 Sergers

A serger is a multi-purpose sewing machine used to make durable seams as well as sew hems and finish fabric edges. It is a very useful machine for sewing knit fabrics (sportswear, stretchy active wear, knit dresses).In this machine; edge neatening can be combined with seam closing together in stitching. Some sergers also has a cutter blade which automatically cuts edges during sewing the edge.(Fig 10)

Fig 10

11 Flat seam machine

There are two types- one with a flat bed and one with a cylindrical bed. It is used for binding cut edges and to sew flat seams on knitted fabrics.(Fig 11)

Fig 11

12 Bar tack sewing machine

This type of machine only makes bar tacks the stitching which reinforces specific areas of garments and accessories like on top of pockets, belt loops.(Fig 12)

Fig 12

© NIMI NOT TO BE REPUBLISHED

13 Buttonhole machine

Industrial sewing involves making hundreds of buttonholes – a buttonhole sewing machine makes these buttonholes very easily. It uses lock stitch or chain stitch to make them.(Fig 13)

Fig 13

14 Button sewing machine

This machine helps to sew buttons – flat buttons, shank button, etc .- very fast. They allow quick change over of different types of buttons.(Fig 14)

Fig 14

15 Long Arm quilting Sewing Machine

If you like quilting you will know what this sewing machine is all about – if you do not own one, you may have longed for one with enough space to rest your large quilt pieces as you sew them.You get mechanical quilting machines and computerized ones which will do the quilting designs automatically on pressing a lever.(Fig 15)

Fig 15

NOT TO BE REPUBLISHED

Feed mechanism

Objectives: At the end of this lesson, you shall be able to explain

- types of feed mechanism.

Feed mechanism is the basic motion of needles, loopers and bobbins.The material being sewn must move so that each cycle of needle motion involves a different part of the material.

Functions:

- To advance the fabric in the feeding zone of the sewing machine.
- To decide the length of individual stitch.
- To avoid different sewing faults.

Types:

1 Drop feed mechanism.
2 Differential bottom feed mechanism.
3 Adjustable top feed mechanism.
4 Needle feed mechanism.
5 Unison feed mechanism.
6 Puller feed m mechanism.

1 Drop Feed Mechanism (Fig 1)

- This is simplest feed system of sewing machine.
- It is also known as regular feed.

Main components of drop feed mechanism are:

a Throat plate
b Feed dog
c Presser foot

Fig 1

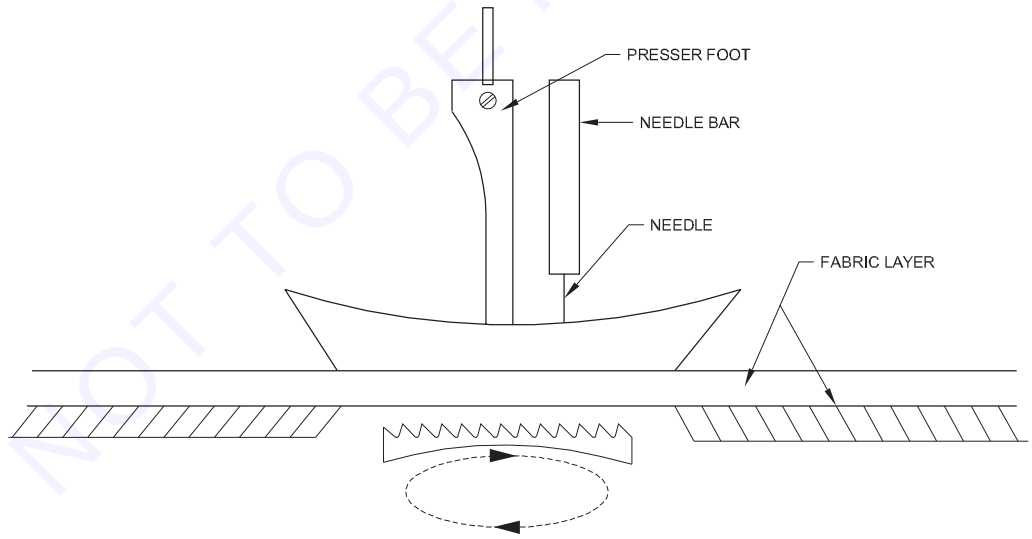

Problems of Drop Feed:

- Two plies of fabric cannot move forward at the same speed. As a result, lower ply is more fed than upper ply. This is called ply shifting/differential feeding pucker/feeding pucker. Sometimes roping is occurred during making of hem for ply shifting.
- It pitches of stitch and feeding dog are same then fabric may be damaged due to repeating contact of feed dog teeth and fabric at the same place.

© NIMI NOT TO BE REPUBLISHED

2 Differential Bottom Feed Mechanism:

- Modification of drop feed system.
- In the feed mechanism the feed dog consists of two section one at back and one at front of the needle.
- Mechanism of each section of feed dog is like the drop feed system. But the speed of each part can be adjusted separately.
- Extensively used for stretchy materials.
- When the speed of the front feed dog is higher than the back-feed dog. The bottom ply is pulled by the back-feed dog but this will overcome by the greater speed of the front feed dog. So, less possibility of shifting.
- Stretching and gathering of fabric can be done by this system.(Fig 2)

Fig 2

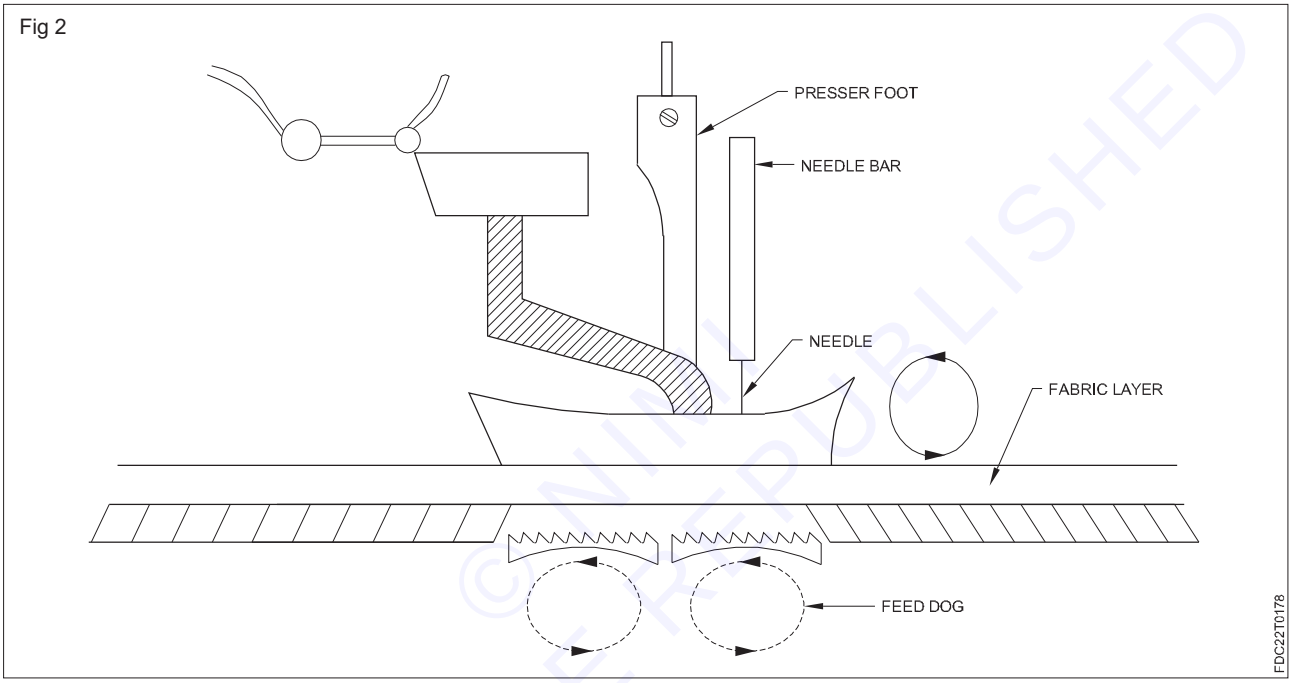

3 Adjustable Top Feed System Mechanism:

- In general arrangement the presser foot is in two sections.
- One holding the fabric in position while the needle form the stitch and the other having length on the lower side and moving or waking in such a way that the top ply is taken along, positively while needle is out of the materials.
- In sewing machine, this feed mechanism can be used with both drop feed and differential bottom feed.
- Combination of adjustable feed and differential bottom feed can make top ply gathering or the gathering of bottom ply. (Fig 3)

4 Needle Feed System Mechanism (Fig 4)

- Another name of needle feed mechanism is “Compound feed”.
- Needle itself moves forwards and backward.
- Needle penetrates the fabric enters into the note of the feed dog and for the advance movement of one stitch length of fabric feed dog and needle pass the fame distance at the same time.
- Then needle rise up and moves to form the next stitch with one step advance.
- Practically useful in bulky sewing situation such as when quilting through the fabric, wadding and for slapping fabrics
- For the change of stitch length, setting of both needle and feed dog should be changed.

© NIMI NOT TO BE REPUBLISHED

Fig 3

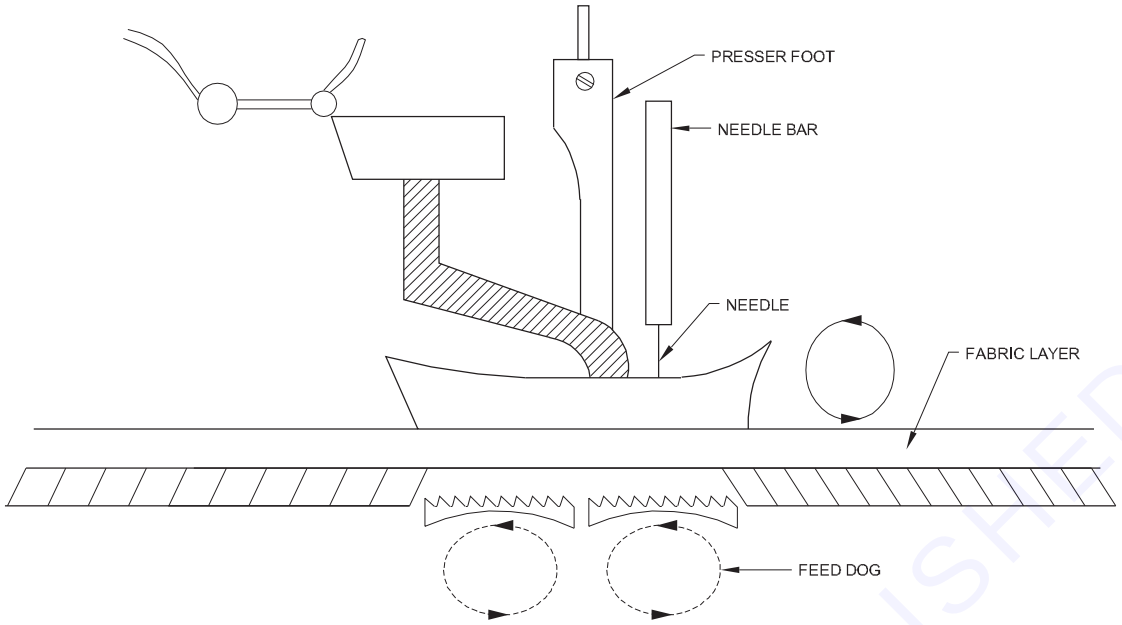

Fig 4

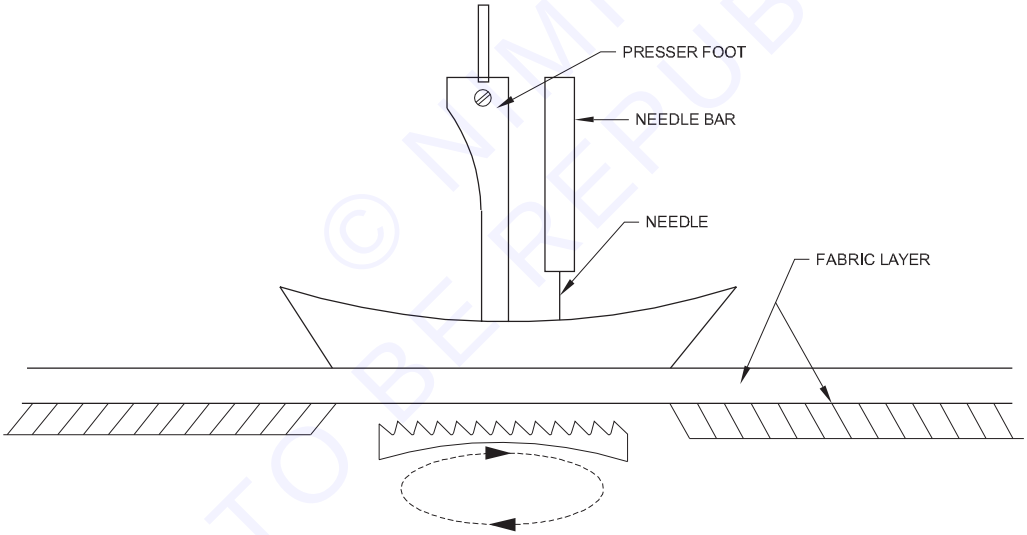

5 Unison Feed System Mechanism (Fig 5)

- It is also known as “walking foot system’ because the presser foot has two independently driven sections; the holding and the holding and the feeding feet.
- It is combination of needle feed and positive top and bottom feed.
- In this system one presser foot is inside the other presser foot and gives movement at different times.
- The inside presser foot and needle are driven at the same time toward the same direction.
- No possibility of ply shifting.
- Suitable for sewing bulky fabrics.

Fig 5

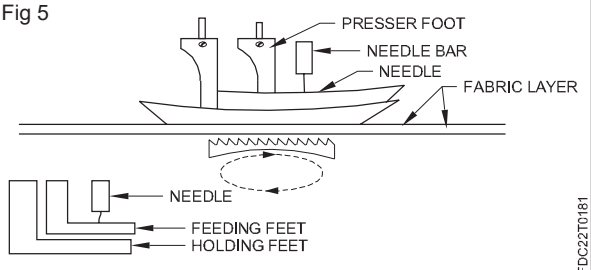

© NIMI NOT TO BE REPUBLISHED

6 Puller Feed Mechanism (Fig 6)

- It is modification of drop feed system.
- A pair of rollers is used.
- These rollers give a pulling motion on the fabric behind the presser foot.
- Top roller is generally driven by machine whitest the lower one moves due to control and presser of the top roller.
- The surface speed of puller roller is slightly higher than the feed dog speed to presser ply shifting roping.
- Useful in multi needle machine.

Fig 6

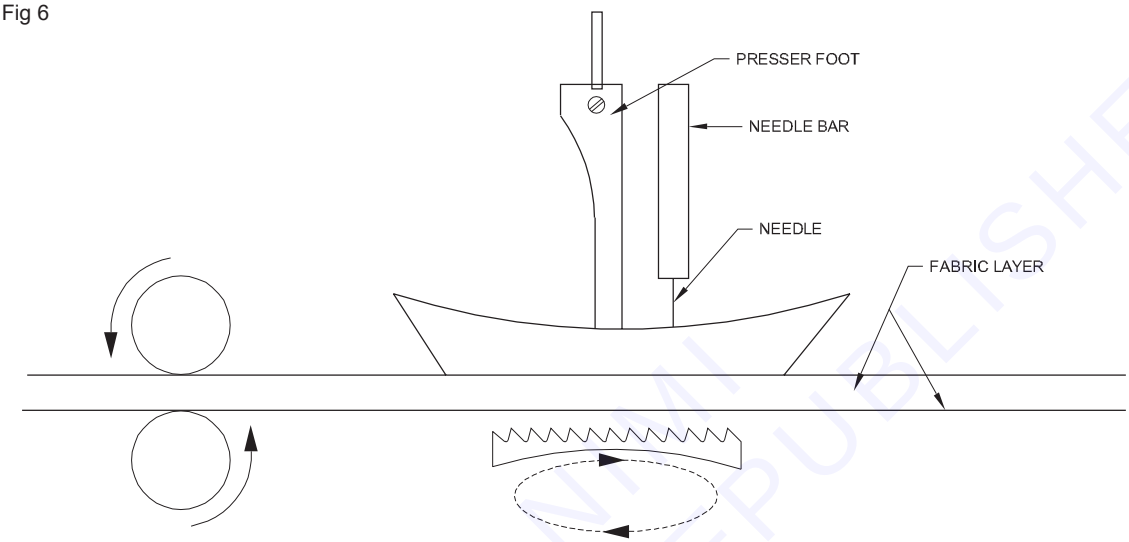

Classification of finishing equipment

Objectives: At the end of this lesson, you shall be able to explain

- classification of finishing equipment
- purpose of pressing, categories & pressing equipment
- stain removal and Packing of garments.

Classification of finishing equipment

A garment factory needs to finish its clothes prior to packing and delivering goods to its customer. The various finishing equipment is as below.

1 **Thread trimmer:** In the sewing process, the operator does not cut thread ends neatly. All untrimmed threads are cut at the finishing stage. Workers use manual thread trimmers to cut thread tails.

2 **Thread sucking machine:** The loose threads on the garment must be removed from the garment. For this thread sucking machines are used.

3 **Manual thread removing equipment:** In knits garments, loose threads are removed manually by using gum tapes.

4 **Garment checking workstation:** At the finishing stage all garments are thoroughly checked. Later garment lots are inspected. For this quality checking workstation is required with adequate light, display board, bins for storing segregated garment.

5 **Vacuum pressing table and steam iron:** A vacuum pressing table and a steam iron are used to remove creases on garments and to iron garments. Inside the vacuum table, there is air suction, which helps to grip the garment when it is ironed. Hot steam is supplied for steam irons to heat the iron.

© NIMI NOT TO BE REPUBLISHED

6 **Spotting gun:** This equipment is used to remove stains from garments. Using a spotting gun, the solvent is sprayed at high speed to the stained area. The solvent dissolves stains found on garments. Sometimes liquid soap, solvent, and toothbrush are used for cleaning stains.

7 **Kimble gun:** Different types of tags, such as hang tags, price tags, and special tags are attached to folded garments, with a kimble gun.

8 **Steam boiler:** To keep the steam press hot all the time, steam generated in a boiler, is supplied to irons. Boiler with the single pressing workstation is also available.

9 **Washing machine:** For bulk washing, the factory uses a high-capacity washing machine. For washing a smaller number of garments and sample pieces, the domestic washing machine is used for removing dirt.

Pressing

Objectives: At the end of this lesson, you shall be able to explain

- purpose of pressing
- categories of pressing equipment.

Introduction: Pressing is the process of application of heat, pressure and moisture either individually or in combination to shape or crease garments or garment components into the geometric forms proposed by the designer. The pressing process influences the final garment appearance and hence the garment appeal. Pressing is done by compressing the fabric between either two flat or curved surfaces.

Purpose of Pressing

The primary goal of pressing is to improve the overall appearance of the garment on the outside. Purpose of pressing is far broader in scope given as below.

1 To flatten out the undesirable wrinkles, creases and crush marks.

2 To make creases where the garment design needs it.

3 To mould the garment to the silhouette of the body.

4 To prepare garments for further sewing.

5 To refinish the garment after completion of the production process.

Basic Components of pressing

The main elements of the pressing process are heat, pressure and moisture, which deform fibers, yarns and fabrics to accomplish the required effect.

1 **Heat** – It is necessary to soften the fibers, stabilize and set the fabric in the desired shape. Temperature must be selected based on the fibers, yarns and fabrics.

2 **Steam (Moisture)** – It is fastest way of transmitting the heat onto the fabric. Steam and heat are essential to ease the fabric from tension and make the fabric with adequate flexibility so that it can be moulded to get the required contour.

3 **Pressure** – It is applied to change the form and increase the durability of the moulding. Pressure could be applied by means of a mechanical device or steam.

4 **Drying** – Subsequent to the steam and pressure application on the fabric, the garment panel or finished garment must be dried and cooled; thus, the fabric can return to its regular moisture content and steady condition. This could be done by removing the surplus water from the fabric by means of a vacuum action which cools it at the same time.

5 **Time** – The time period for which the garment is exposed to steam, pressure and drying depends on the type of fabric being pressed and there will be an optimal time period for each component.

Classification of Pressing Equipment

The pressing machines are classified in three major categories based on how the machines are pressed.

1 Solid Pressure Equipment (Pressing Equipment)

- Pressing irons

© NIMI NOT TO BE REPUBLISHED

- Buck presses
- Mangle presses
- Block presses
- Form presses
- Pleating presses
- Creasing machine or Edge folders

2 Moisture Pressure Equipment (Steaming and Wetting)

- Steam guns and jets
- Steam chambers

Different Types of Garment Pressing Category

Solid surface pressing equipment uses a firm surface to apply pressure while steam and heat mould the fabric, garment or garment parts. Pressure may be applied through a rolling action, gliding action or compression.

Hand irons

It is a basic and most important pressing equipment in garment industry. The two basic kinds of irons used are dry iron and Electric steam irons. Normally, hand irons are available in different shapes and weights.Narrow hand irons are used for seam opening on sleeves and trouser legs. The wrinkle marks on the garment are evaded by the narrow sole construction of the steam iron as well as curved and narrow ironing bucks. Teflon-coated soles should be used for ironing fabrics that are sensitive to luster.

Iron table

Some types of ironing tables are listed below:

- Jacket seam ironing station
- Trouser seam ironing station standard
- Sleeve seam ironing station
- Dress board ironing tables
- All purpose table
- Flat top ironing tables
- Blouse and shirt ironing station
- Trouser leg ironing station
- Hip-bow ironing station
- Concave ironing station
- Convex ironing station
- Curtain ironing table

Steam press / buck press

Steam presses commonly consist of a static buck and a head of complementary shape closing onto it, thereby sandwiching the garment to be pressed. It consists of a frame housing the buck which is normally in round shape for pressing different garments and linkages to close the head by a scissor action.Steam is passed to head and buck using a pipe system. Adequate controls are provided for controlling head closure and vacuum. Vacuum is created to provide suction through the buck using a vacuum system. The typical pressing cycle is as follows:

Carousel press

Carousel press is a new development in pressing operation in which a pair of bucks is provided that rotates between operator and the head. The head can be of single or double based on the bucks being identical or an opposite pair for pressing the left and right of a garment part. In this press, scissor action and vertically acting heads can be used.

© NIMI NOT TO BE REPUBLISHED

Trouser pressing

Trousers include a wide variety of garments, ranging from jeans, women's trousers with simpler construction and requiring a less sharp crease, men's trousers including four pockets, and suit trousers. The trouser pressing is carried out in two operations along with under pressing of the seam. The first operation is done for legging on a flat press to set and crease the legs and the second operation for topping in a series of lays around the top of the trouser on a contoured press.

Double legger-pressing machine

Double legger-pressing machine is used for pressing trousers, and in this machine both the legs are pressed simultaneously with the top hanging down between two separate bucks. These machines consist of vertically acting heads, carousels and microprocessor controls. Heat resistant silicone foam is used for covering bucks of steam presses and tables used with irons and vacuum boards and the outside being covered with a woven polyester cover. Sometimes stretch nylon is used with the highly contoured bucks.

Steam finisher:

This equipment is known as a form press or a 'dolly' press. It has a compressed air system, frame for a steam distribution system and a pressing form made of a canvas bag in the suitable silhouette of the garment to be pressed. The pant steam finisher and universal steam finisher are shown in below figure.(Fig 1)

Fig 1

Tunnel finisher

Tunnel finishers are used for finishing knitted goods. They can be used for synthetic fibre garments and their blends also. This garment finishing process involves no pressure application and reduced handling of garments in steam tunnel. In this finishing process, the garments are put on hangers and fed through a cabinet using a motorized rail. The garments pass through sections with superheated steam and it is dried by blowing air. In some cases garments are loaded onto frames and passed through the tunnel on a conveyor. (Fig 2)

Fig 2

NOT TO BE REPUBLISHED ©NIMI

Steam helps to relax the fibers in the garment and the tunnel helps in avoiding the need for any other pressing process before or after this operation. In some cases, it completely eliminates the other pressing processes. These tunnels are incorporated with infrared drying in some cases. As the garments are vertically hung, the turbulence of blown air provides additional energy to remove wrinkles in woven fabrics. Proper care should be taken during pressing operation for fibers where excessive agitation causes fabric deformation.

Press cladding

Bucks of steam presses and the ironing tables used with hand irons are normally covered with silicone foam. This is covered on the outer side normally by a top cover of polyester woven fabric. The heads of the steam presses could be covered with several layers of materials like a layer made of metal gauze for uniform steam distribution, a layer of synthetic felt to shield the next layer, the main layer of cotton knitted padding, and a last layer of outer cover as on the buck.

Creasing machines

These creasing machines are used to fold over and press the edges of clothing components such as pockets or cuffs to prepare them for easy sewing. Blades are used to create creases and folds. The component is kept over a die with blades aiding in forming creases around it and required pressure is exerted during pressing cycle. Creasing machine is actually preparation under pressing machine.

Pleating Machine

Pleating is the process of creating pleats in the garment.Pleating is done by using pressure, moisture and heat. There are two types in machine pleating. One is a blade machine in which pleats are formed by the action of blades and then set by heat and pressure when they pass through a pair of rollers and the other type is a rotary machine in which the rollers are fitted with complimentary dies.

Block or Die pressing

In die pressing, the fabric is kept over a fixed die prior to the application of steam, heat and pressure. This is normally used for shaping and moulding of hat and gloves during the manufacturing process. Another variety of an automated die pressing machine is utilized for combined folding and creasing of patch pockets as well as pocket flaps, in which the operator has to keep the components to be pressed over a die and engages the machine for folding and creasing.

Permanent press:

The permanent press method normally results in reduction of fabric strength. This method was developed for producing better crease recovery of cellulosic fabrics. The process involves processing the fabrics during its manufacture with a resin. A permanent press fabric is processed after the resin treatment and is then made into garments. The method is commonly used for trousers to introduce the creases at the seams and hems and down the front and back. The garments are then passed through an oven to cure the resin in the fabric.

© NIMI NOT TO BE REPUBLISHED

Stain removal

Objectives: At the end of this lesson, you shall be able to explain

- stain removal
- solvents used in stain removal.

Stain removal is the process of removing a mark or spot left by one substance on a specific surface like a fabric. A solvent or detergent is generally used to conduct stain removal and many of these are available over the counter. Most stains are removed by dissolving them with a solvent. The solvent to use is dependent on two factors: the agent that is causing the stain, and the material that has been stained. Different solvents will dissolve different stains, and the application of some solvents is limited by the fact that they not only dissolve the stain, but also dissolve the material that is stained as well.

Solvents

These are some of the solvents that can be used for stains, with some examples of the stains that they are capable of removing:

Oxidizing solvents

- Household bleach
- Hydrogen peroxide
- Sodium perchlorate

Reducing solvents

Sodium hydro sulphite and sodium hypochlorite are normally used for removing stain and dyes colors.

Detergents

Surfactants (detergents) can be used for stain removal. They can help to emulsify compounds that are not usually soluble in water. For example, if you put oil in water, they tend to stay separated. If you put oil, detergent, and water together and shake them up, then you get a mixture that can help to remove stains.

Acids

Lemon juice, containing citric acid which is the active bleaching agent, can effectively remove stains. Its action can be accelerated by exposing the stain to sunlight, or some other UV source, while soaking.

Packaging

Objectives: At the end of this lesson, you shall be able to explain

- types of garment packing.

Packing of garments is done as per the requirement and choice of buyer. There are various types of garment packing used in apparel industry.

Types of Garment Packing in the Finishing Section

Stand-Up Pack

This type of packing is commonly used for shirts and hence termed ‘shirt packing’. For this type of packing, the garments have to be pressed prior to packing and are packed with additional packing materials like tissue paper, back support, pins or clips, inner collar patty, outer patty, etc.

Flat Pack

In this packing method, the garments are pressed and folded well as like in a stand-up pack, however with fewer additional packing materials. It is generally normally used for ladies’ garments and has a flat surface. The size of the folding is based on the garment style and specifications of the buyer. The common sizes of the flat packs are 8″ × 10″ and 10″ × 12″.

© NIMI NOT TO BE REPUBLISHED

Hanger Pack

It is a simple garment packing method where the garments are secured in a poly bag with a hanger after pressing. Here polybag is the only material used. This type of packing can be used for all types of garments, especially for blazers, coats, pants, etc.

Deadman Pack

This kind of packing is used for shirts. Here, the sleeves are folded in front of the pack and pinned with each other. Next, the garments are folded in the centre. As it resembles the appearance of a dead body, it is called a 'deadman pack'. It is a simple packing method using only pins or clips and polybags.

Introduction to sewing machine attachments

Objectives: At the end of this lesson, you shall be able to explain

- about various sewing machine attachments.

Sewing machine attachments are the auxiliary devices which are attached to sewing machine additionally for specific requirements while sewing.

Various Sewing Machine Attachments are as below. (Fig 1)

Fig 1

All-purpose foot

The most basic sewing machine attachment is the all-purpose foot. It comes preinstalled with the sewing machine, and it's versatile enough to be used for most sewing projects. It is also sometimes called the straight stitch foot or standard foot being used in straight single needle sewing machines. You can distinguish an all-purpose foot from others by the toes on the sides of the needle. With the help of this foot, various basic stitches, zigzag stitches, or even some decorative stitches can be made. You may even be able to sew stitches as wide as 7mm.

Blind hem foot

There are different types of blind hem feet, but you use this sewing machine attachment to make professional-looking hems on clothing. It can make invisible stitches because you can put the fabric along its guide because the grooves on foot stabilize the fabric while sewing.

Button stitch foot

The sewing machine is invented to make sewing quick, easy, yet precise. Putting buttons on projects becomes fast and straightforward thanks to button stitch settings and the sewing machine attachment called the button stitch foot.

© NIMI NOT TO BE REPUBLISHED

Zipper foot

Attaching zippers became much easier with the zipper foot. It is also among the most common sewing machine attachments, and most sewing machines have it included. Compared to other feet, it is narrower to allow stitching around the zipper. The zipper foot can hold the zipper in place as the needle gets close to the edge of the project, thanks to its notches. Therefore, you can sew without hitting the zipper teeth, which can break the needle. Some zipper feet are even adjustable by having a slider on the back so that you can change its position.(Fig 2)

Fig 2

Satin stitch foot

If you make decorative stitches often, it's best to get a satin stitch foot. This sewing machine attachment allows the machine to make dense stitches that it's also used for appliques. Therefore, another name for the satin foot is the applique foot. You can determine a satin stitch foot by its groove underneath to prevent decorative stitches from getting distorted. Some are even transparent, so you can see how your stitches work out. The transparency can also help you know if you are attaching the applique correctly.(Fig 3)

Fig 3

Module 6: Fashion Styling

LESSON 26 : Introduction to Fashion styling

Objectives

At the end of this lesson, you shall be able to:

- introduction to fashion styling
- brief knowledge of various events and their dressing styles.

Fashion styling

It is the art of combining clothes and accessories into outfits representing a well-defined fashion style or combinations of fashion styles with current stylistic trends to confer the wearer with a unique visual identity and personal fashion style.

Fashion styling can be a creative and fun job, but it is also serious and fiercely competitive. It is both a very demanding and rewarding profession. Stylists have to be both collaborators and entrepreneurs, as we work with a team and /or a client to create the work, so good communication and social skills are essential. Fashion styling is a complex skill to master that requires an understanding of fashion history, aesthetics, patterns, motifs, colors, cutting and sewing styles, and design forms of self-expression and cultural identity.

Fashion Stylist

A fashion stylist is an expert in curating, mixing, and matching clothes, footwear, and accessories of similar aesthetics into outfits depicting fashion styles, fashion trends or blends or both. Fashion stylists create looks or images for their brands and clients that allow the muse or model to engage with their intended audience. Fashion styling as a profession, is fast becoming one of the most sought after career paths globally because many people still don't know exactly about fashion styling.

The Core Role of a Fashion Stylist

Fashion stylists are the vital link between concept, design, presentation, and finished product as put together in the form of outfits and accessories worn by their clients. Fashion stylists are aware of the work of past and contemporary fashion designers, brands, fashion shows, fashion weeks, fashion trends and fads.

Like fashion designers, stylists scan for the current fashion trends, create visual brand and design concepts, and ensure accuracy and relevancy at every step that leads to the finished product.Fashion stylists have excellent knowledge of classic fashion styles, historical, cultural, and socio-economic trends, clothing design, manufacturing, branding, photography, and marketing.

Functions of Fashion Stylists

The work of a fashion stylist starts by understanding the client's need, context, occasion, thematic background, season, and budget. The stylist also performs a body and personality assessment and explores variations that

suit the client best. Once these aspects are well defined and established, the stylist develops a styling concept further inspired and informed by historical and current fashion styles. The styling concept is built as a mood board that illustrates the stylist's vision and comprises materials, colors, patterns, and visuals that the stylist deems appropriate, given the information provided. Accordingly, apart from working with public figures to craft their personal way of dressing and unique look, stylists engage in a wide range of activities such as:

1 Attending runway shows, fashion brand showrooms, and fashion industry events to keep apprised of the latest fashion creations and trends.

2 Researching period-specific aesthetics and the fashion styles of previous eras (via magazines, movies, and old look books),

3 Identify and source the most suitable clothes and accessories from various clothing manufacturers and apparel brands worldwide.

4 Consulting fashion designers, costume designers, creative art directors, fashion models and magazine editors, film and TV directors, photographers, hairstylists, and makeup artists.

5 Assisting fashion buyers for major clothing retail chains and online marketplaces.

6 Advising costume designers for movies or television shows (in this role, they are known as "wardrobe stylists").

Fashion stylists can be found working in all of the following contexts-

1 At the clients' venue or their own styling lab.

2 On professional fashion photoshoots.

3 On the set of fashion advertisements and televised commercials.

4 On the set of music videos.

5 On political campaigns, maintaining the candidate's appearance.

6 In the TV newsroom.

7 Consulting sports teams on the season's appearance and uniforms.

8 Advising costume designers for movies and television shows (in this role, the stylist is known as a "wardrobe stylist").

9 Developing the personal fashion style and dressing of an aspiring or current public figure.

Different Types of Fashion Stylists

There is commercial, editorial, and personal styling work and all the associated careers, each with mood boards, styling types, clients, agencies, fashion photo-shoots, and shows.There is a wide range of career opportunities for candidates in styling, and below are the most popular job roles for fashion stylist graduates:

- Fashion Design Coordinator
- Personal Stylist
- Wardrobe Stylist
- Fashion Editor
- Celebrity stylists

1 **Personal stylist-** A personal stylist advises individuals on new fashion trends, clothing styles, personal styles, colours and make-up. A personal stylist is not to be confused with a wardrobe stylist, who selects the clothing for published editorial features, print or television advertising campaigns, music videos, concert performances, and public appearances made, by celebrities and models.

2 **Wardrobe Stylist** -Wardrobe stylists are fashion stylists who advise costume designers for movies or television shows.

3 **Fashion Editor** -Fashion editors are fashion stylists specialized in creating photoshoots for fashion magazines by choosing the photographers, models, outfits, and location or background.

4 **Celebrity Stylist-** A celebrity is someone who is famous, especially in areas of entertainment such as films, music, writing, or sport. For example- Priya Patil, has been fashion stylist of Celebrity Amitabh Bachchan and been revamping his wardrobe since the 10th season of the popular television quiz show 'Kaun Banega Crorepati'.

© NIMI NOT TO BE REPUBLISHED

Brief knowledge of various events and their dressing styles

Brief knowledge of various events and dressing styles

Introduction to the events

Events create opportunities for people to connect with an area, spend time together, celebrate and experience the diversity of cultures and foster creativity and innovation. Events contribute significantly to community building, lifestyle and leisure enhancement, cultural development, tourism promotion and increased visitation, volunteer participation, fundraising and economic development. Most importantly, events create a sense of fun and vibrancy, resulting in a strong sense of community connectivity and pride.

Types of Events

Various events are as below

Cultural Celebrations

- Festivals
- Carnivals
- Commemorations
- Religious events

Political

- Summit
- Royal occasions
- Political events
- VIP visits

Arts and entertainment

- Concerts
- Award ceremonies

Business and trade

- Meeting , convention
- Consumer and trade shows
- Fairs ,markets

Educational and scientific

- Conferences
- Seminars
- Clinics

Sport competition

- Amateur/professional
- Spectator/participant

Recreational

- Sport or games for fun
- Private Events
- Weddings
- Parties
- Socials
- Business events and tourism

Dressing Style

It depends on the type of event. Example- For any type of celebration event party wear is used as per the specific theme selecting colours, silhouettes and textures accordingly. For office, business and education pupose, formal wear dressing style is used. For sports, stretchable and comfortable outfits are used as per the requirement of particular sport type. For routine and leisure, casual dressing styles are used.

© NIMI NOT TO BE REPUBLISHED

Module 7: Merchandising

LESSON 27 - 31 : Introduction to the working of export house and buying house

Objectives

At the end of this lesson you shall be able to

- introduction to the working of export house and buying house
- brief knowledge of merchandising documents.

Introduction To The Working Of Export House And Buying House

Garment working export house- A garment export house procures raw materials for garments, cut-make-finishes garments in production facilities and ships packed garments to the destination countries.Authorisation and customs clearance for both imports and exports may be allowed on self-declaration basis. Exemption from furnishing of bank guarantee for Schemes under Foreign Trade Promotion, unless specified otherwise. Input-output norms maybe fixed on priority within 60 days by the Norms Committee.

Working procedure of a garment export house

Garment export house is a manufacturing company. In an export house, most work forces are sewing tailors and helpers. Export house has small number of staff compared to total number of workers. Export processing is carried out through various processes. Work is divided within different departments and each department works on the responsible jobs.

Total processes are divided into two categories –

1 Pre-production process

2 Production process

Pre-production process (Working procedure in sampling)

- Pre-production activities involve sample making, development of print and embroidery design, sourcing of fabric and trims and other item like packing accessories.
- Everything is sent to buyer /local buying office for approvals. Development of pattern, grading Working procedure in sampling (Pre-production)
- Pre-production activities involve sample making, development of print and embroidery design, sourcing of fabric and trims and other item like packing accessories.
- Everything is sent to buyer /local buying office for approvals. Development of pattern, grading of patterns etc.
- Merchandising department of an export house is responsible to look into pre-production activities.

Production Process

The working procedure of an export house completely depends on the resources available in a garment factory. Working procedure in a sequence is given as below.

1 **Style analysis** - Style analysis is the process of determining what type of investment behaviour an investor or money manager employs when making investment decisions.

2 **Receiving order from Buyer** - A purchase order is a commercial source document that is issued by a business' purchasing department when placing an order with its vendors or suppliers.

3 **Fabric sourcing** - Fabric sourcing involves the careful selection and acquisition of suitable fabrics for garment production-

4 **Checking and testing of Fabric** – fabric testing includes measurements such as fabric weight, fabric width, shrinkage testing, colour fastness washing, fastness, to like pilling, testing and bursting strength etc.

© NIMI NOT TO BE REPUBLISHED

5 **Make PP sample -** A PP sample, also known as a pre-production sample, is used to confirm the details, features, and quality of the product.

6 **PP Sample approval** - While trim and fabric ordering is going on, at the same time the sample approval course of action is additionally in progress. The minute a style is chosen it goes to the tech division for fitting.

7 **PP Meeting -** When garment factory confirm a new order, general manager (GM) arrange a meeting in the elementary stage of the production that's called pre-production meeting (PPM).

8 **Pilot run sewing and finishing** - A pilot run is a precautionary manufacturing process of Garments manufacturing after PP meeting and before starting bulk production.

9 **Analysis of Pilot run garments -** The main purpose of the pilot run is to fix garments measurement within the tolerance limit.

10 **Approval for bulk cutting -** If the factory gets the right measurement in the pilot run piece after processing, bulk cutting is approved.

11 **Bulk cutting start** - Make a cutting plan by optic plan software. Receive cutting approval report from the quality department. Make requisition slip to receive required fabric from the material department. Fabric received from the material department as per approved consumption.

12 **Feeding** cut components to sewing lines

13 **Stitching of garments** – A stitch is a single loop of thread. Stitching is the process of attaching together two or more apparel parts by applying stitches with sewing thread. The main two components of stitching are the seam and the stitch.

14 **Thread cutting -** Thread trimming is one of the common processes in industrial apparel manufacturing. Cutting threads from stitched garments prior to garment finishing is a non-value added but unavoidable process.

15 **Garment washing -** Normally garments washing means cleaning of dirty garments with soap or detergent. But industrial garments washing is a technology which is used to modify the outlook, appearance, comfortability and design of garments.

16 **Finishing of garments** – Garments finishing is the last step of garment making. All of the finishing processes are done here.

17 **Checking of garment prior to heat press and after pressing** - The process by which the unwanted creases and wrinkles are removed from the garments and the outlook of the garments is improved as well is termed as pressing.

18 **Folding and Packing** - The most common folding methods used are manual folding and automatic folding. After folding, fabrics are often subjected to packing procedures like heat sealing or wrapping.

19 **Garment inspection by buyer representative -** Inspection is the act of looking at something closely in order to learn more about it, to find problems, to see if rules are being followed and things are in their proper condition.

20 **Shipping documentation and shipping approval from buyers** - Shipping is one of the most important yet complicated aspects of running an online business. Not only do you have to consider the costs and logistics of sending out orders to your customers, but you also have to make sure that those orders are accompanied by the right paperwork.

21 **Shipment dispatch -** This is the part of the fulfillment process when products are packed and are ready to be shipped.

Garments Buying House

Working Procedure of a Garment Buying House:

Garments buying house works as intermediary between the buyer and the manufacturer. Buying house procures garments from the manufacturers and exports to other countries. Garment merchandisers are key persons in buying house. Garments Buying House is a very profitable business, any smart people with less investment can earn millions of Dollars. Basically Garment Buying houses try to communicate with buyers of other countries who want to buy garment products. Then they contact with garment factories that can make those kinds of products and fulfil buyer's demand. Like this they create a contract between these two parties. Sometime buying houses make their own sample section, so that they do not have to go to factories for collecting sample and they can

© NIMI NOT TO BE REPUBLISHED

attract customers faster and easily. On the other hand, they create a show room of their product to attract the buyer. Moreover, this house maintain the merchandiser to follow up the product processing line perfectly and also build a quality assurance team for checking the actual quality of the product.

Process Flow Chart of a Garment Buying House

Contact with the Buyer
↓
Communicate
↓
Meeting
↓
Send Letter of Credit (L/C) to the Garment
↓
Develop the product
↓
Inspection by Buying House
↓
Complete working paper or document for shipping
↓
Send one copy to the bank↔Attach one copy with the product
↓
Shipment

Working Procedure of a Garment Buying House:

Every organization has its own working procedure. It's varies from organization to organization. Buying house work flow is given below,

1 First of all marketing merchandiser contact with a buyer and collect an order by showing the garments they made before or directly ask which type of garments buyer need.

2 Then he /she find out the suitable factory for that specified garments. The factory must be audited by recognized organization like Oeko-tex, WRAP etc. (Depends on Buyer).

3 Do consumption and costing and bargaining with factory for cost for the specific product. Finalize cost and send it to buyer.

4 Then development merchandiser develops the product send 1st pattern for any correction.

5 Usually buyer makes some modification on 1st pattern, so 2nd pattern is submitted according to 1st pattern comments.

6 Then fit sample is made and QC (Quality Controller) check is it follows the approved 2nd pattern.

7 Then the Red seal sample is sent for approval which is also known as buying sample. And if the red seal sample approved then the order is confirmed.

8 Then production merchandiser starts his work.

9 Production merchandiser basically follows up the total production stage. After getting approval of red seal sample he has to book the fabric and trims.

10 He has to Follow up the fabric and trim arrived in factory in time or not. After all approval he does production planning meeting with factory.

11 QC has to follow the production is running with approved item, fabric and accessories or not. He helps production merchandiser by giving all production information.

© NIMI NOT TO BE REPUBLISHED

12 QC's main task is to check all samples (red seal, gold seal, web sample etc) sent to buyer, and help factory people if there any confusion with production.

13 Fabric, trims and accessories are checked in lab in buying house. It's called in-house test like bulk fabric hanger, shade variation in shade continuity, lab dip, fabric quality etc.

14 Different types of inspection also done in lab before ex-factory/shipment.

15 After doing ex-factory showing packing list and some commercial activities buying house receive their commission.

Breif Knowledge Of Merchandising Documents

- Costing
- Sourcing
- Bill of material
- Vendor evaluation
- Purchase order

Costing

In a business, cost is the amount of money that is spent on the production or creation of a garment. From a seller's point of view, cost is the amount of money spent to produce a product. If sellers sold their goods at the same price as they cost to produce, then they would break even. This means that they would not lose money on their sales, but their company would not make a profit either. Cost does not include a mark-up for profit. In fashion manufacturing, costing means the process of estimating and then determining the total cost of producing a garment or item. It generally includes raw material cost, construction of the garment, trims, packaging, shipping and operating expenses and manpower, among others.

Sourcing

The process of fabric sourcing in garment manufacturing is a multifaceted endeavor that plays a pivotal role in the fashion industry. It involves the acquisition of suitable fabric materials for creating clothing items, ensuring that they meet quality, quantity, cost, and sustainability requirements. This comprehensive guide explores the intricate world of fabric sourcing, delving into every aspect, from understanding fabric requirements to negotiating contracts and considering sustainability. Whether you are an established manufacturer or a novice in the field, mastering the art of fabric sourcing is essential to produce garments that meet market demands and industry standards.

Bill Of Material

The Bill of Materials (BOM) is a list of raw materials to produce a garment and prepare it for shipment. When your business makes a physical product, you need to source the materials to make it. Sourcing materials is an essential part of the production process. The materials you choose make a huge difference to the quality of your product.

A typical BOM table includes main fabric, secondary fabric (lining), thread, trims, closures, labels, and packaging.

This is often created by a technical designer and product developers. These designers work closely together, sending comments to factories who can then adjust the Tech Pack accordingly. A technical designer usually creates a Bill of Materials based on a CAD (Computer-Aided Design) drawing.

Fabric consumption and material consumption are calculated separately and added to the BOM sheet.

Bill of Material Format

Following one is an example of the BOM format. BOMs are prepared on a spreadsheet or by ERP. You can develop BOM template of different product types and use the same for new orders.

When making a BOM for a new order using an exiting template, edit items name, consumptions, and unit price and you will get the total amount for the listed items.

For example

Bill of Material

Buyer	Reebok	Prepared by	Sushmita
Style	#2345JK	Date	12/12/2012
PO#	JK-240		
Order Qty	5000		

Seq. No.	Item Description	Consumption	Extra Purchse	Qty.	Unit of measure (UOM)	Rate (Rs.)	Unit of price	Amount (Rs.)	Remarks
1	Shell fabric Single Jersey 160 GSM	0.260	5%	1365.00	Kgs	260.00	Kgs	354,900.00	
2	Rib (2/2) 260 GSM	0.002	2%	10.20	Kgs	350.00	Kgs	3,570.00	
3	Sewing Thread	200	7%	2675.00	Tube	6.00	tube	16,050.00	
4	Size Labels	1	3%	5150.00	unit	3.00	unit	15450.00	nominated vendor
5	Hang tags	2	3%	10300.00	unit	5.00	unit	51500.00	
6	Cartons			50.00	unit	50.00	unit	2500.00	
7	Polybag	1	1%	5050.00	unit		Kgs	0.00	
								0.00	
						Total Amount		443,970.00	

Approved By

Sourcing Department

Sample Copy
www.onlineclothingstudy.com
© NIMI NOT TO BE REPUBLISHED

Uses of Bill of Materials

BOM is a common tool used for preparing material cost in manufacturing sector. As the format name says, it include all the raw materials required for making a product. It is a central place to know about parts and items names in one place.

In a garment manufacturing unit and in a buying house, an apparel merchandiser takes care of various fom of BOM

Depending on the need and inventory management requirement you can use BOMs in various level. You can include the sewing operations' cost and process costs in the BOM for calculating manufacturing cost. Preparing bill of material following the product design and apparel tech pack. In apparel manufacturing, we refer to bill of material to know what all items are required to purchase. We get the actual rate of each items per unit.

Vendor Evaluation

Vendor evaluation is the process of assessing a potential supplier's ability to provide goods or services in line with an organization's needs. The evaluation may consider factors such as price, quality, delivery times, service levels, and so on.

Definition - Vendor evaluation is a systematic approach used by businesses to assess different suppliers before selecting one to do business with. It involves comparing potential vendors on criteria ranging from pricing, service quality and delivery time, among other things.

The Different Types of Vendor Evaluation Processes : There are different types of vendor evaluation processes that can be used to assess the capabilities of potential suppliers. These include request for proposal (RFP) processes, Request for information (RFI) processes, and reverse auctions.

Each type of process has its own strengths and weaknesses, so it's important to select the right one for your needs. RFPs are typically used for complex procurement projects where a detailed understanding of the supplier's capabilities is required.

RFIs are more suited to smaller projects or when less detailed information is needed. Reverse auctions can be used in either case, but they tend to be more effective when pricing is the primary consideration.

1 **Request for Proposal (RFP)** – This is a document that is sent to potential vendors in order to request a proposal for their services. This is often used when there is a specific project in mind and the organization wants to compare proposals from different vendors before making a decision.

2 **Request for Information (RFI)** – This is similar to an RFP, but it is less formal and typically used when an organization is still in the research phase and wants to gather information about potential vendors before issuing an RFP.

Purchase Order

A purchase order is a commercial source document that is issued by a business' purchasing department when placing an order with its vendors or suppliers. The document indicates the details.

- Product/Style name
- Product description
- Order quantity
- Size break-up in order
- Fabric Details
- Print and Logo design
- Washing Details
- Measurement sheet-
- Labeling
- Price
- Packing details
- Tags details
- Shipping Address

© NIMI NOT TO BE REPUBLISHED

LESSON 32 : Introduction to Merchandising

Objectives

At the end of this lesson you shall be able to

- about importance of Merchandising
- merchandise Management and Key Roles of a Merchandiser
- types of Buyers.

Introduction

Merchandising management is a business process where retailers examine consumers' preferences to determine what products to stock in the store and how to arrange the products. When retailers manage a business's merchandise effectively, they can attract customers and increase sales. With merchandise management, you can also determine the best price to fix for products to maximize profits. It can help retail stores discover marketing strategies to meet their sales targets.

Merchandising presents the products in retail environment to influence the customer's buying decision

Importance of Merchandising

Merchandising, or how products are displayed in the store, plays a critical role in the overall success of a business. After all, when customers come into your store, you want them to buy. Effective merchandising is a tool that gets them closer to that purchase decision. But having effective merchandising demands discipline and planning. It's hard work. You must pay attention to detail on a daily basis. You also must realize that many of your competitors have effective merchandising. That means your customers are used to seeing it, so they expect it from you, too.

Merchandising makes several important contributions to your store. It increases sales by making a store appealing to your customers. It improves profitability by generating more margin dollars. It controls costs by improving the productivity of the sales floor as well as each employee.

Types of Merchandising

Export merchandising

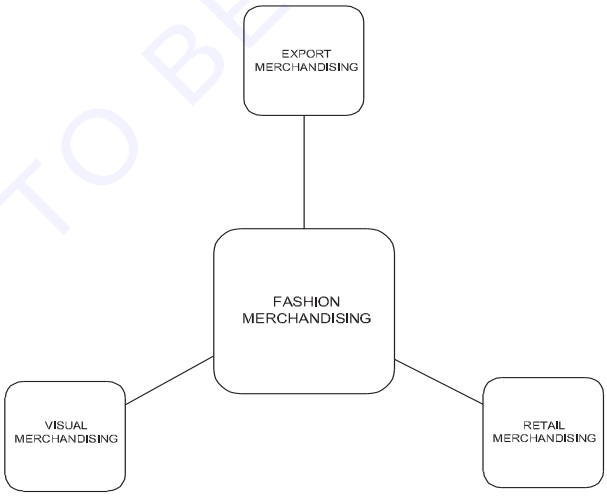

TYPES OF MERCHANDISING

- Export merchandising is a method of offering retail goods for sale in a foreign consumer market.
- Many large companies across the country maintain entire divisions devoted to finding ways to better enter foreign retail markets though export merchandising to increase profit and sustain growth.
- The globalization of business due to an increase in digital technology fueled by the internet has made expand merchandising a necessity for companies looking to expand and keep up with competitors.

© NIMI NOT TO BE REPUBLISHED

Retail merchandising

- Retail merchandising is a process that helps retailers sell their products
- Successful retail merchandising involve s selecting products that will attract customers, while pricing promoting them in ways that will encourage sales .
- Retail merchandising refers to the various activities which contribute to the sale of products to the consumers for their end use.
- Every retail store has its own line of merchandise to offer to the customers.

Visual merchandising

- Visual merchandising refers to anything that can be seen by the customer and outside a store , including displays , decorations , signs and layout of space.
- The overall purpose of visual merchandising is to get customers to come into store and spend money.
- Visual merchandising starts on the outside of the store or its exterior presentation and carries on to the interior presentation.
- It may involve the ability to create window displays in fashionable colors and patterns that make customers think the store has what they're looking for and the art of creating other types of displays or dressing mannequins.

Merchandise Management

Merchandising is the process of promoting specific products to increase sales. A business can experience an increase in consumer demand and sales if they stock preferred goods in a store and arrange them according to their categories. Understanding the importance of merchandising management can help you evaluate consumers' preferences so you can stock and display goods successfully. In this article, we define merchandising management, highlight how merchandising management works, and provide the merchandising hierarchy.

Key roles of a Merchandising Management

It can be understood by 5 R's of merchandising. The 5 R's are:

1 **Right Product:** The right products have to be allocated to the stores depending on the store profile.

2 **Right Place:** The product has to be placed in the right place depending on the seasonal plan and overall strategy.

3 **Right Time:** Make sure that the products arrive at the stores at the right time for seasonal launches and to pay attention to continuous replenishments before the product sells out.

4 **Right Quantity:** Allocating and replenishing the needed quantities of the product to maximize sales without disrupting display.

5 **Right Price:** Setting the right price and markdown strategy and ensuring the plan is followed by the entire system.

Key Roles of A Merchandiser

Role of Fashion Merchandiser in Buying Agency

Fashion Merchandiser's role in buying agency is a mother of all merchandising activities. It originates as a complete support role to fashion marketing activity of a buying organisation. Fashion merchandising in buying organisation assumes the responsibilities of converting the design collections of a season into profitable products while meeting the marketing demand effectively.

Fashion Merchandising Responsibilities

The role of merchandising in the fashion industries is not simply a coordination role. The role assumes a lot of responsibilities as listed below:

a Coordinating with the designers of the buying organisation to understand the season's forecast and demand conditions

b Work with marketing team to ascertain the buying plans as per the outcome of the customer research, past sales data and demand estimation

© NIMI NOT TO BE REPUBLISHED

Buyer Merchandising **(based on the role performed in buying/sourcing offices)**
1 Coordinate with Designers to understand the fashion forecast 2 Range planning and cost budgeting (for sourcing at right cost) 3 Locating right production factories 4 Receive prototype samples for design reconciliation 5 Negotiate and confirm the production orders with the qualifying production factories 6 Confirm Bill of Materials (BoM – of raw materials) to procure before executing the production 7 Approve the samples in pre, during and post production stages as per quality specifications 8 Ensure the timely production and delivery 9 Make the fashion products arrive on time to retail stores 10 Facilitate the retail store sales teams to present the products well and gain the profit.

c List out the range plans and product categories to buy

d Work out the cost, buying price and budget plans

e Identify the eligible production factories and evaluate whether they qualify enough to handle the orders

f Share the order enquiries and obtain the quote along with prototype samples

g Analyse the prototype samples and negotiate with the suppliers for the final supply price h. Prepare the Tech Pack and product specifications along with technical team and share with the production factories (vendors) to receive their acceptance.

Role of Merchandiser in Export House (Production Unit)

Export house is a supplier unit that carries out the purchase order received from a buying merchandiser. Export merchandiser (production merchandiser) role is largely connected with the buyer's merchandiser. It is a profit-oriented activity for an export house hence the quality of this role is very necessary. The central elements of this role are cost of production, consumption estimation of bill of materials and construction of quality fashion products to ensure on-time delivery **(a sum of Sampling, Cost, Consumption, Construction, Quality and Delivery).**

Commercial Documents: Commercials documents are consisting of product details, packing list, commercial invoice and documents related to shipping and transportations.

Regulatory documents: Regulatory documents are generated from the transactions with different government agencies that facilitate the export trade and these documents are essential for preceding the shipment of goods to buyer's destination.

Role of Merchandiser in Retail Merchandising

Skill sets and knowledge required to perform the fashion merchandising role:

Production Merchandising **(execution of buyer's order in production factories)**
1 Develop prototype for buyer's approval 2 Work out the cost of production and supply price 3 Receive comments on the samples and do the corrective actions 4 Negotiate and confirm the production orders along with the payment terms 5 Confirm Bill of Materials (BoM – of raw materials) to procure before executing the production

© NIMI NOT TO BE REPUBLISHED

1 Fashion Design and product knowledge
2 Knowledge of Seasons, Forecast, Trend analysis, Customer research findings and past sales data
3 Buying Plans and Budgeting
4 Cost, Price and Profit working methods
5 Vendor identification and development

Retail Merchandising **(Sourcing fashion products for Retail selling)**
1 Buying plan with budget approval as per past data and customer research for upcoming season's buying 2 Range and assortment plan approvals with design and marketing teams 3 Product quality assurance (specifications) and tech-pack with technical team 4 Identify right production vendors and negotiate the buying price as per the budget approval 5 Release orders to vendors 6 Arrange for quality control to receive defect free products

6 Vendors' production capacity analysis
7 Samples coordination skills

Buyers

Buyer : A buyer is an individual responsible for deciding. What to buy where to buy from, how much to buy, and what price to buy and sell .

Types of buyers

- Importer buyer
- Retail buyer

Importer buyer

As an importer, you buy products from a foreign supplier. You are their end client. You may import for your own use. For example, because you manufacture goods and need certain raw materials or half-fabricates from abroad. You can also import products to sell them on. In that case, you are an importer and reseller, or dealer. A reseller is also referred to as a distributor.

Responsibilities

1 Submit the necessary shipping data to the agent so that he can coordinate shipment collection with the provider.
2 Understand the working conditions of the Incoterm you've chosen for your international sales like the back of your hand
3 Liaise with your provider to decide who will produce the specific documentation that your merchandise may require, both at origin and destination

Retail buyer

A Retail Buyer is a professional who plans, manages, and selects goods to be sold in retail stores to ensure their own company's competitiveness with other retailers. They continually look for new products and review existing ones to ensure they're up-to-date on current trends.

Responsibilities

- Identify customer preferences and forecast consumer trends
- Evaluate supplier options according to prices, quality etc. and determine the best choices
- Discover and purchase new products and check the quality and popularity of those already on our shelves
- Negotiate terms of agreements to achieve the best deal for our company
- Ensure the timely delivery of products and compliance with the contracts of purchase
- Monitor stock levels and make plans for buying within budget
- Create reports on sales, budgets and customer satisfaction and adjust your strategies accordingly.

© NIMI NOT TO BE REPUBLISHED

LESSON 33 : Consumer Behaviour and Marketing

Objectives

At the end of this lesson you shall be able to

- consumer behavior and it's types
- marketing and management.

Introduction to consumer behavior

Consumer behavior is the actions and decisions that people or households make when they choose, buy, use, and dispose of a product or service. Many factors play a role in how consumers engage with the market.

Factors affecting consumer behavior

Consumer behavior is influenced by many external factors and internal factors which are given as below:

1 **Cultural Factors:** cultural values, beliefs, and customs of consumers.

2 **Social Factors:** the impact of social groups, family, and peers on consumers choices.

3 **Personal Factors:** individual characteristics like age, occupation, and lifestyle etc.

4 **Psychological Factors:** perceptions, motivations, and learning processes affect consumer decisions etc.

5 **Economic Factors:** economic conditions and technological trends etc.

Management Techniques

Several management techniques are employed in marketing to enhance effectiveness and achieve business objectives are given as below:

1 SWOT Analysis

2 Market Segmentation

3 Target Marketing

4 Marketing Mix (4Ps)

5 Customer Relationship Management (CRM)

6 Data Analytics

7 Innovation Management

8 Brand Management

9 Content Marketing

10 Social Media Management

11 Agile Marketing

12 Performance Metrics

Leadership

In marketing, leadership involves guiding and inspiring a team to effectively implement strategies, drive campaigns, and achieve business goals. It includes setting a vision, making informed decisions, and adapting to market trends to lead the brand towards success.

Importance of Leadership

Leadership is crucial in various aspects such as:

- Guidance
- Inspiration
- Decision-Making

© NIMI NOT TO BE REPUBLISHED

- Team Development
- Communication
- Adaptability
- Problem-Solving
- Organizational Culture
- Accountability
- Innovation

Authority

In marketing, authority refers to the perceived expertise and credibility that a person, brand, or source possesses in a particular industry or niche. Establishing authority is essential for building trust with the target audience and positioning oneself as a knowledgeable and reliable source. Authority can be cultivated through

The duties associated with authority in marketing involve

- Sharing Expertise
- Maintaining Consistency
- Building Reputation
- Creating Valuable Content
- Engaging with the Audience
- Seeking Endorsements
- Staying Informed
- Demonstrating Leadership

Responsibility of consumer behavior and marketing

Consumer behavior and marketing are interconnected, with consumers playing a crucial role in shaping market trends. Consumers have the responsibility to make informed and ethical choices, considering factors like sustainability and social impact. On the other hand, marketers bear the responsibility of providing accurate information, promoting transparency, and ensuring their products meet ethical standards. Both parties contribute to shaping a sustainable and ethical marketplace.

Need of social responsibility: As a part of responsible management, following are needs.

- Assessment
- Stakeholder Engagement
- Ethical Standards
- Transparency
- Environmental Sustainability
- Employee Well-being
- Community Involvement
- Product Responsibility

Functions of management

It includes planning, making decisions, motivating, leading, and carrying out different functions to achieve the goals and objectives efficiently and effectively. The functions of management are interconnected, and differentiation between them is highly subjective. Therefore, they are non-linear. (Fig 1)

Fig 1

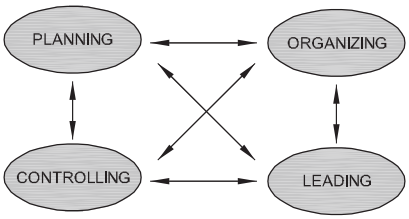

FDC22T0184

© NIMI NOT TO BE REPUBLISHED

In marketing, the functions of management play a crucial role in achieving organizational goals. These functions include

- Planning
- Organizing
- Leading
- Controlling
- Coordination

Marketing

Marketing is the activity, set of institutions, and processes for creating, communicating, delivering, and exchanging offerings that have value for customers, clients, partners, and society at large.

Importance of Marketing

Overall, marketing is essential for businesses to thrive, connect with their audience, and achieve sustainable growth. Marketing is crucial for several reasons:

- Product Visibility
- Customer Awareness
- Revenue Generation
- Competitive Edge
- Brand Building
- Market Understanding
- Communication Channel
- Economic Growth

Different types of marketing

- content marketing
- Social media marketing
- Influence marketing
- Search engine marketing
- Email marketing
- Public relations
- Print marketing
- Direct mail
- Television and Radio

Examples of Market resources

- In economics
- In marketing
- Meaning
- Allocation
- Research
- Economy
- Value
- Stock

© NIMI NOT TO BE REPUBLISHED

Resource market definition formally refers to a market that furnishes companies, firms, and organizations with the factors of production in exchange for monetary benefits. Resource markets are those which provide businesses with the resources they need to provide the goods or services they offer.

Types of market resources

There are several types of resources that are included in resource markets. They include land, labor, entrepreneurship, capital, and natural resources.

Market promotion

Promotional marketing refers to the process of sharing knowledge about a brand, product, or service through multiple marketing channels to increase brand awareness. Promotional marketing is one of the 4Ps of marketing, also called the marketing mix, which includes product, price, place, and promotion. (Fig 2)

Fig 2

PROMOTION AND PRIMOTIONAL MIX

FDC22T0185

There are seven promotional categories, namely direct marketing, sales promotion, digital marketing, personal selling, general advertising, public relations, and sponsorship. Promotional marketing can be incredibly beneficial for long-term business success marketing promotion.

Importance of marketing promotion

Promotion plays a crucial role in marketing management by creating awareness, generating interest, and influencing consumer behavior. It helps businesses achieve their objectives by attracting customers and building a strong brand.

Branding

Branding is about making consumers feel good about supporting a company and establishing an emotional connection. Those that brand effectively create a lasting impression that helps grow advocacy and loyalty among customers for the long term.

Importance of Branding

It gives your organization an identity, encourages consumers to buy from you, supports your marketing and advertising, and brings your employees pride. People recognize a company by its brand name, logo, slogan as well as colors. Examples - Apple, Coca Cola etc.

Four steps of Branding

Step 1 – Understand your company.

Step 2 – Learn your audience.

Step 3 – Select your brand message and positioning.

Step 4 – Track brand growth.

Pricing

Pricing can be defined as the value customers pay to benefit from receiving and using a good or service. Price is, therefore, the element of the marketing mix that leads to revenues, unlike the other elements which incur costs. Pricing is a process of fixing the value that a manufacturer will receive in the exchange of services and goods.

Types of pricing

The pricing method is divided into two parts

© NIMI NOT TO BE REPUBLISHED

1 **Cost Oriented Pricing Method:** It is the base for evaluating the price of the finished goods, and most of the company applies this method to calculate the cost of the product. This method is divided further into the following ways.

2 **Market-Oriented Pricing Method:** Under this category, the is determined on the base of market research.

Planning and development

Development Planning is the creation of measurable goals to support an employee's career. This includes defining how to achieve a goal and the time frame within which this should be done. Managers work with employees to document both their career goals and their personal goals.

The Development Planning Process plays a crucial role for both staff members and the organizations they work for. It has following benefits:

I Up skills Workforce

II Increases Productivity

III Improves Employee Satisfaction

IV Increases Employee Retention

V Enriches Company Culture

VI Strengthens Feedback Culture

Advertisement media and effectiveness

An effective advertising campaign can increase sales, attract new customers, and enhance brand perception. Advertising media is the type of media used to promote a product, service, or concept via an advertisement. Advertising media is an umbrella term referring to a mixture of all types of media, including the internet, TV, radio, magazines, newspapers, and billboards etc.

Types of advertising media:

- Print Media
- TV Advertising Media
- Social/Online Media
- Radio Media
- Outdoor Media

Marketing-Mix

Marketing-mix is a combination of four elements product, pricing structure, distribution system, and promotional activities used to satisfy the needs of an organizations target market and, at the same time, achieve its marketing objectives. (Fig 3)

Fig 3

FDC22T0186

Nature of Marketing-Mix (Components)

Determining the Marketing-Mix

The purpose of determining the marketing-mix is to satisfy the needs and wants of the customers in the most effective and economical manner. Steps involved in the process of determining the marketing-mix are as below:

1 Identification

2 Analysis

© NIMI NOT TO BE REPUBLISHED

3 Design

4 Testing

5 Adoption

Pricing Policy

Price of a product or service often plays a significant role in that product's or service's success. Through systematic pricing policies and strategies, companies can reap greater profits and increase or defend their market shares. Setting prices is one of the principal tasks of marketing and finance managers.

Types of Pricing

1 Value-Based Pricing

2 Demand-Based Pricing

3 Competition Based Pricing

Sales forecasting

A sales forecast is an estimate of expected sales revenue within a specific time frame, such as quarterly monthly, or yearly. It expresses how much a company plans to sell. Forecasters analyze economic conditions, consumer trends, past purchases, and competitors to make accurate predictions. This helps the business plan, allocate resources, and identify opportunities and sales forecasting process.

Three main sales forecasting methods

1 Use of historical data to forecast future results- Looking at historical data is perhaps the most common as well as most straightforward approach.

2 Funnel-based forecasting- For many companies, the current state of the sales funnel is viewed as the most accurate predictor of likely sales outcomes.

3 Forecasting based on multiple variables- Based on other various factors other than the above two methods.

Sales Promotion and Salesman Ship

Sales promotion: A sales promotion is a marketing strategy in which a business uses a temporary campaign or offer to increase interest or demand in its product or service.

Types of sales promotion

1 Competitions and challenges

2 Product bundles

3 Flash sales

4 Free trials

5 Free shipping

6 Free products

7 Early bird or first purchaser specials

8 BOGO Sales (BOGO - "buy one, get one free" promotions)

9 Coupons and vouchers

10 Subscriptions

Benefits of sales promotion

- Creating new leads
- Introducing a new product
- Selling out overstock
- Rewarding current customers
- Increasing revenue

© NIMI NOT TO BE REPUBLISHED

- Sales promotion example

Sales promotion strategies : These are as shown in Fig 4

Fig 4

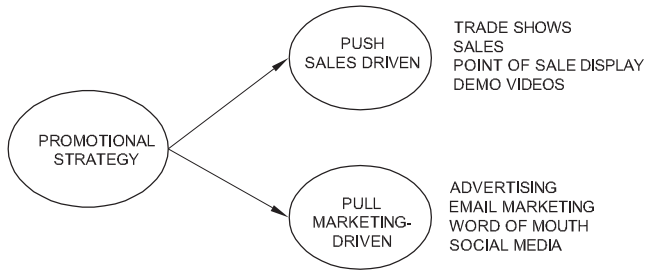

After sales service

It means providing relevant support services to the customer after purchasing the product. It may be related to use of products, repair and maintenance etc. Customer gets satisfaction by a good after sales service and associates with the concerned product for future also.

Types of After-Sale Services

1 Preinstallation Services

It is provided in the form of manual or tags containing information about usage of product.

2 Online Support Sale Service

It is mostly provided by ecommerce companies.

3 Upgrades sale service

This post sale service is often provided by electronic or software companies. The upgrades provided by the software companies for a limited time is a classic example.

Complaints and their Redressal

Complaints are made when customer is not satisfied with the quality of product. Therefore, complaints should be addressed as soon as possible. Necessary mending, repair and maintenance or replacement should be provide to customer as possible.

Problem solving and decision making

Problem solving means to solve the problems arising at the different states from design to sales including after sales services. Decision-making is the process of choosing a solution based on your judgment, situation, facts, knowledge or a combination of available data.

Key Steps of Problem Solving

Step 1: Define the Problem

Step 2: Analyze The Problem.

Step 3: Develop Potential Solutions.

Step 4: Evaluate The Options.

Step 5: Select The Best Option.

Step 6: Implement The Solution.

Step 7: Measure The Results.

Benefits of the Good Decision-making

- Clarity
- Efficiency
- Accountability
- Risk Mitigation

© NIMI NOT TO BE REPUBLISHED

LESSON 34 - 39 : Quality of production

Objectives

At the end of this lesson, you shall be able to

- about quality control
- production method
- imp of keeping standard
- factors responsible for deviation
- ISO 9000 to 9006
- total Quality Management.

Definition of Quality

Quality means customer needs is to be satisfied. Quality is defined as the level of acceptance of a good or service. It is a very essential requirement for any kind of product. Every product should maintain the standard quality levelTo attain the quality of the garment a proper practice should be followed right from the initial stage of sourcing raw materials to the stage of final finished garment.

Quality control

Quality control is the process of maintaining given standards in the product, from the design phase to the consumer's use of product for a given life with given condition. Quality control is a set of steps or guidelines designed to guarantee that a product or service meets certain performance standards. The goal of quality control is to ensure that an item meets the needs and specifications of the consumer population. Quality control means the recognition and removal of identifiable causes and defects, and variables from the set standards".

7 Basic Tools of Quality Control

1 Check sheets
2 Control chart
3 Histogram
4 Pareto chart
5 Scatter diagram
6 Flow chart
7 Cause and effect diagram

1 **Check sheet:** is a form used to collect data in real time at the location where the data are generated. The data it captures can be quantitative or qualitative. When the information is quantitative, the check sheet is sometimes called a tally sheet.(Fig.1)

Fig 1

Defect Types? Event occurrence	Events							Total
	Sun	Mon	Tue	Wed	Thur	Fri	Sat	
Supplied parts rusted		✓✓✓ ✓✓✓ ✓✓	✓✓✓✓ ✓	✓✓✓✓	✓✓			19
Misaligned Weld			✓✓✓			✓✓		5
Improper Test Procedure		✓		✓✓				3
Wrong Part Issued					✓✓			2
Film on Parts				✓✓✓✓		✓✓		6
Voids in Casting								0
Incorrect Dimensions								0
Adhesive Failure					✓			1
Masking Insufficient								0
Spray Failure				✓✓✓✓				4
Total		9	8	14	5	4	0	40

© NIMI NOT TO BE REPUBLISHED

2 **Control chart:** also known as Shewhart charts or process- behavior charts, in statistical process control are tools used to determine if a manufacturing or business process is in a state of statistical control.(Fig 2)

Fig 2

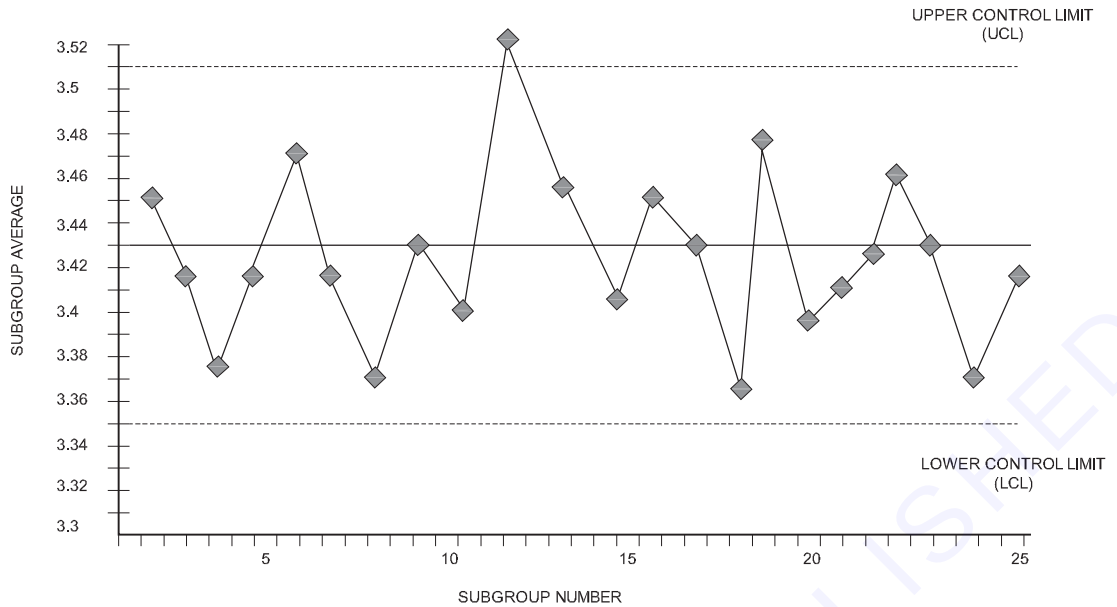

3 **Histogram:** is a graphical representation showing a visual impression of the distribution of data.(Fig 3)

Fig 3

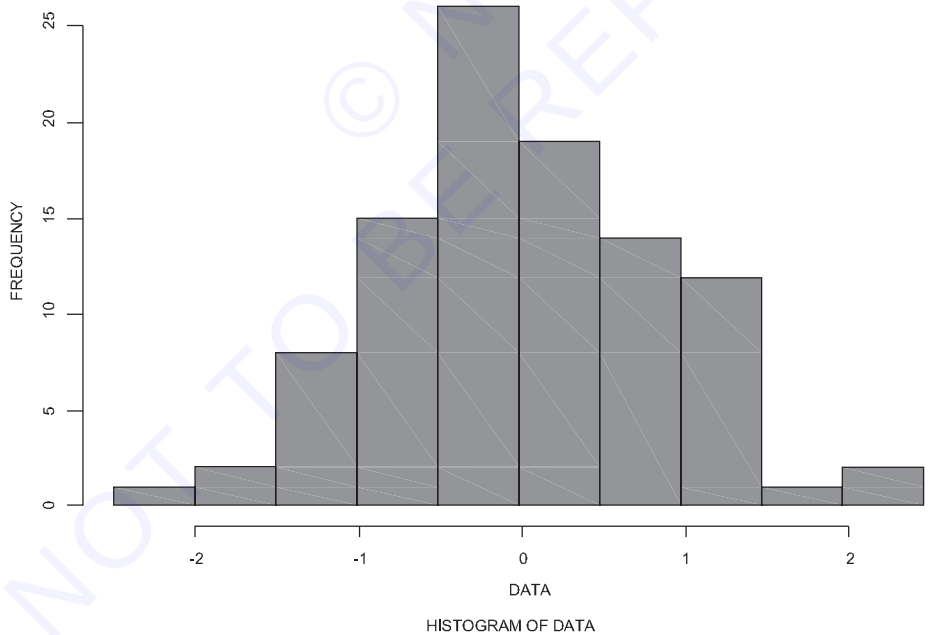

4 **Pareto Chart-** is a type of chart that contains both bars and a line graph, where individual values are represented in descending order by bars, and the cumulative total is represented by the line.(Fig 4)

5 **Scatter diagram:** is a type of mathematical diagram using Cartesian coordinates to display values for two variables for a set of data.(Fig 5)

6 **Flow chart:** is a type of diagram that represents an algorithm or process, showing the steps as boxes of variation.(Fig 6)

7 **Causes and effect diagram**: (Ishikawa or Fishbone Diagram): Identifies potential causes of a problem.(Fig 7)

© NIMI NOT TO BE REPUBLISHED

Fig 4

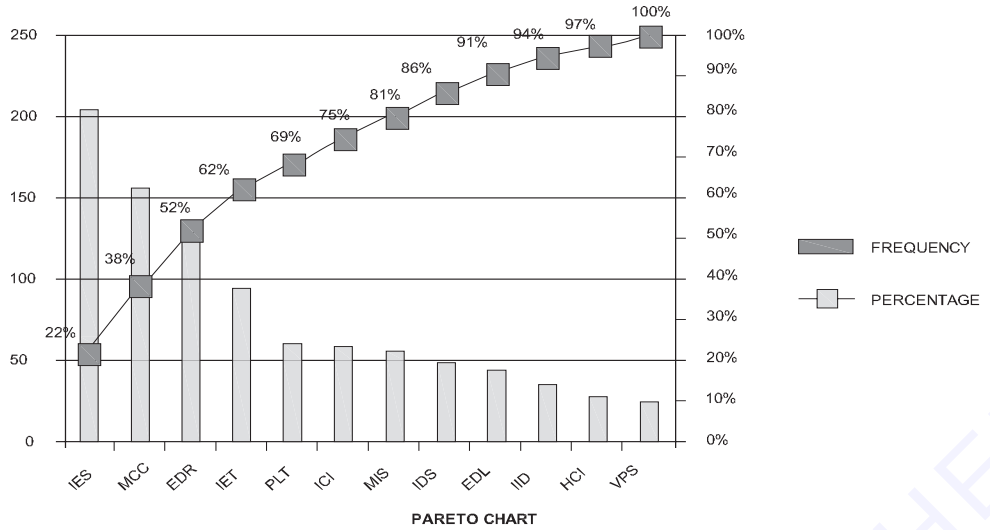

PARETO CHART

FDC22T0190

Fig 5

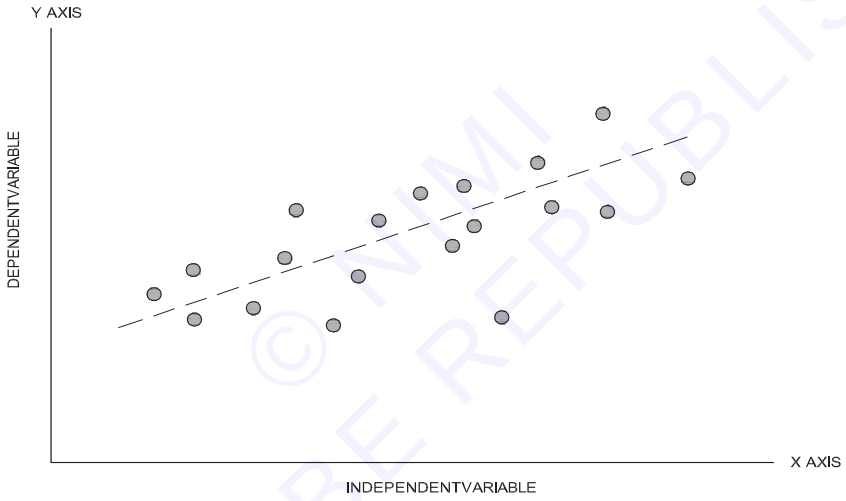

SCATTER DIAGRAM

FDC22T0191

Fig 6

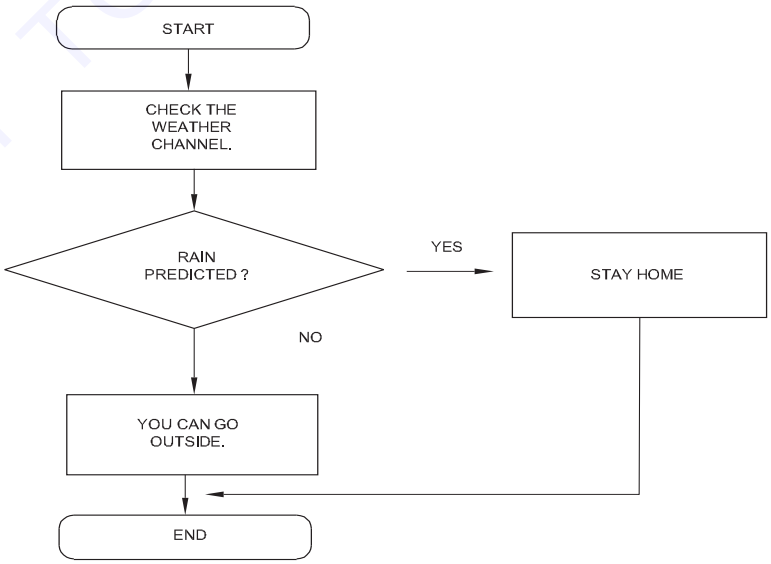

FDC22T0192

NOT TO BE REPUBLISHED © NIMI

Fig 7

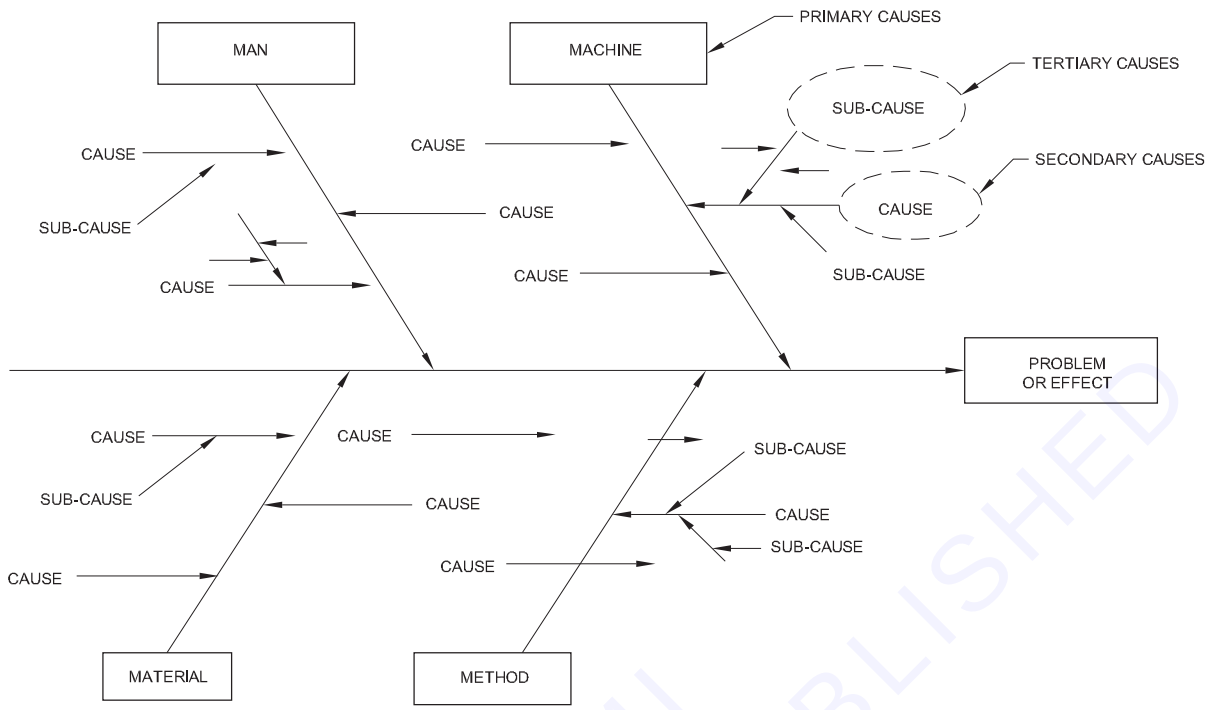

CAUSE AND EFFECT DIAGRAM

Production methods

Quality control in the garment industry involves rigorous inspection of raw materials, monitoring production processes, and assessing finished products. Methods include visual inspections, measurements, and testing for durability and compliance with standards. Implementing effective quality management systems, like ISO 9001, helps ensure consistency.Production methods in the garment industry vary but commonly include pattern making, cutting, sewing, and finishing. Automation, such as computerized cutting machines, is increasingly used for efficiency. Lean manufacturing principles, like 5S methodology, are applied to streamline processes, reduce waste, and enhance overall productivity. Regular training and communication within the production team are vital for maintaining high-quality standards.

Methods of Quality Control:

Piece goods quality control: On receipt of fabrics in the ware house, at least 10% are inspection as per “4 Points” system/10 Points system/2.5 Point system/6.0 Point system. The most commonly used 4 Points system as per below –

Penalty points for various defects:

- 3 Inches or less is equal to 1 Point
- Over 3, under 6 Inches is equal to 2 Point
- Over 6, under 9 Inches is equal to 3 Point
- Over 9 Inches is equal to 4 Point
- A maximum of 4 points are changed in one linear yard.

Quality control in Cutting section:

In cutting section quality is ensured in two stages.

a Spreading quality control: Following the point are checked during

- spreading
- Table marking.
- Ends positioning
- Tension

NOT TO BE REPUBLISHED NIMI

- Narrow Goods
- Ply height
- Remnants
- Marker placing

b After cutting quality control: After each cutting blocks and bundles are checks on the following points.

- Miss cut
- Ragged cutting
- Pattern checks
- Matching Plies
- Notches

In process quality control (Sewing)

During the swing "In process quality control" is done by the line QC's through 7 pcs inspection system.For critical operations 100% process inspection are carried out. The following parameters are also checked in sewing process

a Machine check.

b Tension.

c SPI checks

d Needle check.

e Cleanness.

d Table inspection.

f Inspection before wash.

Quality control in washing section:

a Garments handling

b Wash standard.

c After wash thoroughly inspection.

Quality control in finishing sections:

Following inspection/audit is done to attain AQL (1.5/2.5/4.0 etc).

a **Process inspection:** Garments are checked process wise in the finishing section to identify defects and pass only the passed garments.

b **Two hourly audit:** Every after two-hours audit is done on finishing lot to attain AQL the required AQL.

c **Days final audit:** At the end of the day accumulated lot of finished garments are statistically audited to attain required AQL.

d **Lot final audit:** On completion of packing of one complete lot of garment, QA manager conduct statistical audit based on required AQL garments. Garments are offered for final inspection by buyer /clients for shipment only when these are through in this audit.

The following parameters are also checked in sewing process

a After wash garments must be keep in the box /table covering.

b Thread sucking.

c Iron inspection.

d Measurements inspection.

e Poly inspection of top of garments.

f Inspection before cartooning.

© NIMI NOT TO BE REPUBLISHED

Importance of keeping standard

Quality control is vital in the garment industry to ensure consistency, reliability, and customer satisfaction. By adhering to standards, manufacturers can minimize defects, maintain product integrity, and uphold brand reputation. Consistent quality also fosters trust among consumers, leading to repeat business and positive word-of-mouth marketing. Additionally, stringent quality control measures help identify and rectify issues early in the production process, reducing wastage and maximizing efficiency.

Maintaining standards is crucial for consistency, quality, and efficiency across various fields. Standards ensure reliability, interoperability, and safety, fostering trust among stakeholders and promoting innovation while minimizing risks.

Factors responsible for deviation

Deviations from standards can result from factors such as inadequate training, poor communication, equipment malfunction, changing requirements, or external influences. Identifying and addressing these factors is essential to maintain adherence to established standards.

ISO And ISO 9000 to 9006

Introduction

ISO stands for "International Standards Organization" .The source of ISO 9000 and more than 13,000 international standards for business government and society . A network of national standards institutes from 140 countries working in partnership with international organizations governments industry business and consumer representatives. A bridge between public and private sectors.

ISO 9000 to ISO 9006 doesn't represent individual standards within the ISO 9000 series. However, the ISO 9000 series does include standards relevant to quality control in the garment industry, primarily focusing on quality management systems. Here's a brief overview:

1. **ISO 9000:** Provides an overview of the concepts and principles of quality management systems,including terminology and fundamentals.
2. **ISO 9001:** Sets out the criteria for a quality management system and is the only standard in the ISO 9000 series that can be certified. It focuses on meeting customer requirements, continuous improvement, and ensuring consistent quality in products and services.
3. **ISO 9004:** Provides guidelines for organizations seeking to improve their overall performance. It offers broader guidance on quality management principles and practices beyond the requirements of ISO 9001.
4. **ISO 9006:** This standard does not exist in the ISO 9000 series. It's possible that you may be referring to ISO 9006-1:1990, which was part of the ISO 9000 series but has since been withdrawn.

In the garment industry, ISO 9001 is commonly utilized to establish and maintain effective quality management systems, ensuring that products meet customer expectations, regulatory requirements, and industry standards. It covers aspects such as quality control, process management, documentation, and continuous improvement.

Total quality management

Objectives: At the end of this lesson, you shall be able to

- total quality management
- 5-S in total quality management
- the key elements of the TQM.

Total Quality Management (TQM): It is one of the latest concepts of management that can ensure the highest standard of quality and productivity ensuring good for all of the workers, management and society. In this system, quality of management and actions are ensured by assuring quality at all stages from vision, planning, purchase, store, cutting, sewing, inspection, packing, administration, welfare, personnel motivation etc.The process to produce a perfect product by a series of measures require an organized effort by the entire company to prevent or eliminate errors at every stage in production is called total quality management.

© NIMI NOT TO BE REPUBLISHED

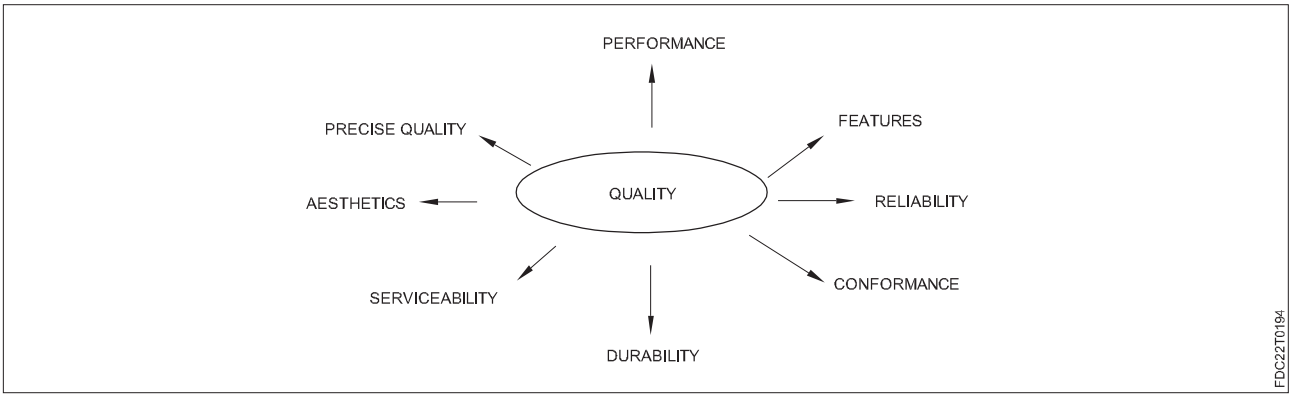

Dimensions of Quality

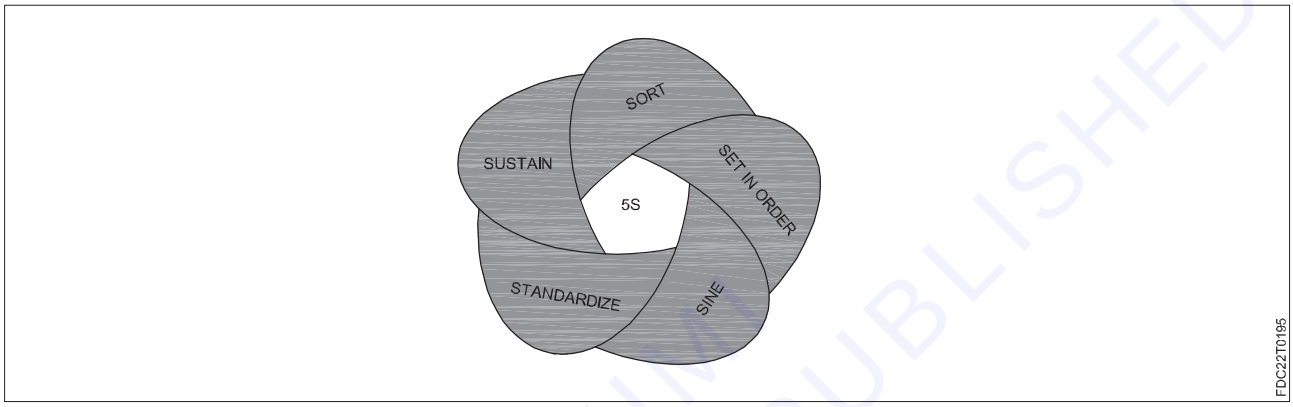

5s in total quality management

The five main principles of 5S are Sort, Set in order, Shine, Standardize, and Sustain. With the implementation of these five principles, any kind of wastage, inefficiency, and unsafe conditions are brought to knowledge, which can then be dealt with

- **Sort:** This includes identifying all the necessary items in the workplace, and removing all the unnecessary ones.
- **Set in order:** Once the necessary items are identified, they are labeled, colour coded, and well organized in the right places.
- **Shine:** This process involves the cleaning up of the workplace thoroughly.
- **Standardize:** This step makes sure that all the team members are trained on the above three steps and know how to perform them with consistency.
- **Sustain:** Here, a monitoring system is set up to observe that the organized and standardized workplace is being continually maintained.

The key elements of the TQM

Total Quality Management (TQM) is a management approach that focuses on continuously improving the quality of products and processes within an organization. In the apparel industry, TQM plays a crucial role in ensuring that the products meet customer expectations and industry standards. Here are some key aspects of TQM in the apparel industry

1 Focus on the customer.

2 Employee Involvement

3 Process Management:

4 Continuous improvement

5 Supplier Relationships

6 Quality Control and Inspection

NOT TO BE REPUBLISHED © NIMI

7 Training and Education

1 Focus on the customer

- It is important to identify the organization's customers.
- External customers consume the organization's productor service.
- Internal customers are employees who receive the output of other employees.

2 Employee Involvement

Since the quality is considered the job of all employees, Front line employees are likely to have the closest contact with external customers and thus can make the most valuable contribution to quality.Therefore, employees must have the authority to innovate and improve quality.

3 Process Management

TQM emphasizes the need to define and document processes in the apparel industry. This includes everything from design and sourcing of materials to manufacturing and quality control. By standardizing processes and monitoring their performance, organizations can identify and rectify deviations from quality standards.

4 Continuous improvement

TQM promotes a culture of continuous improvement. This involves identifying and addressing quality issues, defects, and inefficiencies in the production process. Continuous improvement helps in reducing waste, enhancing product quality, and increasing efficiency.

5 Supplier Relationships

The apparel industry relies heavily on suppliers for raw materials and components. Building strong relationships with reliable suppliers is essential for TQM. Suppliers must meet quality standards and deadlines, and their performance should be continuously monitored and improved.

6 Quality Control and Inspection

Quality control and inspection processes are integral to TQM in the apparel industry. These processes ensure that products meet quality standards and are free from defects. Inspections are carried out at various stages of production to catch and rectify issues early.

7 Training and Education

TQM encourages continuous training and education for employees to enhance their skills and knowledge. This helps them better understand quality standards, improve their work, and adapt to changes in the industry.

© NIMI NOT TO BE REPUBLISHED

Module 9: Digital portfolio

LESSON 40 : Introduction to Digital Portfolio

Objectives

At the end of this lesson, you shall be able to

- introduction about Portfolio
- types of Portfolio
- differences between physical & digital portfolio
- how to make digital portfolio.

Introduction

A Collection of any related work in a single place / position in on arranged manner is called Portfolio .Allocation or assignment of a particular charge or work is also called portfolio. It is a collection of items that demonstrate your skills, qualifications, education and experience.

Types of portfolio

1 **Electronic/Digital Portfolio:**

When this is concerned, it provide a made resource for everyone to find out required action of necessary outcomes over time, make connections among contrasting elements of the programme, gain. It is portable and can be sent easily via email, which is particularly nice if one is applying out of state. It is best way to show the Adobe Illustrator or Photoshop skills. But the limitation of this is that it can be easily copied.

2 **Physical / Hard/ Portfolio:**

Those Portfolios which are made manually is known as hand-made portfolio. It specifies the arts and crafts of fashion design. It can clasp real materials, color swatches, notions like buttons, zippers, and beads. This are sometimes, hard to preserve. These portfolios require proper lookout; as a result of they can bear several hand.

3 **Personal Portfolio:**

Personal portfolio is something that, one take to an interview. It includes collections one has made during the time as a designer and show the skills one have perfected. Simply, one may specialize in one category, for example knitwear, which means the personal portfolio will express this category. Or if one have experience in a range of design and trend areas this should be exhibited throughout.

4 **Specific Portfolio:**

During placement procedure, when a recruiter or company asks to share after an initial discussion about a role, then it is called as specific portfolio. This portfolio is helpful to secure a job in interview. One required showcasing the best collections that reflect the type of role going for. For example, if the position is for T-shirt, then the specific portfolio will show very best T-shirt design work.

Differences between physical & digital portfolio	
Physical portfolio	**Digital portfolio**
Can be seen and touched.	Can be seen only .
Material /work is actual form	Material /work in image, photograph from.
Difficult to store for longer time (less life)	Easy to Store (Longer life)
Physical space required .	Easy to carry (eg. pendrive, cd, email etc.) in ritual space

© NIMI NOT TO BE REPUBLISHED

More time required.	Easy to store for longer time (long life)
Modification is difficult .	Easy to modify.
Less effective presentation for group .	More effective presentation for group (projector)
It has to be carried manually from one place to another .	It can be shared by e-mail easily or any weblink easily.

How to make digital portfolio

1 Shortlist and compile the design work.

2 Organise the content of design work as per the category/theme.

3 Include technical drawings- Add technical drawings or flats to your portfolio that display your understanding of garment construction, and attention to detail. These drawings provide a clear visual representation of your designs and how they may look when you construct them. For example, include front and back views of a garment with detailed annotations of seams, fabric choices and closures. You can create the technical drawings using softwares like Adobe Illustrator, CorelDraw, Fashion Studio etc. and edit the images using Adobe Photoshop. You can digitize your manual technical drawings by scanning the previously drawn images in any format such as jpeg, png etc.

4 Show your design process - Demonstrate your creative process by including mood boards, fabric swatches and inspiration images. This content helps understand how you develop your ideas and provides insight into your thought process. For example, showcase a mood board featuring images that inspired a particular collection, followed by fabric samples and final designs.

5 Use high quality photographs or scanned images.

6 Use your own distinctive style of presentation.

© NIMI NOT TO BE REPUBLISHED