DRIVER CUM MECHANIC (LMV)

NSQF LEVEL - 3

TRADE PRACTICAL

SECTOR: AUTOMOTIVE

(As per revised syllabus July 2022 - 1200Hrs)

© NIMI NOT TO BE REPUBLISHED

Directorate General of Training

DIRECTORATE GENERAL OF TRAINING
MINISTRY OF SKILL DEVELOPMENT & ENTREPRENEURSHIP
GOVERNMENT OF INDIA

NATIONAL INSTRUCTIONAL MEDIA INSTITUTE, CHENNAI

Post Box No. 3142, CTI Campus, Guindy, Chennai - 600 032

Sector : Automotive

Duration : 6 Months

Trade : Driver Cum Mechanic (LMV) - Trade Practical - NSQF Level - 3 (Revised 2022)

Developed & Printed by

National Instructional Media Institute
Post Box No.3142
Guindy, Chennai - 600032
INDIA
Email: chennai-nimi@nic.in
Website: www.nimi.gov.in

Copyright © 2023 National Instructional Media Institute, Chennai

First Edition : May 2024 Copies : 1000

Rs.215/-

All rights reserved.

No part of this publication can be reproduced or transmitted in any form or by any means, electronic or mechanical, including photocopy, recording or any information storage and retrieval system, without permission in writing from the National Instructional Media Institute, Chennai.

© NIMI NOT TO BE REPUBLISHED

FOREWORD

The Government of India has set an ambitious target of imparting skills to 30 crores people, one out of every four Indians, to help them secure jobs as part of the National Skills Development Policy. Industrial Training Institutes (ITIs) play a vital role in this process especially in terms of providing skilled manpower. Keeping this in mind, and for providing the current industry relevant skill training to Trainees, ITI syllabus has been recently updated with the help of Media Development Committee members of various stakeholders viz. Industries, Entrepreneurs, Academicians and representatives from ITIs.

The National Instructional Media Institute (NIMI), Chennai, has now come up with instructional material to suit the revised curriculum for **Driver Cum Mechanic (LMV) - Trade Practical** in **Automotive Sector** under **Yearly Pattern.** The NSQF Level - 3 (Revised 2022) Trade Practical will help the trainees to get an international equivalency standard where their skill proficiency and competency will be duly recognized across the globe and this will also increase the scope of recognition of prior learning. NSQF Level - 3 (Revised 2022) trainees will also get the opportunities to promote life long learning and skill development. I have no doubt that with NSQF Level - 3 (Revised 2022) the trainers and trainees of ITIs, and all stakeholders will derive maximum benefits from these Instructional Media Packages IMPs and that NIMI's effort will go a long way in improving the quality of Vocational training in the country.

The Director General, Executive Director & Staff of NIMI and members of Media Development Committee deserve appreciation for their contribution in bringing out this publication.

Jai Hind

ATUL KUMAR TIWARI, *I.A.S*
Secretary
Ministry of Skill Development & Entrepreneurship,
Government of India.

May 2024
New Delhi - 110 001

© NIMI NOT TO BE REPUBLISHED

PREFACE

The National Instructional Media Institute (NIMI) was established in 1986 at Chennai by then Directorate General of Employment and Training (D.G.E & T), Ministry of Labour and Employment, (now under Ministry of Skill Development and Entrepreneurship) Government of India, with technical assistance from the Govt. of the Federal Republic of Germany. The prime objective of this institute is to develop and provide instructional materials for various trades as per the prescribed syllabus under the Craftsman and Apprenticeship Training Schemes.

The instructional materials are created keeping in mind, the main objective of Vocational Training under NCVT/NAC in India, which is to help an individual to master skills to do a job. The instructional materials are generated in the form of Instructional Media Packages (IMPs). An IMP consists of Theory book, Practical book, Test and Assignment book, Instructor Guide, Audio Visual Aid (Wall charts and Transparencies) and other support materials.

The trade practical book consists of series of exercises to be completed by the trainees in the workshop. These exercises are designed to ensure that all the skills in the prescribed syllabus are covered. The trade theory book provides related theoretical knowledge required to enable the trainee to do a job. The test and assignments will enable the instructor to give assignments for the evaluation of the performance of a trainee. The wall charts and transparencies are unique, as they not only help the instructor to effectively present a topic but also help him to assess the trainee's understanding. The instructor guide enables the instructor to plan his schedule of instruction, plan the raw material requirements, day to day lessons and demonstrations.

In order to perform the skills in a productive manner instructional videos are embedded in QR code of the exercise in this instructional material so as to integrate the skill learning with the procedural practical steps given in the exercise. The instructional videos will improve the quality of standard on practical training and will motivate the trainees to focus and perform the skill seamlessly.

IMPs also deals with the complex skills required to be developed for effective team work. Necessary care has also been taken to include important skill areas of allied trades as prescribed in the syllabus.

The availability of a complete Instructional Media Package in an institute helps both the trainer and management to impart effective training.

The IMPs are the outcome of collective efforts of the staff members of NIMI and the members of the Media Development Committees specially drawn from Public and Private sector industries, various training institutes under the Directorate General of Training (DGT), Government and Private ITIs.

NIMI would like to take this opportunity to convey sincere thanks to the Directors of Employment & Training of various State Governments, Training Departments of Industries both in the Public and Private sectors, Officers of DGT and DGT field institutes, proof readers, individual media developers and coordinators, but for whose active support NIMI would not have been able to bring out this materials.

Chennai - 600 032 **EXECUTIVE DIRECTOR**

© NIMI NOT TO BE REPUBLISHED

ACKNOWLEDGEMENT

National Instructional Media Institute (NIMI) sincerely acknowledges with thanks for the co-operation and contribution extended by the following Media Developers and their sponsoring organisations to bring out this Instructional Material **(Trade Practical)** for the trade of **Driver Cum Mechanic (LMV) NSQF Level -3 (Revised 2022)** under **Automotive** Sector for ITIs.

MEDIA DEVELOPMENT COMMITTEE MEMBERS

Shri. A. Thangavelu	-	Asst. Training officer (Retd.) Govt ITI, Guindy, Tamil nadu.

NIMI CO-ORDINATORS

Shri.Nirmalya Nath	-	Deputy Director of Training, NIMI- Chennai - 32.
Shri. V. Gopalakrishnan	-	Manager, NMI, Chennai - 32

NIMI records its appreciation of the Data Entry, CAD, DTP Operators for their excellent and devoted services in the process of development of this Instructional Material.

NIMI also acknowledges with thanks, the invaluable efforts rendered by all other staff who have contributed for the development of this Instructional Material.

NIMI is grateful to all others who have directly or indirectly helped in developing this IMP.

© NIMI NOT TO BE REPUBLISHED

INTRODUCTION

TRADE PRACTICAL

The trade practical manual is intended to be used in practical workshop. It consists of a series of practical exercises to be completed by the trainees during the course. These exercises are designed to ensure that all the skills in compliance with NSQF Level - 3 (Revised 2022) syllabus are covered.

The manual is divided into Seven modules

Module 1	**General Safety Precaution and Driving Regulations**
Module 2	**Automobile Engines and Vehicle Controls**
Module 3	**Simulator Driving and Vehicle Pre-driving Checks**
Module 4	**Traffic Regulations and Vehicle Mechanism**
Module 5	**Vehicle Electrical System**
Module 6	**Tyre Repair and Inspection**
Module 7	**Vehicle Maintenance and Driver's Personal Management System**

The skill training in the shop floor is planned through a series of practical exercises centered around some practical project. However, there are few instances where the individual exercise does not form a part of project.

While developing the practical manual, a sincere effort was made to prepare each exercise which will be easy to understand and carry out even by below average trainee. However the development team accept that there is a scope for further improvement. NIMI looks forward to the suggestions from the experienced training faculty for improving the manual.

TRADE THEORY

The manual of trade theory consists of theoretical information for the Course of the **Driver Cum Mechanic (LMV) NSQF Level - 3 (Revised 2022)** in **Automotive**. The contents are sequenced according to the practical exercise contained in NSQF Level - 3 (Revised 2022) syllabus on Trade Theory attempt has been made to relate the theoretical aspects with the skill covered in each exercise to the extent possible. This correlation is maintained to help the trainees to develop the perceptional capabilities for performing the skills.

The trade theory has to be taught and learnt along with the corresponding exercise contained in the manual on trade practical. The indications about the corresponding practical exercises are given in every sheet of this manual.

It will be preferable to teach/learn trade theory connected to each exercise at least one class before performing the related skills in the shop floor. The trade theory is to be treated as an integrated part of each exercise.

The material is not for the purpose of self-learning and should be considered as supplementary to class room instruction.

© NIMI NOT TO BE REPUBLISHED

CONTENTS

Exercise No.	Title of the Exercise	Learning Outcome	Page No.
	Module 1 : General Safety Precaution and Driving Regulations		
1.1.01	Practice to identify the tools and machineries used in the trade		1
1.1.02	Practice to occupational safety and environment guide lines		4
1.1.03	Practice on first aid and fire safety	1	6
1.1.04	Practice on preventing the electrical accidents and steps to be taken in such accidents		14
1.1.05	Practice to use the fire extinguishers		16
1.1.06	Practice on arrange to obtain learner licence from concern RTO		19
	Module 2 : Automobile Engines and Vehicle Controls		
1.2.07	Practice to indentify the various vehicle parts		23
1.2.08	Practice to indentify the various gauges and tell tale lamps in the dash board	1	25
1.2.09	Practice to indentify and use the different types of electrical switches		27
	Module 3 : Simulator Driving and Vehicle Pre-driving Checks		
1.3.10	Practice on simulator driving practice		28
1.3.11	Practice on initial freeway driving		30
1.3.12	Practice on vehicle pre-driving checks		32
1.3.13	Practice to check the document pertains to the driver and vehicle		34
1.3.14	Practice to adjust the driver seat and rear view mirror		35
1.3.15	Practice to start the vehicle		37
1.3.16	Practice to check the air leaks of tyres in between the vehicle journey		38
1.3.17	Practice to parking the vehicle with safety checks		39
1.3.18	Perform clutch practice on the driving vehicle	2	40
1.3.19	Perform steering practice to develop judgement for vehicle driving		41
1.3.20	Perform gear select and shifting practice on running vehicle		45
1.3.21	Practice to apply brake in level ground, slope and stopping the vehicle		46
1.3.22	Practice to drive the vehicle on the road		48
1.3.23	Practice to overtaking a vehicle on the road		50
1.3.24	Practice to overtaking a stationary and moving vehicles from left and right side		52
1.3.25	Practice on vehicle 3 point turn 5 point turn and 'U' turn		55
1.3.26	Practice on following driving vehicle distance		59
1.3.27	Practice on reverse the vehicle in different direction		61
1.3.28	Practice on vehicle parking in different directions		64
1.3.29	Practice on vehicle night driving		69

© NIMI NOT TO BE REPUBLISHED

Exercise No.	Title of the Exercise	Learning Outcome	Page No.
1.3.30	Practice to driving a vehicle according to different road lanes		71
1.3.31	Practice on village road and highway driving		75
1.3.32	Practice on vehicle driving in crowded street		78
1.3.33	Practice to perform cross country driving		80
1.3.34	Practice on vehicle hill driving by using four wheel drive		82
1.3.35	Practice to towing a vehicle		87
1.3.36	Practice to stopping the vehicle by using hand brake		89
1.3.37	Practice on simulator driving with simulation of extreme condition		91
	Module 4 : Traffic Regulations and Vehicle Mechanism		
1.4.38	Practice on drive a vehicle in various road as per road rules and regulations		93
1.4.39	Practice to use the hand signal of a driver		98
1.4.40	Perform driving test at concern RTO		100
1.4.41	Practice to identify the different types of vehicle and engine components		102
1.4.42	Practice to check oil and water level in vehicle systems		105
1.4.43	Practice to replace air cleaner, filter, fuel filter and Engine oil filter	3	107
1.4.44	Practice to apply grease on vehicle greasing points		110
1.4.45	Practice to change transmission oil of a vehicle		113
1.4.46	Practice to check the master cylinder breathers and clutch pedal free play		115
1.4.47	Practice to top-up brake fluid in the master cylinder		117
1.4.48	Practice to bleeding the hydraulic brake system		118
1.4.49	Practice on vehicle brake pedal free play adjustment		119
1.4.50	Practice to check the level of power steering oil in the reservoir		120
1.4.51	Practice to grease the vehicle suspension greasing points		121
	Module 5 : Vehicle Electrical System		
1.5.52	Practice on remove and refit of fuses and bulbs		123
1.5.53	Practice to check and adjust head light high and low beams		125
1.5.54	Practice to check the combination switch of a vehicle		126
1.5.55	Practice on cleaning and top up of a lead acid battery		128
1.5.56	Practice to remove and refit the lead acid battery from the vehicle	1	129
1.5.57	Practice to check battery charging system		130
	Module 6 : Tyre Repair and Inspection		
1.6.58	Practice to remove and refit the wheel of a vehicle		132
1.6.59	Practice to measure the tyre tread wear		134
1.6.60	Practice on carry out inflating the tyre with compressed air / nitrogen gas		135
1.6.61	Practice to repair the puncture of tubeless tyre	1	136
1.6.62	Practice on tyre rotation and wheel balancing		138

© NIMI NOT TO BE REPUBLISHED

Exercise No.	Title of the Exercise	Learning Outcome	Page No.
	Module 7 : Vehicle Maintenance and Driver's Personal Management System		
1.7.63	Practice on air bleeding in a diesel vehicle and CRDI diesel fuel system		140
1.7.64	Practice to check and replace the wiper blades		142
1.7.65	Practice to check coolant reservoir tank and thermostat valve of vehicle cooling system		143
1.7.66	Practice on clean the air cleaner	1	145
1.7.67	Practice on cleaning of cooling motor		147
1.7.68	Practice on vehicle emission test and adjustment of air fuel ratio		148
1.7.69	Practice to check the air conditioner and heater unit		152
1.7.70	Practice on using the different types of vehicle jacks		155
1.7.71	Practice on using the vehicle hand tool kit		157

LEARNING / ASSESSABLE OUTCOME

On completion of this book you shall be able to

S.No	Learning Outcome	Ref. Ex.No.
1	**Comply with environment regulations and housekeeping in the workshop (5S / Kaizen) following safety precautions. ASC/N9414**	**1.1.01 - 1.1.06**
2	**Identify Vehicle Components. ASC/N9704**	**1.2.07 - 1.2.09**
3	**Drive in conformance to standard driving practices. ASC/N9704**	**1.3.10 - 1.3.37**
4	**Ensure road worthiness of the vehicle through pre-operational checks, checks in-between journey and end of the Journey. ASC/N9704)**	**1.3.10 - 1.3.37**
5	**Drive vehicle following Traffic Regulations maintaining good road conduct. ASC/N9704**	**1.4.38 - 1.4.51**
6	**Perform Daily Maintenance/Daily Inspection on Vehicle. ASC/N9704**	**1.4.38 - 1.4.51**
7	**Carry out checks of Vehicle aggregates. ASC/N9704**	**1.4.38 - 1.4.51**
8	**Check ignition circuit for proper functioning. ASC/N9704**	**1.5.52 - 1.5.57**
9	**Check wheel alignment and Perform Wheel Rotation. ASC/N9704**	**1.6.58 - 1.6.62**
10	**Carry out the general servicing of vehicle components. ASC/N9704**	**1.7.63 - 1.7.71**

© NIMI NOT TO BE REPUBLISHED

SYLLABUS

6 Months **Duration: 6 Months**

Duration	Reference Learning Outcome	Professional Skill (Trade Practical) (With indicative hour)	Professional Knowledge (Trade Theory)
Professional Skill 29 Hrs; Professional Knowledge 07 Hrs .	Comply with environment regulations and housekeeping in the workshop (5S / Kaizen) following safety precautions. ASC/ N9414	1. Importance of trade training, List of tools & Machinery used in the trade. (05 hrs) 2. Health, Safety and Environment guidelines, legislations & regulations as applicable. Disposal procedure of waste materials like cotton waste, metal chips/burrs etc. Basic safety introduction. (06 hrs) 3. Basic injury prevention, Basic first aid, Hazard identification and avoidance, safety signs for Danger, Warning, caution & personal safety message. (06 hrs) 4. Preventive measures for electrical accidents & steps to be taken in such accidents. (06 hrs) 5. Practice Use of Fire extinguishers. (06Hrs) 6. Arrange to obtain Lerner license from concern RTO .	Importance of safety and general precautions observed in the in the industry/shop floor. All necessary guidance to be provided to the new comers to become familiar with the working of Industrial Training Institute system including stores procedures. **Soft Skills: its importance and Job area after completion of training.** Introduction of First aid. Operation of electrical mains. Introduction of PPEs. Introduction to 5S concept & its application. Response to emergencies e.g.; power failure, fire, and system failure. **DRIVING THEORY:** Qualities required for a good driver: Good behaviour, Patience, Responsibility, Self Confidence, Anticipation, Concentration, Courtesy, Consideration for other Road Users, Defensive Driving, Knowledge of Road Rules and Regulations, Knowledge of Vehicle Controls, Maintenance, simple mechanism and effect of Competitiveness, Over-Confidence, impatience. Driving Regulations: Road Rule Regulations made under sec 118 of Motor Vehicle Act 1988, Hand Signals of a driver, Traffic & Road Signs, Hand signals of traffic constable and traffic wardens, Introduction to Automatic Light Signals, Introduction to Road markings, Speed regulation on city road and highways. (07 hrs.)
Professional Skill 20 Hrs; Professional Knowledge 07 Hrs	Identify Vehicle Components. ASC/ N9704	7. Perform Preliminary checking / identification of various vehicle parts / aggregates. (8 hrs) 8. Identify various gauges & Tell-tale Lamps in the instrument panel & interpretation of readings. (7 hrs) 9. Perform Identification & use of different types electrical switches. (05 hrs)	Simple introduction to Automobile Engines and their working. Location of VIN plate / Engine serial Number. Vehicle Controls and its Response: Foot Control – Accelerator, Brake, Clutch

© NIMI NOT TO BE REPUBLISHED

Duration	Reference Learning Outcome	Professional Skill (Trade Practical) (With indicative hour)	Professional Knowledge (Trade Theory)
			Hand Control – Steering Wheel, Gear Shifting Lever, Hand Brake, Switches for direction Indicators, Head Lights, Horns, Ignition Switch, Dim-Bright Switch, and Wiper switch – Speed Control etc. Other Controls – Rear View mirrors – Types- adjustments, Instrument Cluster, Description of Speedo meter/Trip meter, RPM Gauge, Oil pressure Gauge, Temp Gauge, Fuel Gauge, and Ammeter other Gauges and Dials, Tell-tale lamps, Audio warnings, Wind Screen – their purpose & Working. Adjustment of seat and knowledge on seat belts, door locks. Fuse carrier location, Fuse layout. Knowledge on Latest Information systems: On Board Diagnosis system. Intelligent transport system. Air Bags, Audio warning systems Automated Manual Transmission, Dual power mode (Power or Economy Mode). (07 hrs.)
Professional Skill 20 Hrs; Professional Knowledge 07 Hrs	Drive in conformance to standard driving practices. ASC/ N9704	10. Practice in Simulator. (10 hrs) 11. Practice Initial freeway Driving. (10 hrs)	Introduction to Driving Simulator (07 hrs.)
Professional Skill 29 Hrs; Professional Knowledge 07 Hrs .	Ensure road worthiness of the vehicle through pre-operational checks, checks in-between journey and end of the Journey. ASC/N9704	12. Perform Pre – Driving Checks: Before sitting on driver seat, After sitting on driver seat. (07 hrs) 13. Checking the document pertains to the driver and vehicle. (05 hrs) 14. Perform Adjustment of seat, Rear View mirrors and wearing seat belt. (05 hrs) 15. Carryout Vehicle Starting Practice. (05 hrs) 16. Check the leaks of tyres in between the journey. (02 hrs) 17. Ensure Main Switch off, windows, doors are closed, apply wheel chokes and complete paper work. (05 hrs)	Pre – Driving Checks: - Before sitting on driver seat, Leakage of Fuel, Oil, water, Air, Battery etc - After sitting on driver seat, Guages etc. - Checking the document pertains to the driver and vehicle. Starting: Precautions and Procedure to be followed while starting. Clutch down start Accelerator: Proper use of Accelerator. Moving: Precautions to be followed while moving. Use of first gear.(07 hrs.)

© NIMI NOT TO BE REPUBLISHED

Duration	Reference Learning Outcome	Professional Skill (Trade Practical) (With indicative hour)	Professional Knowledge (Trade Theory)
Professional Skill 132 Hrs; Professional Knowledge 36 Hrs	Drive in conformance to standard driving practices. ASC/N9704	18. Perform Clutch Practice: Biting and Balance point. (10 hrs) 19. Perform Steering practice: In basic yard - In bare land and between tyres to develop Judgment Straight, Left and Right Turn, Steering in '8' shaped bend. (10 hrs)	Use of Clutch: Correct Leg position on the Clutch pedal Biting Point, Balance Point. Steering - Holding Steering Wheel: - Push and pull method - On the move - While gear changing - While turning - While sounding Horn - While operating dash board switches - While Signaling - On emergency (05 hrs.)
		20. Perform Gear Practice: Practice Selection of gears, up shifting, down shifting. (10 hrs) 21. Brake practice: In level ground and in Slope and Braking and Stopping Practice. (10 hrs)	Gear Shifting - Up shifting, Down Shifting – Procedures. Use of Over Drive Gear. Gear shift pattern on different vehicles. Pressure point shifting method in synchromesh & AMT Vehicle. Stopping: Normal stopping, Emergency stopping, use of Engine Brake. Stopping distance= Reaction Distance +Braking Distance. (05 hrs.)
.		22. Practice Driving on the Road. (10 hrs) 23. Perform Overtaking Practice: (05 hrs) 24. Practice Overtaking stationary and Moving vehicles from Left and Right Side. (07 hrs)	Driving on the Road: Anticipation, Judgment, Positioning the Vehicle according to other Road users. Use of IPDE(Identification, Prediction, Decision, Execution) principles while Driving MSPSL(Mirror Signal Maneuver) – Routine Use of Indicators. Defensive Driving Techniques: Judgment, Anticipation, Escape route. Priority for certain Vehicles: Emergency Vehicles, Fire Engines and Ambulance.

© NIMI NOT TO BE REPUBLISHED

Duration	Reference Learning Outcome	Professional Skill (Trade Practical) (With indicative hour)	Professional Knowledge (Trade Theory)
			Overtaking: Overtaking stationary vehicle, Moving vehicle in Left and right side – IPDE principle. Traffic Education MV Act Section 118. (05 hrs.)
		25.Practice 3 Point Turn, 5 Point Turn, 'U' Turn. (5 hrs) 26.Practice on following distance. (5 hrs)	Other Maneuvers: Merging, Diverging, turning to left and Right, 3-point Turn, 5 point turn, Passing, Crossing, Cornering. Following Distance: Meaning, Distance Method, Car length Method, 2 seconds time rule method, Distance between cars while driving at Railway crossing. (05 hrs.)
		27. Perform Reverse Practice: Straight, Left, right and Reverse practice in'8' shaped bend. (5 hrs) 28.Perform Parking Practice: Angular Parking, Perpendicular parking, Parallel Parking – Forward Entry and Reverse Entry. Parking facing Uphill and Parking facing downhill. (10 hrs)	Reversing: Locating Reverse gear, Confidence, Speed control, Steering Control, Weaving in '8' shaped Bend. Parking: Parallel, Angular, Perpendicular, Parking facing uphill, Parking facing downhill. (04 hrs.)
		29.Practice Night Driving. (5 hrs) 30. Practice Driving According to Lanes: Single, Two, Four and Six lane Roads. (05 hrs) 31.Practice Village Road Driving & Perform Highway Driving. (05 hrs) 32. Practice Driving in Crowded Street. (05 hrs) 33.Perform Cross country Driving. (05 hrs)	Night Driving: Location of Head light switch, Use of Head light, Use of Dipper at night- Procedure. Lane Selection and lane Discipline: Single, double, 4 and 6 lanes Village and Highway Driving: Procedures and precautions. Driving under Special Condition: In wet weather, In dawn, dusk and misty road, In dense traffic, Cross country driving - Knowledge on Ground Clearance. (04 hrs.)
		34.Practice Hill Driving: Driving uphill, driving downhill, Driving in Hairpin bend. 4 WD Drive Practice. (5 hrs) 35.Perform Vehicle Towing Practice. (5 hrs)	Hill Driving: Starting in hill using parking brake method and slipping the clutch method – Procedures. Selection of gear – uphill and downhill – procedures. Towing a disabled Vehicle:

© NIMI NOT TO BE REPUBLISHED

Duration	Reference Learning Outcome	Professional Skill (Trade Practical) (With indicative hour)	Professional Knowledge (Trade Theory)
			Procedures, Precautions, Limitations under road rule regulations 1989, Identification of Towing Eye. Speed limit, 'ON Tow' board. (04 hrs.)
		36. Practice on stopping the vehicle using Handbrake. (5 hrs) 37. Perform Simulator Driving Practice: With Simulation of extreme conditions. (5 hrs)	Emergency Manoeuvres: Skidding, Horn Stuck, Fire, Wheels Coming out, Brake failure, Broken Stub axle, burst of front tyre, Sudden steering wobbling, snapping of steering linkage, Jamming of accelerator pedal, Snapping of clutch linkage, under special circumstances of collision with disabled vehicle. Brake failure during downhill, sudden obstruction in front of vehicle etc. – Prevention is better than cure. (04 hrs.)
Professional Skill 20 Hrs; Professional Knowledge 07 Hrs	Drive vehicle following Traffic Regulations maintaining good road conduct. ASC/	38. Practice Driving on Various road as per Road Rule Regulation 1989. (07 hrs) 39. Practice Demo on Hand Signals of a Driver. (07 hrs) 40. Perform Driving test at concern RTO(6)	TRAFFIC EDUCATION: Motor Vehicle Act, Important definitions and salient features of motor vehicle Act. Vehicle registration and insurance of motor vehicle. Learner's license and its particulars, Driving License particulars and its renewal. Knowledge about log book and different Forms and papers related to vehicles. Vehicle fitness certificate, Permit and Tax and production of documents on demand by checking officers. Knowledge on seating Capacity and load limit. Knowledge on loading and load distribution on vehicle while loading of goods. Know your Road: Functional classification, Design Speed, Road Geometrics, Surface types and characteristics, Slopes and Elevation. Sight Distance: At bends, At intersections Road Junctions: Principles and Types, T junction, Y junction, 4-Arm junction, Staggered Junction, Controlled Junction, Uncontrolled Junction.

© NIMI NOT TO BE REPUBLISHED

Duration	Reference Learning Outcome	Professional Skill (Trade Practical) (With indicative hour)	Professional Knowledge (Trade Theory)
			Traffic Islands: Types of roundabouts, channelisers, Median Bye-Pass, Subway, Over-bridge and flyovers: Purpose, precautions and procedures Driving according to other Road Users Characteristics: Pedestrians, drunkards, Children, blind, deaf, dump, youth, aged, women with children, Slow-moving vehicles, Mopeds, Motor cycles, Autos, Tempos, Vans, Buses, Trucks, VIP, Ambulance, Fire Engine and Animals etc.. Accidents: Types, Causes, Preventive methods, Drivers duties and responsibilities on the occurrence of accidents. Symbols on the vehicle which is carrying Hazardous goods: Panel Board, Class Labels. Important provision of motor vehicle Act section 122,125,126 ,128,131,132,133,134,135,136 & 139. Legal awareness. Traffic offences and penalties stipulated under the act and rules. Driving Test: Sub rule 3 of Rule 15 of Central Motor Vehicle Rules 1989. (07 hrs.)
Professional Skill 20 Hrs; Professional Knowledge 07 Hrs	N9704 Perform Daily Maintenance/ Daily Inspection on Vehicle. ASC/N9704	ENGINE BASICS: 41. Identification of different types of vehicle and engine components. (04 hrs) 42. Familiarization of operator manual. Check / replenish / top up – lubricating oil, engine coolant, power steering hydraulic oil, wind screen wiper water, battery electrolyte and transmission oil. (05 hrs) 43. Replace – air cleaner, oil filter & fuel filter. (5 hrs) 44. Apply Grease to parts / through greasing points (if necessary). (06 hrs)	VEHICLE MECHANISM: Nomenclature of different parts of vehicle and their locations. Classification of vehicle & load carrying capacities. Pattern of loading various goods. E C & I C Engine – Types, engine terminologies, parts description & functions. Types of fuels used in vehicle. Working principle of 4 stroke SI & CI engines. Differences between 2 strokes & 4 strokes engine, petrol & diesel engines. Concept of MPFI, CRDI, Turbo Chargers, EDC Fuel supply layouts in diesel engines, Injection systems. Brief introduction on injectors.

© NIMI NOT TO BE REPUBLISHED

Duration	Reference Learning Outcome	Professional Skill (Trade Practical) (With indicative hour)	Professional Knowledge (Trade Theory)
			Lubrication system, types of filters & lubricants. Types of Greases & greasing points. Recommended vehicle maintenance schedules.(07 hrs.)
Professional Skill 46 Hrs; Professional Knowledge 14 Hrs	Carry out checks of Vehicle aggregates. ASC/N9704	TRANSMISSION SYSTEM: 45. Check / replenish / transmission oil. (05 hrs) 46. Check breathers and Clutch Pedal Play. (05 hrs) BRAKE SYSTEM 47. Check and top up Brake fluid in the Reservoir. (10 hrs) 48. Perform Brake Bleeding. (05 hrs) 49. Perform Adjustment of brake paddle play. (04 hrs)	Layout of power flow from Engine to wheels. Purpose of clutch, Types of Clutch, Knowledge on Clutch play, Types of gear box- Gear Shifting procedures General defects in clutch, manual gearbox Knowledge on Automatic transmission and Automated Manual Transmission. Propeller Shafts, & Knowledge on differential. Knowledge on 2 and 4 wheel drive. Types of Brake systems – working principle of drum and disc brakes General defects in brake systems. Tandum Master Cylinder Procedure to be followed in case of brake failure. (07 hrs.) Antilock Brake System
		STEERING SYSTEM 50. Check level of power steering oil in the reservoir. (07 hrs) SUSPENSION SYSTEM 51. Grease the points in suspension system. (10 hrs)	Types of steering System and its working, Power assisted steering, Steering linkages. Types of suspension system, Greasing points Effect of tampering the suspension system. Brief on suspension and its effects on steering. (07 hrs.)
Professional Skill 29 Hrs; Professional Knowledge 07 Hrs	Check ignition circuit for proper functioning. ASC/ N9704	BATTERY AND IGNITION SYSTEM: 52. Remove and refit of Fuses, head lamp, Signal lamps, Parking lamp bulbs. (05 hrs) 53. Check and adjust Head Lamp High Beam, Low Beam, Pass by beam. (04 hrs) 54. Check Combination switches, Directional indicators, Wiper-Intermittent operation, low & high speed operations. (05 hrs) 55. Perform Cleaning and topping up of a lead acid battery. (5 hrs) 56. Remove and refit lead acid battery. (05 hrs)	Ignition system circuit & components. Actions to be taken when Ignition key lost. Spare/Duplicate key information & location. Definition of Fuses & need for fuses in electrical circuits. Brief introduction on ignition Description of chemical effect, Batteries and cells, lead acid batteries & stay maintenance free (SMF) batteries. Fuse Ratings. (07 hrs.)

© NIMI NOT TO BE REPUBLISHED

Duration	Reference Learning Outcome	Professional Skill (Trade Practical) (With indicative hour)	Professional Knowledge (Trade Theory)
		57. Carry out checks on Alternator unit, Battery and Power units. (05 hrs)	
Professional Skill 29 Hrs; Professional Knowledge 07 Hrs	Check wheel alignment and Perform Wheel Rotation. ASC/ N9704	TYRE REPAIR/INSPECTION: 58. Practice Removal & re-fitting of wheel from vehicle. (07 hrs) 59. Perform Measurement of tread wear. (07 hrs) 60. Carryout Inflating the tyres with compressed Air /Nitrogen from Tyre inflator. (05 hrs) 61. Repair a Puncture Tyre using Tubeless puncture Repair kit. (05 hrs). 62. Practice on Tyre rotation as per vehicle manufacturers recommendation. (05 hrs)	Types of wheels, designation, construction. Types of tyres & tubes (solid & pneumonic tyre – Cross ply & Radial ply, desirable properties component & function, designation, tyre ratings for temperature & traction. Maintenance of tyre & tubes. Reasons for defects of tyre. Tread patterns & their applications. Inspection procedure. Tyre pressure monitoring system. Procedure for retreading the Tyre. Procedure for tyre rotation for Different make of vehicle. Tubeless Tyres. Thread wear Indicator. DOT (Manufacturing Date code) Importance of Two wheel & four wheel alignment. Reasons for Alignment problems – steering pull, off-center steering, steering shimmy, excessive steering effort, poor self-centering and memory steer, bump steer, torque steer & steering harshness-alignment diagnostics chart & steering problem diagnostic chart. Meaning of balance, causes & effects of imbalance, vibration. Identification of source, transfer path & responder of vibration(can be felt & can be heard) Steering wheel shake – shimmy, wobble & waddle Brief on static balance, dynamic balance, Mounting errors (radial & lateral) & excessive (Tyre& rim) run out-lateral & radial and mismatches. (07 hrs.)
Professional Skill 46 Hrs; Professional Knowledge 14 Hrs	Carry out the general servicing of vehicle components. ASC/ N9704	Maintenance of Vehicle Systems: 63. Perform Air bleeding in diesel vehicle. (05 hrs) 64. Check and replacing wiper blades. (05 hrs) 65. Checking coolant reservoir tank. (03 hrs)	Cooling system & types of Anti-freeze /Anti rust solutions use. Air intake and Exhaust System Knowledge about CNG & LPG Gas kit. Cooling and lubrication system. Air Intake System. Exhaust system, Different types of fuel. Fuel Properties,

© NIMI NOT TO BE REPUBLISHED

Duration	Reference Learning Outcome	Professional Skill (Trade Practical) (With indicative hour)	Professional Knowledge (Trade Theory)
		66. Practice Cleaning air cleaner. (06 hrs) 67. Perform Cleaning of cooling motor. (06 hrs) 68. Carryout Emission testing. (06 hrs) 69. Check the Air conditioner and heater unit. (06 hrs) JACKS & HAND TOOL KITS: 70. Practice on using different type of vehicle jacks. (05 hrs) 71. Practice on using vehicle hand tool kit. (04 hrs)	Stoichiometric Ratio. Introduction to HVAC system. Specification, types and uses of different kinds of vehicle jacks. Description, care and maintenance of Mechanical & Hydraulic jacks. Description, care and maintenance of vehicle tools in kit. Identification of Jacking Points. Basics of computer, Email operation system. Fluency in reading and writing Writing of Reports Mathematical calculations on loads/freight/fares/KMPL. Management of personal expenses. Need to Cultivate habit of Savings for future needs. Knowledge on various general and personal Insurance Knowledge on Various saving schemes available with nationalized bank. (14 hrs.)

© NIMI NOT TO BE REPUBLISHED

Driver Cum Mechanic (LMV) - General Safety Precaution and Driving Regulations

Practice to identify the tools and machineries used in the trade

Objectives: At the end of this exercise you shall be able to
- **identify tools used in the trade**
- **identify the machineries used in the trade**
- **know the importance of the trade.**

Requirements

Tools/Instruments

• Trainee's tool kit	- 1 No.	• Two post ram	- 1 No.
• Mechanical jack	- 1 No.	• Tyre changer	- 1 No.
• Hydraulic jack	- 1 No.	• Hot patch machine	- 1 No.
• Jack stand ss	- 1 No.	• Air compressor	- 1 No.
• Tyre pressure gauge	- 1 No.	• Welding Machine	- 1 No.

Equipment/Machines

• Vehicle	- 1 No.
• Car washer	- 1 No.

Materials/Components

• Cotton waste	- as reqd
• Soap oil	- as reqd

PROCEDURE

TASK 1: **Identify the tools used in driver cum mechanic trade**

1 Take the participants around the workshop.
2 Identify the major workshop machinery like compressor, drilling machines.
3 Explain the constructional features and the use of compressor, air receiver.
4 Explain the use of compressed air and its applications.
5 Demonstrate the importance of wheel alignment.
6 Explain the use of bench drilling machine, pillar drilling machine.
7 Explain about the need for wheel balancing machine.
8 Explain the component of a spark plug tester.
9 Demonstrate the gap measurement in a spark plug.
10 Explain through display charts, the features of all equipment's in an automotive workshop.
11 Explain about the need of tyre changer.

Note: Instructor should be layout that all tools used in the trade and labeled the name of tool near the tool layout

- Identify the trainee's tool contain in the tool box. (Double end spanner ring spanner, pipe wrench, hammer, chisel, screw driver, brass tip, feeler gauge hand file, Etc.)
- Identify the tyre lever, jacks (mechanical or hydraulic)
- Identify the jack stand.

TASK 2: **Identify the machinery laid in your trade section**

1 Identify the air compressor. (Fig 1)
2 Identify the car washing ramp. (Fig 2)
3 Identify the mechanical and hydraulic jack. (Figs 3 - 4)
4 Identify the jack stand. (Fig 5)
5 Identify the oil gun and grease gun. (Fig 6)
6 Arbor press. (Fig 7)
7 Identify the welding machine, drill machine (Fig 8) and vacuum cleaner.
8 Identify the spark plug tester. (Fig 9)

Fig 1

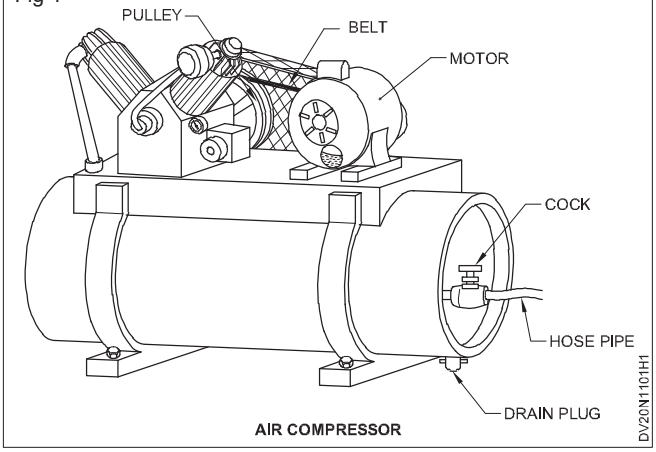

AIR COMPRESSOR

© NIMI NOT TO BE REPUBLISHED

Fig 2

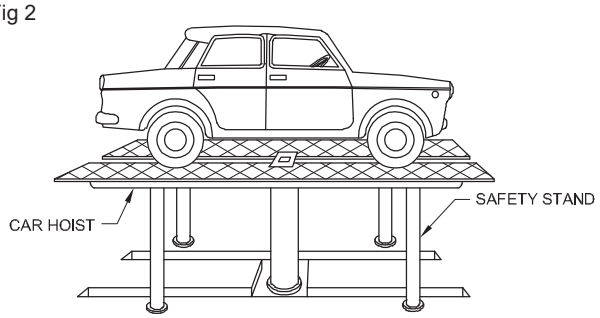

HYDRAULIC CAR HOIST

DV20N1101H2

Fig 3

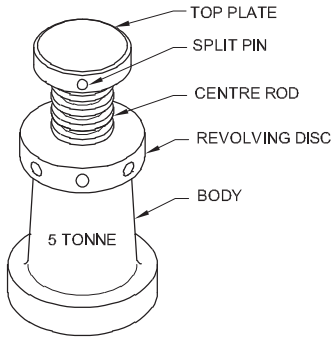

MECHANICAL JACK

DV20N1101H3

Fig 4

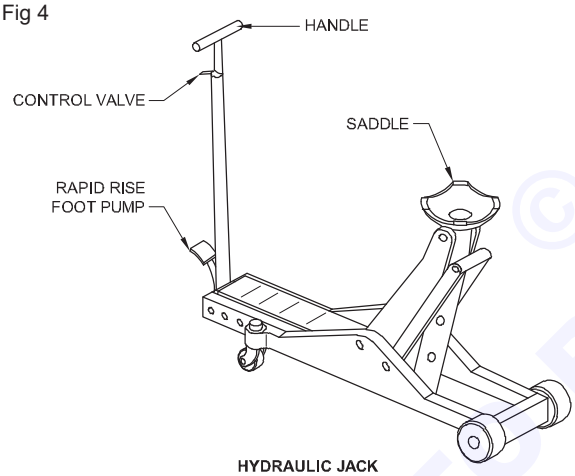

HYDRAULIC JACK

DV20N1101H4

Fig 5

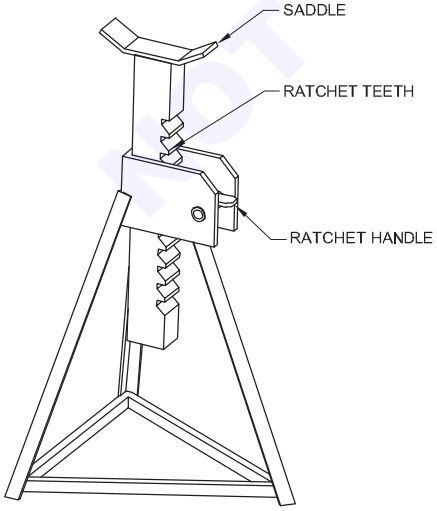

TYPICAL ADJUSTABLE JACK STAND

DV20N1101H5

Fig 6

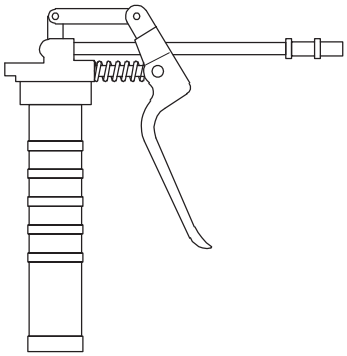

GREASE GUN

DV20N1101H6

Fig 7

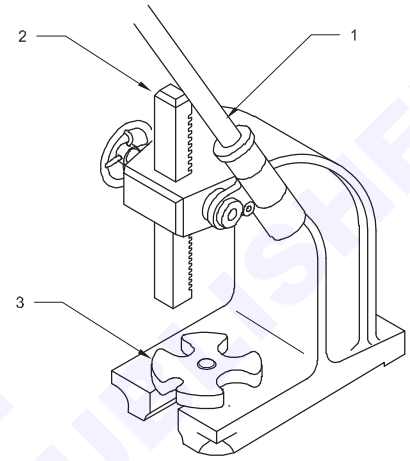

DV20N1101H7

Fig 8

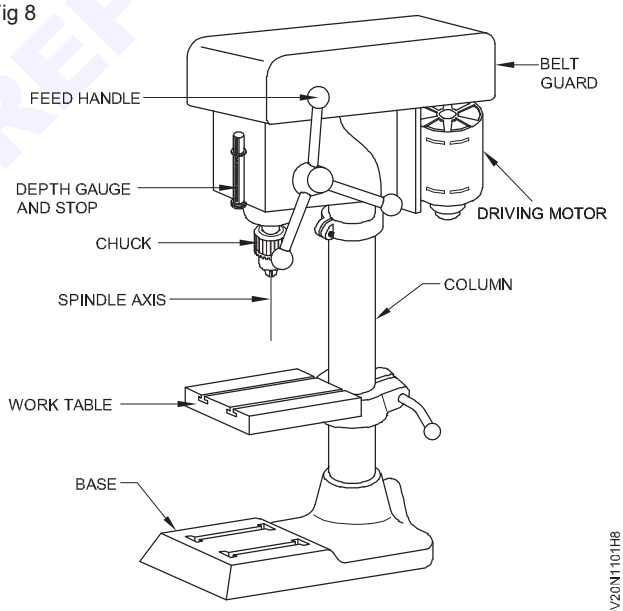

DV20N1101H8

Fig 9

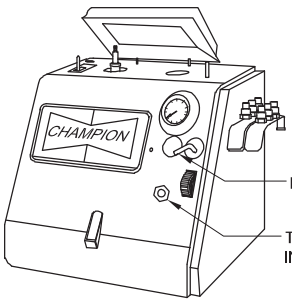

DV20N1101H9

© NIMI NOT TO BE REPUBLISHED

9 Identify the wheel balancer. (Fig 10)

Fig 10

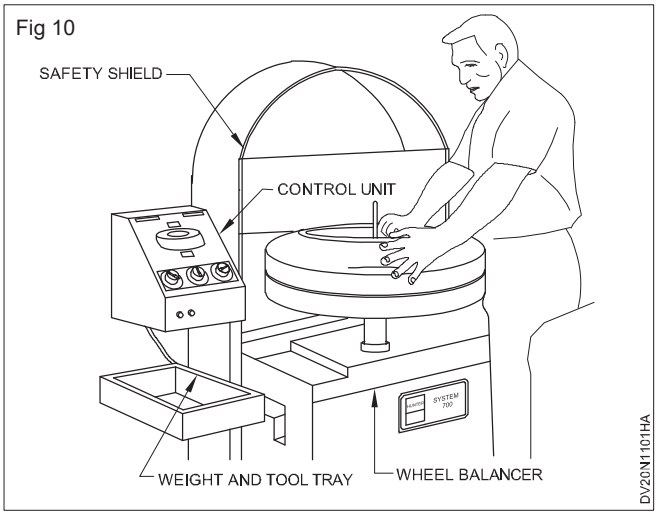

Fig 11

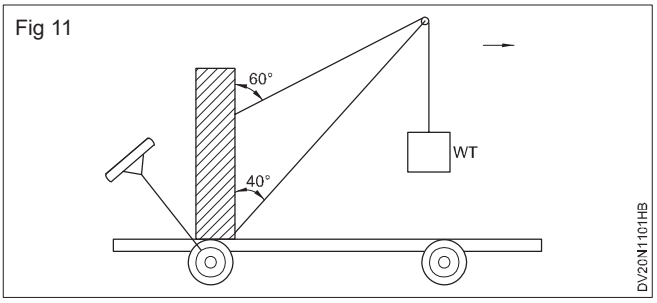

Fig 12

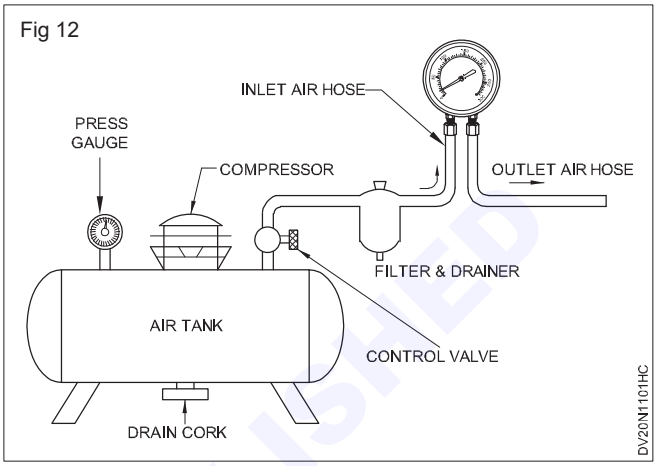

10 Identify the crane (Fig 11) and fork lift.

11 Identify wall mounted tyre pressure gauge. (Fig 12)

12 Identify the car washer.

13 Write down the machineries available in your trade section in table 1

Table 1

S. No	Machine Name	Purpose of machine	Quantity of machine

— — — — —

TASK 3: **Importance of driver cum mechanic trade**

1 Write down the job opportunity in table 1.

Table 1

S. No	Job opportunity area	Nature of work	Remarks
1	Self	Own vehicle drive	Life style with own
2	Government	Govt. office vehicle driver	Government service
3	Private	Taxi driver, Company vehicle driver, dealer point driver	Money earning source
4	Aboard	Personal driver	High value money earning
5	Air port	Tractor, Fire vehicle, Passenger vehicle	Designated job
6	Port	Truck driver, Fork lift, Crane driver	Designated job
7			
8			
9			
10			

— — — — —

© NIMI NOT TO BE REPUBLISHED

Driver Cum Mechanic (LMV) - General Safety Precaution and Driving Regulations

Practice to occupational safety and environment guide lines

Objectives: At the end of this exercise you shall be able to

- **observe the safety and health guide lines**
- **study the safety and environment guide lines**
- **study the legislation & regulations for drivers**
- **practice the safe disposal of used waste materials.**

Requirements

Tools/Instruments

- Trainee's tool kit - 1 No.
- Safety tips chart - 1 No.
- Legislation regulation book - 1 No.
- Trolley - 1 No.

Equipment/Machines

- Vehicle - 1 No.
- Simulator - 1 No.
- Plastic containers - 1 No.

Materials/Components

- Cotton waste - as reqd
- Soap oil - as reqd

PROCEDURE

TASK 1: **Safety and health tips for driver cum mechanic**

1 Be aware of your surroundings.

2 Maintain a correct procedure for driving.

3 Take break regularly after work completion or between long work duration.

4 Follow prescribed method of driving and vehicle maintenance.

5 Use the proper equipment to repair / maintenance the vehicle.

6 Do not use unsafe driving method.

7 Practice effective vehicle check before operate the vehicle.

8 Practice to use of mechanical and while maintaining / repairing the vehicle.

9 Wear the correct safety equipment before vehicle drive / repair the vehicle.

10 Reduce the work place stress.

11 Take breaks while drive the vehicle for long distance.

— — — — —

TASK 2: **Safety and environment guidelines for driver cum mechanic**

1 Secure the safety, health and welfare of passengers travel in your vehicle.

2 Protect the public from the safety and health risks of vehicle drive on the public place/road.

3 Follow the statutes relating to safety aspects of substances, equipment and environment.

4 Eliminate workplace risks at the source.

5 Don't use the heavy exhaust smoke producing vehicle which is affect the human health.

6 Each person who operates equipment must have a valid driving license, that is legally appropriate for the type of vehicle they are operating.

7 All mobile equipment must be provided with a windshield that is free of cracks or other conditions that impede the vision of the operator.

8 Operating and maintenance materials must be kept in the cab of all mechanized equipment.

9 Where the vehicle is moved, tools and materials should be secured so as not to post hazard to either workers or the general public.

10 Vehicles that have an obstructed view to the rear of the equipment must be equipped with a backup alarm (audio surrounding noise levels)

11 Careless, reckless unsafe operation of equipment is strictly prohibited.

12 Seat belt must be wear by any person operating a vehicle or piece of equipment or riding as a passenger.

13 Passengers are only permitted to ride in equipment where permissible by vehicle manufacturer recommendation.

14 Obey ported speed limit, if the speed limit is not ported maintain speed at or below 10 to 15 km/per hour while on campus.

© NIMI NOT TO BE REPUBLISHED

15 All vehicles must have a first aid kit. The engines of vehicles and equipment must be shut down prior to fueling

— — — — —

TASK 3: **Legislations and regulations as applicable for drivers**

1 Keep your vehicle in left road lane while driving and allow vehicles from the opposite direction to pass.

2 Move cautiously and slowly during congestion on roads.

3 Remain within the right distance.

4 Understand and follow the road sings.

5 Maintain the right distance between vehicles.

6 Don't drink and drive.

7 Always keep the valid vehicle insurance policy with the vehicle.

8 Follow road signals and traffic rules.

9 Over speed is offence and crossing red light signal also offence.

10 Don't use a mobile phone while driving the vehicle.

— — — — —

TASK 4: **Disposal procedure of waste materials (Fig 1)**

1 Store the waste materials like cotton waste, metal chips / burrs in separate, separate dust bins.

2 Don't mix the waste cotton and metal chips.

3 Wear protective clothing such as gloves, mask, shoes, apron etc. while disposal waste materials.

4 Never keep the used cotton waste near the hot area or near flame.

5 While transporting the waste material, ensure that there is no drops during transport the waste materials.

6 Use the waste metal chips / burrs to recycling process.

7 Maintain the record of disposal materials in your section. (Fig 1)

Fig 1

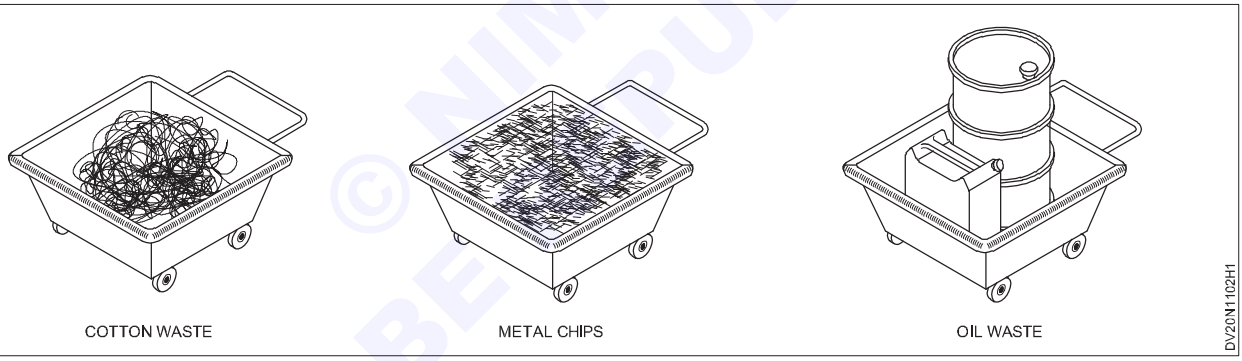

— — — — —

© NIMI NOT TO BE PUBLISHED

Practice on first aid and fire safety

Objectives: At the end of this exercise you shall be able to
- **prepare the victim to receive artificial respiration**
- **resuscitate the victim by Nelson's arm - lift back pressure method**
- **resuscitate the victim by schafer's method**
- **resuscitate the victim by mouth-to-mouth method**
- **resuscitate the victim by Mouth-to-Nose method**
- **resuscitate a victim who is under cardiac arrest (CPR) cardio pulmanary**
- **treatment for bleeding victim**
- **practice on fire safety**
- **practice to basic injury prevention while driving a vehicle**
- **identify the safety sign**
- **identify the personal protective equipments**
- **identify the occupational hazards**
- **identify the PPE Instruction and uses.**

Requirements

Tools/Instruments

• Trainee's tool kit	- 1 No.
• Safety signs chart	- 1 No.
• Legislation regulation book	- 1 No.
• Trolley	- 1 No.

Equipment/Machines

• Structure	- 1 No.

Materials/Components

• Cotton waste	- as reqd
• First aid kit	- as reqd
• Blanket	- as reqd
• Bandage	- as reqd
• Cotton	- as reqd

PROCEDURE

TASK 1: **Prepare the victim to receive artificial respiration**

Assumption - For easy manageability, Instructor may arrange the trainees in group and ask each group to perform one method of resuscitation.

1 Loosen the tight clothing which may interfere with the victim's breathing.

2 Remove any foreign materials or false teeth from his mouth and keep the victim's mouth open.

3 Bring the victim safely to the level ground, taking necessary safety measures. (Fig 1)

4 Start artificial respiration immediately without delay. Do not waste too much time in loosening the clothes or trying to open the tightly closed mouth.

5 Avoid violent operations to prevent injury to the internal parts of the victim.

6 Send to a doctor immediately.

Fig 1



DV20N1103H1

TASK 2: **Resuscitate the victim by Nelson's arm - lift back pressure method**

Nelson's arm - lift back pressure method must not be used in case there are injuries to the chest and belly.

1 Place the victim prone (that is face down) with his arms folded with the palms one over the other and the head resting on his cheek over the palms. Kneel on one or both knees near the victim's hand. Place your hands on the victim's back beyond the line of the armpits, with your fingers spread outwards and downwards, thumbs just touching each other as in (Fig 1).

© NIMI NOT TO BE REPUBLISHED

Fig 1

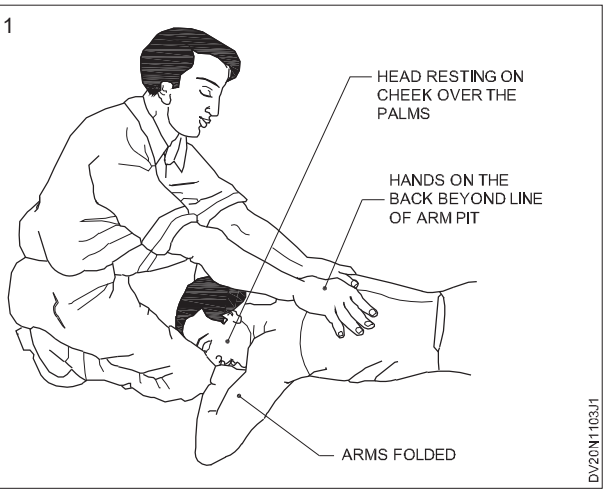

2 Gently rock forward keeping your arms straight until they are nearly vertical, and steadily pressing the victim,s back as shown in (Fig 2) to force the air out of the victim's lungs.

Fig 2

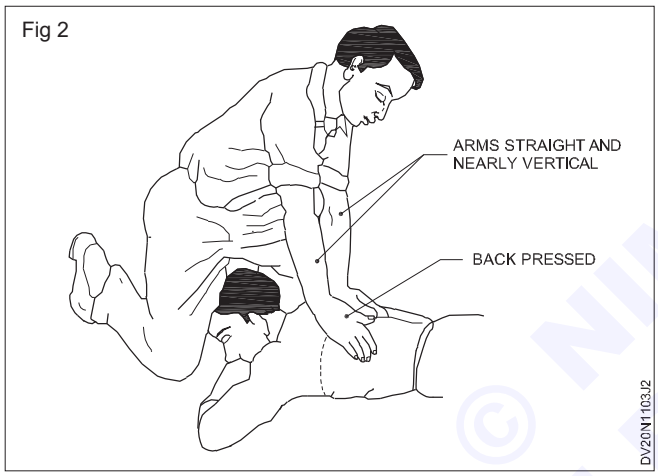

3 Synchronise the above movement of rocking backwards with your hands sliding downwards along the victim's arms, and grasp his upper arm just above the elbows as shown in (Fig 3). Continue to rock backwards.

4 As you rock back, gently raise and pull the victim's arms towards you as shown in (Fig 4) until you feel tension in his shoulders. To complete the cycle, lower the victim's arms and move your hands up to the initial position.

Fig 3

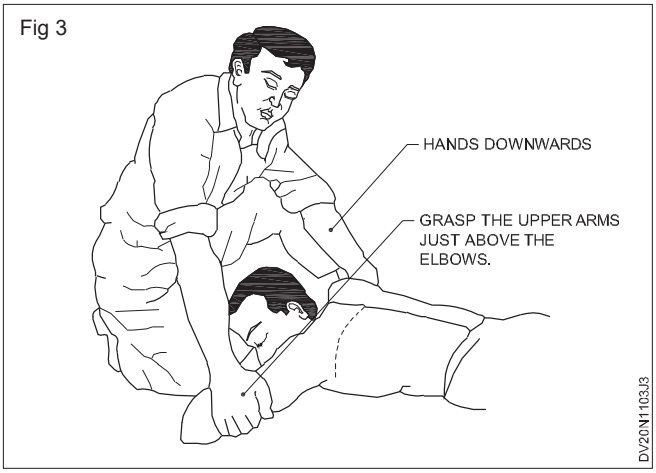

Fig 4

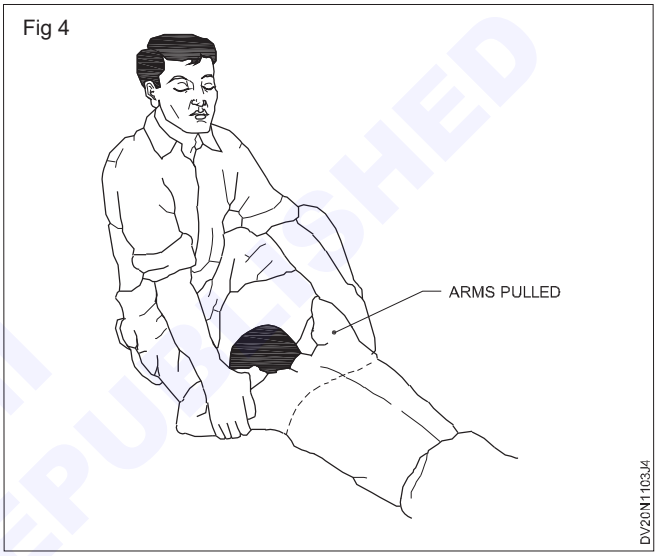

5 Continue artificial respiration till the victim begins to breathing naturally. Please note, in some cases, it may take hours.

6 When the victim revives, keep the victim warm with a blanket, wrapped up with hot water bottles or warm bricks; stimulate circulation by stroking the insides of the arms and legs towards the heart.

7 Keep him in the lying down position and do not let him exert himself.

Do not give him any stimulant until he is fully conscious.

— — — — —

TASK 3: **Resuscitate the victim by schafer's method**

Do not use this method in case of injuries to victim on the chest and belly.

1 Lay the victim on his belly, one arm extended direct forward, the other arm bent at the elbow and with the face turned sideward and resting on the hand or forearm as shown in (Fig 1).

2 Kneel astride the victim, so that his thighs are between your knees and with your fingers and thumbs positioned as in (Fig 1).

Fig 1

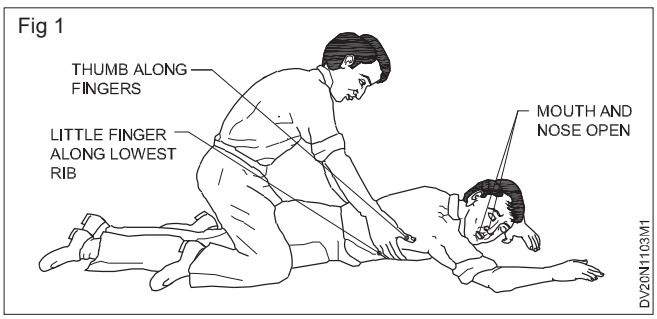

© NIMI NOT TO BE REPUBLISHED

3 With the arms held straight, swing forward slowly so that the weight of your body is gradually brought to bear upon the lower ribs of the victim to force the air out of the victim's lungs as shown in (Fig 2).

Fig 2

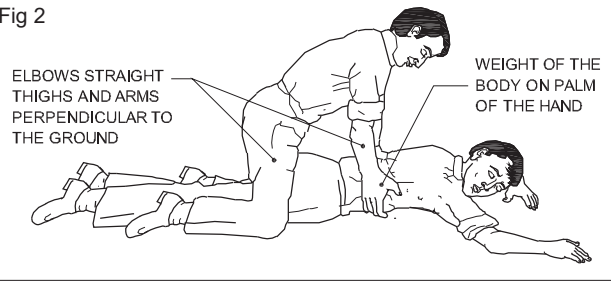

4 Now swing backward immediately removing all the pressure from the victim's body as shown in (Fig 3) thereby, allowing the lungs to fill with air.

Fig 3

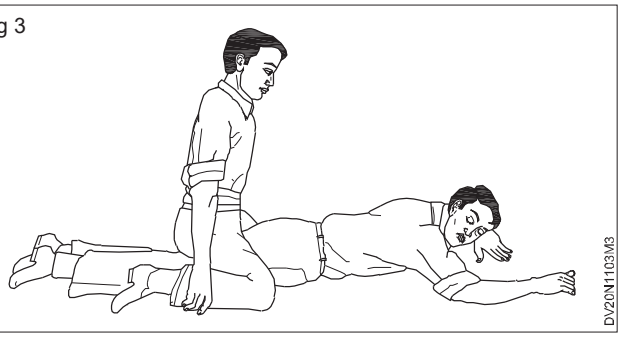

5 After two seconds, swing forward again and repeat the cycle twelve to fifteen times a minute.

6 Continue artificial respiration till the victim begins to breathe naturally.

— — — — —

TASK 4: **Resuscitate the victim by mouth-to-mouth method**

1 Lay the victim flat on his back and place a roll of clothing under his shoulders to ensure that his head is thrown well back. (Fig 1)

Fig 1

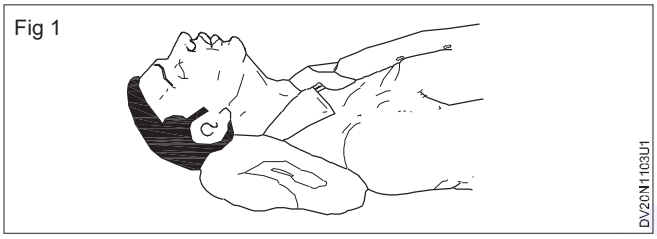

2 Tilt the victim's head back so that the chin points straight upward. (Fig 2)

Fig 2

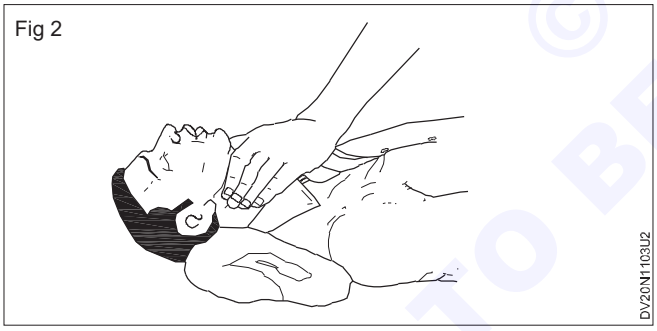

3 Grasp the victim's jaw as shown in (Fig 3), and raise it upward until the lower teeth are higher than the upper teeth; or place fingers on both sides of the jaw near the ear lobes and pull upward. Maintain the jaw position throughout the artificial respiration to prevent the tongue from blocking the air passage.

Fig 3

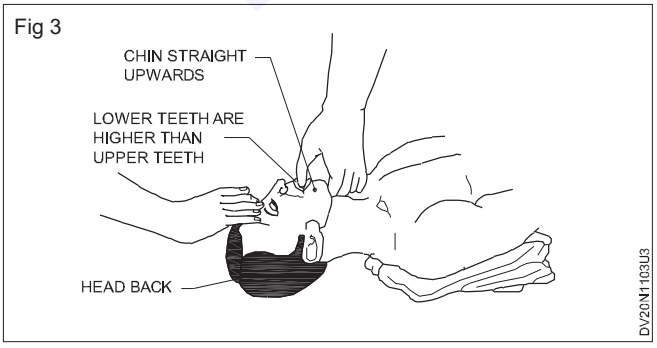

4 Take a deep breath and place your mouth over the victim's mouth as shown in (Fig 4) making airtight contact. Pinch the victim's nose shut with the thumb and forefinger. If you dislike direct contact, place a porous cloth between your mouth and the victim's. For an infant, place your mouth over his mouth and nose. (Fig 4)

Fig 4

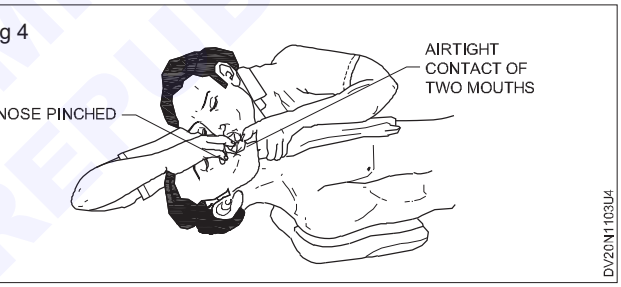

5 Blow into the victim's mouth (gently in the case of an infant) until his chest rises. Remove your mouth and release the hold on the nose, to let him exhale, turning your head to hear the rushing out of air. The first 8 to 10 breathings should be as rapid as the victim responds, thereafter the rate should be slowed to about 12 times a minute (20 times for an infant).

If air cannot be blown in, check the position of the victim's head and jaw and recheck the mouth for obstructions, then try again more forcefully. If the chest still does not rise, turn the victim's face down and strike his back sharply to dislodge obstructions.

Sometimes air enters the victim's stomach as evidenced by a swelling stomach. Expel the air by gently pressing the stomach during the exhalation period.

— — — — —

© NIMI NOT TO BE REPUBLISHED

TASK 5: **Resuscitate the victim by Mouth-to-Nose method**

Use this method when the victim's mouth will not open, or has a blockage you cannot clear.

1 Use the fingers of one hand to keep the victim's lips firmly shut, seal your lips around the victim's nostrils and breathe into him. Check to see if the victim's chest is rising and falling. (Fig 1)

2 Repeat this exercise at the rate of 10 - 15 times per minute till the victim responds.

3 Continue this exercise till the arrival of the doctor.

Fig 1



DV20N1103V1

— — — — —

TASK 6: **Resuscitate a victim who is under cardiac arrest (CPR) cardio pulmanary**

In cases where the heart has stopped beating, you must act immediately.

1 Check quickly whether the victim is under cardiac arrest.

Cardiac arrest could be ascertained by the absence of the cardiac pulse in the neck

(Fig 1) blue colour around lips and widely dilated pupil of the eyes.

Fig 1



DV20N1103W1

2 Lay the victim on his back on a firm surface.

3 Kneel alongside facing the chest and locate the lower part of the breastbone. (Fig 2)

Fig 2



DV20N1103W2

4 Place the palm of one hand on the centre of the lower part of the breastbone, keeping your fingers off the ribs. Cover the palm with your other hand and lock your fingers together as shown in (Fig 3).

5 Keeping your arms straight, press sharply down on the lower part of the breast bone, then release the pressure. (Fig 4)

Fig 3

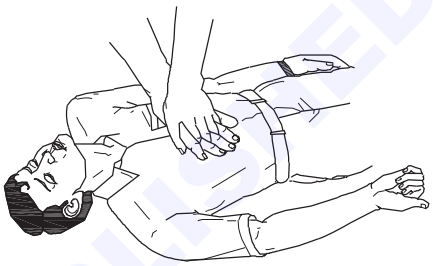

DV20N1103W3

Fig 4



DV20N1103W4

6 Repeat step 5, fifteen times at the rate of at least once per second.

7 Check the cardiac pulse (Fig 5).

Fig 5

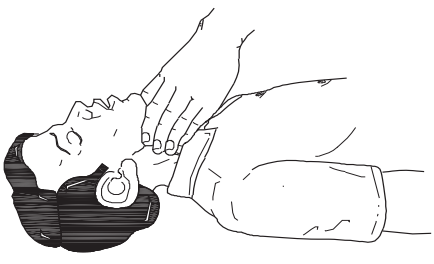

DV20N1103W5

8 Move back to the victim's mouth to give two breaths (mouth-to-mouth resuscitation). (Fig 6)

9 Continue with another 15 compressions of the heart followed by a further two breaths of mouth-to-mouth resuscitation, and so on, check the pulse at frequent intervals.

© NIMI NOT TO BE REPUBLISHED

Fig 6



DV20N1103W6

10 As soon as the heart beat returns, stop the compressions immediately but continue with mouth-to-much resuscitation until natural breathing is fully restored.

11 Place the victim in the recovery position as shown in (Fig 7). Keep him warm and get medical help quickly.

Other steps

1 Send for a doctor immediately.

2 Keep the victim warm with a blanket, wrapped up with hot water bottles or warm bricks; stimulate circulation by stroking the insides of the arms and legs towards the heart.

Fig 7

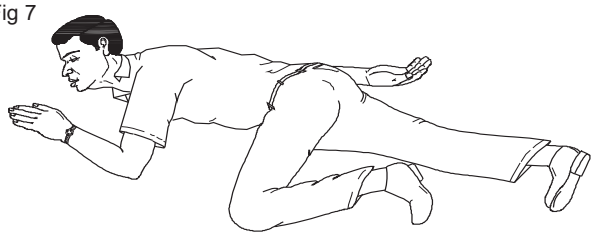

DV20N1103W7

— — — — —

TASK 7: **Treatment for bleeding victim**

1 Determine the location of the bleeding.

2 Elevate the injured area above the heart if possible.

3 Apply direct pressure to the bleeding area with sterile cloth.

4 Keep the pressure on for 5 seconds. (Fig 1)

Fig 1

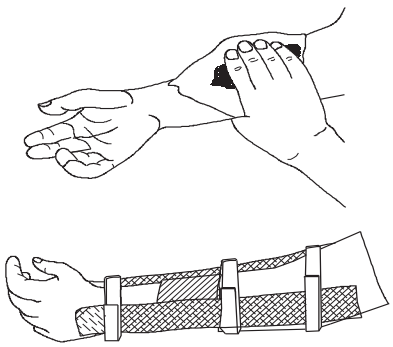

DV20N1103X1

5 Check to see if the bleeding has stopped if not apply further pressure for 15 minutes. (Fig 2)

Fig 2

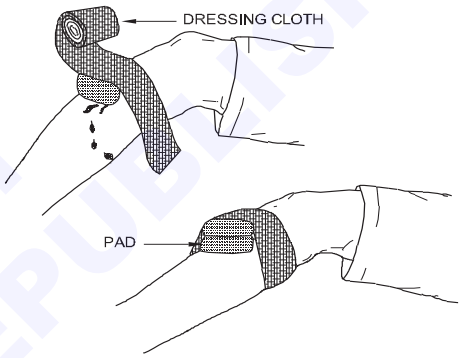

DV20N1103X2

6 Clean the wound.

7 Bandage the wound with pad of soft material.

8 Advice victim to take treatment from doctor.

Note: Perform this exercise with support of health centre's experienced staffs opinions.

— — — — —

TASK 8: **Practice on fire safety**

General procedure to be adopted in the event of fire.

1 Raise an alarm. Follow the method written below for giving an alarm signals when fire breaks out.

- By raising your voice and shouting Fire! Fire! to call the attention of others.
- Running towards fire alarm/bell to actuate it.
- Other means.

2 On receipt of the alarm signal.

- Stop working.
- Turn off all machinery and power.
- Switch off fans/air circulators/exhaust fans. (Better switch off the main)

3 If you are not involved in fighting the fire.

- Leave calmly using the emergency exit.
- Evacuate the premises.
- Assemble at a safe place along with the others.
- Check if anyone has gone to inform about the fire break to the concerned authority.
- close the doors and windows, but do not lock or bolt.

4 If you are involved in fire fighting.

- take instructions/give instructions for an organized way of fighting the fire.

If taking instructions.

- follow the instructions, and obey, if you can do so safetly; do not risk getting trapped.

© NIMI NOT TO BE REPUBLISHED

If giving instructions.

- assess the class of fire
- send for sufficient assistance and inform the fire brigade
- locate locally available suitable means to put out the fire
- judge the magnitude of the fire, ensure emergency exit paths are clear of obstructions and then attempt to evacuate. (Remove explosive materials, substances that can serve as a ready fuel for fire within the vicinity of the fire break)
- Fight out the fire with assistance to put it out, by naming the person responsible for each activity.

5 Report the fire accident and the measures taken to put out the fire, to the authorities concerned.

Reporting all fires however small helps in the investigation of the cause of the fire. It helps to prevent the same kind of accident occurring again.

Note : Perform this exercise with the support of fire service station.

— — — — —

TASK 9: **Practice to basic injury prevention while driving a vehicle**

1 Drive the vehicle prescribed speed limit on road condition.

2 Always wear helmet if you drive the two wheeler or crane.

3 Don't drink and drive the vehicle.

4 Never use the mobile phones or ear phone while driving a vehicle traffic.

5 Follow the road traffic rules and regulations.

6 Follow the road signs, signals, lights and traffic safety rules before you hit the road. Always remember that road safety rules are best tools to avoid accidents.

7 Don't drive for long hours in a stretch, have a proper breaks after every 3 hours of continuous driving.

8 Always remember that man is a man and not a machine.

9 Injury prevention frame work is referred to as the education engineering and enforcement.

— — — — —

TASK 10: **Identify the safety sign (Fig 1)**

Fig 1



DV20N1103Y1

© NIMI NOT TO BE REPUBLISHED

Instructor may provide various safety signs chart categories and explain their categories and their meaning, description. Ask the trainee to identify the sign and record in table

1 Identify the safety sign from the chart.

2 Record the name of the category in table1.

3 Mention the meaning description of the safety sign in table1.

Table 1

Fig No.	Basic categories/ safety sign	Meaning - descriptions
1		
2		
3		
4		
5		
6		
7		
8		
9		
10		
11		
12		
13		
14		
15		
16		
17		
18		
19		
20		

Get it checked by your instructor

TASK 11: **Identify the personal protective equipments**

Note: The instructor may provide or arrange the different types of personal protection equipment or chart and explain how to identify and select the PPE devices suitable for the work and ask the trainees to write names in the given table.

1 Read and interpret the personal protective equipments by visually on real devices or from the charts.

2 Identify and select the personal protection equipment used for suitable type of protection.

3 Write the name of the PPE to the corresponding type of protective safety equipments in Table 1.

Fig 1



© NIMI NOT TO BE REPUBLISHED

Table 1

S.No	Name of the PPE	Hazards	Type of protection
1			
2			
3			
4			
5			
6			
7			
8			
9			

Get it checked by your instructor.

— — — — —

TASK 12: **Identify the occupational hazards**

Instructor may brief the various types of occupational hazards and their causes.

1 Identify the occupational hazard to the corresponding situation with a potential harm given in Table 1.

Table 1

S.No.	Source or potential harm	Type of occupational hazards	Hazards protection method
1	Noise		
2	Explosive		
3	Virus		
4	Sickness		
5	Smoking		
6	Non control device		
7	No earthing		
8	Poor house keeping		

Fill up and get it checked by your instructor.

— — — — —

TASK 13: **Identify the PPE Instruction and uses**

1 Some cleaning agents are toxic. Refer to the information about handling; use and storage of chemicals that may be hazardous, follow any recommendations made by the supplier before using it.

2 Do not use flammable cleaners or water on electrical equipment.

3 Make sure designated walkways are kept clear of any obstructions.

4 Always wear protective clothing and the appropriate safety equipment.

Note: Make sure that you understand and observe all legislative and personal safety procedures.

If you are unsure of what are these procedures, ask your instructor to know more.

— — — — —

© NIMI NOT TO BE REPUBLISHED

Practice on preventing the electrical accidents and steps to be taken in such accidents

Objectives: At the end of this exercise you shall be able to
- **rescue person accident with electric live wire**
- **taken a first aid steps for electrical accident person**
- **prevention measure for electrical accidents.**

Requirements

Tools/Instruments

• Trainee's tool kit	- 1 No.
• Structure	- 1 No.
• First aid kit	- 1 No.

Equipment/Machines

• Fire fighting equipments	- 1 Set.
• Fire extinguisher each types	- 1 No.

Materials/Components

• Hot water bag	- as reqd
• Cotton waste	- as reqd
• Soap oil	- as reqd
• Blanket	- as reqd
• Cotton	- as reqd
• Tinger	- as reqd
• Band aid	- as reqd
• Rubber mat	- as reqd

PROCEDURE

TASK 1: **Isolating a person from a live electrical supply**

1 Observe the person receiving an electric shock (Fig 1)

Fig 1

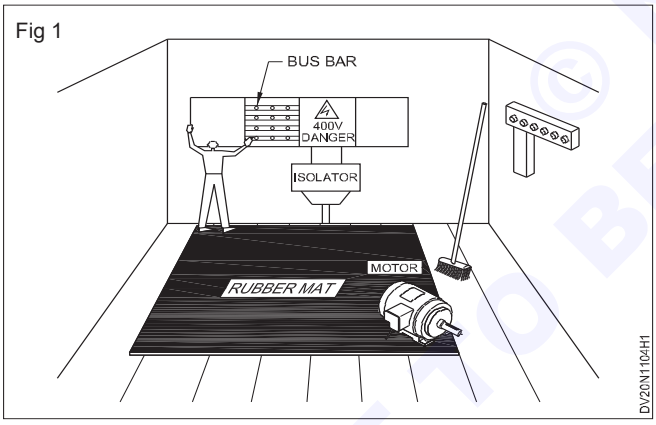

2 Immediately take necessary action to disconnect the electric power supply, which is affecting a person.

3 Remove the victim safely from the live equipment by disconnecting. The electric power supply by using any one of the insulating material or using dry non conducting material such as wooden bar, rope, a scarf, cotton cloth, rubber mat, paper, (push or pull the affected person) or switch off the main supply if it is quick near the affecting person.(Fig 2)

4 Study the effects of electric shock for injured person.

5 Move the victim physically to a nearby safe place.

6 Check the victim natural breathing and consciousness.

Fig 2

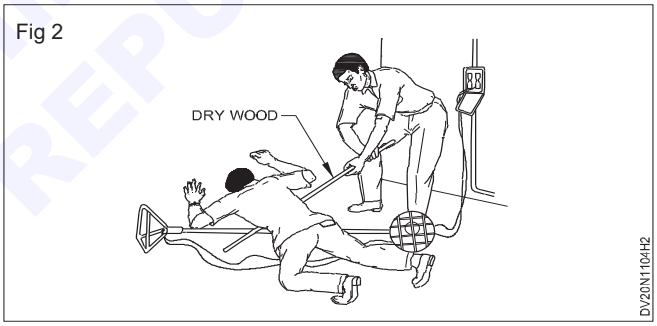

7 Take steps to apply respirator resuscitation, if the victim is unconscious and not breathing normally provide artificial respiration.

8 Inspect the effected person's burning of skin burns and scalds, sever bleeding at the point of electric point connected to him.

9 Provide a first aid to injured person and then send him for medical aid and then carry on with emergency treatment.

10 Avoid direct contact with the victim, wrap your hands in dry material if rubber glows are not available with you.

11 Find the electric burn when current passes through electric shock affected person's skin.

12 Do not waste time by applying first aid to the burning until breathing has restored and patient can breathe normally.

© NIMI NOT TO BE REPUBLISHED

13 Electric burn on skin is a large don't give treatment, except to include the air e.g. By covering water, clean paper. This relieves the pain. Immediately send the victim to nearest hospital as soon as possible.

14 If any wound which is bleeding profusely, especially in the wrist hand or fingers must be considered serious and must receive professional attention. An immediate first aid measure, pressure on the wound itself is the best means of stopping the bleeding and avoiding in fiction.

Note : Do not run to switch off the supply if main switch is far away.

Do not touch the victim with bare hands until the circuit current is made switch off or victim moved away from the current circuit.

Push or pull the victim from the point of contact or line equipment with carrying serious injury to the victim by using gloves to hold him.

— — — — —

TASK 2: **Artificial respiratory resuscitation**

1 Loosen the tight clothing of the victim. If not possible to loosen quickly, do not spend time in this activity.

2 Remove obstructions from the mouth, if any.

3 Send word for professional assistance. (If no other person is available, you stay with the victim and render help as best as you can.)

4 Look for visible injuries in the body and decide suitable method of artificial respiration.

In the case of injury burns in chest and or belly follow the mouth-to-mouth method of resuscitation.

In case the mouth is closed tightly, use schafer's method or Nelson's method.

In case of burn and injury in the back, follow Nelson's method.

5 Arrange the mock victim in the correct position for applying artificial respiration. Follow the steps of action explained in the Exercise 1.1.03 for any one method of artificial respiration, till the victim breathes naturally or professional help arrives.

All action should be taken immediately.

Delay even by a few seconds may be dangerous.

Keep the patient quiet and be careful to prevent injury to internal organs.

6 Place the mock victim in the recovery position.

7 Cover the victim with coat, sacks or improvise your own method, to keep the victim's body warm.

— — — — —

© NIMI NOT TO BE REPUBLISHED

Practice to use the fire extinguishers

Objectives: At the end of this exercise you shall be able to
- **select the fire extinguisher according to the type of fire**
- **operate the fire extinguisher.**

Requirements

Tools/Instruments

- Trainee's tool kit - 1 No.

Equipment/Machines

- Cut - Models of fire extinguisher - as reqd
- Fire extinguisher (different type) - as reqd

Materials/Components

- Old tyre - as reqd
- Wood, Paper, Cloth & Grease - as reqd
- Gas and Liquified gas - as reqd
- Metal and Electrical equipment - as reqd

PROCEDURE

TASK 1: **Fire extinguisher according to the type of fire**

1 Alert people surrounding by shouting fire, fire, fire when you observe fire (Fig 1a).

2 Inform to Fire Service or arrange to inform immediately (Fig 1b).

Fig 1

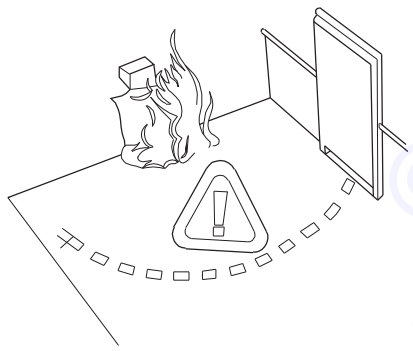

(a)



(b)



(c)

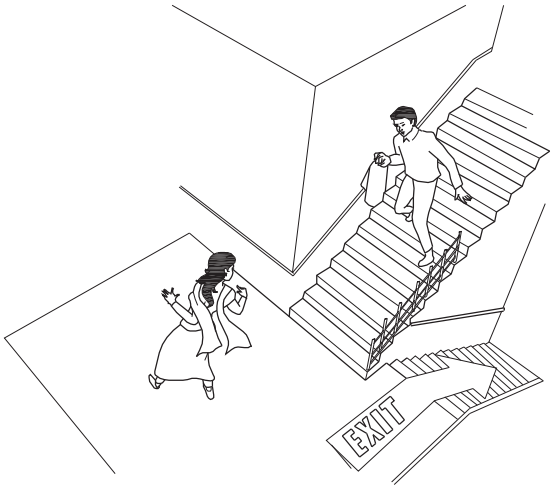

(d)

DV20N1105H1

© NIMI NOT TO BE REPUBLISHED

3 Open emergency exit and ask them to go away. (Fig 1c & 1d)

4 Put “Off” electrical power supply.

Do not allow people to go nearer to the fire

5 Analyze and identify the type of fire. Refer Table1.

Assume the fire is ‘B’ type (flammable liquefiable solids)

Table 1

Class ‘A’	Wood, paper, cloth, solid material	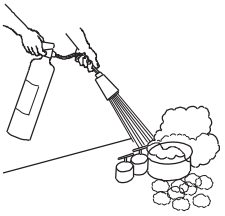
Class ‘B’	Oil based fire (grease, gasoline, oil) & liquefiable solids	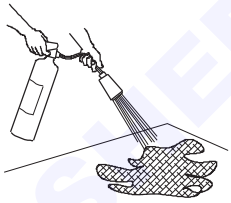
Class ‘C’	Gas and liquefied gases	
Class ‘D’	Metals and electrical equipment	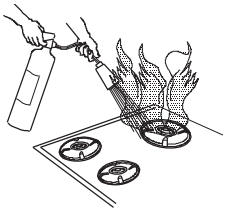

6 Select CO_2 (carbon dioxide) fire extinguisher

7 Locate and pick up CO_2 fire extinguisher. Check for its expiry date.

8 Break the seal. (Fig 2)

Fig 2

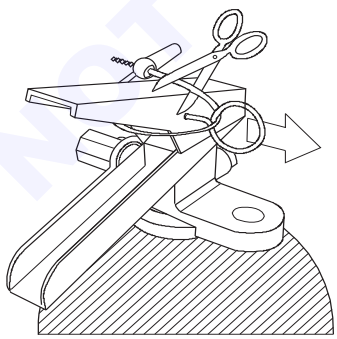

9 Pull the safety pin from the handle. (Pin located at the top of the fire extinguisher) (Fig 3)

10 Aim the extinguisher nozzle or hose at the base of the fire. (This will remove the source of fuel fire) (Fig 4)

Fig 3

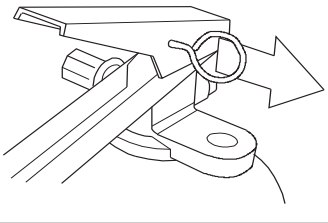

Fig 4

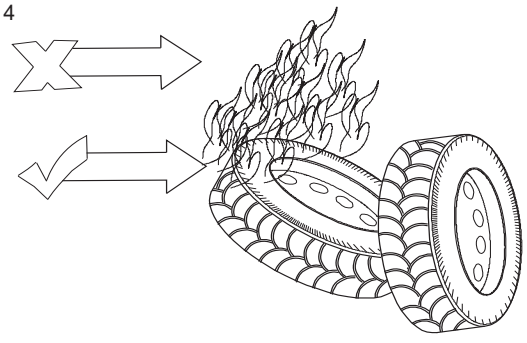

Keep your self low.

© NIMI NOT TO BE REPUBLISHED

11 Squeeze the handle lever slowly to discharge the agent (Fig 5)

Fig 5

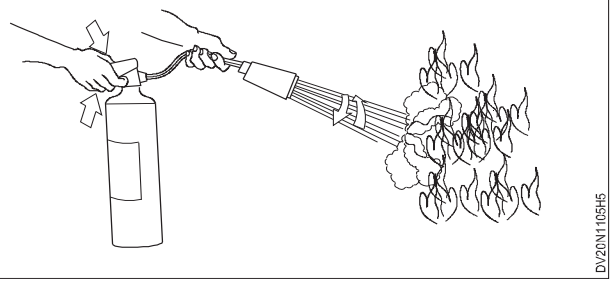

12 Sweep side to side approximately 15 cm over the fuel fire until the fire is put off.

Fire extinguishers are manufactured for use from the distance.

Caution

1 While putting off fire, the fire may flare up.

2 Do not be panic so long as it put off promptly

3 If the fire doesn't respond well after you have used up the fire extinguisher move away your self away from the fire point.

4 Do not attempt to put out a fire where it is emitting toxic smoke, leave it to the professionals.

5 Remember that your life is more important than properly. So don't place yourself or others at risk.

In order to remember the simple operation of fire extinguisher.

Remember.

P.A.S.S. This will help to use fire extinguisher.

P for pull.

A for aim.

S for squeeze.

S for sweep.

— — — — —

© NIMI NOT TO BE REPUBLISHED

Practice on arrange to obtain learner licence from concern RTO

Objectives: At the end of this exercise you shall be able to
- **obtain learner licence from concern RTO**
- **download the learner licence from official parivahan portal.**

Requirements

Tools/Instruments

- Trainee's tool kit - 1 No.
- Vehicle tool kit - 1 Set.

Equipment/Machines

- Driving simulator - 1 No.
- Light vehicle - 1 No.

Materials/Components

- Soap oil - as reqd
- Cotton waste - as reqd
- Engine oil - as reqd

PROCEDURE

TASK 1: **Obtain learner licence from concern RTO.**

Note: The instructor has to explain the necessary of learner licence and valid driving licence to every vehicle road users in our country.

1 The instructor has to explain the age limit for get driving licence as per RTO rules and regulation - Non geared vehicle - 16 years with parents permission letter - gear vehicle about 50 cc - 18 years, public transport vehicle - 20 years.

2 The instructor has to collect the following documents from their students to apply learner licence from concerned RTO.
- Adhar card
- Age proof
- Address proof
- Medical certificate
- Declaration of physical fitness certificate
- Physically challenged certificate in case of disability
- Current proof of residence
- Application form - 2 for learner licence
- Application form - 3 for driving licence

3 After collection of document from the trainee's, the instructor has to upload the documents in government official website of http:// sarathi.parivahan.gov.in/

4 Open the website in your computer and then follow the following steps
- Select the concerned state
- Click on application for new learners licence from learners licence menu
- Fill up learners licence application form - 2 following details

5 After completion of the application form upload the necessary documents by scanning.

6 After submit the application and documents proceed to payment of fees.

7 Refresh and cancel it after completion the complete the application process.

Note: The instructor has submit all the eligible trainee's documents for apply learner licence to concerned RTO near by their I.T.I.

Note: No person shall drive a vehicle in any public place unless he/she holds an effective driving licence issued by licenceing authority (RTO)

8 After submission of learner licence application through on line, concerned RTO considered the application and alot the date and time for driving test.

9 The instructor has to training the students through driving simulator for driving and road sign identification.

10 The instructor has to present the trainees for driving test at RTO office as per RTO scheduled date with their driving test fees paying slip.

11 Every trainees has to be provide their application number or copy of application and fee pay slip, RTO test scheduled letter etc.

12 Applicant should have to appear for learner test at the RTO.

13 After completion of driving test, result will, declar by the driving test examiner (RTO)

© NIMI NOT TO BE REPUBLISHED

14 On successful completion of the learner licence test you can immediately collect the learner licence registration certificate from RTO office.

15 You have to wait for a month before taking your driving test for permanent driving licence.

Note: The RTO exam consists of multiple - choice questions quizzing you about traffic rules, signs and road signals, you can find sample questions on the RTO website

FORM 2

[See Rule 10]

FORM OF APPLICANT FOR THE GRANT OF LEARNER'S LICENCE

To

The Licensing Authority,

…….

…….

Space for passport size photograph

I hereby apply for a licence authorizing me to drive as a learner, the following motor vehicle(s):-

(a) Motor cycle without gear
(b) Motor cycle with gear
(c) Invalid carriage
(d) Light Motor vehicle
(e) Transport vehicle
(f) Road roller
(g) Motor vehicle of a specified description, namely…….
(h) E-Rickshaw
(i) E-Carts

PARTICULARS TO BE FURNISHED BY APPLICANT

1 Full Name : ……

2 Son/wife/daughter of : ……

3 Permanent address : ……
(Electoral Roll / Life Insurance Policy / Passport / Pay slip issued by any office of the Central Government/ State Government or a local body / Any other document or documents as may be prescribed by the State Government / Affidavit sworn before an Executive Magistrate or a First Class Judicial Magistrate or a Notary Public to be enclosed)
……
……
……

4 Temporary address/ Official address, if any : ……
……
……

5 Duration of stay at the present address : ……

6 Date of birth : ……
(Birth certificate / School certificate / Affidavit sworn before an Executive Magistrate or a First Class Judicial Magistrate or a Notary Public to be enclosed)

7 Place of birth : ……

8 If place of birth outside India, when migrated to India : ……

© NIMI NOT TO BE REPUBLISHED

9 Educational Qualification : ……

10 Identification mark(s) : 1……

2……

11 ***

*** - S.no – 11- Omitted vide G.S.R 708(E) dated 30.08.2010

12 Blood group :

RH (Rhesus) factor :

13 I hold an effective driving licence to drive: Motor cycle/light motor vehicle/transport vehicle with effect from : ……

14 Particulars of any driving licence previously held by applicant. : ……

Whether it was cancelled and if so, for what reason : ……..

15 Particulars of any learner's licence previously held by applicant in respect of the description of vehicle to which the applicant has applied. : ……

16. Have you been disqualified for holding or obtaining driving licence or learner's licence. If so, for what reasons. : ……..

17 I enclose three copies of my recent photograph (passport size photograph) : ……

18 I enclose medical fitness certificate dated……..issued by…….(doctor).

19 I have submitted along with my earlier application for learner's licence / I enclose the written consent of parent/ guardian (in the case of applicant being a minor).

20 I enclose driving certificate dated……issued by…….

……(Name and address of the driving school).

21 I have paid the fee of Rs……..

22 I am exempted from the medical test under Rule 6 of the Central Motor Vehicles Rules, 1989.

23 I am exempted from the preliminary test under Rule 11(2) of the Central Motor Vehicles Rules, 1989.

*Strike out whichever is inapplicable.

Date…… Signature or thumb impression of Applicant

Specimen signatures or thumb impression of

Applicant

1…….

2……

Declaration under sub-section (2) of section 7 of the Motor Vehicles Act, 1988

Shri/Smt/Kumari.. …… Son / daughter of …… who is a minor is under my care and I accept responsibility for his/her driving. If at a later date I decide not to accept responsibility for his/her driving I shall intimate the licensing authority in writing for the cancellation of the licence. I give my consent for his/her obtaining learner's licence.

Signature……....

Name and full address of the parent /guardian……....

……....

……....

Relationship……....

© WWW NOT TO BE REPUBLISHED

(To be signed in the presence of the licensing authority or person authorized in this behalf by the licensing authority).

For office use

The applicant is exempted from the medical test under Rule 6 and the preliminary test under Rule 11(2) of the Central Motor Vehicles Rules, 1989. Learner's Licence may be issued.

The applicant was tested with reference to Rule 11(1) of the Central Motor Vehicles Rules, 1989. He has passed the test. Learner's Licence may be issued. Learner's Licence may be refused.

Signature of licensing authority or other person authorized in this behalf.

*Strike out whichever is inapplicable.

Note: The application along with the scanned copies of the required documents may also be sent to the concerned Licensing Authority through Electronic Mail, if allowed by the concerned State Government / Union Territory Administration.

In such cases, the Licensing Authority shall scrutinize the application and intimate the applicant about the acceptance/any discrepancy.

In case the application is accepted, the applicant shall be intimated through Electronic Mail to report to the Authority concerned on an appointed date along with the documents for further verification, submission of application fee and examination of the applicant.

— — — — —

TASK 2: **Download the learner licence from official parivahan portal**

1 Open the offical parivahan portal

2 Click on line service tab

3 Select driving licence related service from those options.

4 Select your state

5 Under the driving licence tab. Click on print driving licence

6 Enter your application number and date of birth

7 Click on the submit button

8 A new page will appear, click on the print option to download or print your learner licence

9 You can download your driving licence in the pdf format also

10 Once download you can always take the print out of the licence at any time.

Note: Even you can get a soft copy of your driving licence on your mobile phone by download the digi locker app (Create on account on this app using the mobile number mentioned in the driving licence data base)

11 The trainee's can drive the vehicle in public road after obtaining the learners licence by using ' L' board front and rear of the vehicle under motor **vehicle act 1988**.

12 Consult your instructor for further any doubts regarding licence and driving a vehicle on the national highway

— — — — —

© NIMI NOT TO BE REPUBLISHED

Practice to identify the various vehicle parts

Objectives: At the end of this exercise you shall be able to
- **check the vehicle system components**
- **identify the various vehicle parts.**

Requirements

Tools/Instruments

- Trainee's tool kit - 1 No.
- Vehicle manual - 1 No.
- Vehicle parts chart - 1 No.

Equipment/Machines

- Vehicle - 1 No.

Materials/Components

- Cotton waste - as reqd
- Soap oil - as reqd

PROCEDURE

TASK 1: **Check the vehicle systems**

1 Refer the vehicle manual and study the vehicle system components.

2 Check the vehicle body shell or frame.

3 Check the engine location and fittings.

4 Check the transmission system of the vehicle.

5 Check the steering system and control linkages.

6 Check the brakes and their construction method.

7 Check the vehicle dashboard gauges and switches

8 Check the electrical system of the vehicle.

9 Check the engine starting and stopping system.

TASK 2: **Identification of various vehicle parts (Fig 1, 2)**

1 Identify the components/parts fitted with engine like cylinder head, engine bolt, oil sump, air cleaner, inlet manifold crankcase ventilation, Turbo charger etc.

2 Identify the engine mountings and vehicle frame, body etc.

3 Identify transmission systems components like clutch, gear box, propeller shaft, differential, rear and front axle, wheel etc.

4 Identify the vehicle steering system parts like, steering wheel, column steering gear box, pitman arm, pull and pushrod, knuckle arm, tie rod etc.

5 Identify the brake system parts like, master cylinder, wheel cylinder, disc wheel, caliber unit, wheel drum, brake shoe, hand brake lever and linkage, brake pedal etc.

6 Identify the vehicle starting and charging system parts like, battery, starter motor, Alternator, 'V' belt etc.

7 Identify the suspension system parts like, coil spring, leaf spring, shock absorber rubber pad, torque rod, torsion bar etc.

8 Identify the dash board gauges and warning lights like, speedometer, RPM meter, Fuel gauge, temperature gauge, charging light, glow plug indicator side direction, indicator light, gauges light, audio system, center lock indicator, window glass operating switch, A/c system blower, compressor etc.

9 Identify the fuel system parts like, fuel tank, fuel line, fuel pump, injectors or spark plug, fuel filter, etc.

10 Identify the cooling system parts like, radiator, water pump, rubber upper and lower hose, radiator cap etc.

11 Identify the engine exhaust system like, exhaust manifold, EGR, silencer pipe, muffler box, tail pipe, catalytic converter, etc.

© NIMI NOT TO BE REPUBLISHED

Fig 1

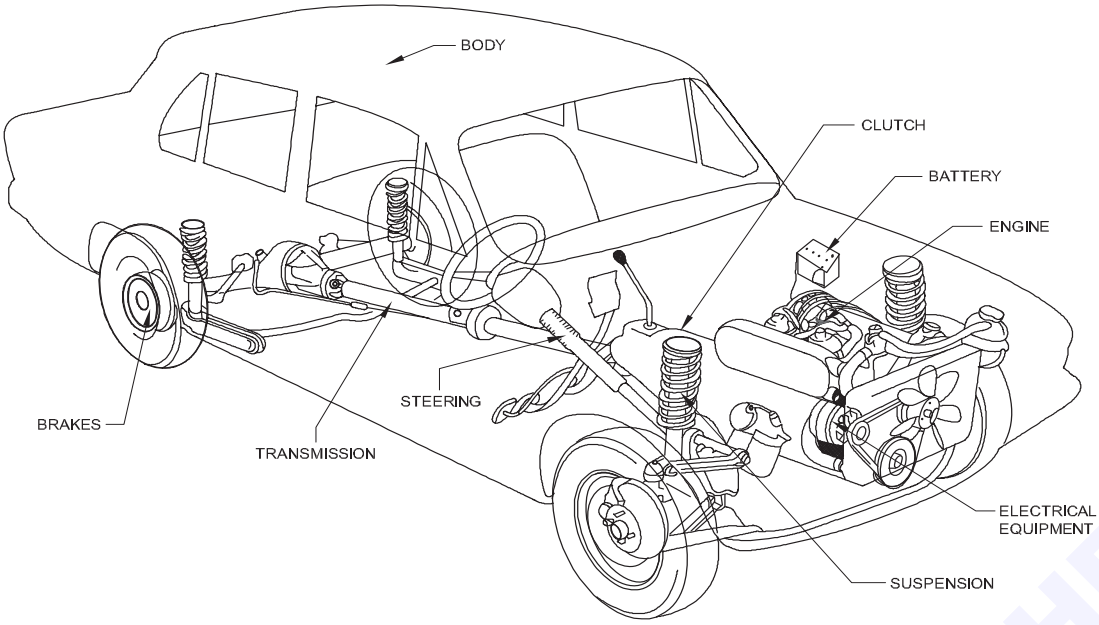

Fig 2

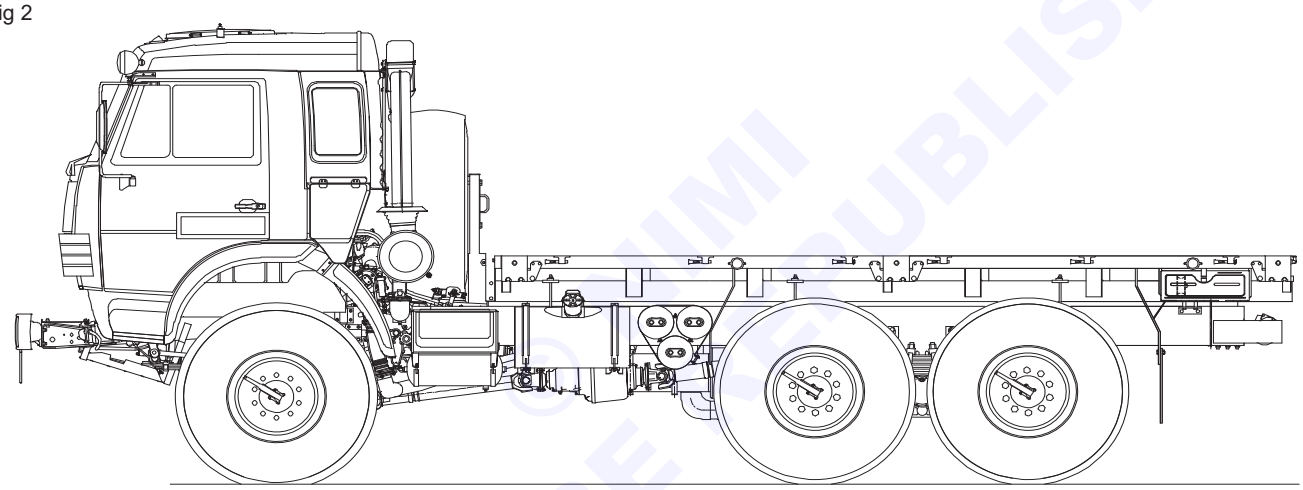

© NIMI NOT TO BE REPUBLISHED

Practice to identify the various gauges and tell tale lamps in the dash board

Objectives: At the end of this exercise you shall be able to
- **identify the various gauges fitted with dash board of the vehicle**
- **identify the various tell-tale lamps in the instrument panel (dash board)**
- **interpretation of gauge reading in the instrument panel.**

Requirements

Tools/Instruments

- Trainee's tool kit - 1 No.
- Vehicle owners manual - 1 No.

Equipment/Machines

- Vehicle - 1 No.

Materials/Components

- Cotton waste - as reqd
- Soap oil - as reqd

PROCEDURE

TASK 1: **Identify the various gauges fitted in instrument panel of the vehicle**

Note : Instructor should be indicate the various switches and gauges in a vehicle dash board.

- Park the vehicle on the workshop floor.
- Apply hand brake in the vehicle.
- Study the vehicle owners manual and compare the gauges with manual figures.
- Identify the fuel gauge and temperature gauge.
- Identify the speedometer and its reading.
- Identify RPM meter.
- Identify the oil pressure gauge.

TASK 2: **Identify the tell-tale lamp and interpretation of gauge reading, and warning light in the instrument panel**

- Start a vehicle and allow it to run the engine at idle speed.
- Sit on the driver seat and inspect the instrument panel gauges and warning lights fitted in dash board. (Fig 1)

Fig 1

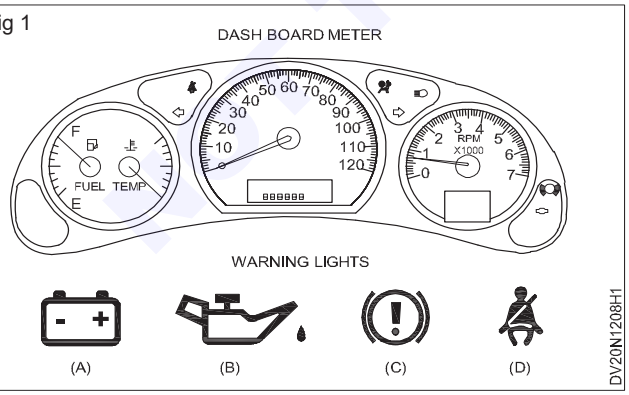

- Check the seat belt light in glowing in red if driver is not wear the seat belt.
- Wear the seat belt and check seat belt warning light indicator not glowing.
- Turn the indicator switch check the directional indication light glowing.
- While ignition switch is on check the fuel gauge reading to know fuel level in the fuel tank.
- Check the temperature gauge or warning lights to know the engine temperature while engine is running.
- Apply parking brake and check the parking brake light glows in red.
- Release the parking brake and check parking brake indicator light is not glowing in red.
- Battery light glows in red if battery discharging.
- Engine oil lights glows in red if engine oil level is low or nil.
- Check the active system lights alert you to parts of vehicle that are active red such as an open trunk or open door.
- Switch on the audio system and check the lights.
- Switch on the car A/c system and check the warning lights.
- Switch on head light or parking light, ensure the head light signal bulb glow in instrument panel and all other gauges light also glow inside the gauges.

© NIMI NOT TO BE REPUBLISHED

- Release the hand brake and move the vehicle by using different speed gear ratio at the same time check the speedometer show vehicle speed of vehicle kilometer per hour and odometer shows how many kilometer, travelled in its life time. (total distance traveled on the road.)
- Check engine RPM meter (Tachometer) while accelerate the engine the RPM meter, will show the engine RPM according to accelerator pedal apply.
- Check the gear display light shows which gear of cars currently running.
- Observe the trip meter reading (vehicle starting point to vehicle stop end point distance)
- Identify the various warning light in a modern cars as shown in Fig 2 (Observe the warning lights while operating the particular system)

Fig 2

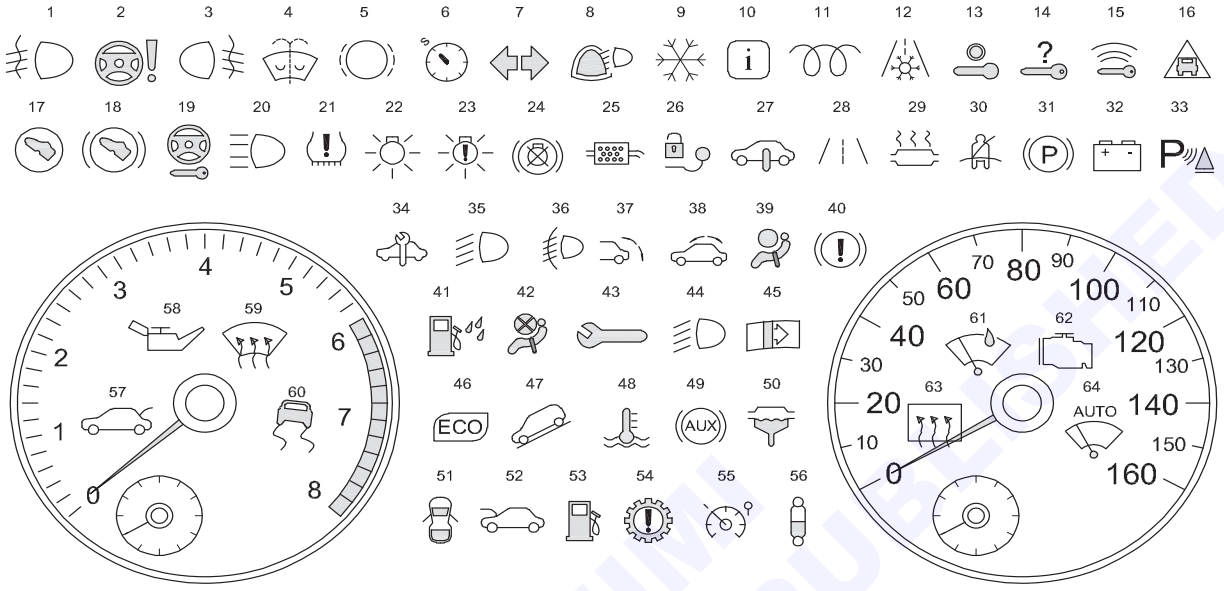

1) FOG LIGHT
2) POWER STEERING WARNING LIGHT
3) FOG LIGHT (REAR)
4) WASHER FLUID LOW
5) BRAKE PAD WARNING
6) CRUISE CONTROL ON
7) DIRECTION INDICATORS
8) RAIN AND LIGHT SENSOR
9) WINTER MODE
10) INFORMATION INDICATOR
11) GLOW PLUG/DIESEL PRE-HEAT
12) FROST WARNING
13) IGNITION SWITCH WARNING
14) KEY NOT IN VEHICLE
15) KEY FOB BATTERY LOW
16) DISTANCE WARNING
17) PRESS CLUTCH PEDAL
18) PRESS BRAKE PEDAL
19) STEERING LOCK WARNING
20) MAIN BEAM HEADLIGHTS
21) TYRE PRESSURE LOW
22) SIDELIGHT INFORMATION
23) EXTERIOR LIGHT FAULT
24) BRAKE
25) DIESEL PARTICULATE FILTER WARNING
26) TRAILER TOW HITCH WARNING
27) AIR SUSPENSION WARNING
28) LANE DEPARTURE WARNING
29) CATALYTIC CONVERTER WARNING
30) SEAT BELT NOT ON
31) PARKING BRAKE LIGHT
32) BATTERY/ALTERNATOR WARNING
33) PARKING ASSIST
34) SERVICE REQUIRED
35) ADAPTIVE LIGHTING
36) HEADLIGHT RANGE CONTROL
37) REAR SPOILER WARNING
38) CONVERTIBLE ROOF WARNING
39) AIRBAG WARNING
40) HANDBRAKE WARNING
41) WATER IN FUEL FILTER
42) AIRBAG DEACTIVATED
43) FAULT PROBLEM
44) DIPPED BEAM HEADLIGHTS
45) DIRTY AIR FILTER
46) ECO DRIVING INDICATOR
47) HILL DESCENT CONTROL
48) TEMPERATURE WARNING
49) ABS WARNING
50) FUEL FILTER WARNING
51) DOOR OPEN
52) BONNET OPEN
53) LOW FUEL
54) AUTOMATIC GEARBOX WARNING
55) SPEED LIMITER
56) SUSPENSION DAMPERS
57) OIL PRESSURE LOW
58) WINDSCREEN DEFROST
59) BOOT OPEN
60) STABILITY CONTROL OFF
61) RAIN SENSOR
62) ENGINE/EMISSIONS WARNING
63) REAR WINDOW DEFROST
64) AUTO WINDSCREEN WIPING

THE COMPLETE CAR DASHBOARD LIGHT GUIDE

DV20N1208H2

© NIMI NOT TO BE REPUBLISHED

Practice to identify and use the different types of electrical switches

Objectives: At the end of this exercise you shall be able to
- **identify the vehicle electrical switches**
- **operate the various instrument panel switches, and their functions.**

Requirements

Tools/Instruments

- Trainee's tool kit - 1 No.
- Car owner's manual - 1 No.

Equipment/Machines

- Vehicle - 1 No.

Materials/Components

- Cotton waste - as reqd
- Soap oil - as reqd
- Switches - as reqd
- Bulbs - as reqd

PROCEDURE

TASK 1: **Identify the car instrument panel switches**

- Park the car on the workshop floor.
- Apply parking brake and ensure vehicle does not move.
- Clean the vehicle and open the car bonnet cover and hold it with stopper stand.
- Check the battery connection and battery charge condition.
- Inspect the radiator water level, if need top up water.
- Inspect the car instrument panel switches and gauges.
- Identify the various switches provided in dash board.
- Identify head light dim and dipper switch.
- Identify by the indicator switch.
- Identify the wiper switch.
- Identify the horn switch.
- Identify the car A/c On/Off switches.
- Identify the door glass operating switches.
- Identify the car audio On/Off switch.
- Identify the car center lock switch.

— — — — —

TASK 2: **Operate and check the function of panel board switches**

- Switch on the head light switch and check the head light and tail glowing, if need replace it.
- Switch on to cabin light switch and check light glowing if need replace it.
- Switch on the head light switch and operate the high and low beam switch, if found any defect in switch replace it.
- Operate the parking light switch and check the all front and rear light are glowing and blinking properly if need check the wire connections or replace the switch.
- Switch on car air condition switch and check the function of switch, blower, compressor etc, if need replace the switch.
- Switch on the reading light switch and check the light glowing, if need replace the bulb or switch.
- Switch on the ignition switch and check the function whether current is supply to all other systems, if need replace ignition switch.
- Switch on the engine starter switch, check the starter motor function, if need replace the starter switch.
- Switch on the door glass operating switches operate it up and down direction and check the door glass movement, if need replace switch or motor.
- Operate the center lock switch and check the function of switch, if need replace it.
- Operate the vehicle remote control switch and check the function of it, if need replace it.
- Operate the wiper switch, horn switch, wind screen, water sprayer switch and check the function of wiper, horn, water sprayer, if need replace defective switch and other parts.

— — — — —

© NIMI NOT TO BE REPUBLISHED

Driver Cum Mechanic (LMV) - Simulator Driving and Vehicle Pre-driving Checks

Practice on simulator driving practice

Objectives: At the end of this exercise you shall be able to
- **prepare the simulator for driving practice**
- **driving practice in simulator.**

Requirements

Tools/Instruments

- Trainee's tool kit - 1 No.
- Simulator manual - 1 No.
- Road sign chart - 1 No.
- Traffic rule chart - 1 No.

Equipment/Machines

- Driving simulator - 1 No.
- LED Screen - 1 No.

Materials/Components

- Cotton waste - as reqd
- Soap oil - as reqd

PROCEDURE

TASK 1: **Prepare the simulator for driving practice. (Figs 1 & 2)**

1 Refer the simulator manual for operate the driving simulator.

Note : Instructor has to introduce the simulator to the trainee's and educate them to operating and driving methods of driving simulator.

2 Visual check the driving simulator parts and their connections.

3 Study the simulator manual to identify the control switches and parts of the simulator.

4 Study the simulator's mechanical and electrical operations.

5 Study the simulators input and output devices.

6 Study the simulator vehicle pedal, steering and gear lever operating methods.

7 Study the theory lessons while learning drive the vehicles.

Fig 1

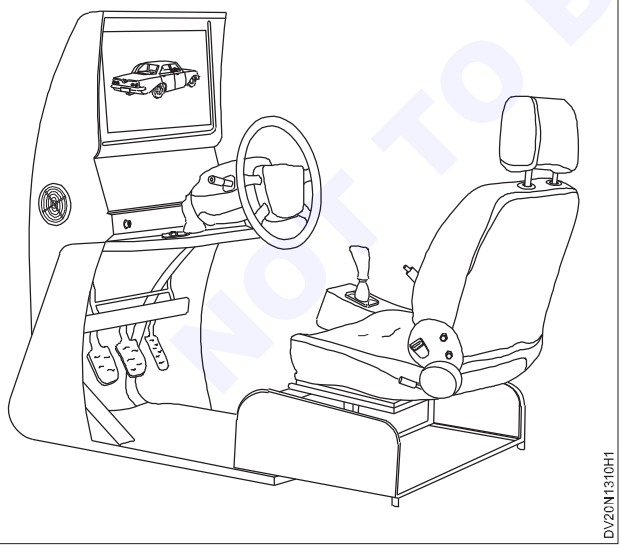

Fig 2

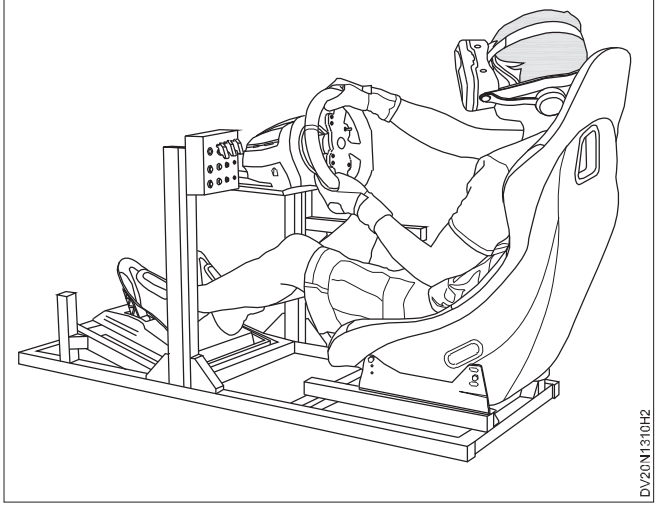

— — — — —

© NIMI NOT TO BE REPUBLISHED

TASK 2: **Drive in a driving simulator (Fig 1)**

Fig 1

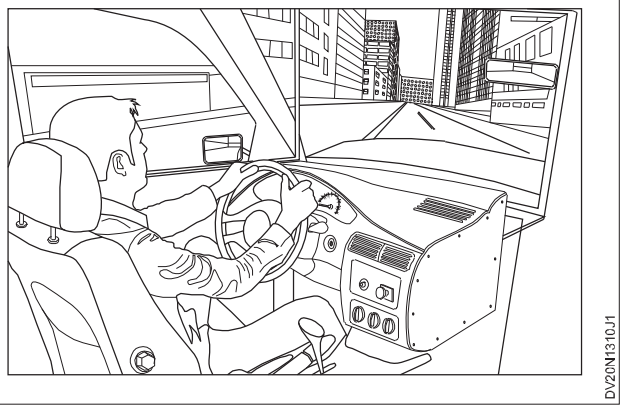

1 Prepare the driving simulator.

2 Switch on the simulator system and ensure the simulator and video screen is power ON.

3 Learn vehicle control tasks including handling the steering wheel by using the clutch and brake pedal, shifting gears, visually scanning the road and using turn signals as per your instructor's guide line.

4 Practice to drive the simulator vehicle by apply accelerating and braking.

5 Practice to use the simulator to drive in a down town area with lot of pedestrian foot traffic to practice braking for pedestrians suddenly walking into the street.

6 Practice to braking for stop signs and red traffic lights to get used to braking slowly and in a controlled manner.

7 Use traffic sign sceneries to practice responding to different signs while driving practice in driving simulator.

8 Practice to turning and changing lanes of the vehicle by using your turn signals.

9 Avoid going over the speed limit on the highway.

Note : Driving simulator will not remove distractions from real world driving, simulator can help develop a sense of self awareness about risk taking and impulsivity that learners can bring to their driving experience only.

10 Practice to park your simulator car in a different type of parking area.

11 Practice to park the simulator car common parking scenarios including front drive parking, diagonal parking, parallel parking and reverse parking the vehicle.

12 Practice to gain experience with driving in manual and automatic gear settings in simulator car.

13 Practice to drive the simulator car with lot of other cars around your car.

14 Practice the simulate driving at night to get accustomed to driving in darker settings.

15 Practice the simulator car drive in raining conditions to experience driving on slipping surface.

16 Practice to drive the simulator car in snow area.

17 Practice to drive the simulator car in hilly area.

18 Practice to drive the simulator car on rural roads sharp curves and narrow roads to better understanding of your car actual distance from cars passing on your left.

19 Practice to drive on a simulated highway under stress.

20 Practice to drive on a simulated driving in busy crowded city centers.

21 If you are satisfied in your driving practice, stop the drive simulator and switch off the simulator power connection.

22 Note down the driving simulator parts and their function in Table 1

Table 1

S. No.	Simulator parts name	Function of the parts	Used by human parts.
1	Steering wheel	Control the vehicle movement	Both hands
2	Clutch	Transmit the engine power	Left leg
3	Brake		
4	Accelerator		
5	Parking brake		
6	Gear shift lever		

— — — — —

© VHE NOT TO BE REPUBLISHED

Driver Cum Mechanic (LMV) - Simulator Driving and Vehicle Pre-driving Checks

Practice on initial freeway driving

Objectives: At the end of this exercise you shall be able to
- **initial freeway driving practice on driving simulator.**

Requirements

Tools/Instruments

• Trainee's tool kit	- 1 No.
• Driving simulator manual	- 1 No.
• Road signal chart	- 1 No.
• Traffic rule chart	- 1 No.

Equipment/Machines

• Driving simulator	- 1 No.

Materials/Components

• Cotton waste	- as reqd
• Soap oil	- as reqd

PROCEDURE

Initial freeway driving practice in driving simulator.

1 Prepare the driving simulator for driving practice.

2 Refer the driving simulator's manual for operating instruction.

3 Read the simulator operating instruction carefully.

4 Sit on the simulators driver seat. (Fig 1)

5 Wear the seat belt.

6 Switch on the driving simulator for driving practice and set on a freeway section of simulator.

7 Identify the steering, brake pedal, gear lever, clutch other controls and warning system.

8 Switch on the simulator software system.

9 Select the type of vehicle and road drive systems.

10 See the video screen.

11 Apply clutch pedal and engage the gear.

12 Select the vehicle move button and ensure the vehicle is free moving on the road.

13 Control the vehicle speed while meet the rub and tub road, speed breaker, turning, road signs, road crossing etc.

14 Use the smart traffic systems.

15 Make your vehicle acceleration quicker, speed higher, handling better and brakes faster in free highway.

16 Drive practice day and night time cross the vehicle in turning road, tunnels and bridge passing the vehicle.

17 While drive the driving simulator use the day and night mode and use the smart traffic systems like, road signals, traffic signal, hand signal, etc.

18 Always practice to drive the vehicle in left side of the road otherwise overtake the vehicle.

19 While drive the simulator vehicle follow the system's instructions for speed control.

20 Drive the vehicles straight line from it tail end to head and vehicle freeway driving.

21 Keep in your mind, safety distance of vehicle, affected distance feasible vehicle passing distance, critical distance and extreme distance of the vehicle to vehicle.

22 Follow the lane changing and overtaking lane changing, needs to judge the distance and concerning the vehicle in front of your vehicle only if the distance is shorter than the affected distance and the speed is not lower than that of the front car, the driver will choose to overtake the car.

23 Once you chooses to overtake, you should be determine, whether the conditions of passing are satisfied. The vehicle passing behavior is permitted overtake the vehicle.

Note :

Simulator operating method as follows.

Opening → system overview → Driving simulator device on → Drivers profile → Course (Driving) selection → safety device selection → Driving → Result.

The simulator analysis the driving log and creates printable reports. Following points are the analysis on safe driving behavior.

1 Acceleration aggressiveness from acceleration graph and rapid acceleration trend beyond the set value.

© NIMI NOT TO BE REPUBLISHED

2 Braking severity from deceleration graph, braking severity trend beyond the set value.

3 Number of lane changes show unnecessary lane change.

4 Abrupt steering trend from the steering abruptness beyond the set value.

5 Result shows each driver's score on appropriate speed, head way distances, and lane changes according to the logged data set in simulator.

6 Result shows the adhoc ranking of the driver.

7 Result also indicate the mistakes done during initial highway driving practice.

Fig 1

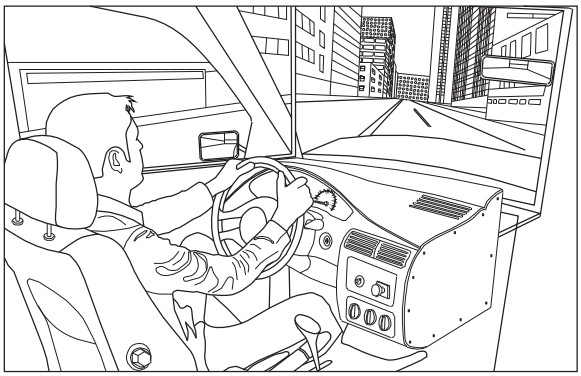

© NIMI
NOT TO BE REPUBLISHED

Driver Cum Mechanic (LMV) - Simulator Driving and Vehicle Pre-driving Checks

Practice on vehicle pre-driving checks

Objectives: At the end of this exercise you shall be able to
- **check the vehicle before sitting on driver seat**
- **check the vehicle after sitting on driver seat.**

Requirements

Tools/Instruments

- Trainee's tool kit - 1 No.
- Vehicle owner's manual - 1 No.

Equipment/Machines

- Running vehicle - 1 No.

Materials/Components

- Cotton waste - as reqd
- Soap oil - as reqd
- Lube oil - as reqd
- Coolant - as reqd
- Grease - as reqd

PROCEDURE

TASK 1: **Check the vehicle before sitting on driver seat**

1 Park the vehicle on the driving spot and apply hand brake.

2 Apply wooden block front and rear of the tyre (wheel chock)

3 Clean the vehicle.

4 Check the tyre pressure and tyre condition (Fig 1)

Fig 1

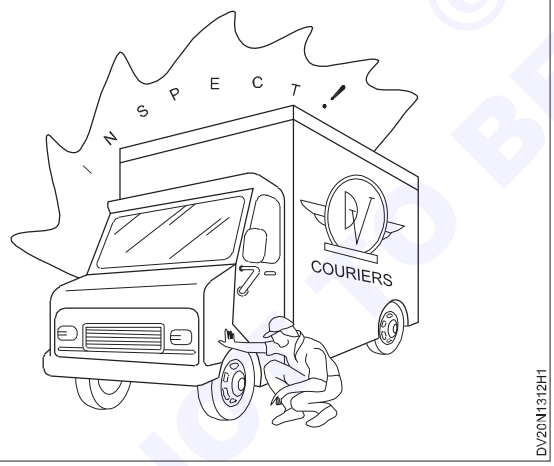

5 Check the spare tyre provided with vehicle.

6 Check the vehicle tools like, tyre lever, jack and other tool kit.

7 Check vehicle nut and bolts tightness.

8 Check the leaf spring fittings.

9 Check the shock absorber mountings.

10 Check the wheel mountings.

11 Check the Radiator water level and water condition.

12 Check the Engine oil level if need top up.

13 Check the battery terminals and battery charge condition.

14 Check inside of vehicle and lights in and outside fittings.

15 Check the brake fluid level in the master cylinder.

16 Check the fuel level in the fuel tank.

17 Check the emergency equipment with in a vehicle.

— — — — —

TASK 2: **Check the vehicle after sitting on the driver seat**

1 Open the vehicle door and sit on the driver seat.

2 Insert the ignition key in ignition switch.

3 Switch on the ignition key.

4 Check the dash board gauges and warning lights.

5 Identify and study the various type of switches provided on the dash board.

6 Identify the horn, wiper, wind screen, water sprayer , switches.

7 Identify the head light switch, indicator switch, dim and dipper switch.

8 Check the brake and clutch pedal free play.

9 Check the hand brake.

10 Check the audio system provided in vehicle dash board.

11 Check the car A/c system.

12 Check and set the vehicle rear view mirror and side mirror.

© NIMI NOT TO BE REPUBLISHED

13 Check the vehicle rear view camera if provided with vehicle.

14 Check the function of lights (headlight, parking light, brake light, traffic indicator, fog light, cabin light etc.)

15 Check the fuel gauge, temperature gauge, speedometer, odometer tachometer, ammeter, oil pressure gauge etc.

16 Check the steering movement.

17 Check the gear shift lever.

18 Check the seat belt and seat adjustment lever.

19 Check the door glass operating system

20 Check the automatic door lock system.

— — — — —

© NIMI
NOT TO BE REPUBLISHED

Driver Cum Mechanic (LMV) - Simulator Driving and Vehicle Pre-driving Checks

Practice to check the document pertains to the driver and vehicle

Objectives: At the end of this exercise you shall be able to
- **check the vehicle documents**
- **check the documents pertains to the driver.**

Requirements

Tools/Instruments		Materials/Components	
• Trainee's tool kit	- 1 No.	• Cotton waste	- as reqd
• Vehicle log book	- 1 No.	• Soap oil	- as reqd
• Driving license	- 1 No.		
Equipment/Machines			
• Running vehicle	- 1 No.		

PROCEDURE

TASK 1: **Check the document pertains to the vehicle**

1 Park the vehicle on the level place.

2 Apply hand brake of the vehicle.

3 Open the dash board and remove the vehicle documents.

4 Check Vehicle Registration certificate (RC) Smart card, (Vehicle Registration No., Engine Number, Vehicle model, Gear of manufacturing, Registration etc.)

5 Check the vehicle pollution under control certificate.

6 Check the vehicle log book for repair and periodical maintenance records of vehicle.

7 Check the vehicle trip sheet.

8 Check the vehicle owners manual along with vehicle.

9 Check the vehicle insurance particulars provided with insurance copy. (Insurance coverage, insurance period etc.)

10 Vehicle valid permit.

— — — — —

TASK 2: **Check the document pertains to the driver while driving a vehicle**

1 Drivers valid driving licence.

2 Vehicle Registration certificate Xerox copy.

3 Vehicle valid insurance Xerox copy.

4 Vehicles log book (Maintenance record)

5 Vehicle owner manual.

6 Material sales invoice.

7 Warranty card.

8 Vehicle trip sheet.

9 Vehicle fast tag with sufficient amount balance.

— — — — —

© NIMI NOT TO BE REPUBLISHED

Driver Cum Mechanic (LMV) - Simulator Driving and Vehicle Pre-driving Checks

Practice to adjust the driver seat and rear view mirror

Objectives: At the end of this exercise you shall be able to
- **adjust the driver seat**
- **adjust the rear view mirror**
- **adjust the seat and wearing seat belt.**

Requirements

Tools/Instruments

• Vehicle tool kit	- 1 No.
• Trainee's tool kit	- 1 No.
• First aid kit	- 1 No.
• Vehicle document	- 1 No.

Equipment/Machines

• Vehicle	- 1 No.

Materials/Components

• Cotton waste	- as reqd
• Soap oil	- as reqd

PROCEDURE

TASK 1: **Driver seat adjustment practice**

1 Park the vehicle on the ground.

2 Clean the vehicle.

3 Check the vehicle pre-driving check (engine oil, coolant, tyre pressure, battery, fuel level) etc.

4 Open the door and sit on the driver seat.

5 Check the seat comfortability if need adjust the seat by operating the seat adjusting lever.

6 Move the seat forward or reverse and set in proper position.

7 Lock the seat adjusting lever.

8 Ensure the driver seat is properly adjusted and seat adjusting lever is locked.

9 Bring the driver seat belt and wear it properly as direction given in owner's manual. Follow the method of seat belt wearing.
- Always you sit as upright on the car seat position properly.
- Pull the shoulder strap across your body, with your hand close to the seat belt reach up by your shoulder and grasp the seat at the metal latch, pull it across your body towards your hip on the opposite side as the arm you are using the seat belt buckle is located at the opposite tip.

Note : Ensure the seat belt webbing is not twisted for the most comfortable wear.

10 Locate the seat belt buckle with your other hand.

11 Grasp the buckle and make sure the slotted top end is pointed upwards with the release button on the side away from you.

Note : In the event of collision or even just for an easy release when you are exiting the vehicle, it is important that the seat belt buckle button is on the outside part of the seat belt buckle , or it can be difficult to access and release.

12 Insert the seat belt, you should hear a click sound when the buckle fully engages and locks onto the seat belt latch.

13 Make sure you are fully secured, pull on the seat belt at the buckle to make sure it is fully secured.

14 Adjust the shoulder belt to your body.

15 Tighten the belt at the hips. (Figs 1 - 5)

16 At end of this exercise follow the following seat setting and sitting position as shown in Fig 6

Fig 1

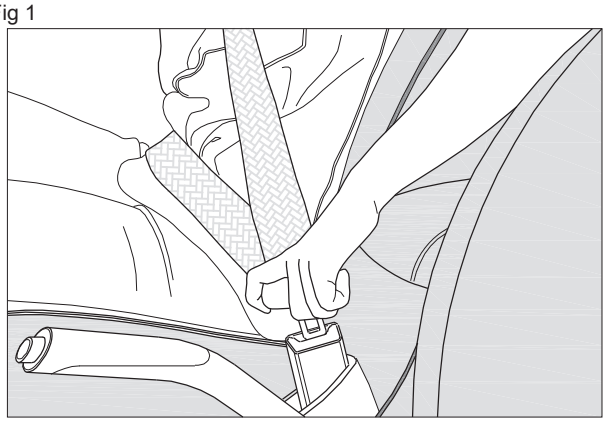

© NIMI NOT TO BE REPUBLISHED

Fig 2

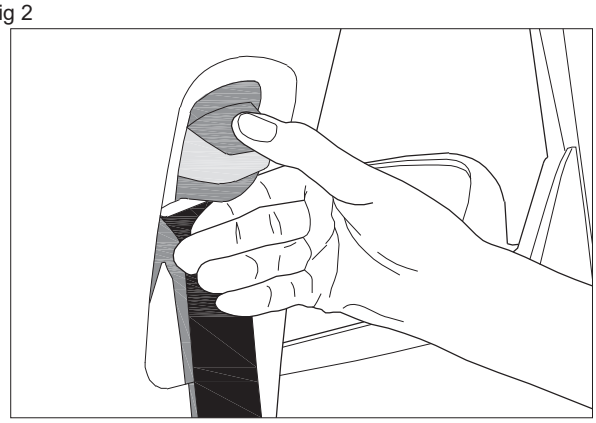

DV20N1314H2

Fig 3

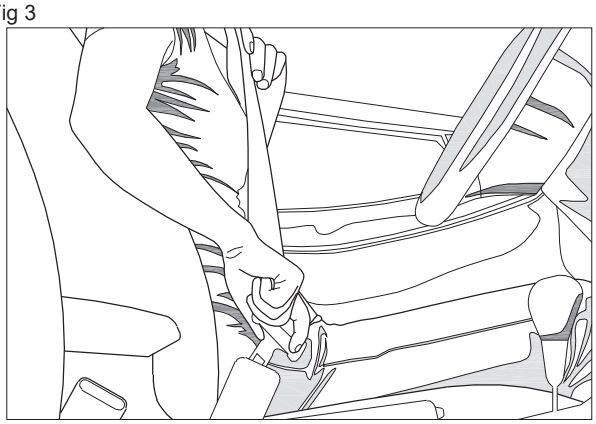

DV20N1314H3

Fig 4

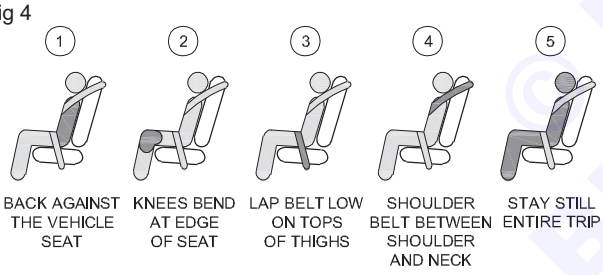

DV20N1314H4

Fig 5

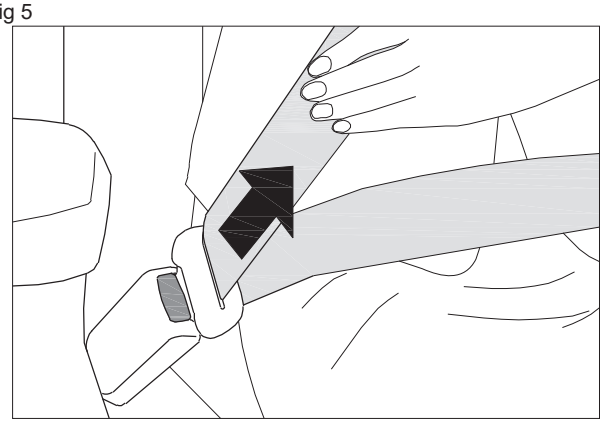

DV20N1314H5

Fig 6

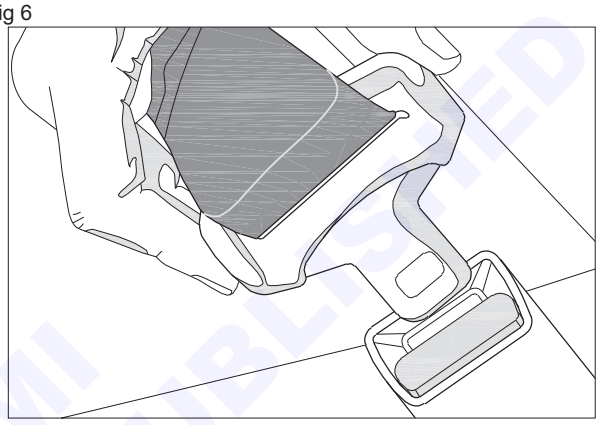

DV20N1314H6

TASK 2: **Practice on car rear view mirror adjustment**

1 Sit on the driver seat properly and adjust the seat for comfortable drive.

2 Clean the rear view mirror.

3 Adjust rear view mirror for look and get behind the car.

4 Adjust the mirror to the entire rear window is visible from the driver seat without needing to move your head.

5 If you want to reposition the rear view mirror up and down this raise the bottom of the mirror 1 to 2 inches and can substantially reduce a major blind spot that many taller drivers experience.

6 After setting the rear view mirror don't disturb the mirror setting.

7 Adjust the driver side view mirror for visible the behind up coming vehicle.

8 Adjust the left and right side view mirror by manual or if remote control system is provided with your vehicle use the remote to adjust both side mirror.

9 Ensure the both side view mirror setting should be barely see the side of the car from driver's seat position and rear view mirror and both side mirror adjustment must be in best possible visibility while drive the vehicle day/night.

© NIMI NOT TO BE REPUBLISHED

Driver Cum Mechanic (LMV) - Simulator Driving and Vehicle Pre-driving Checks

Practice to start the vehicle

Objectives: At the end of this exercise you shall be able to
- **start the vehicle.**

Requirements

Tools/Instruments

- Trainee's tool kit - 1 No.

Equipment/Machines

- Running vehicle - 1 No.

Materials/Components

- Cotton waste - as reqd
- Soap oil - as reqd

PROCEDURE

Procedure for start the driving vehicle

1 Select the vehicle for driving practice.

2 Clean the vehicle before start the vehicle.

3 Check tyre air pressure of all wheel.

4 Ensure all the tyre air pressure is as specified air pressure recommended by vehicle manufacturers.

5 Check the tyre condition and ensure the tyres are in road run condition.

6 Check the all nut bolts for tightness if found any looseness tighten it or replace it.

7 Check the fuel level if need top up.

8 Check the coolant in radiator, if need top up coolant.

9 Check the engine oil level, if need top up.

10 Check the battery condition if need recharge the battery.

11 Check the brake fluid level if need top up.

12 Check the fan belt tension.

13 Check the brake system (hydraulic brake, air brake, power assisted brake system.)

14 Check the steering system (manual power steering)

15 Connect the battery terminal and tighten it.

16 Insert the ignition key and switch on the main switch.

17 Check the dash board instrument panel warning light information.

18 Check the all type of switches functions.

19 Check the all type of lights (head light, indicator, brake light fog light, parking light, cabin light and other extra fitting lights etc.

20 Check the wiper and wiper shield washers functions.

21 If diesel vehicle check the glow plug function.

22 Push the start button for start the engine, after start the engine release the start button/ key start.

23 Let allow the engine to run in idle speed.

24 Check the oil pressure gauge and temperature gauge function.

25 If engine run smoothly after few minutes switch off the engine.

26 Again practice to start the engine

27 As above method do practice for start the engine at least three or four times for improve your vehicle starting and stopping skills.

© NIMI NOT TO BE REPUBLISHED

Driver Cum Mechanic (LMV) - Simulator Driving and Vehicle Pre-driving Checks

Practice to check the air leaks of tyres in between the vehicle journey

Objectives: At the end of this exercise you shall be able to
- **check the air leaks of tyres in between the vehicle journey.**

Requirements

Tools/Instruments

• Trainee's tool kit	- 1 No.
• Vehicle owners manual	- 1 No.
• Vehicle tool kit	- 1 No.
• Air pressure gauge	- 1 No.

Equipment/Machines

• Vehicle (LMV)	- 1 No.

Materials/Components

• Cotton waste	- as reqd
• Soap oil	- as reqd
• Valve for tube	- as reqd
• Air lock rubber stick	- as reqd
• Hot patch	- as reqd
• Rubber stick solution	- as reqd
• Emery sheet	- as reqd

PROCEDURE

Method of check the air leaks of vehicle tyres in between journey

1 Prepare the vehicle for journey.

2 Check the air pressure of all tyres in the vehicle.

3 Use the tyre pressure gauge to check the tyre in air pressure.

4 Compare the tyre air pressure with owner's manual mentioned air pressure, normally tyre air pressure list (sticker) is pasted next to the driver door (New vehicle's only)

Note : Recommended tire pressure for safe driving in high way is given in owner's manual. Tyre air pressure is vary vehicle to vehicle, generally tyre pressure is used in tyre is 30 to 35 PSI (pound square inch) Never below 20 PSI or you risk serious tyre damage.

5 Don't run the vehicle over inflated or under inflated tyre air pressure.

6 Some new vehicle come with pre-installed a tyre air pressure monitor, you can monitor the tyre pressure during the vehicle drive.

7 When vehicle is driving vehicle pull to left side mean, left side wheel air pressure less than right side of the vehicle.

8 If vehicle is pull to right side means right side wheel tyre air pressure is less than left side tyre.

9 If dash board tyre air pressure monitor is provided in the vehicle, can be monitor the all tyre pressure while vehicle running.

10 If found less air pressure during vehicle journey stop the vehicle near the tyre air filling station and fill the air as specified limit by vehicle manufactures.

11 Suppose if found one tyre is puncture, remove the punctured tyre and fit the spare wheel. Place the tyre for repairing and refill the air pressure in repaired tube less tyre or with tube tyre. (Fig 1)

Fig 1

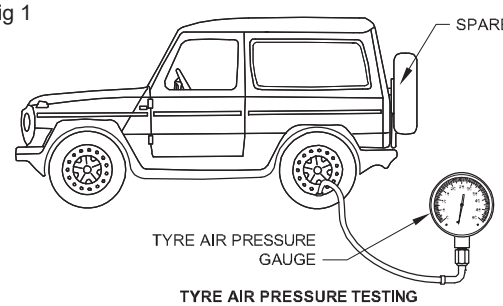

TYRE AIR PRESSURE TESTING

NOT TO BE REPUBLISHED

Driver Cum Mechanic (LMV) - Simulator Driving and Vehicle Pre-driving Checks

Practice to parking the vehicle with safety checks

Objectives: At the end of this exercise you shall be able to
- **parking the vehicle with safety checks**
- **complete the paper works.**

Requirements

Tools/Instruments

- Trainee's tool kit - 1 No.
- Wheel chock - 4 Nos.

Equipment/Machines

- Vehicle - 1 No.

Materials/Components

- Cotton waste - as reqd
- Soap oil - as reqd

PROCEDURE

TASK 1: **Apply safety locks and wheel chocks of the vehicle**

1 Stop the vehicle running after long driving practice.

2 Park the vehicle in vehicle parking area.

3 Close the all door glass.

4 Stop the engine running.

5 Switch off the main ignition switch.

6 Remove the key from the vehicle.

7 Ensure all electrical system of vehicle is closed.

8 Apply hand brake.

9 Apply front and rear wheel chokes.

10 Operate the remote key for lock the doors and centre lock.

11 Ensure all the door locks are properly locked and vehicle is safe mode.

12 If sensors not provided in a vehicle, lock the all doors manually.

13 Before leave the vehicle, ensure the vehicle main switch is in OFF position and all doors are locked properly.

— — — — —

TASK 2: **Paper work after complete the driving practice**

1 Note the km running before start the journey and after completion of journey.

2 Note the total km travelled on the road and other places.

3 Note the place of starting and ending point.

4 Note the work done between long journey.

5 Note the spare parts used between long journey.

6 Note the fuel top up between the journey.

7 Note the number of break down between long journey.

8 Note the work to be done before start the next driving practice.

9 Note the fuel level in fuel tank.

— — — — —

© NIMI NOT TO BE REPUBLISHED

Driver Cum Mechanic (LMV) - Simulator Driving and Vehicle Pre-driving Checks

Perform clutch practice on the driving vehicle

Objectives: At the end of this exercise you shall be able to
- **perform clutch apply and release practice**
- **proper clutch balancing.**

Requirements

Tools/Instruments

- Trainee's tool kit - 1 No.
- Vehicle tool kit - 1 No.
- First aid kit - 1 No.

Equipment/Machines

- Vehicle - 1 No.
- Fire extinguisher - 1 No.
- Driving stimulator - 1 No.

PROCEDURE

Driving vehicle clutch operation and clutch balancing

1 Park the vehicle on the driving area.

2 Clean the vehicle with soft cloth.

3 Check the oil level in oil sump.

4 Check the water level in the radiator.

5 Check the fan belt tension.

6 Identify the clutch and brake pedal location of the vehicle.

7 Identify the accelerator pedal fitting location.

8 Identify the gear shift lever.

9 Open the vehicle door and sit on the driver seat.

10 Put your hand finger grip on the steering wheels.

11 Put your left leg on the clutch pedal.

12 Put your right leg on the brake pedal.

13 Practice to press and release the clutch pedal by left leg.

14 Press the clutch pedal slowly.

15 Release the clutch pedal slowly with balance your leg

16 Operate the clutch pedal again and again, until your satisfaction or self confident to balancing the clutch pedal according driving condition.

Note :

1 Instructor should be given introduction about the function of clutch, brake, accelerator functions and method of pedal pressing and releasing.

2 Instructor should be given the instruction of sitting position on the driver seat.

Fig 1

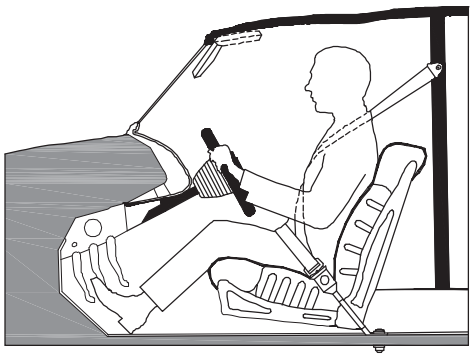

DV20N1318H1

— — — — —

NOT TO BE REPUBLISHED © NIMI

Driver Cum Mechanic (LMV) - Simulator Driving and Vehicle Pre-driving Checks

Perform steering practice to develop judgement for vehicle driving

Objectives: At the end of this exercise you shall be able to

- **operative a vehicle steering to drive on a straight with correct judgement**
- **operate a steering to develop judgement for left and right**
- **operate a steering to develop judgement for figure '8' shaped road bend.**

Requirements

Tools/Instruments

- Trainee's tool kit - 1 No.
- Driving guide book - 1 No.
- Steering system chart - 1 No.
- Road signal chart - 1 No.

Equipment/Machines

- Vehicle (LMV) - 1 No.

Materials/Components

- Cotton waste - as reqd
- Soap oil - as reqd

PROCEDURE

TASK 1: **Operate the vehicle on straight line with correct judgement**

Note:

1 The instructor has to park the Light Motor Vehicle in plain ground and explain about steering system and their function to trainee's.

2 Demonstrate the skills to be develop and operate the steering while drive the vehicle.

3 Instructor should be show demo on the vehicle for operate the vehicle steering system for each type of track drive straight on the road, `U' turn, left turn, right turn and figure `8' shaped bend.

1 Clean the vehicle after demo given by the instructor.

2 Identify the steering system parts provided with vehicle.

3 Identify the steering parts location and know the function of each parts.

4 Thoroughly check the vehicle tyre pressure, nut bolt tight engine oil level, radiator coolant level, battery condition and other vehicle systems. (Steering, brake, clutch, ignition light suspension system and fuel system etc.)

5 Ensure the vehicle is fit for driving practice.

6 Start the vehicle engine and let it allow to run in idle speed.

7 Sit on the driver seat and adjust seat position for your comfortable driving position.

8 Wear seat belt for your safety drive.

9 Adjust the rear view and side view mirrors for watch the vehicle behind coming vehicles.

10 Put your both hands on the steering wheel.

11 Practice to move the steering wheel left and right on standing vehicle.

12 Put your left leg on clutch pedal and practice to operate the pedal pressing and releasing until your satisfaction.

13 Put your right leg on brake pedal. (right leg is used for operate the brake pedal and accelerator)

14 Identify the gear leaver and shifting the gear by using your left hand.

15 Press the clutch pedal and engage the 1st gear, slowly level the clutch pedal, simultaneously gradually raise the accelerator pedal for increase the engine speed.

16 Keep your eye in front of your vehicle in straight line.

17 move the vehicle without fear.

18 Practice to stop the vehicle by release the accelerator pedal and pressing the brake pedal to slow down the vehicle.

19 Press the clutch pedal and move the gear lever to neutral position.

20 Ensure the gear is in neutral position and then apply foot brake for brake down the vehicle speed.

21 Ensure the vehicle wheel rotation is stopped and then release the brake and clutch pedal.

22 Apply hand brake while parking the vehicle. (Fig 1)

© NIMI NOT TO BE REPUBLISHED

Fig 1

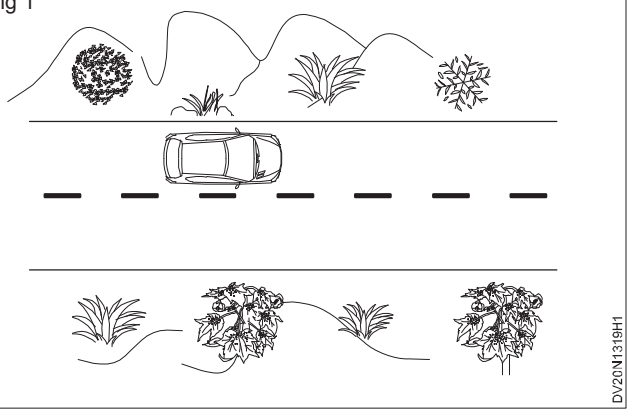

23 Again release the hand brake, press clutch pedal and engage the 1st gear, slowly release the clutch pedal and simultaneously press the accelerator pedal for smooth vehicle move, your eyesight should be straight line track judgement.

24 As above method practice the develop straight line judgement of vehicle track till you satisfied.

TASK 2: **Operate the steering for vehicle right/left turn on the road**

1 Make a track on the bare ground to driving to left and right turn practice.

2 Instructor to be park the vehicle on the prepared track marking in the ground.

3 Pre check the vehicle before starting it, as learned in previous exercise.

4 Sit on the driver seat and adjust the side and rear view mirrors.

5 Adjust the driver seat for comfort driving.

6 Check the mirrors, windshield wipers, panel gauges horn etc.

7 Check the turn lights, and head lights low and high beam.

8 Check the brake lights.

9 Check the hand brake, clutch, steering functions.

10 Wear the seat belt for self safety.

11 Start the engine by operating a main ignition switch key.

12 Release the parking brake and ensure the engine is running in safe condition.

13 Press the clutch and engage the 1st gear.

14 Release the clutch pedal simultaneously gradually raise the accelerator pedal for vehicle smooth mode.

15 Move the vehicle straight way on the marked track till vehicle left or right turn marking.

16 Allow a larger turning radius, while turn your vehicle left or right side.

17 Allowing about half the length of your vehicle to corner before beginning your vehicle turn otherwise wheel may be run over the curb in right turn or crowd the lane going the opposite direction in left turn.

Right turn the vehicle

1 Use turn signal light or hand signal before braking to turn right and up to 500 feet on the highway.

2 Watch you mirror closely for any vehicles, pedestrian or bicycle that might be in your path when you turn your vehicle left or right direction.

3 Be prepared to stop until you are sure that any potential hazard has cleared out of the way.

4 Slow down your vehicle before turn on the road/ track.

5 When you turn your vehicle to right direction, stay as close to the right hand edge of the road as you can get into a gear that will carry you through the turn without shifting gear. (Fig 1)

Fig 1

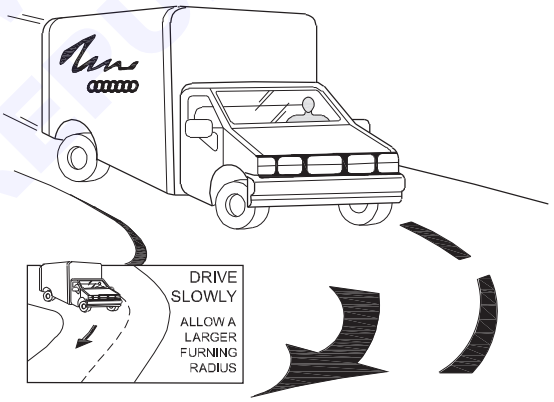

6 While turn your vehicle both hands must be on the steering wheel.

7 Continue to check your blind spots as your turn.

8 Drive slowly enough that you don't need to brake during the right turn of your vehicle.

9 After turning your vehicle switch off the signal light.

10 After turn straighten the steering wheel for straight lane drive.

Vehicle left turn

1 Of the two directions of your vehicle, left turn is very risk. While because left side turning as into your blind side.

2 While turn your vehicle towards left direction, you can't see a thing except with your outside mirrors.

3 Before turn your vehicle to left direction, you should apply left direction indicator signal light.

© NIMI NOT TO BE REPUBLISHED

4 Change the road lane to left side lane mark.

5 Slow down the vehicle speed by applying brake and shifting gear ratio.

6 Keep your eye on left out side mirror. So you can be sure that you are crowding the lane next to the one you are turning into left.

7 Drive slowly enough that you don't need to brake during a turn support if you apply brake the vehicle will be pulled outward during a turn.

Note: The large vehicle tend to have a higher center of gravity. The weight of the vehicle is pulled out ward during fast turning. The faster the turn, than greater the centrifugal force, with its potential for causing the vehicle skid or even roll over.

8 Turn your vehicle more carefully, about checking.

9 While turn your vehicle both hands should be on the steering wheel.

10 After turning your vehicle straighten the steering wheel to drive the vehicle in straight lane of the road.

11 Switch off the indicator light.

Note: When your vehicle is drive in right, use the head light dipper light, while turn left or right bend road. (Fig 2)

Fig 2

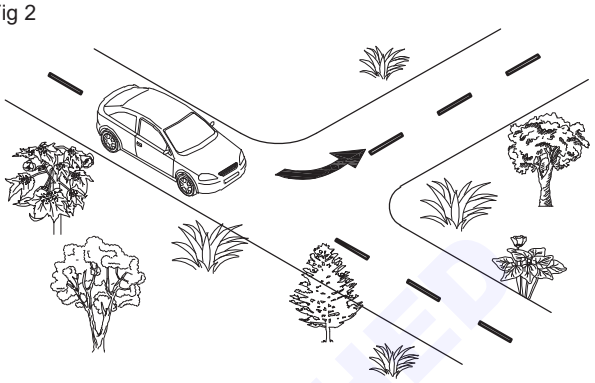

— — — — —

TASK 3: **Vehicle turn on Figure `8' shaped bend road**

1 Mark the figure `8' shaped track on the ground.

Note:

1 Instructor should be park the vehicle on the track to be driving practice.

2 Instructor should be give on figure `8' shaped tracked drive to the trainees (traffic signal, gear shifting, braking steering movement, eyesight toward road, hand and foot functions while drive the vehicle etc).

2 Check the vehicle before start as you learned in previous exercises.

3 Sit on the driver seat and adjust it for comfortable drive.

4 Adjust the mirrors (rear view mirror and side mirror)

5 Wear seat belt properly.

6 Ensure vehicle door's are closed and properly locked.

7 Ensure the engine running is very smooth and dash board instrument panel warning light and gauges are working properly.

8 Engage 1st gear and move the vehicle from your steering point of the break.

9 Follow the left and right turn instructions given in above task to figure `8' shaped track (Fig 1)

Fig 1

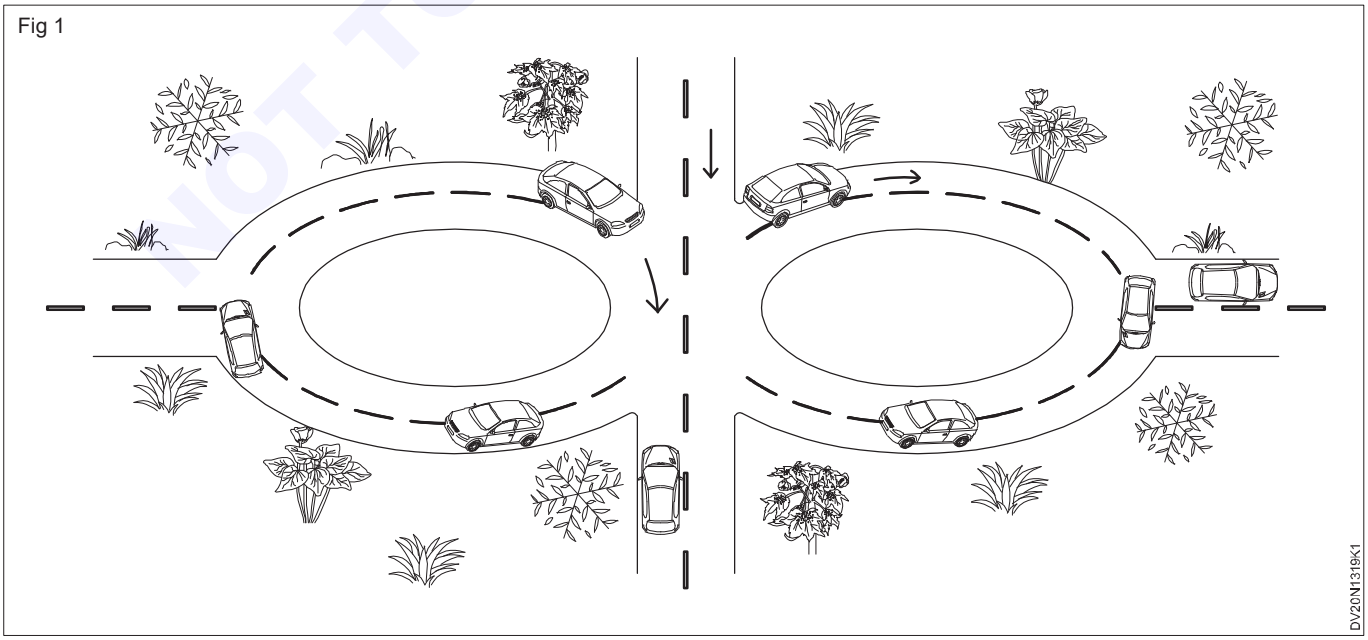

NOT TO BE REPUBLISHED

Note:

- **Always stop and check in both directions for pedestrians before crossing a side walk at a driveway.**
- **Don't pass a vehicle that is stopped at a crosswalk. There may be a pedestrian hidden from your view in the crosswalk.**
- **Follow the road rules & regulations and signals, while you drive the vehicle.**

10 See the rear view mirror for any vehicle coming behind of your vehicle.

11 Show the signal to left or right turn, either by the traffic indicator or by hand signaling

12 Move the vehicle to left lane for left turn.

13 Move the vehicle to right lane for right turn.

14 Slow down the vehicle and turn the vehicle as desired direction.

15 The vehicle should not be to close to the left or right side kerb stone.

16 Drive the vehicle with in your left half of the track to turn left.

17 Drive the vehicle with in your right half of the track to turn right.

18 Do not narrow at the corner.

19 Slowly turn the vehicle without apply brake.

20 After turning the vehicle release the traffic indicator.

21 Continue practice to drive in Fig `8' shaped road until your satisfaction.

22 To stop the vehicle see if there is any vehicle behind your vehicle.

23 Show the slowdown signal and slowdown the vehicle.

24 Press the brake pedal gradually.

25 Just a little before the vehicle steps declutch fully, if it is not done properly the engine will stop running.

26 Put the gear neutral and switch off the engine.

27 Apply hand brake, remove your seat belt and get down from the vehicle.

— — — — —

© NIMI NOT TO BE REPUBLISHED

Driver Cum Mechanic (LMV) - Simulator Driving and Vehicle Pre-driving Checks

Perform gear select and shifting practice on running vehicle

Objectives: At the end of this exercise you shall be able to
- **select the gear by gear shift lever**
- **up and down gear shifting on running vehicle.**

Requirements

Tools/Instruments

• Trainee's tool kit	- 1 No.
• Gear layout chart	- 1 No.
• Vehicle documents	- 1 Set.
• Vehicle emergency kit	- 1 Set.

Equipment/Machines

• Vehicle (LMV)	- 1 No.

Materials/Components

• Cotton waste	- as reqd
• Soap oil	- as reqd
• Engine oil	- as reqd
• Gear oil	- as reqd
• Brake fluid	- as reqd

PROCEDURE

Gear selection and shifting practice on running vehicle.

Note: Instructor should be given demo on vehicle for gear selection and shifting in static vehicle and running vehicle.

1 Select the vehicle for driving practice.

2 Observe the knowledge about gear shifting practice.

3 Clean the vehicle.

4 Check the vehicle before start as you learned in previous exercises.

5 Start the engine and let it allow for idle speed.

6 Sit on the driver seat and wear seat belt.

7 Identify the gear shift lever and gear positions.

8 Practice to move the gear lever in neutral position.

9 Press clutch pedal and engage 1st gear and move the vehicle by release the clutch pedal.

10 Practice to pedal shift the low gear to up gear and up gear to low gear, while vehicle running.

11 Practice to engage the reverse gear for reverse the vehicle.

12 Press the clutch pedal and engage the reverse gear by using gear shift lever.

13 Release clutch pedal pressure and gradually raise the accelerator pedal for vehicle smooth move.

14 After cover the few yard distance shift the reverse gear to neutral position to stop the vehicle run simultaneously apply brake for emergency stop the vehicle on the spot.

15 Press clutch pedal, shift the up gear to the low gear and low gear to up gear practice for develop your gear shifting skill. (Fig 1)

Note: Trainee's should be practice gear selection and shifting on static vehicle to achieve the knowledge about gear lever neutral position and then move to practice shift the gear low to up gear and up gear to down gear in running vehicle.

Fig 1

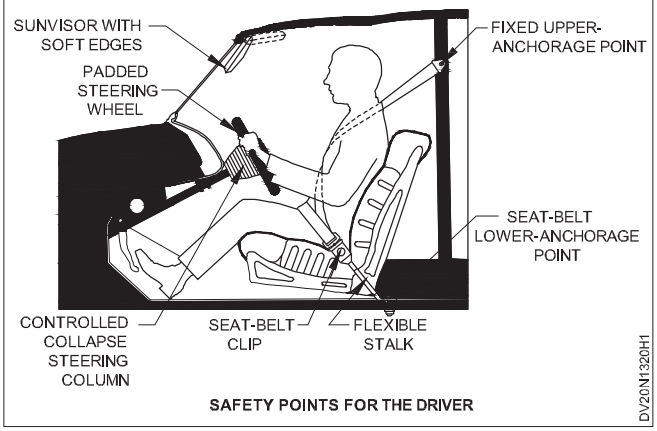

SAFETY POINTS FOR THE DRIVER

© NIMI NOT TO BE REPUBLISHED

Driver Cum Mechanic (LMV) - Simulator Driving and Vehicle Pre-driving Checks

Practice to apply brake in level ground, slope and stopping the vehicle

Objectives: At the end of this exercise you shall be able to
- **apply vehicle foot brake in level ground**
- **apply vehicle foot brake in slope road/ground**
- **apply braking and stopping the vehicle.**

Requirements

Tools/Instruments

- Trainee's tool kit - 1 No.
- Vehicle emergency tool kit - 1 No.
- Vehicle documents - 1 Set.
- `L' board - 1 No.

Equipment/Machines

- Vehicle (LMV) - 1 No.

Materials

- Cotton waste - as reqd
- Soap oil - as reqd

PROCEDURE

TASK 1: **Brake practice in level ground**

1 Select the vehicle for driving practice.

2 Clean the vehicle and check the vehicle as per check list given by your instructor.

3 Before sit on the vehicle driver seat, trainee's should have knowledge alertness, foresight, judgement and driving skill.

4 Sit on the driver seat and wear seat belt.

5 Start the vehicle and move it to plain ground.

6 Pick up speed smoothly and gradually.

7 When braking, press brake pedal smoothly and gradually increase, pressure.

8 Use firm and even pressure on the brake pedal.

9 Avoid sudden stopping the vehicle.

10 Avoid blaming on the brakes, press the brake evenly and smoothly backing off the slightly.

11 If your vehicle has antilock brake, apply firmly and continue to press hard, don't pump the brakes.

12 Practice your brake from failure.

13 While drive the vehicle Apply and release the foot brake, to control and reduce the vehicle speed.

— — — — —

TASK 2: **Braking to reduce the speed of the vehicle in slope ground**

1 Move the vehicle slowly in low gear on the plain ground.

2 Gradually increase the vehicle speed by pressing accelerator pedal.

3 Drive the vehicle in slope level ground at low gear speed

4 Apply foot brake by partial press the brake pedal to reduce the vehicle speed.

Note:

- **don't drive fast in slope ground/road.**

- **Don't apply sudden brake while drive the vehicle in slope ground.**
- **Reduce the gear ratio and apply brake to reduce the vehicle speed by partial press foot brake pedal.**

5 Apply foot brake by pressing even pressure on the brake pedal to stop the vehicle at slope ground and then apply hand brake put wheel chocks to protect vehicle from slippage.

— — — — —

TASK 3: **Braking and stopping the vehicle**

1 Start the vehicle and release the hand brake.

2 Engage the 1st gear by pressing clutch pedal.

3 Slowly release the clutch pedal simultaneously gradually increase the speed of accelerator pedal.

4 Increase the vehicle speed by changing low gear to up gear.

5 Apply foot brake to reduce the vehicle speed.

6 Reduce the gear ratio by changing gear up gear to low gear.

© NIMI NOT TO BE REPUBLISHED

7 Press the foot brake pedal by your right leg at even pressure on the foot brake pedal, until vehicle stop at the same movement.

8 Press the clutch pedal and (release gear) shift the gear change lever to neutral position.

9 Ensure the vehicle is stopped and then release the brake by removing your leg from foot brake pedal.

10 Engage the hand brake for vehicle safety.

11 Switch off the engine.

12 Release your seat belt and come out from the vehicle.

13 Apply wheel chocks front and rear of the vehicle wheel.

Note:

- **Check brake action often, if you have just gone through a up and down slope ground or muddy standing water.**
- **Maintain your vehicle brake by having them service regularly and checking the brake fluid frequently.**
- **Check the brake noise, pull to one side or need to be pumped to work or if your brake fluid level drops suddenly.**
- **Only use the mechanically fit vehicle for driving practice.**

— — — — —

© NIMI NOT TO BE REPUBLISHED

Driver Cum Mechanic (LMV) - Simulator Driving and Vehicle Pre-driving Checks

Practice to drive the vehicle on the road

Objectives: At the end of this exercise you shall be able to
- **drive a vehicle on a straight road**
- **shift the gears smoothly by using double declutching and single declutching**
- **apply the brake effectively for stop the vehicle.**

Requirements

Tools/Instruments

- Trainee's tool kit - 1 No.
- Vehicle R.C smart card - 1 No.
- Vehicle insurance certificate - 1 No.
- Driving license - 1 No.
- Vehicle emergency kit - 1 Set.

Equipment/Machines

- Vehicle (LMV) - 1 No.

Materials/Components

- Cotton waste - as reqd
- Soap oil - as reqd
- Lube oil - as reqd
- Coolant oil - as reqd

PROCEDURE

TASK 1: **Driver a vehicle on a straight road**

1 Check the vehicle before start the engine.

2 Start the engine and release the parking brake.

3 Press the clutch pedal fully.

4 Move the gear shifting lever into the 1st gear and retain your hand on the steering wheel. (First gear is no synchromesh)

5 Raise the engine speed a little and hold it there. This extra power is needed to move a stationary vehicle.

6 See the rear-view mirror for traffic coming from behind.

7 Release the clutch pedal slowly till you feel the car is moving forward.

8 Hold the clutch pedal.

9 Look around over your right shoulder.

10 Press the accelerator pedal gradually, and simultaneously release the clutch pedal slowly. Allow the vehicle to move slowly.

11 Keep your both hands on the steering wheel, look ahead and lift the left foot off the clutch pedal.

12 Let the car move steadily forward for a few yard.

13 Shift the gear using either double declutching or single de-clutching smoothly.

14 Hold the gear lever knob.

15 Increase the car speed and then release the accelerator pedal.

16 Declutch fully just as the accelerator pedal comes up to the top.

17 Shift the 1st gear to neutral.

18 Engage the 2nd gear.

19 Increase the car speed by pressing the accelerator pedal.

20 Repeat the above procedure for changing the gear from 2nd to the 3rd gear.

21 do not drive a vehicle at a speed more or less than what is specified by the manufacturer for a particular gear. (Fig 1)

22 For changing the gear from 3rd to 2nd and 2nd to 1st, repeat the same procedure.

23 Prepare yourself for braking.

24 Look into the rear-view mirror, and show hand signal for stopping.

25 Release the accelerator pedal gradually to avoid jerky movement.

26 apply the brake gradually.

27 Just a little before the car stops, declutch, if it is not done properly, the engine will stop running.

28 Stop the vehicle and put the gear shift lever to neutral position. Switch off the ignition.

29 Apply the hand brake.

© NIMI NOT TO BE REPUBLISHED

Fig 1

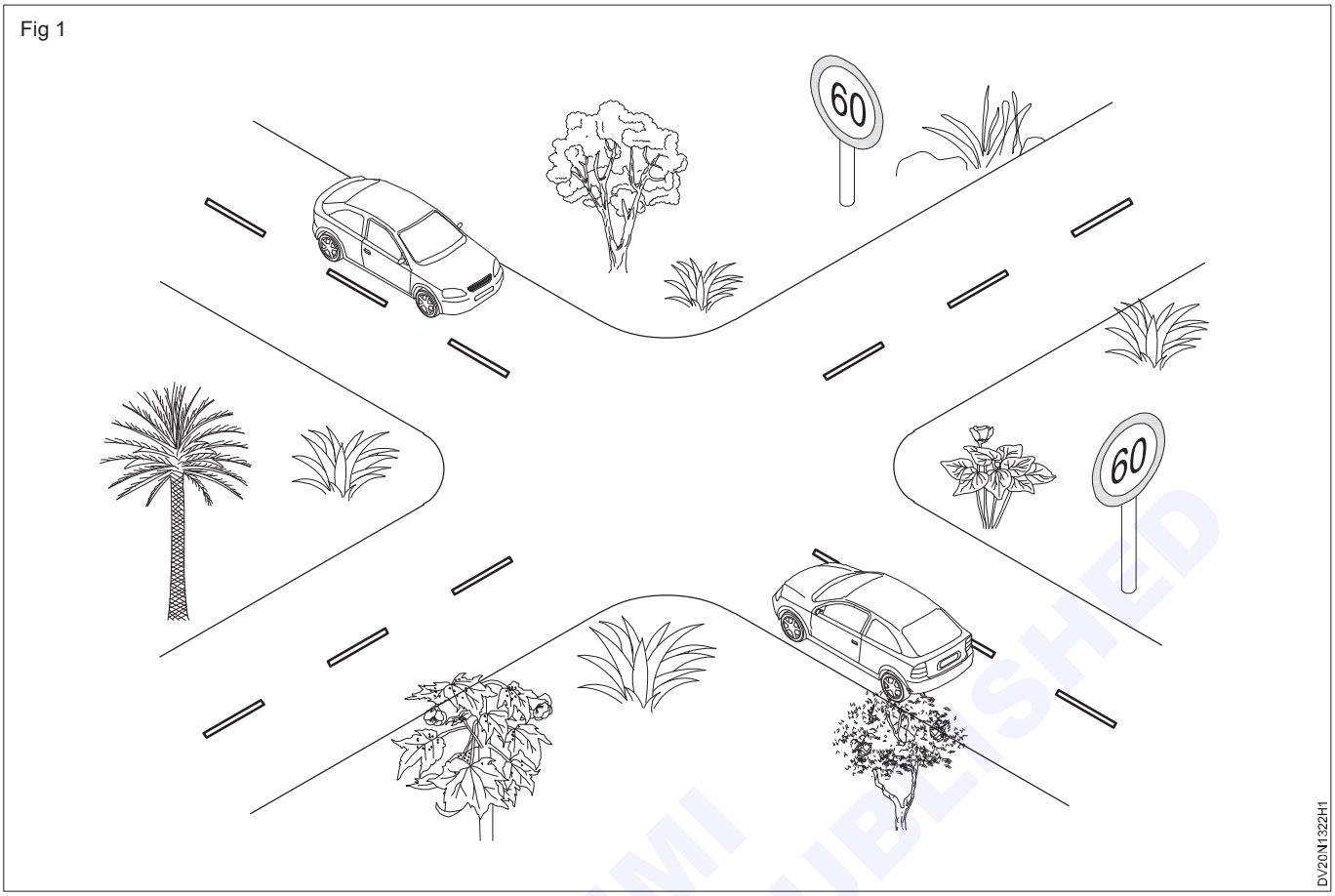

© NIMI NOT TO BE REPUBLISHED

Driver Cum Mechanic (LMV) - Simulator Driving and Vehicle Pre-driving Checks

Practice to overtaking a vehicle on the road

Objectives: At the end of this exercise you shall be able to
- **overtaking the vehicle on wide road.**

Requirements

Tools/Instruments

• Trainee's tool kit	- 1 No.
• R.C smart card	- 1 No.
• Insurance certificate	- 1 No.
• Driving license	- 1 No.
• Vehicle emergency kit	- 1 Set.

Materials/Components

• Cotton waste	- as reqd
• Soap oil	- as reqd
• Lube oil	- as reqd
• Coolant oil	- as reqd

Equipment/Machines

• Vehicle (LMV)	- 1 No.

PROCEDURE

Over taking a vehicle on wide straight road (Fig 1)

Fig 1

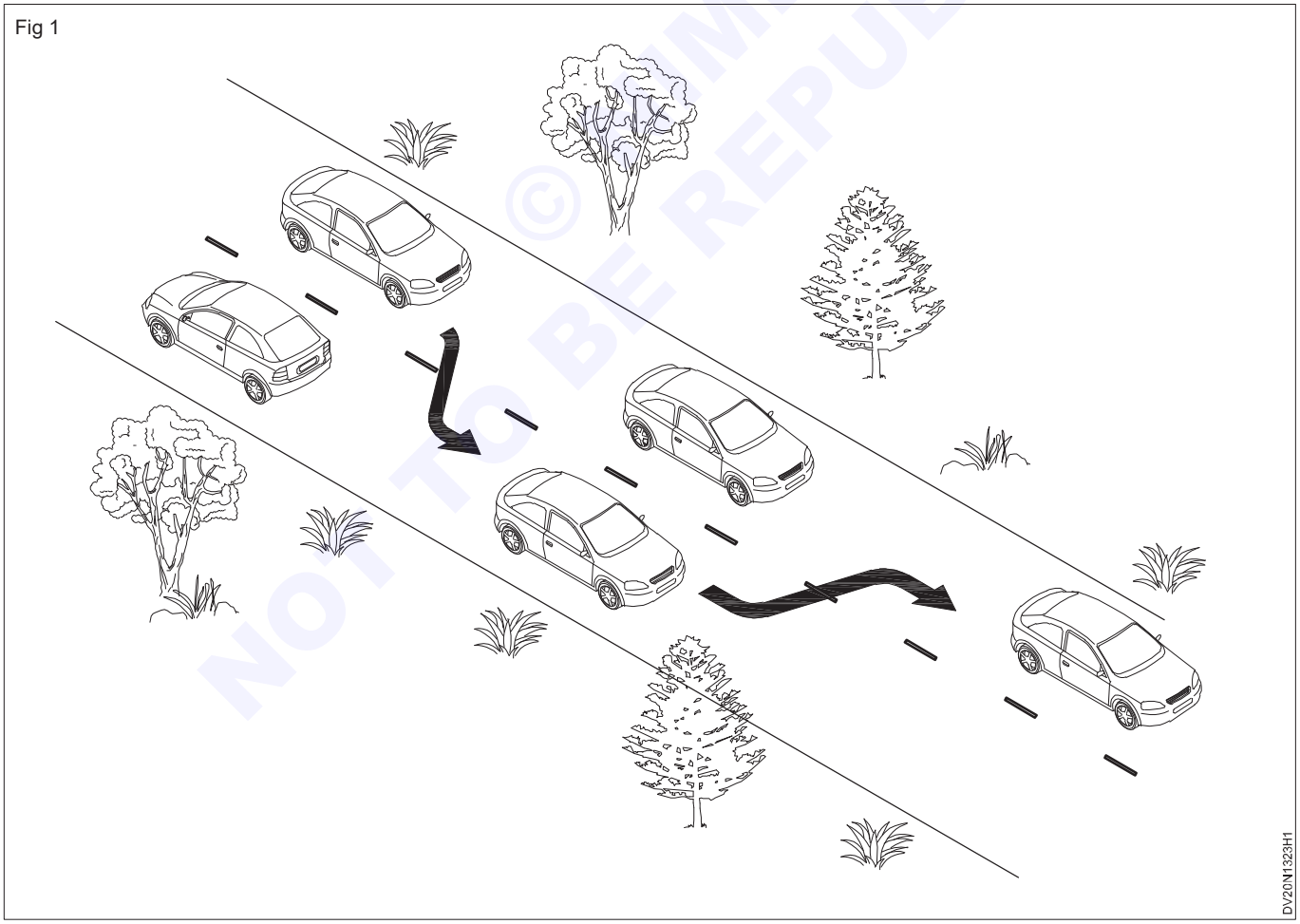

1 Select the vehicle for driving practice.

2 Clean the vehicle by soft cloth.

3 Check the vehicle as per check list (routine check before start the vehicle)

© NIMI NOT TO BE REPUBLISHED

4 Sit on the driver seat and adjust the seat for comfortable driving.

5 Start the engine with help of ignition switch.

6 Wear seat belt and adjust the rear view and side view mirrors.

7 Check the dash board panel lights and gauges.

8 Check the wiper, horn and lights.

9 Engage the 1st gear by pressing clutch and release the clutch slowly simultaneously gradually raise the accelerator pedal for vehicle smooth move.

10 Move the vehicle to straight wide road.

11 Drive the vehicle on left lane of wide road.

12 Observe the front going vehicle speed limit.

13 Look at the rear view mirror and ensure that no vehicle come behind you is to close.

14 Give proper signal to the vehicle that you are overtaking.

15 Sound the horn while overtaking.

16 Use the dim and dip light while overtaking a vehicle at night.

17 Never try to overtake near on road intersection, curves or any obstruction, which makes the road not clearly visible.

18 Ensure that there is enough road length before you overtake the vehicle.

19 Ensure there is no oncoming vehicle while overtaking vehicle.

20 Maintain a safe distance from the vehicle moving in front

21 Use the right signal light indicator while overtaking the vehicle.

22 Change gear up and accelerator to increase speed.

23 Give maximum accelerator and overtake, the vehicle by moving your vehicle right side passing on the road. (When a clear signal given by the which in front for overtake)

24 Always over take on the right side only in Indian roads.

25 Maintain proper distance from the vehicle you have overtaken and then move leftward slowly, when make your vehicle to left side lane of road, use the left signal light.

Note: Not to be overtaking a vehicle in the following zones.

- **No passing zone.**
- **School zones**
- **Curves with passing restriction**
- **Ring road with a solid line to the middle.**
- **Rail road crossing**
- **Intersection road**
- **Tunnels**
- **Bridges**
- **With a 300 feet of these areas.**

© NIMI NOT TO BE REPUBLISHED

Driver Cum Mechanic (LMV) - Simulator Driving and Vehicle Pre-driving Checks

Practice to overtaking a stationary and moving vehicles from left and right side

Objectives: At the end of this exercise you shall be able to
- **overtake a moving vehicle from left and right side**
- **overtake a stationary vehicle from left and right side.**

Requirements

Tools/Instruments

- Trainee's tool kit - 1 No.
- R.C book - 1 No.
- Insurance certificate - 1 No.
- Vehicle emergency kit - 1 Set.

Equipment/Machines

- Vehicle (LMV) - 1 No.

Materials/Components

- Cotton waste - as reqd
- Soap oil - as reqd
- Lube oil - as reqd
- Coolant oil - as reqd

PROCEDURE

TASK 1: **Overtaking a moving vehicle from left and right side (Figs 1&2)**

Note: Safe driving requires a knowledge of what is going on around you at all times. It's more than just a matter of starting at the road ahead. Defensive driver keep their eyes moving constantly, covering the front, rear and sides and the edge of the road.

1 Select the vehicle for driving practice.

2 Clean the vehicle.

3 Check the vehicle as per check list.

4 Refer the road signal chart for achieve the knowledge of traffic sign boards on the road.

5 Start the vehicle engine.

6 Sit on the driver seat and wear seat belt.

7 Adjust the driver seat for comfortable drive.

8 Adjust the rear view and side mirrors for comfortable views of driver while drive the vehicle on the road.

9 Engage the 1st gear by pressing clutch pedal

10 Gradually release the clutch pedal and simultaneously, press the accelerator pedal for smooth move the vehicle.

11 Scan the road ahead and observe just the car in front of the vehicle.

12 Note the vehicle how much away from your vehicle.

13 Get ready to increase your vehicle speed for overtake a vehicle at right side. (Fig 1)

14 Switch on right side indicator and drive the vehicle to right lane of road.

15 Sound the horn while overtake the front of your vehicle.

16 Ensure there is no upcoming vehicle while you overtaking at right side.

17 After overtaking the move your vehicle to left side lane of road. (switch off the right indicator and switch on the left indicator)

18 Keep sufficient distance from front and behind coming vehicle.

19 Ensure your vehicle safety overtake the moving vehicle on the road.

Left overtaking a vehicle (Fig 2)

1 Drive the vehicle on the highway

2 Scan the road conditions and vehicle population moving through your track.

3 Your vehicle is driving in expressway, at the same time moving vehicles are moving in same way. Then if you want overtake the vehicle, consider the left side move of your vehicle.

4 Observe the speed of front vehicle lane moving.

5 Increase your vehicle speed and use the left indicator left signal before overtake the vehicle from left side.

6 Ensure no vehicle is crossing from your vehicle left side.

7 Move the vehicle to left lane and overtake your front moving vehicle.

© NIMI NOT TO BE REPUBLISHED

8 After completely crossing the front vehicle keep the distance between the vehicle to move for same road lane.

9 After overtaking the vehicle, reduce the vehicle speed as you need.

Fig 1

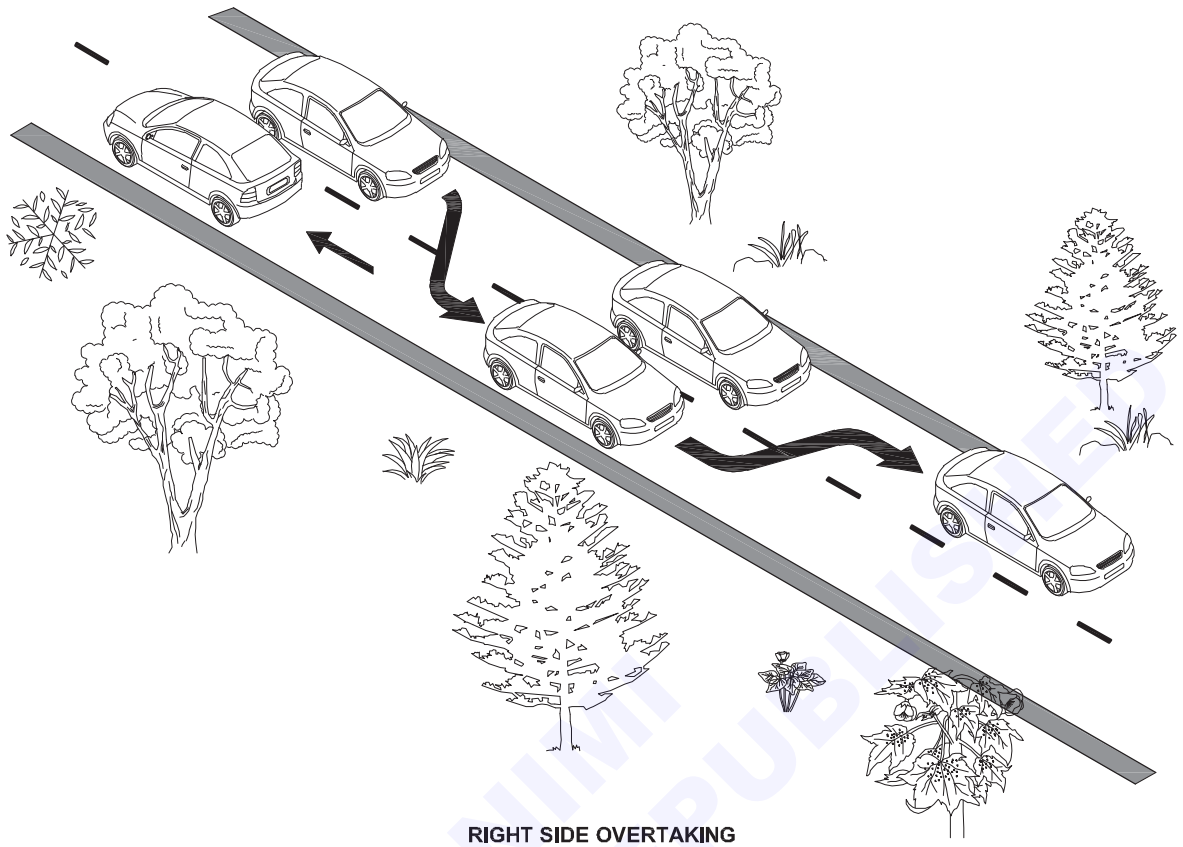

RIGHT SIDE OVERTAKING

DV20N1324H1

Fig 2

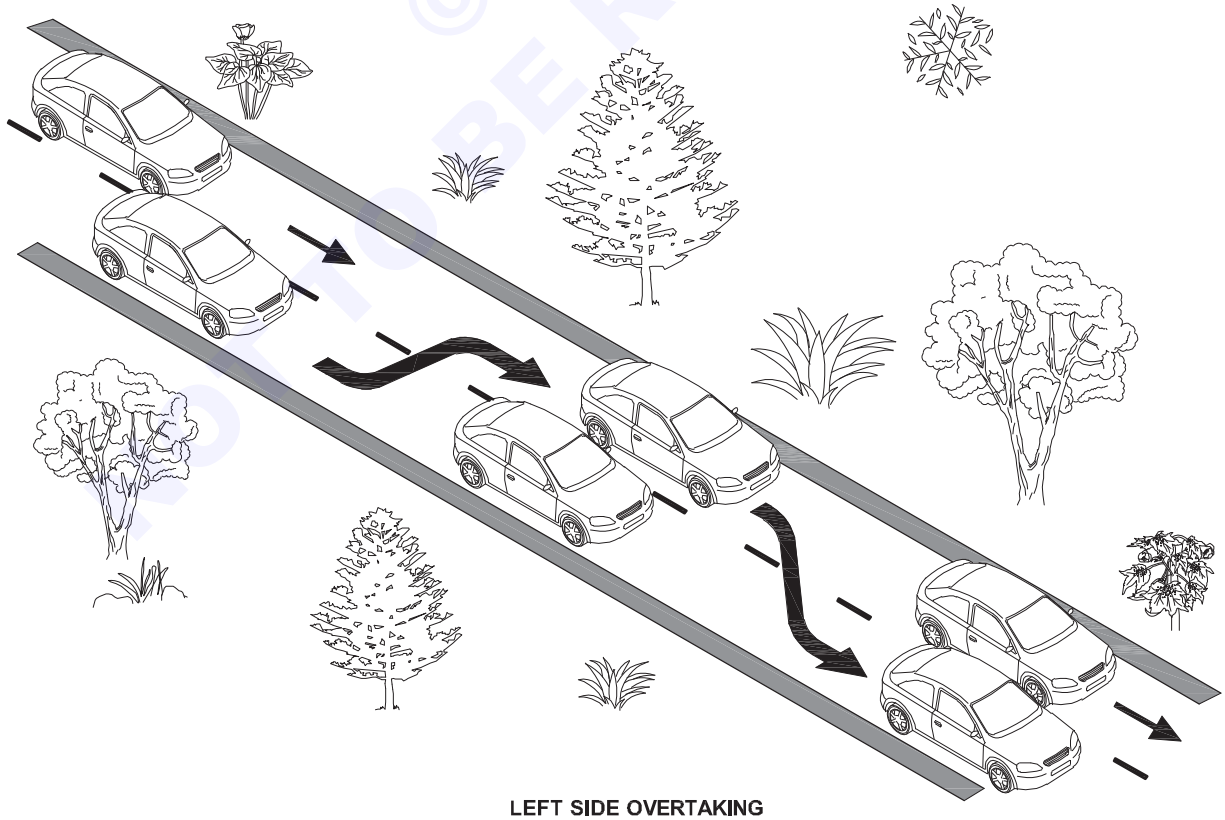

LEFT SIDE OVERTAKING

DV20N1324H1

© NIMI NOT TO BE REPUBLISHED

TASK 2: **Overtaking a stationary vehicle from left and right side**

1 Scan the road condition while you drive the vehicle.

2 If you find a stationary vehicle in front your moving vehicle make a judgement about the distance of stationary vehicle on the road.

3 Find a side to cross over the stationary vehicle (which side of stationary vehicle have enough space to pass over the vehicle.)

4 Suppose left side of stationary vehicle road have enough space, you can select for left side crossing the vehicle. (Fig 1)

5 Suppose right side of stationary vehicle's road have enough space, you can select for right side crossing your vehicle. (Fig 1)

6 Look front, side and behind your vehicle before move to left or right crossing the stationary vehicle.

7 Use the right or left indicator while crossing or overtaking the stationary vehicle.

8 No need to increase or decrease your vehicle speed, while overtaking a stationary vehicle.

Fig 1

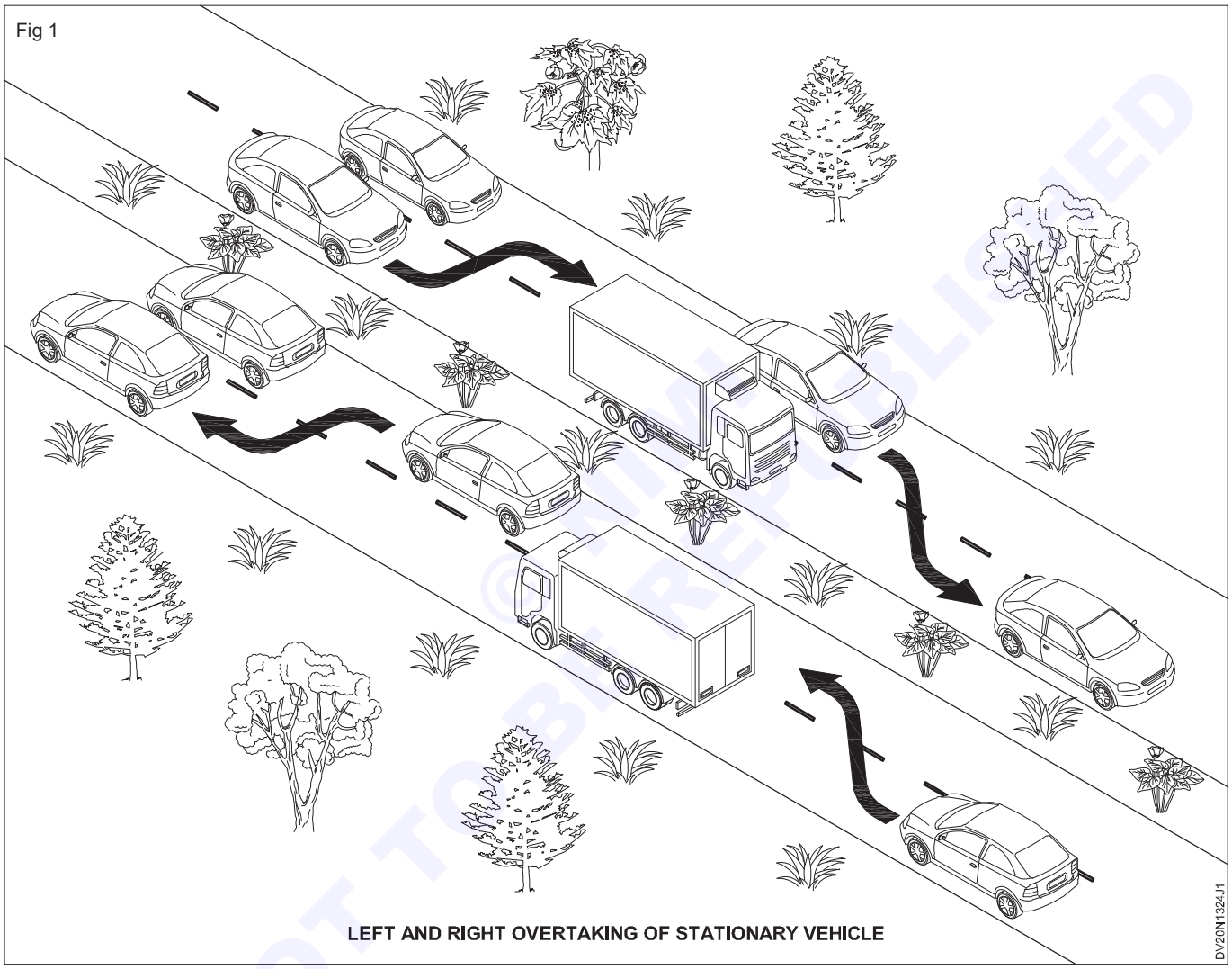

LEFT AND RIGHT OVERTAKING OF STATIONARY VEHICLE

NOT TO BE REPUBLISHED ©NIMI

Practice on vehicle 3 point turn 5 point turn and 'U' turn

Objectives: At the end of this exercise you shall be able to
- **drive the vehicle on 3 point turning road**
- **drive the vehicle on 5 point turning road**
- **drive the vehicle on 'U' turning road.**

Requirements

Tools/Instruments

- Trainee's tool kit - 1 No.
- Vehicle emergency kit - 1 Set.
- Vehicle owner's manual - 1 No.
- Vehicle records - 1 No.

Equipment/Machines

- Vehicle (LMV) - 1 No.

Materials/Components

- Cotton waste - as reqd
- Soap oil - as reqd

PROCEDURE

TASK 1: **Drive the vehicle on 3 point turning road**

1 Select the vehicle for driving practice.

2 Clean the vehicle.

3 Pre-driving check the vehicle and prepare it for driving practice.

4 Start the vehicle engine, let it allow to warm up.

5 Sit on the driver seat and adjust the driver seat.

6 Wear the seat belt and adjust the rear view mirror, side mirrors.

7 Press the clutch pedal and engage the 1st gear.

8 Release the hand brake and move the vehicle to driving road lane.

9 Move the vehicle by changing gears at normal speed.

10 Pull over to the left side of the road and wait until traffic is clear for your vehicle turn to left side.

11 Reduce the vehicle speed before turn your vehicle in `3' point turning.

12 Before you begin the turnover, you should first signal and pull over to the left side of the road.

13 Stay on the side of the road until traffic is clear.

14 Put your vehicle side indicator light to left side turn indication.

15 Turn the steering wheel to the left, and then turn left across the road.

16 Turning the steering wheel all the way will enable you get out the maximum change in direction from the turn.

17 After turning the vehicle, the next step is turn the steering to the right.

18 Ensure the vehicle is driving on straight road.

19 Straighten up the steering and move into the correct lane.

Note: As point turn takes more time than traditional turns and you need plenty of space in both directions to perform the turn safely three point turn that is used if you need to turn the driving vehicle around in a tight space.

The point turn enable you to turn on a narrow road by turning the steering wheel and moving your vehicle three times. (Reverse and forwarded moving)

Simple steps for three point turn your vehicle.

1 Pull over the vehicle to the left side of the road.

2 Use the left turn signal.

3 Turn the steering wheel to the left then reverse the vehicle.

4 Turn the steering wheel right then straighten up and move into the correct lane.

© NIMI NOT TO BE REPUBLISHED

Fig 1

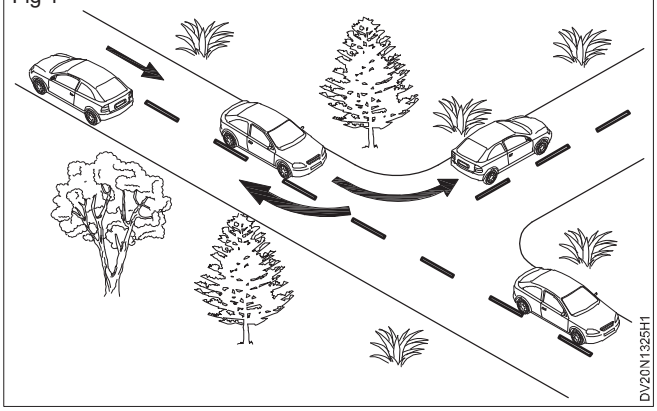

TASK 2: **Vehicle 5 point turn driving practice**

Note: Five point turn is basically modified 3-point turn.

1 It uses the same general technique as a 3 point turn but involves reversing the vehicle an additional time to compensate for the narrow space in which must be performed.

2 Look at the roadway ahead as far as possible and check your rear view and side mirrors to ensure the roadway is fully clear on both of ahead and behind of your vehicle.

3 Drive your vehicle near to the side of the road as possible.

4 Be sure to leave at least a couple of inches clearance at the edge to give your vehicle tire to turn.

5 Operate your steering wheel a sharp turn to turning towards to opposite side of the road. Keep this turn as tight as possible.

6 Stop before going off the opposite side of the road, ideally leave several inches at the front of your vehicle to be safe.

7 Put the driving vehicle into reverse and turn the steering wheel sharply to the right as you press the accelerator pedal.

8 Bring up the vehicle until the vehicle tire is few inches from the edge of the road.

9 Return the steering wheel to drive. Turn the wheel sharply pull forward again, leaving enough space at the front of your vehicle.

10 Return the vehicle to reverse turn the wheel sharply to you need. Back up until your driver side tire is few inches away from the edge of the road.

11 Ensure your vehicle have enough space to turn fully into the lane you want to travel in.

12 If not enough space, repeat forwarding and reversing as many times as necessary to ensure adequate clearance to turn into the lane.

13 Put your vehicle into drive lane and drive forward in appropriate lane.

14 If you want turn your vehicle to right direction in a narrow way, move your vehicle to right side road lane.

15 Engage the right side indicator and reduce the vehicle speed before 500 feet.

16 If unable to turn the vehicle, stop and reverse the vehicle by turn the steering wheel, left direction and watch rear view and side mirrors.

17 Stop the vehicle and straighten the wheel to drive straight on the road.

18 Engage the 1st gear and turn the steering to right and move the vehicle by pressing accelerator pedal as you need.

19 Turn the vehicle to right side direction by turn the steering wheel as you need.

20 Ensure the vehicle is turn to right direction and straighten the steering to move the vehicle straight (Fig 1 & Fig 2)

Fig 2

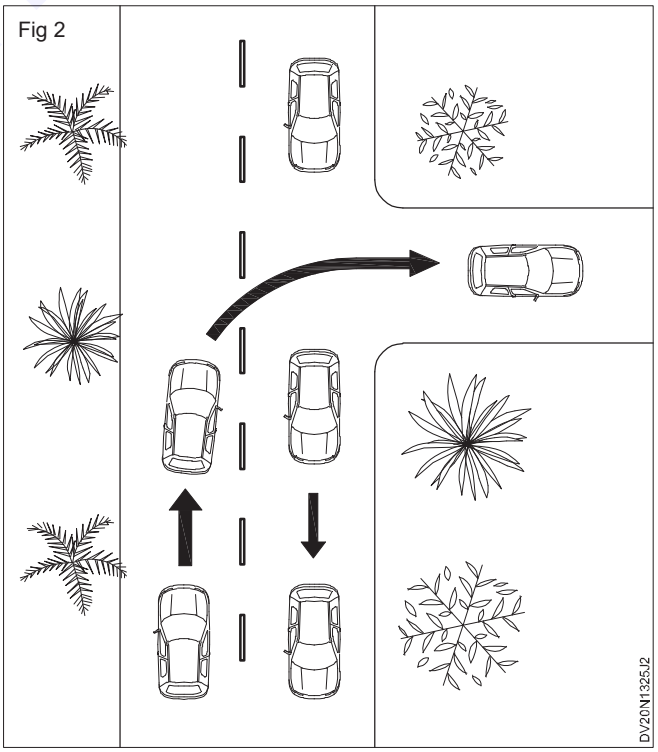

© NIMI not to be republished

Fig 1

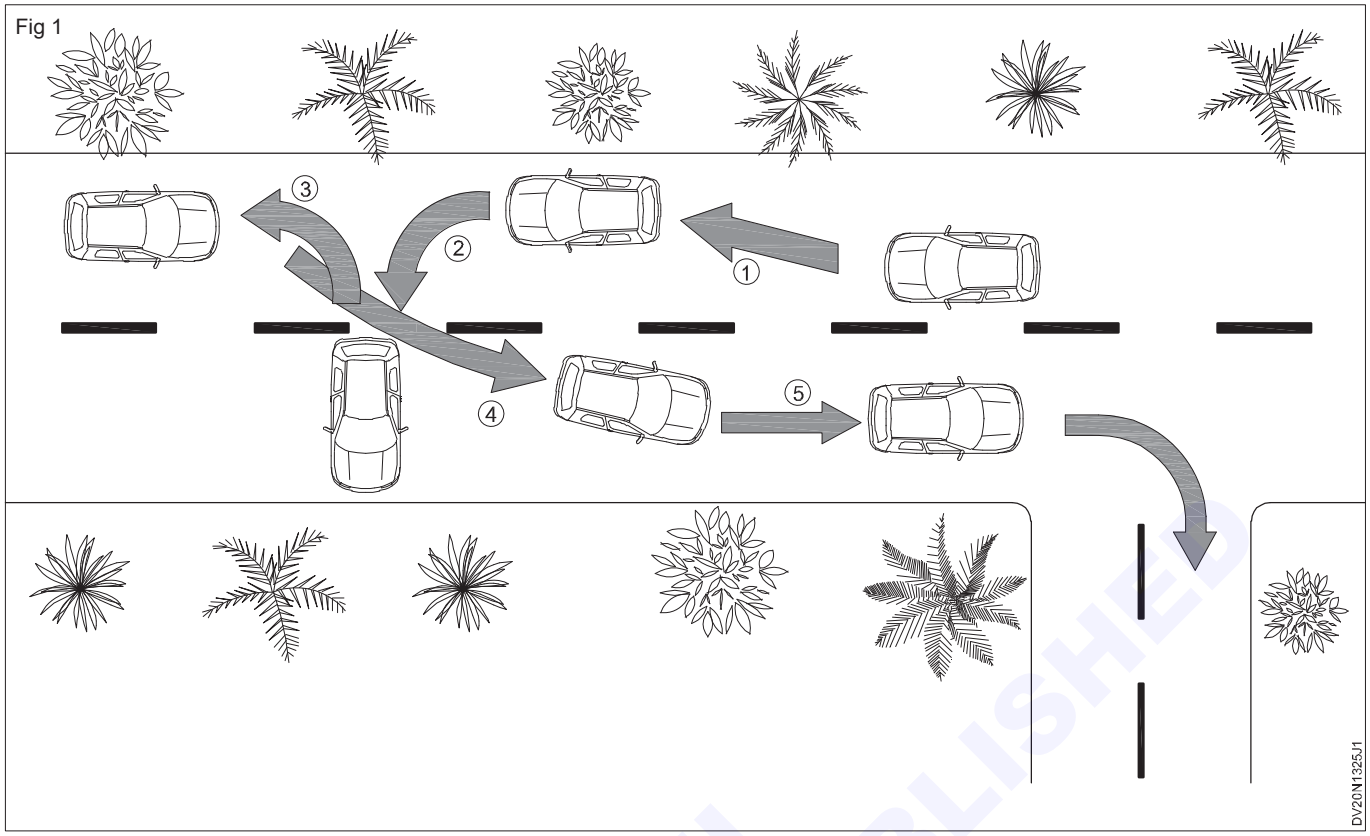

TASK 3: **Vehicle `U' shape turning drive (Fig 1)**

Fig 1

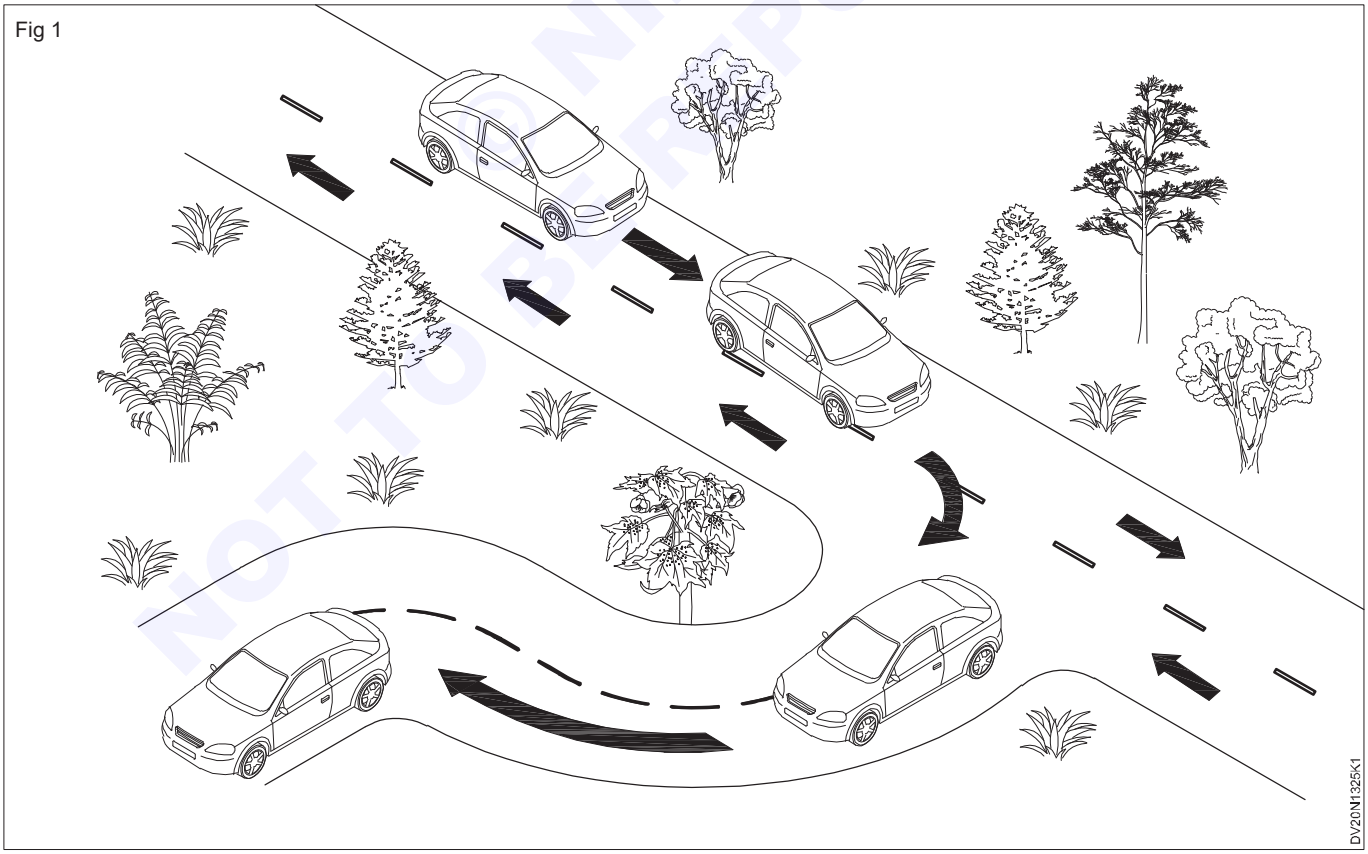

1 Scan the road for `U' shaped road bend.

2 Reduce the vehicle speed before 500 feet and use the turn signal indicator light.

3 Turn the steering wheel to right side for right turn the vehicle.

4 Turn the steering wheel to left side for left turn the vehicle.

© NIMI NOT TO BE REPUBLISHED

5 Use the sound horn while turn your vehicle.

6 Don’t over take the vehicle in `U’ shaped bend road.

7 Watch rear view mirror, side mirror while turn your vehicle.

8 Watch the vehicle come from ahead and behind your vehicle.

9 Use the vehicle speed as per road signal indicate on bend.

10 On hair pin bend, use the head light dip and dim light focus while drive vehicle at night.

— — — — —

© NIMI
NOT TO BE REPUBLISHED

Driver Cum Mechanic (LMV) - Simulator Driving and Vehicle Pre-driving Checks

Practice on following driving vehicle distance

Objectives: At the end of this exercise you shall be able to
- **Maintain the distance between drive vehicles on the road.**

Requirements

Tools/Instruments

- Trainee's tool kit - 1 No.
- Vehicle emergency kit - 1 Set.
- Vehicle documents - 1 Set.
- Vehicle owner's manual - 1 No.

Equipment/Machines

- Vehicle (LMV) - 1 No.

Materials/Components

- Cotton waste - as reqd
- Soap oil - as reqd
- Coolant oil - as reqd
- Lube oil - as reqd
- First aid kit - as reqd

PROCEDURE

Maintain distance between vehicles on the road lane

1 Select the vehicle for driving practice.

2 Check and prepare the vehicle for driving.

3 Sit on the vehicle driver seat and adjust the seat position

4 Wear your seat belt and adjust the rear view and side mirrors for your clear rear view vision of behind come vehicles.

5 Start the engine and allow it for warm up few minutes.

6 Engage the first gear by pressing clutch pedal.

7 Gradually release the clutch pedal simultaneously press the accelerator pedal for smooth move of vehicle.

8 Move the vehicle to highway drive lane.

9 Follow traffic signals and road rules and regulation while you drive the vehicle on road.

10 Use the head light and light signal, while overtaking a vehicle at day and night driving practice.

11 Use the stop hand signal, when bring your vehicle to full stop.

12 Never insists on the right of way if another driver does not allow you to overtake.

13 Maintain a safe distance (Fig 1) between vehicles with the three second rule. (at least 300 feet distance between vehicle).

14 Follow the defensive driving techniques for keep you safe on the road.

15 Keeping to the safe distance between vehicle is the minimum reaction time you need to stop your vehicle safely. (Fig 2)

16 If you are driving on a road with a passing lane slow down to encourage the driver to pass (overtake) your vehicle

Note:

- **Use the following rule for safe driving a vehicle.**
- **Use your hand and light signals whenever need.**
- **Follow the safe distance between vehicle.**
- **Don't fight tailgaters.**
- **Be polite with your vehicle lights**
- **Be respectful of drivers who are slow or hesitant.**

© NIMI NOT TO BE REPUBLISHED

Fig 1



DV20N1326H1

Fig 2

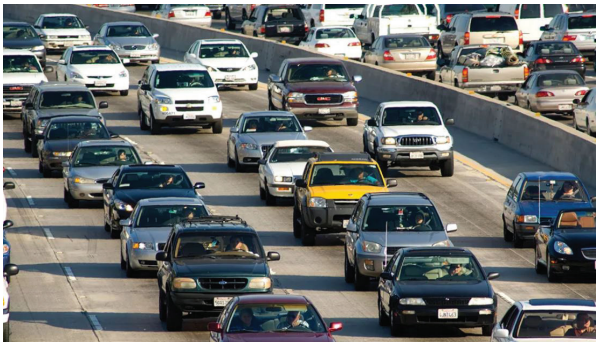

© NIMI
NOT TO BE REPUBLISHED

Driver Cum Mechanic (LMV) - Simulator Driving and Vehicle Pre-driving Checks

Practice on reverse the vehicle in different direction

Objectives: At the end of this exercise you shall be able to
- **reverse the vehicle in a straight position**
- **reverse the vehicle in a left direction**
- **reverse the vehicle in a right direction**
- **reverse the vehicle in a figure `8' shaped bend road.**

Requirements

Tools/Instruments

• Trainee's tool kit	- 1 No.
• Vehicle emergency kit	- 1 Set.
• Vehicle documents	- 1 Set.
• First aid kit	- 1 No.

Equipment/Machines

• Vehicle (LMV)	- 1 No.

Materials/Components

• Cotton waste	- as reqd
• Soap oil	- as reqd
• Coolant oil	- as reqd
• Lube oil	- as reqd

PROCEDURE

TASK 1: **Reverse the vehicle in straight position (Fig 1)**

Fig 1

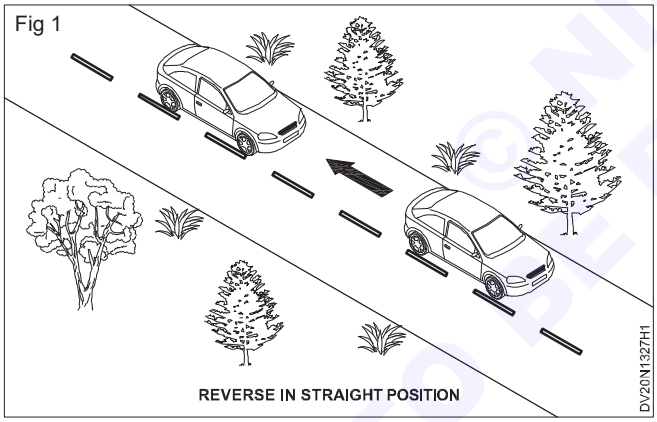

REVERSE IN STRAIGHT POSITION

1 Select the vehicle for reversing practice.

2 Clean the vehicle and prepare it for driving practice.

3 Sit on the driver seat and adjust the driver seat position.

4 Wear the seat belt and adjust the rear view and side mirrors for clean view of object behind the vehicle.

5 Start the vehicle and engine the following before reversing the vehicle.
- There is nothing hidden behind the vehicle.
- There are no pedestrians, cyclist or other vehicles behind your vehicle.
- Ensure the path is very clear from all directions.

6 Engage the reverse gear by pressing clutch pedal.

7 See the rear view mirror.

8 Sound the reverse warning signal.

9 Look back your right or left shoulder.

10 Reverse the vehicle in straight by releasing clutch pedal gradually simultaneously press the accelerator pedal for reverse move the vehicle.

11 If need take assistance from your helper for reversing the vehicle.

12 Reverse the vehicle slowly to the desired location.

13 Apply brake, while reach the desired location and neutral the reverse gear.

14 Apply hand brake.

15 Stop the engine, remove your seat belt and get down from the vehicle.

16 Ensure the vehicle is parked on the marked area.

TASK 2: **Reverse the vehicle in left direction (Fig 1)**

1 Mark the left parking area in plain ground.

2 Start vehicle and move to forward for few feet.

3 Stop the vehicle and inspect the area to be parked the vehicle.

4 Ensure there is no any object in left parking area.

5 Engage the Reverse gear by pressing clutch pedal and ensure the reverse signal by sound horn and light.

© NIMI NOT TO BE REPUBLISHED

6 Pre set the side mirror and rear view mirror or reverse camera

7 Slowly release the clutch and simultaneously gradually raise the accelerate pedal.

8 Turn the steering wheel in left direction as required.

9 Watch the reverse mirror and move the vehicle slowly towards reverse in left direction.

10 Carefully watch the reverse blind side of the vehicle if need take assistance to give signal for your reverse left side parking.

11 Reverse the vehicle by turn the steering wheel left and right to park the vehicle in left directional movement of the vehicle.

12 Ensure the vehicle is properly parked and both side of the vehicle space is equal.

13 Stop the vehicle and switch off the engine.

14 If the vehicle is to be parked for long period, disconnect the battery terminal to avoid discharge the battery.

15 Get down from driver sheet and close the all doors.

Fig 1

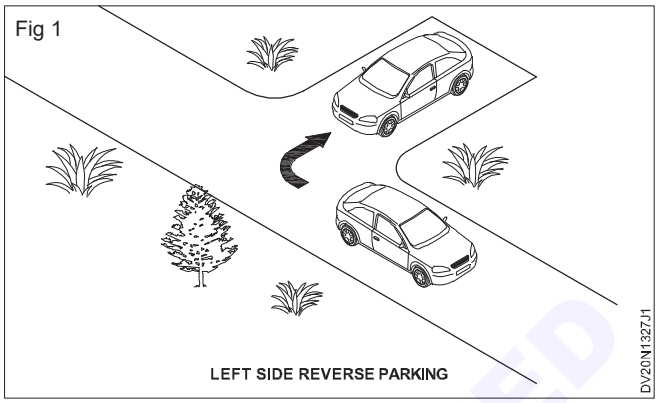

— — — — —

TASK 3: **Reverse the vehicle in a right direction (Fig 1)**

1 Start the vehicle and let it allow to warm up the engine.

2 Access the parking area (distance, turn angle, parking area wide etc.)

3 Engage the reverse gear and move the vehicle towards reverse.

4 Turn the vehicle steering to right for move the vehicle towards right direction.

5 Look at the right side reverse view for ensure your vehicle reverse movement.

6 If need forward and reverse the vehicle many times to achieve correct reverse directional position of the vehicle.

7 When you are reverse the vehicle in right side direction look your right side for achieve the correct space from the both side of the wall.

8 Ensure the vehicle is properly parked in marked/ selected area.

9 Stop the vehicle and neutral the gear.

10 Switch off the engine and engage the parking brake.

11 Ensure the safety precautions of the vehicle.

Fig 1

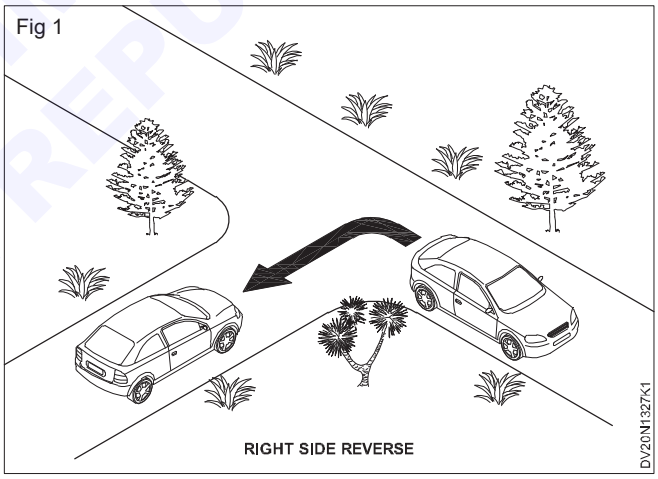

— — — — —

TASK 4: **Reverse the vehicle in Figure `8' shaped bend track**

1 Mark the figure `8' shaped track on the plain ground (Fig 1)

Fig 1

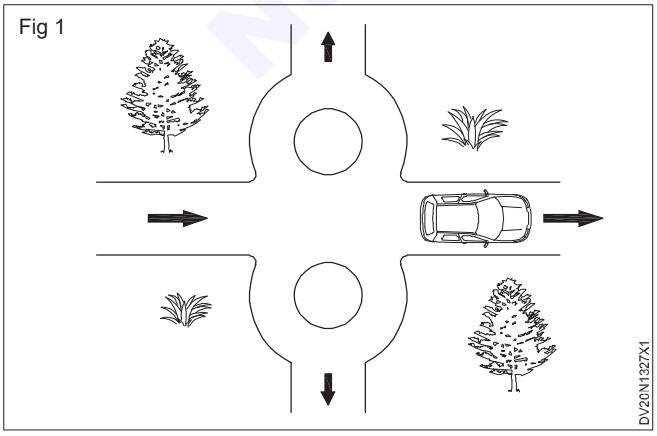

2 Start the vehicle and engage the reverse gear.

3 Set the rear view and side view mirrors for clear rear view vision.

4 Study the figure `8' shaped road width, and your vehicle width and length.

5 Move the vehicle towards reverse practice in `8' shaped road.

6 Turn the steering wheel left and right for move the vehicle in right direction.

7 Move the vehicle slowly by watching drive side rear view.

8 If you feel any difficulty in reversing vehicle you can choose to move the vehicle forward and reverse for

© NIMI NOT TO BE REPUBLISHED

achieve the correct position of the reverse direction of your vehicle.

9 Ensure your vehicle reverse drive is moving properly in figure `8' shaped road as shown in (Fig 2)

10 Move the vehicle in reverse direction as shown in (Fig 2).

Fig 2

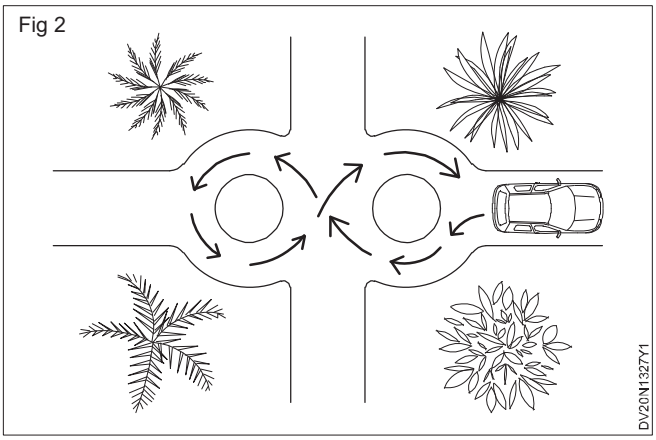

Note:

- **Move the vehicle slowly in reverse direction.**
- **Watch the driver side for managing correct space from the edge of the road.**
- **Use the reverse light and sound horn while reverse the vehicle.**
- **If you practice in first time you can take assistance of co-driver for reversing your vehicle.**
- **Ensure there is no any obstacles behind your vehicle.**
- **Be confident yourself for reverse the vehicle in `8' shaped bend track.**
- **Follow the road rules and regulations and signals for safe driving.**
- **Follow the instructor's instruction while you practice the reverse driving your vehicle.**
- **Before move the vehicle for driving fix the 'L' board front side and rear side of the vehicle.**

© NIMI NOT TO BE REPUBLISHED

Driver Cum Mechanic (LMV) - Simulator Driving and Vehicle Pre-driving Checks

Practice on vehicle parking in different directions

Objectives: At the end of this exercise you shall be able to
- **park the vehicle diagonally**
- **park the vehicle in parallel position**
- **park the vehicle in forward and reverse entry**
- **park the vehicle uphill facing and downhill facing.**

Requirements

Tools/Instruments

• Trainee's tool kit	- 1 No.
• Vehicle emergency kit	- 1 Set.
• Vehicle current documents	- 1 Set.
• Driving license	- 1 No.
• 'L' board	- 1 No.

Equipment/Machines

• Vehicle (LMV)	- 1 No.

Materials/Components

• Cotton waste	- as reqd
• Soap oil	- as reqd
• Coolant oil	- as reqd
• Lube oil	- as reqd

PROCEDURE

TASK 1: **Parking the vehicle in diagonally/angular position (Figs 1& 2)**

Fig 1

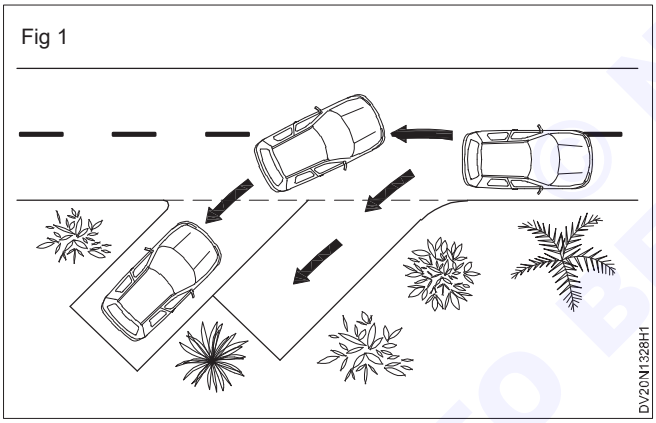

Fig 2

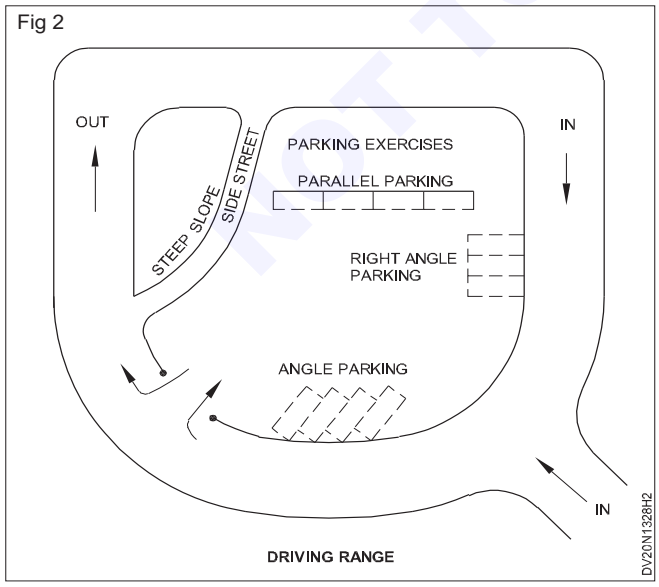

1 Select the vehicle for driving practice.

2 Before start the vehicle and pre-driving check the vehicle.

3 Check the angular parking area to be park your vehicle.

4 Start the vehicle and engage the reverse gear.

5 Set the rear view and side mirrors of your vehicle.

6 Release the parking brake.

7 Slowly release clutch pedal and simultaneously press the accelerator pedal for smooth move the vehicle in reverse direction.

8 Turn the steering wheel, according to need of wheel turning.

9 Ensure that there is no other vehicle or obstructions or object in the way of your diagonal parking area.

10 Move the vehicle to marked parking area for proper designed parking.

11 While moving the vehicle in reverse, watch the both side and rear view mirror or driver side by turn your head to right shoulder side.

12 Before move the vehicle in reverse, switch on the reverse light and sound warning, till your vehicle complete the parking in diagonal/angular parking area.

13 When the vehicle is reached to end part of parking step the vehicle and switch off engine.

14 Apply the parking brake, if need apply the wheel chocks.

NOT TO BE REPUBLISHED

TASK 2: **Parking the vehicle in parallel position (Fig 1)**

1 Start the vehicle and remove the wooden chocks applied to the wheel.

2 Engage the 1st gear and release the parking/hand brake.

3 Move the vehicle from the diagonal parking area to plain road.

4 Stop the vehicle and check the parallel parking area.

5 Engage the reverse gear and slowly move the vehicle towards parking place.

6 Align the vehicle by turn the steering wheel, while move the vehicle towards parallel parking place.

7 When vehicle moving in reverse, use the sound horn and reverse left.

8 Carefully watch the driver side and blind side of the vehicle by using side view and rear view mirror.

9 Slowly move the vehicle in reverse, until vehicle is yet to parking end spot.

10 When the vehicle is parked properly, stop the vehicle and neutral the gear.

11 Switch off the engine and engage the parking brake.

Note:

- **Perfect parallel parking needs lots and lots of practice.**
- **You need to be in full control of the vehicle and all limits, fix senses need to work at all times for that deep satisfaction of getting out and seeing perfectly parked your vehicle.**
- **Make sure the wheels are straightened and not turned out after you have finished parking.**

Fig 1

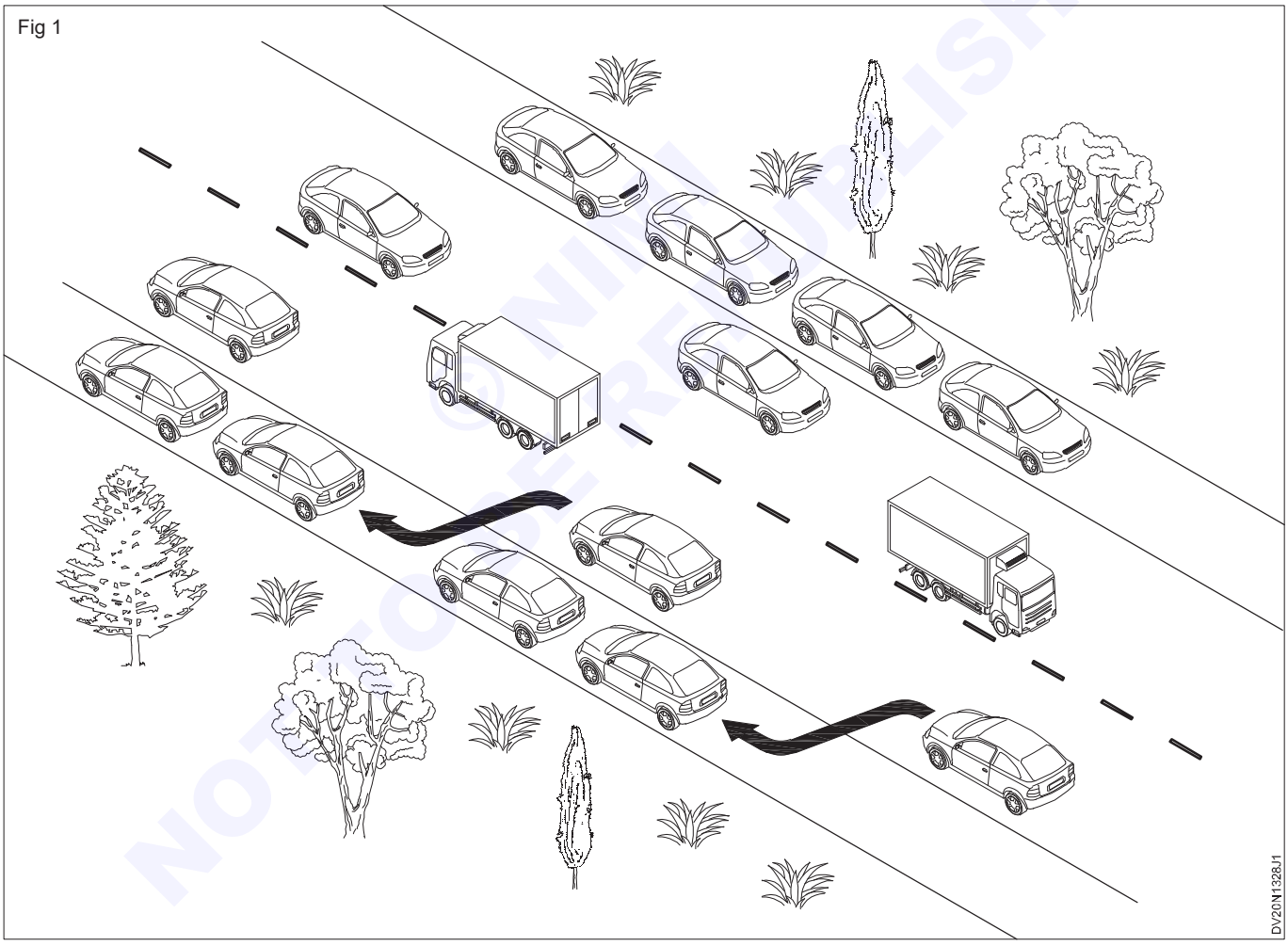

TASK 3: **Perpendicular parking a vehicle (Fig 1)**

1 Access the perpendicular parking area's length and width.

2 Compare the parking area with your vehicle length and width.

3 Start the vehicle engine and let it allow to warm up.

4 Engage the reverse gear and release the hand brake.

5 Activate the indicator and use the hand signals to communicate your information to turn it the parking space.

6 Move the vehicle towards parking space by turn the steering wheel sharply towards the parking place.

7 Adjust the steering wheel to enter your vehicle as you pull into the space.

© NIMI NOT TO BE REPUBLISHED

8 If you need, you can move the vehicle front and reverse many times to achieve correct parking with in space provided.

9 While reversing the vehicle left and right side should be visible in your side mirror.

10 Stop and shift your vehicle into reverse.

11 Check around the vehicle for sufficient space.

12 Keep wheel straight and back up slowly.

13 When the rear of your vehicle is nearly in the center of the space, steer sharply to the right to straighten up.

14 Continue reversing until your vehicle is completely in the parking space. Be careful not to pull up to close to rear obstacles such as walls or other vehicles.

Note: Suppose if you want to park your vehicle front forward perpendicular parking, use the forward and reverse gear to proper parking the vehicle in correct space. See the following figures for forward parking and reverse parking your vehicle.

Fig 1

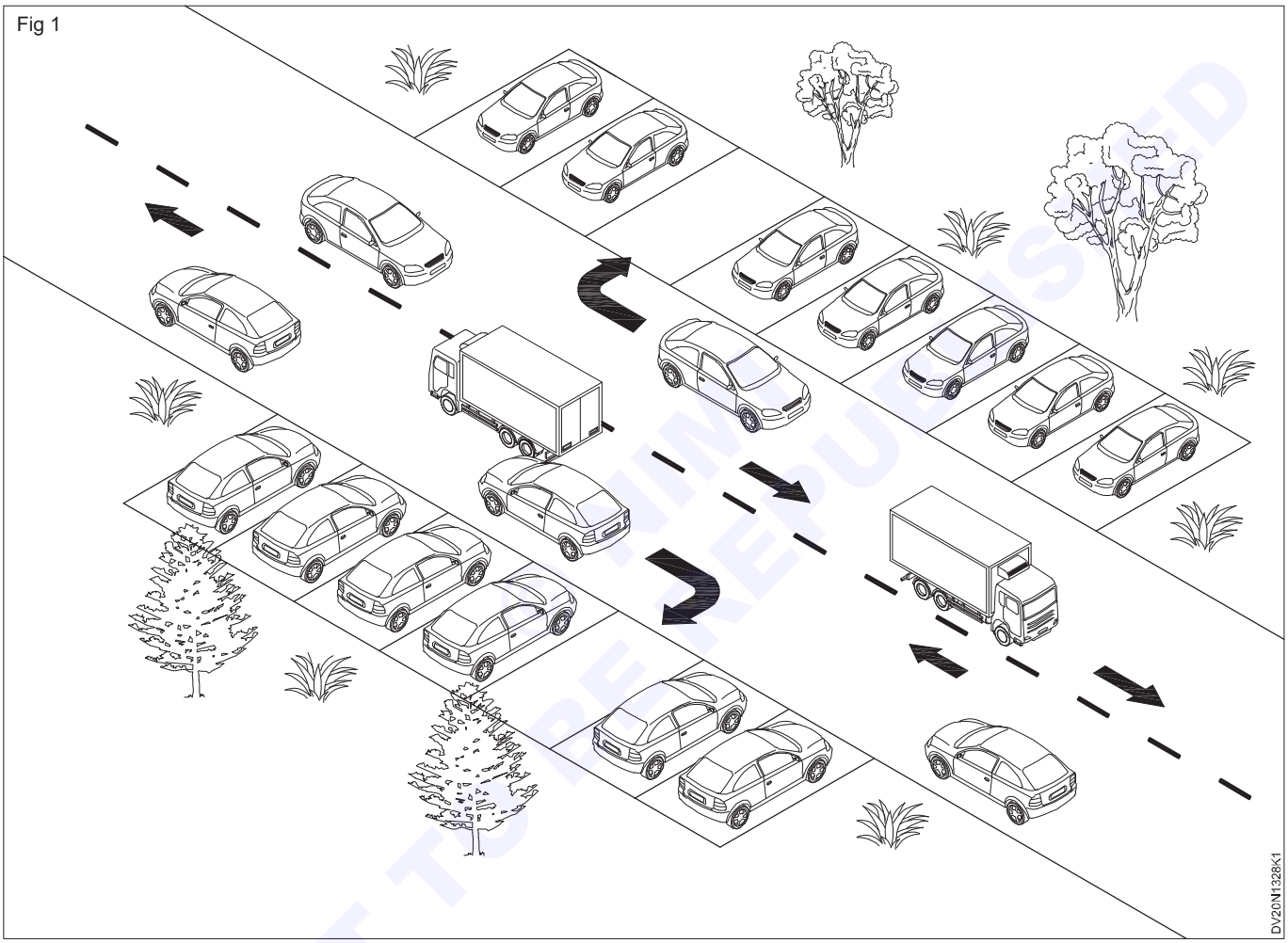

TASK 4: **Entry facing the vehicle towards uphill parking and downhill parking (Fig 1 & 2)**

Note:

- **Parking on a hill is more dangerous than parking on a pain area.**
- **Instructor has to be given live demo on vehicle to entry facing towards uphill parking space and downhill facing parking.**

1 Start your vehicle.

2 Accurately judge the size of the parking space.

3 Accurately judge the position and distance of your vehicle compared to the curb and vehicle behind and in front of you.

4 Move the vehicle toward uphill parking spot.

5 Drive your car at an appropriate speed to uphill facing parking.

6 Steer your vehicle correctly at the right angle and distance from the crub and other vehicles.

7 Center your vehicle to parking space center by turning steering wheel left and right movement.

8 Watch the driver side for proper spacing between vehicle or boundary wall.

9 Leave enough space for all the side of the vehicle, while parking towards uphill facing.

NOT TO BE REPUBLISHED

10 Stop the vehicle and release the gear in to neutral position.
11 Apply hand brake.
12 Apply wooden chocks to front and rear wheels backside for vehicle safety.

Note: If you need take assistance from other to give signal while you are parking the vehicle towards facing uphill.

Parking the vehicle towards facing downhill

Fig 1

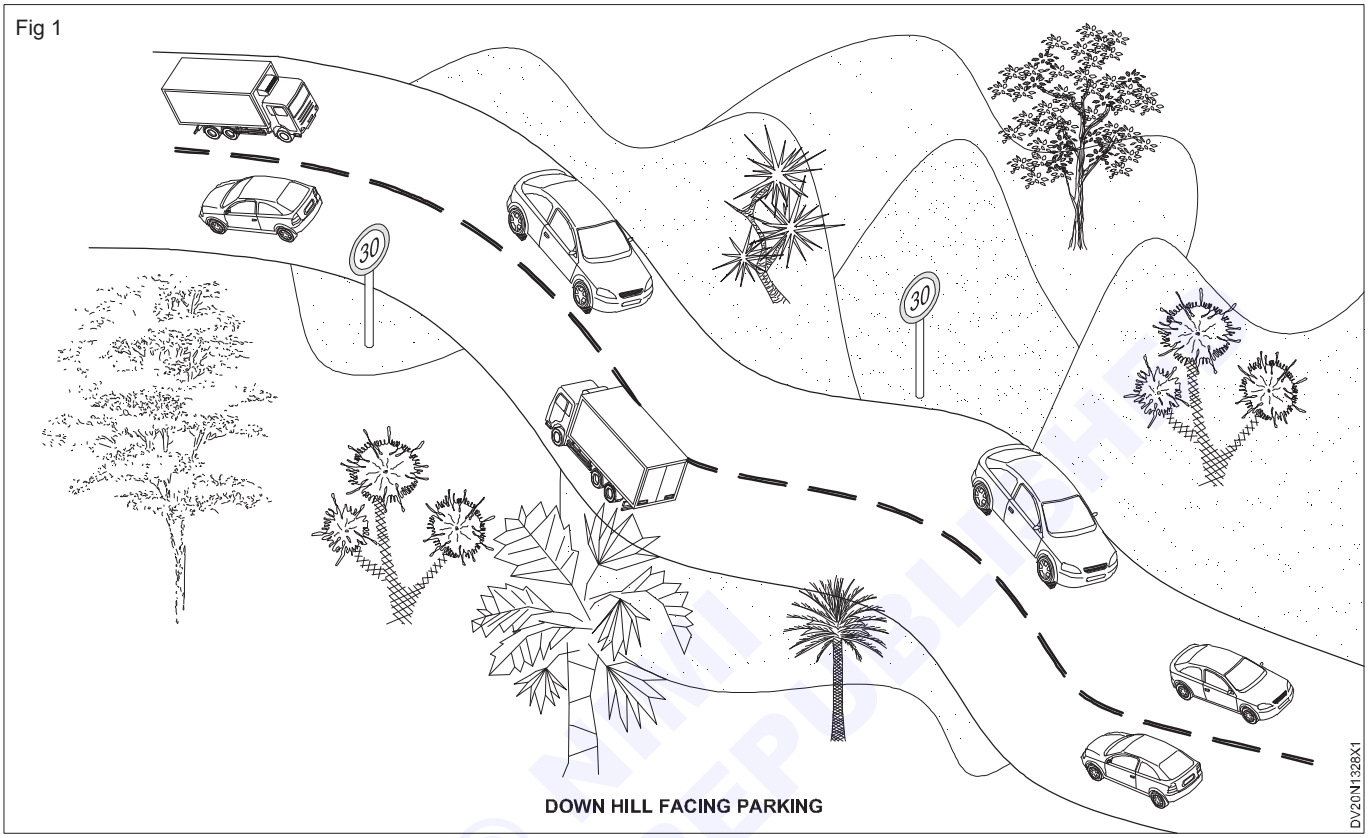

Parking the vehicle towards facing uphill

Fig 2

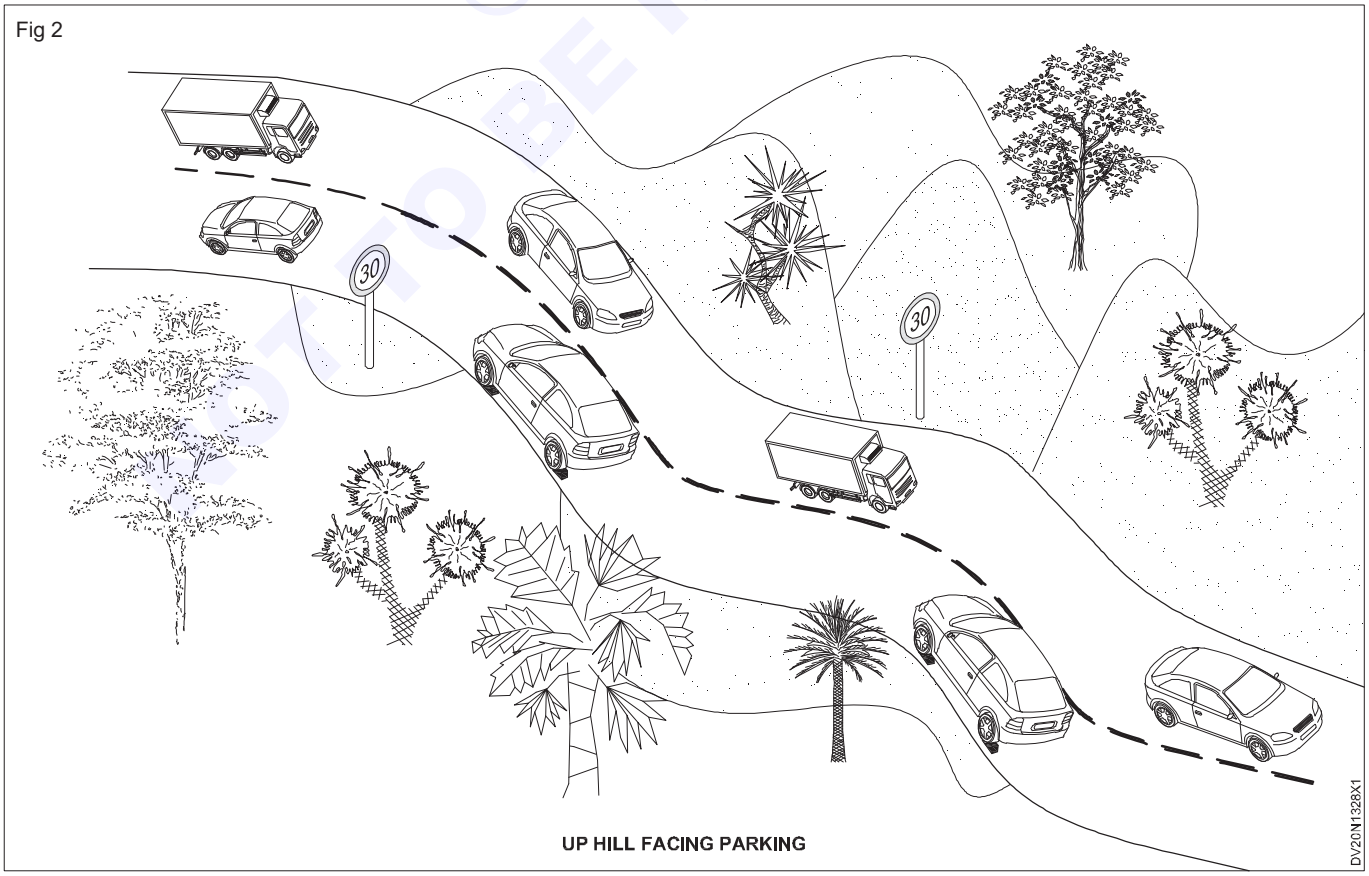

© MKCL NOT TO BE REPUBLISHED

13 Remove the vehicle chocks.

14 Start the vehicle.

15 Engage the forward gear and release the hand brake.

16 Judge the parking area distance and slope angle, parking space etc.

17 Move the vehicle by release the clutch and pressing accelerator pedal.

18 Turn your vehicle steering left and right to set at the correct position for downhill facing parking

19 Center the vehicle to center of parking space.

20 Watch the space between vehicles or both side of your vehicle.

21 Stop the vehicle and ensure your vehicle is properly parked in marked parking area.

22 Switch off the engine and engage parking brake, engage the reverse gear move safety.

23 Apply wheel chocks for your vehicle safety.

— — — — —

© NIMI
NOT TO BE REPUBLISHED

Driver Cum Mechanic (LMV) - Simulator Driving and Vehicle Pre-driving Checks

Practice on vehicle night driving

Objectives: At the end of this exercise you shall be able to
- **drive the vehicle at night.**

Requirements

Tools/Instruments

• Trainee's tool kit	- 1 No.
• Vehicle emergency kit	- 1 Set.
• Vehicle documents	- 1 Set.
• Driving license	- 1 No.
• 'L' board	- 1 No.

Equipment/Machines

• Vehicle (LMV)	- 1 No.

Materials/Components

• Cotton waste	- as reqd
• Soap oil	- as reqd
• Lube oil	- as reqd
• Coolant oil	- as reqd
• Inspection lamp	- as reqd

PROCEDURE

Steps for drive the vehicle at night.

Note: Instructor should be given proper instructions to trainee's about vehicle night driving practice.

1 Select the vehicle for night driving practice.

2 Clean and pre-driving check the vehicle.

3 Start the vehicle and check all the gauges and lights.

4 Check the dip and dim light switch functions.

5 Clean the wind screen for clear vision.

6 Switch on the head light and check the light focus.

7 Use the low beam light at normal driving and use high beams when appropriate for driving at night.

8 Engage the 1st gear and release the parking brake.

9 Move the vehicle at slow speed to driving lane of the road.

10 Don't driving practice on double lane road.

11 Don't look the opposite coming vehicle light directly.

12 Slow down at corners.

13 Always slow drive the vehicle while driving practice on the road.

14 Always prepare the defense driving

15 Keep your eyes on moving road and be alert while driving a vehicle at night.

16 Engage the low gear to up gear and up gear to low gear during your driving practice.

17 Follow the road rules and regulation at night driving practice.

18 Use the dim and bright light, while overtake the vehicle at night.

19 Always over take the vehicle in right side only.

20 While overtaking a vehicle ensure your road is clear.

21 Use the indicators while turn the vehicle left or right.

22 After driving practice move the vehicle the parking area.

23 Park the vehicle in proper parking space.

24 Switch off the all lights.

25 Stop the engine and engage the parking brake.

26 Get down from the driver seat and close the vehicle doors.

27 Apply the wheel chocks to lock the wheels.

28 Say thanks for your instructor. (Fig 1)

© NIMI NOT TO BE REPUBLISHED

Fig 1

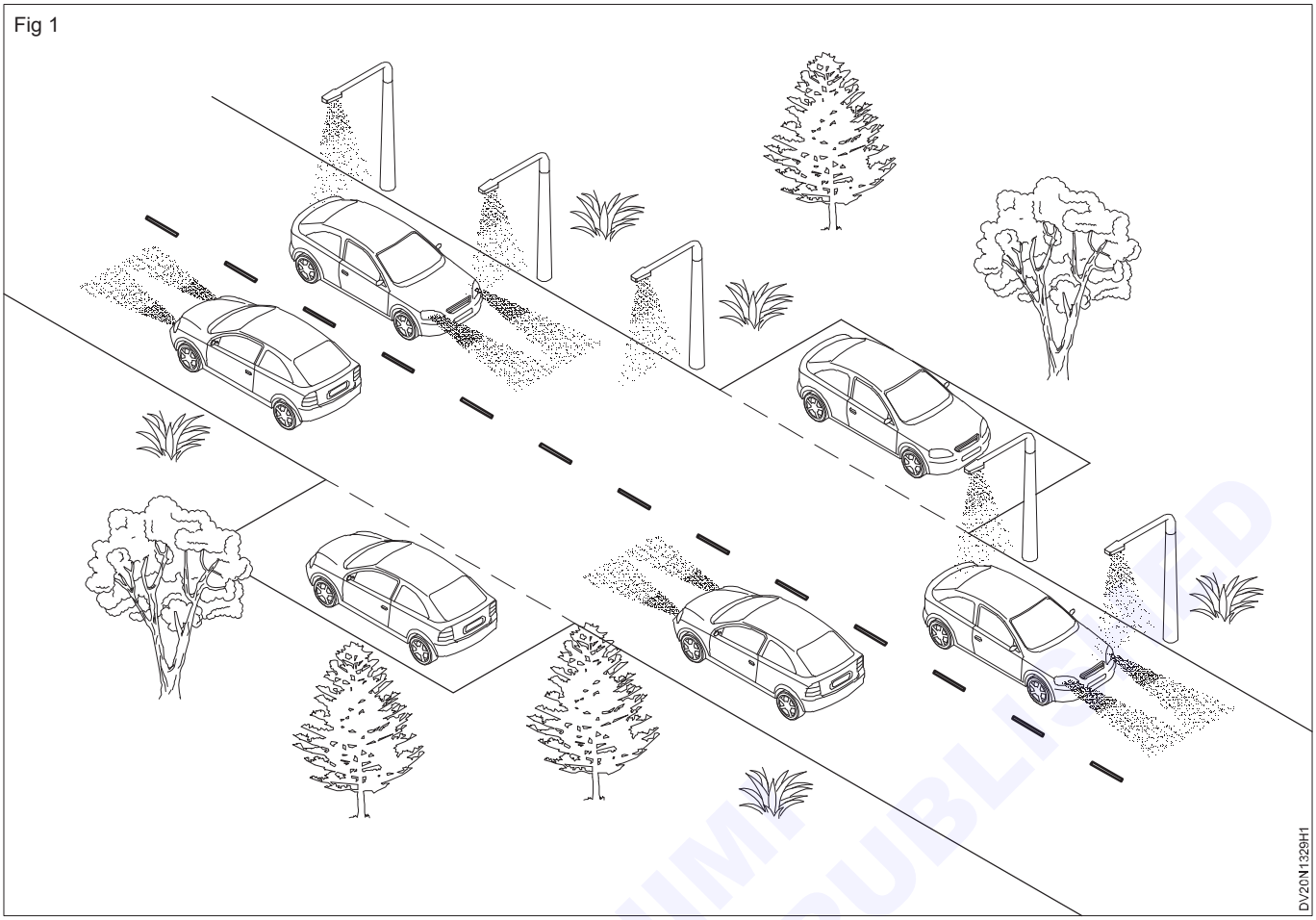

© NIMI NOT TO BE REPUBLISHED

Driver Cum Mechanic (LMV) - Simulator Driving and Vehicle Pre-driving Checks

Practice to driving a vehicle according to different road lanes

Objectives: At the end of this exercise you shall be able to
- **drive a vehicle on single lane road**
- **drive a vehicle on two way lane road**
- **drive a vehicle on four way lane road**
- **drive a vehicle on six way lane road.**

Requirements

Tools/Instruments

• Trainee's tool kit	- 1 No.
• Vehicle emergency kit	- 1 Set.
• Vehicle documents	- 1 Set.
• Driving license	- 1 No.

Equipment/Machines

• Vehicle (LMV)	- 1 No.

Materials/Components

• Cotton waste	- as reqd
• Soap oil	- as reqd

PROCEDURE

TASK 1: **Single lane road vehicle driving practice (Fig 1)**

Note:

- **A single track road is known as a country road, country route or a single lane road.**
- **Instructor has to be explained about a single track driver rules and regulations to the trainee's.**
- **Instructor should be teach by live demo on the vehicle.**

1 Select the vehicle for driving practice.
2 Clean and pre-driving checks the vehicle.
3 Start the vehicle and let it allow to warm up the engine.
4 Adjust the side view and rear view mirror.
5 Wear the seat belt and adjust the driver seat for comfortable driving.
6 Engage the 1st gear and release the hand brake.
7 Remember the road rules and regulations.
8 Use the signals while move and stop the vehicle.
9 Look the road for clearance.
10 Move the vehicle slowly by using road hand signal.
11 Drive your vehicle according road condition.
12 Follow the road rules and regulations while you are driving a vehicle on single lane road.
13 Reduce the distance between you and the vehicle ahead to maintain traffic flow.
14 Never get so close to the vehicle in front that you can't stop safely.
15 Leave enough space to be able to manoeuvre, if the vehicle in front break down or an emergency vehicle needs to get past.
16 Never over take to the left side of the vehicle.
17 Be aware of cyclist and motor cyclist who may be passing on either side.
18 Reduce the vehicle speed at approaches to road bends.
19 Only you overtake a vehicle whom passing place provided on the single track road.
20 If you see a vehicle coming towards you or the driver behind wants to overtake, pull into passing place on your left and give way to vehicles coming up hill whenever you can.
21 If necessary reverse your vehicle until you reach a passing place to let the other vehicle pass.
22 Don't park your vehicle in single track passing place.
23 Slow down the vehicle while drive on curve and hairpin bend roads.
24 Use the hand and light signals, while driving practice on the single lane.
25 Shift the vehicle gear low to high and high to low gear while you driving practice

Note:

- **Don't use the mobile while drive the vehicle.**
- **Don't use the audio system loudly, it may cause for accident.**
- **If you hear a siren or see a flashing light pull over as far as possible to the left and stop until the vehicle has passed.**

26 After driving practice, move the vehicle towards vehicle shed.

© NIMI NOT TO BE REPUBLISHED

27 Park the vehicle in parking area.

28 Apply parking brake and switch off the engine.

Fig 1

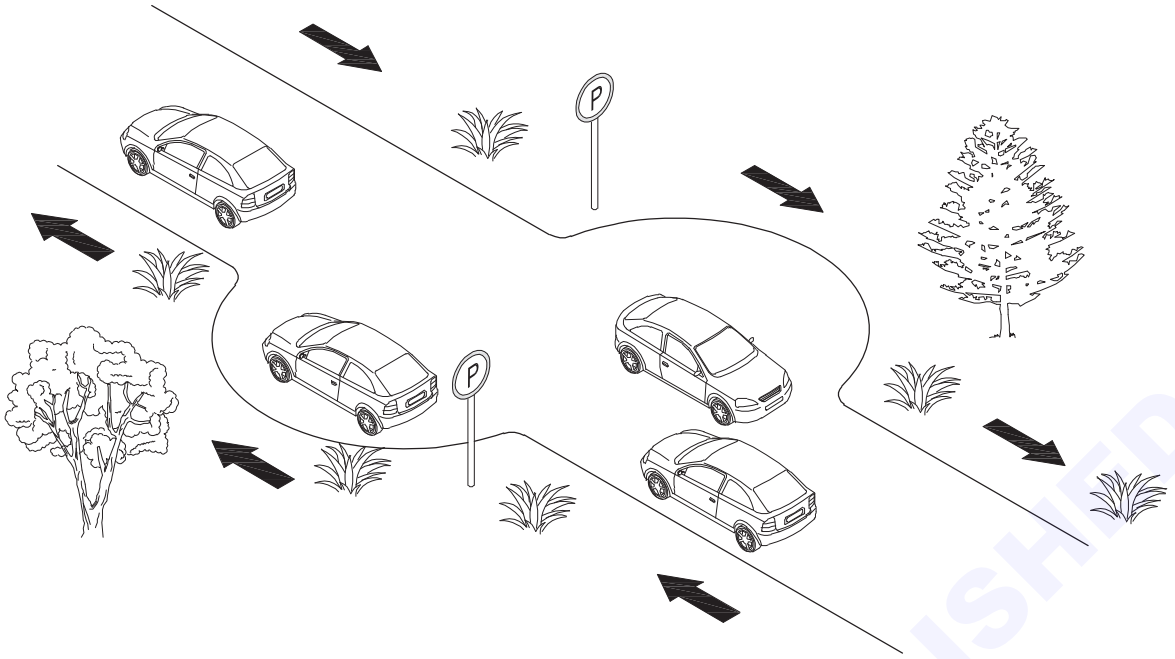

— — — — —

TASK 2: **Driving a vehicle on double track road (Fig 1)**

Fig 1

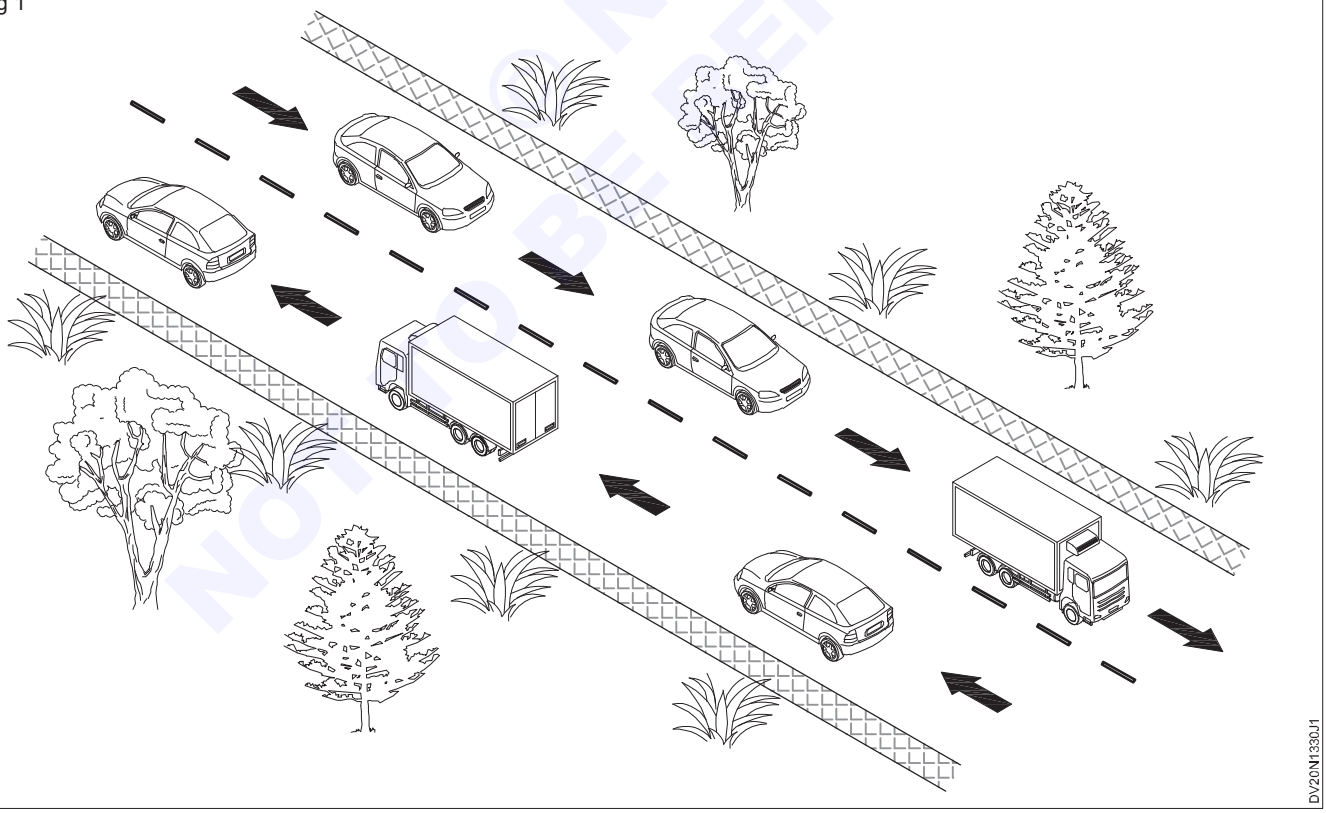

Note: Two lane road means one track for one direction and other track for opposite directional move the vehicle.

1 Start the vehicle and release the hand brake.

2 Engage the 1st gear and move the vehicle two lane roads.

3 Look at traffic signals and lane markings to ensure your vehicle passing is legal.

© NIMI NOT TO BE REPUBLISHED

4 Evaluate the road lane condition and check your surroundings.

5 Check the surrounding vehicle traffic.

6 Ensure you can pass within vehicle speed limit.

7 Ensure maintain the enough space between the vehicle in front of you.

8 Move your vehicle past at safely.

- Accelerate slowly
- Use your turn signal
- Smoothly pass over the dotted lane marker.
- Look ahead to be sure, there is no any vehicle is coming up ahead.
- Accelerate to a speed and quickly pass the vehicle.
- Always keep an eye on the vehicle you are passing to be sure, they don't speed up or move in an unexpected way.
- Keep both hands on the steering wheel while over taking a vehicle.

9 Smoothly cross back into the lane.

10 Maintain your desired speed without exceeding the limit.

11 Glance in your rear-view to check the distance of yourself and the vehicle you passed.

12 Always drive your vehicle in left lane of road.

13 Slowly drive the vehicle on curve on bend roads.

14 After driving practice, move the vehicle towards vehicle shed, for parking.

15 Park the vehicle in vehicle shed and apply parking brake.

16 Ensure vehicle is safely parked.

— — — — —

TASK 3. **Driving the vehicle on four lane road (Fig 1)**

Fig 1

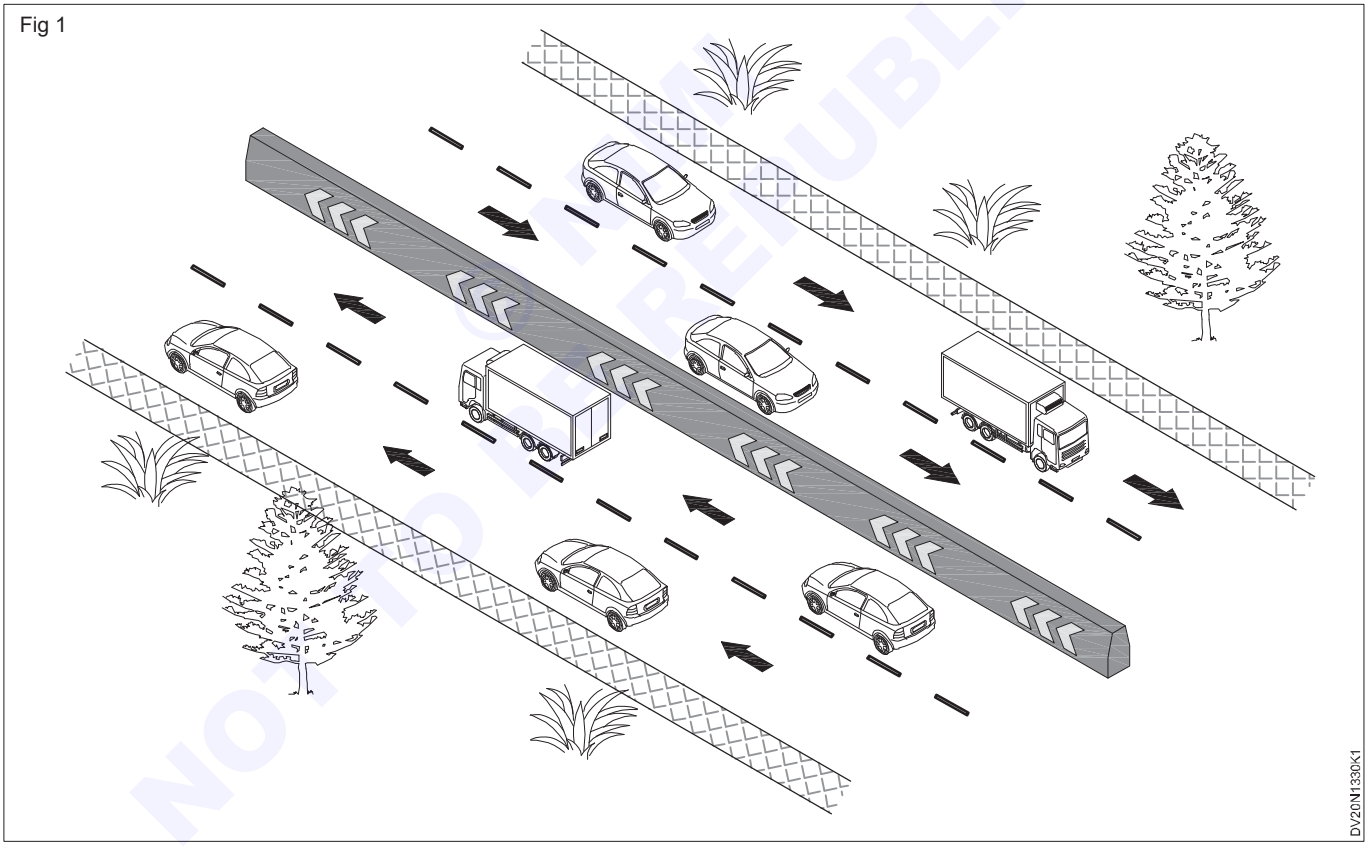

1 Study the road traffic rules and remember while drive your vehicle in four lane road.

2 Select the vehicle for driving practice.

3 Prepare the vehicle for driving.

4 Start the vehicle and check the vehicle system.

5 Engage the 1st gear and release the parking brake.

6 Scanning the road before move to the road lane.

7 Show the hand or light signal while moving your vehicle.

8 Move the vehicle to left lane of the road.

Note:

Four way road two lanes are used for one direction and another two lane are used for opposite direction as show in Fig 1

© NIMI NOT TO BE REPUBLISHED

9 Use the brake to reduce the vehicle speed or stop the vehicle.

10 Use the gears to increase or decrease the vehicle speed.

11 Leave the sufficient space to overtake the behind coming vehicle.

12 If you are overtake the vehicle after crossing the vehicle come back to your drive line.

13 Use the any one lane to drive your vehicle.

14 If you are drive slowly use the left lane, of if you are drive fast use the right lane.

15 Drive the vehicle in limited speed limit only.

16 Slow down the vehicle while crossing speed breakers.

17 Follow the road signal light for your vehicle drive.

18 Understand road signal light color red, green, yellow and blinking yellow light.

19 After driving practice move the vehicle to your vehicle parking shed.

20 Park the vehicle safely.

21 Ensure your vehicle is safely parked as per instructor's guide line.

TASK 4: **Driving vehicle on six lane road (Fig 1)**

Fig 1

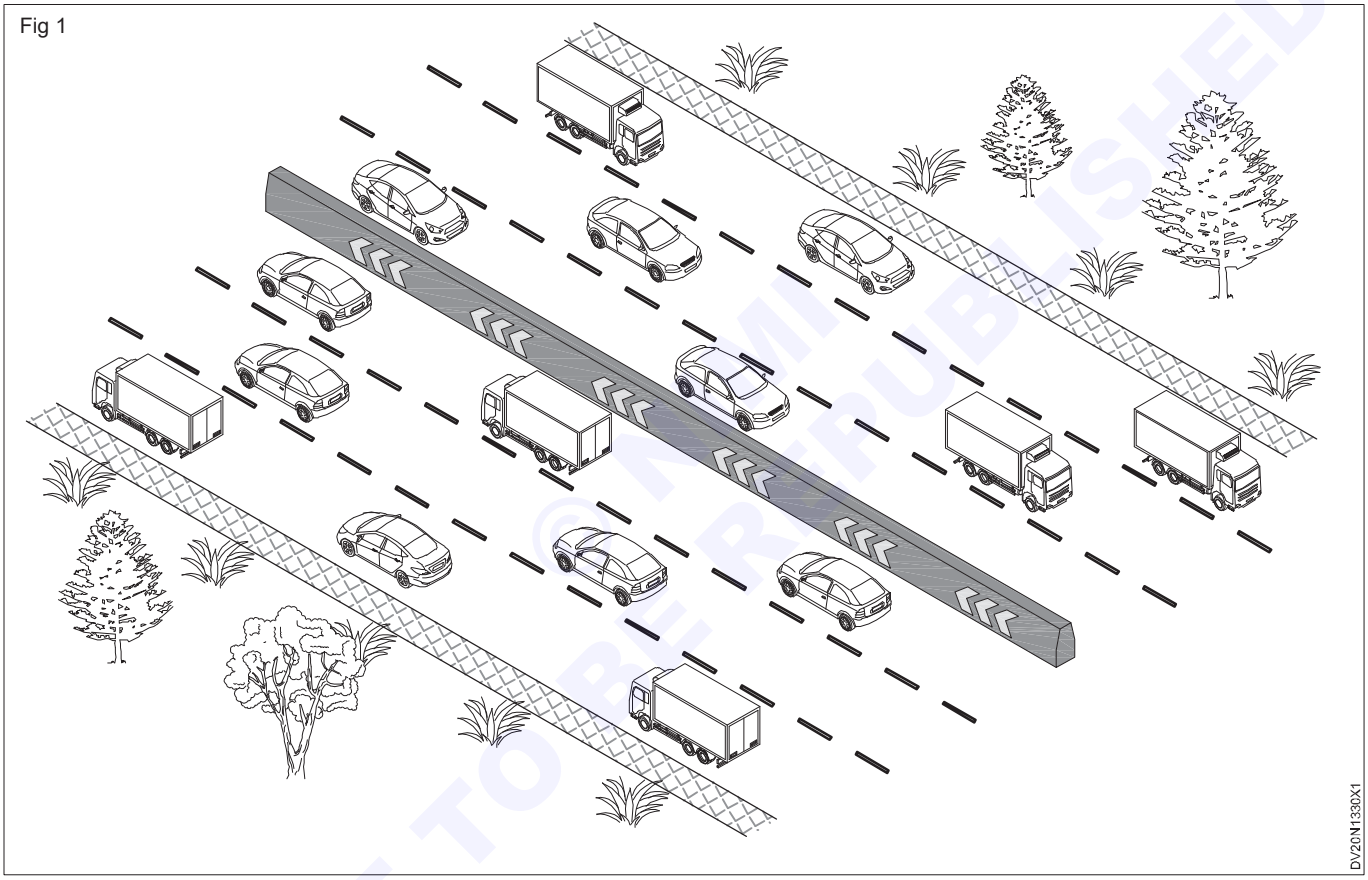

Note: Three lanes are used for one direction and another three lanes are used for opposite direction in six lane road.

1 Prepare the vehicle for driving practice.

2 Start and move the vehicle to road lane.

3 Follow the road signals while you're driving practice.

4 Use the different gear speed for improve your driving skill.

5 Use any one lane for your vehicle drive.

6 Carefully cross the one lane to another lane.

7 While crossing the lane watch the rear view and side mirrors to notice vehicle coming behind your vehicle.

8 Follow the 3 second or 5 second stop distance between a head vehicle.

9 While overtaking a vehicle use side indicator and sound horn.

10 Use the foot brakes to slowdown the vehicle or stop the vehicle.

11 Don't leave your hand from the steering, while driving practice.

12 Look ahead, right, let and behind your vehicle and be alert while you are driving the vehicle on six lane road.

13 Stop and park the vehicle after six lane road driving practice.

© NSDC NOT TO BE REPUBLISHED

Driver Cum Mechanic (LMV) - Simulator Driving and Vehicle Pre-driving Checks

Practice on village road and highway driving

Objectives: At the end of this exercise you shall be able to
- **drive a vehicle on village road**
- **drive a vehicle on highway.**

Requirements

Tools/Instruments

• Trainee's tool kit	- 1 No.
• Vehicle emergency kit	- 1 Set.
• Vehicle documents	- 1 Set.
• Driving license	- 1 No.
• `L' board	- 1 No.

Equipment/Machines

• Vehicle (LMV)	- 1 No.

Materials/Components

• Cotton waste	- as reqd
• Soap oil	- as reqd
• Lube oil	- as reqd
• Coolant oil	- as reqd

PROCEDURE

TASK 1: **Drive the vehicle on the village road**

1 Prepare the selected vehicle for driving practice.

Note: Village road driving is easier and more relaxing than driving in the city. But it is also more dangerous, village road are metalized and non metalized.

2 Start the vehicle and let it allow for few minute for idle run.

3 Choose the village road to driving practice.

4 Adjust the rear view and side mirrors for clear vision of behind your vehicle.

5 Release the hand brake and engage the 1st gear to move the vehicle.

6 Ensure your road is very clean to drive the vehicle.

Note: Village road hazards include poor lighting, or no lighting, animals on the road and poor road conditions.

7 Move the vehicle to the selected road lane.

8 Drive the vehicle according to your road condition.

9 The higher speed of a vehicle drive in village roads greatly increases the dangers of oncoming traffic and people entering the road at lower speeds.

10 Watch for hidden drive ways.

11 Make sure your stopping distance is never more greater than half the distance you can see ahead.

12 Slow down the vehicle while turn in a curve road.

13 When driving on dark road never overdrive your head lights.

14 Look the road signs and front vehicle reflectors, which are visible much farther ahead at night driving.

15 Dim your high beam when you got within 500 feet of an upcoming vehicle.

16 If the vehicle approaches you with its high beams on look to the left side of the road to avoid being blinded by the light.

17 Avoid turning on your high beams to signal the other driver while drive on the village road.

18 Look out the slow moving vehicles, bicyclist, scaring animals on the road.

19 Don't overtake the vehicle in narrow road or bridge.

20 Follow road signals and use the hand signals where ever you need while drive the vehicle on the village road.

Note: Don't park your vehicle in narrow roads or wherever vehicle passing space is not provided on side of the road.

21 Move the vehicle to vehicle parking area.

22 Park the vehicle after your driving practice.

23 Stop the engine running and apply parking brake. (Fig 1)

© NIMI NOT TO BE REPUBLISHED

Fig 1



TASK 2: **Drive the vehicle on the highway**

1 Select the vehicle for highway driving practice.

2 Pre drive check the vehicle and carried out the minor repairs.

3 Start the vehicle and let it allow to warm up.

4 Check the dash board panel gauges and warning lights functions.

5 Keep your vehicle documents, insurance policy, pollution certificate and registration papers.

6 Keep your driver license on your person.

7 Engage the 1st gear and release the hand brake.

8 Adjust the vehicle rear view mirror and side mirrors.

9 Move a vehicle from the parking area towards high way.

10 Maintain a constant speed of the vehicle.

11 Pick a highway lane.

12 Keep your distance of the vehicle at least 3 seconds worth distance with the vehicle in front of you.

13 For overtaking a vehicle, follow the car you intend to overtake at their speed.

14 Find a straight line as the point of overtake, so there in clear visibility of incoming traffic.

15 Switch to the overtaking lane with your indicator switch on.

16 Switch to gear change and accelerate the speed for overtake the vehicle.

17 Build your vehicle length distance with overtaken a vehicle and switch back to the driving lane.

18 Use the head light during night driving practice.

19 Use the head light during night driving practice.

20 Use the high beam on blinding vehicles coming towards your side.

21 Take a slow lane and be patient with all your moves.

22 However when overtaking switch to the level head lamps with your turn indicator and then overtake.

Note:

- **Keep your windscreen clean to ensure optimum visibility.**
- **Start in the right lane.**
- **Change lanes carefully.**
- **Stay alert and focused.**
- **Driving practice during a non-busy time.**

23 After driving practice safely move the vehicle to parking shed.

24 Park the vehicle in parking shed, apply parking brake.

25 Switch off the engine. (Fig 1)

© NIMI NOT TO BE REPUBLISHED

Fig 1

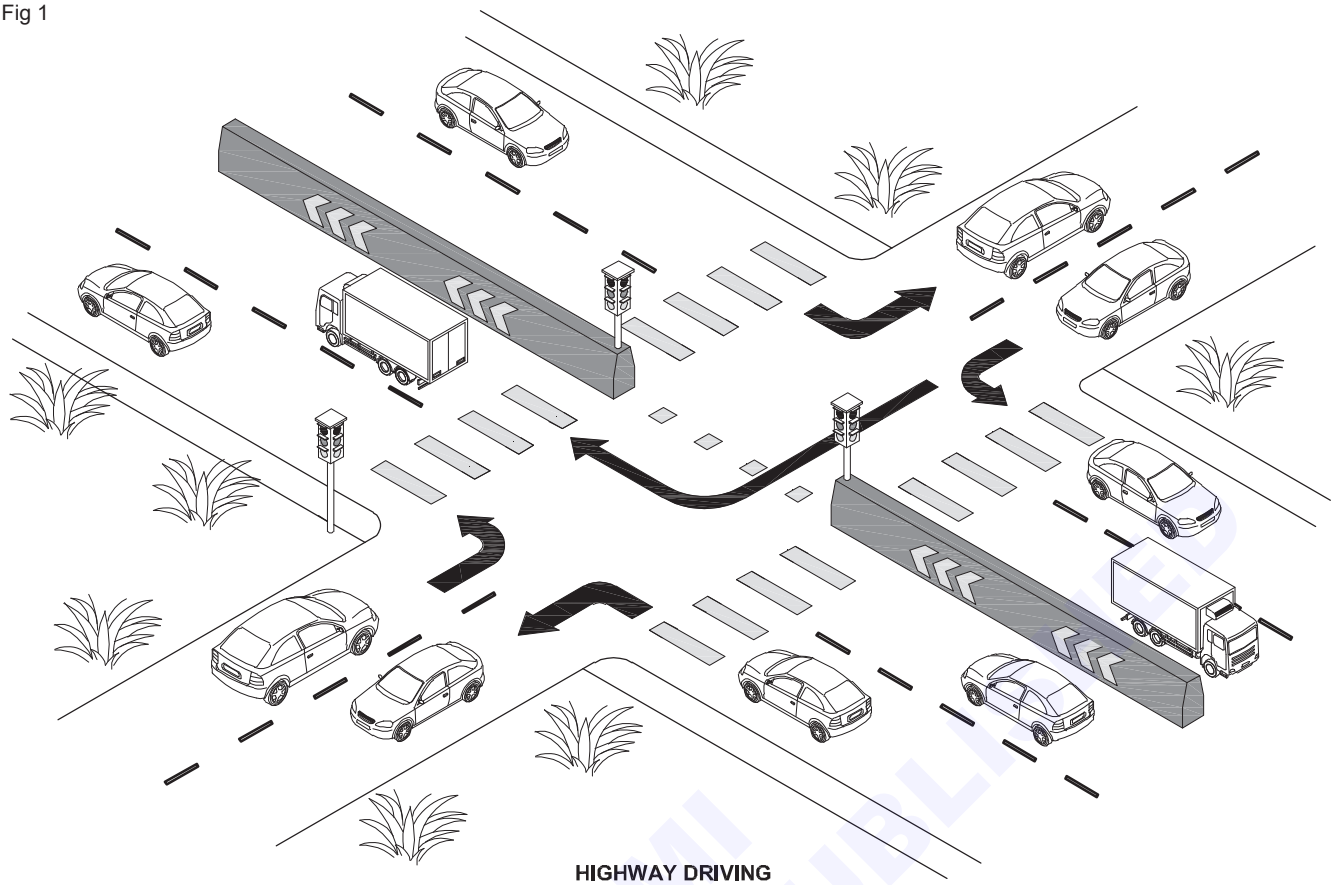

HIGHWAY DRIVING

DV20N1331J1

© NIMI NOT TO BE REPUBLISHED

Driver Cum Mechanic (LMV) - Simulator Driving and Vehicle Pre-driving Checks

Practice on vehicle driving in crowded street

Objectives: At the end of this exercise you shall be able to
- **drive a vehicle in crowded street.**

Requirements

Tools/Instruments

• Trainee's tool kit	- 1 No.
• Vehicle emergency kit	- 1 Set.
• Vehicle documents	- 1 Set.
• Driving license	- 1 No.
• `L' board	- 1 No.

Equipment/Machines

• Vehicle (LMV)	- 1 No.

Materials/Components

• Cotton waste	- as reqd
• Soap oil	- as reqd

PROCEDURE

Drive a vehicle in crowded street (Figs 1&2)

Note:

- **Don't drive your vehicle without `L' board display.**
- **Hang the `L' board front and rear of the vehicle.**
- **Drive slowly in crowded street.**
- **Use the signal lights and brake while drive the vehicle in crowed street.**
- **Stop the vehicle for anyone crossing the street by walk.**
- **Always stop and check in both directions for vehicle, pedestrians before crossing a sidewalk at drive way or alley.**
- **When turning a vehicle in a street corner, check for pedestrian crossing in both side the street you are on and the one you are turning into.**

1 Select the vehicle for driving practice.

2 Prepare the vehicle for driving practice.

3 Start the vehicle and check the engine performance.

4 Engage the 1st gear and move the vehicle to crowded street for driving practice.

5 Stop the vehicle in street road entrance.

6 Check and analysis the street road traffic.

7 Engage the 1st gear and move the vehicle at slow speed.

8 Use the hand and light signals while turn your vehicle in street corner road.

9 High speed driving in crowded street leads to accidents.

10 Drive safely on crowded streets.

11 Don't follow the vehicle too closely.

12 Drive your vehicle defensively.

13 Keep your eyes scanning traffic and street road conditions.

14 Identify vehicles that appear unsafe such as those that are erratically merging across lanes, speeding dangerously or drifting within a lane.

15 Allow plenty of space between you and other vehicles.

16 Never drive while you are emotionally agitated.

17 Plan your driving times to avoid heavy traffic in the street.

18 Play attention to heavy traffic in the distance.

19 Drive your vehicle in acceptable speed when approaching heavy traffic.

20 Don't be too slow drive in heavy traffic street road.

21 By slowing your vehicle speed may cause for heavy traffic in crowded street.

22 Use lower gear to improve your engine efficiency.

23 Allow a two second distance between you and traffic vehicle in front of you.

24 Always drive below the speed limit permit in that area.

25 Always be prepare yourself for emergency manoeuvres.

26 Always keep your eyes scanning traffic of the crowded street.

27 Leave the free way if you feel too uncomfortable.

28 Maintain a constant speed that is slightly slower than slightly below the flow of your front vehicle.

© NIMI NOT TO BE REPUBLISHED

Note:

- **Understand the crowded street layout of area and which portions are most heavily traveled can make the driving practice in less stressful.**
- **Avoid crowded street driving practice, during peak volume of foot traffic in the street road.**
- **Crowded driving makes many starts and stops so it is important to proper maintenance of the vehicle.**

29 Use the brake to slow or stop the vehicle.

30 Use the head light and other lights as on weather condition required.

31 Park the vehicle in the crowded street parking marked on the side of the crowded street road.

32 After crowded street road driving practice, park the vehicle in prescribed parking area.

Fig 1



Fig 2

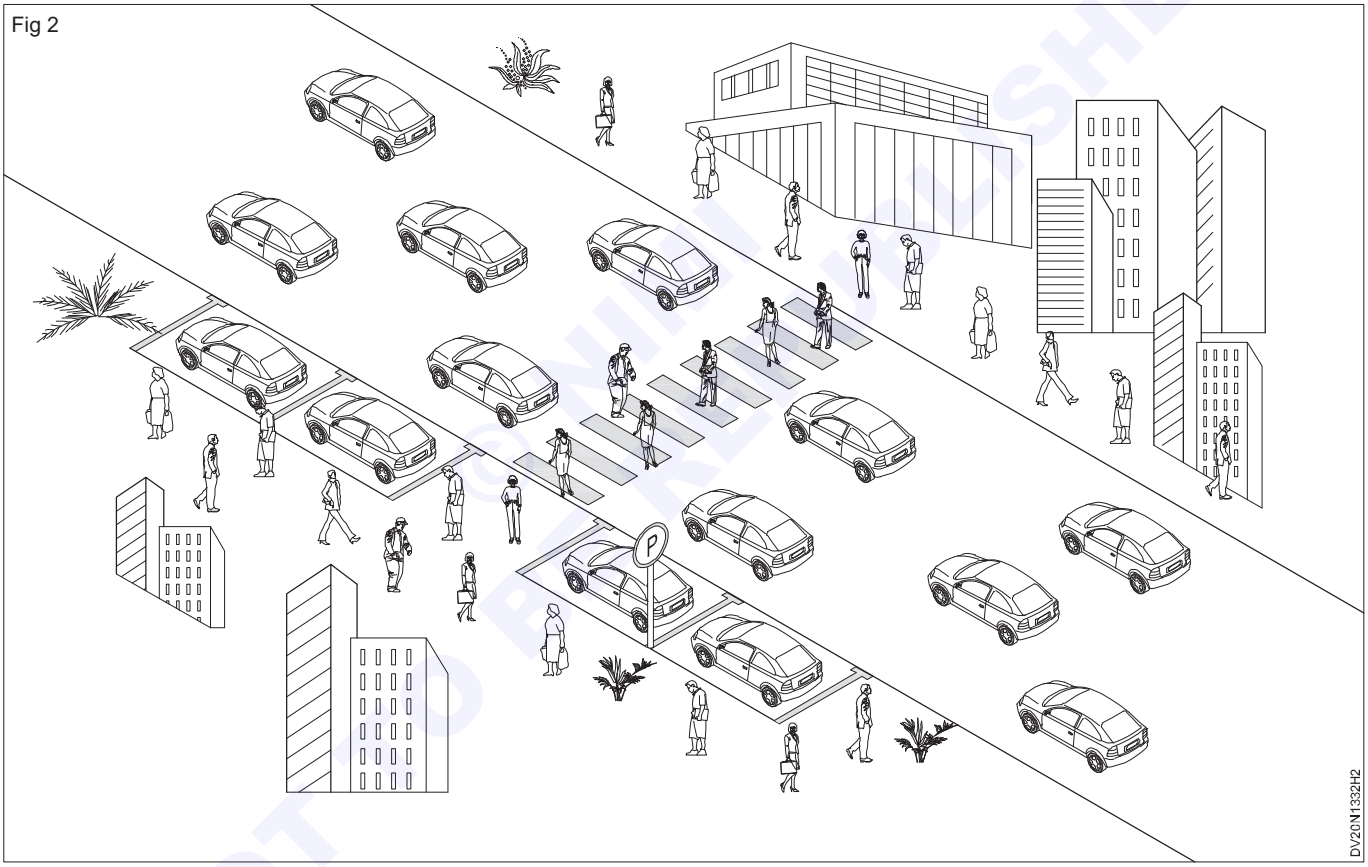

NOT TO BE REPUBLISHED

Driver Cum Mechanic (LMV) - Simulator Driving and Vehicle Pre-driving Checks

Practice to perform cross country driving

Objectives: At the end of this exercise you shall be able to
- **drive the vehicle in cross country road.**

Requirements

Tools/Instruments

- Trainee's tool kit - 1 No.
- Vehicle emergency kit - 1 Set.
- Vehicle documents - 1 Set.
- Driving license - 1 No.
- `L' board - 1 No.

Equipment/Machines

- Vehicle (LMV) - 1 No.

Materials/Components

- Cotton waste - as reqd
- Soap oil - as reqd
- Lube oil - as reqd
- Coolant oil - as reqd

PROCEDURE

Drive a vehicle on the cross country road. (Fig 1)

Fig 1



1 Select the vehicle for driving in cross country road.

2 Prepare the vehicle for driving practice.

3 Check the vehicle as per pre driving standard check list.

4 Select the cross country road and seen the road for driving practice.

Note: Instructor should be briefed about the cross country road's positive and negative characters for their driving trainee's.

© NIMI BE REPUBLISHED

5 Start the vehicle and use safety personal protective equipment.

6 Adjust the vehicle mirrors for your comfortable rear view vision of your vehicle.

7 Engage 1st gear and release the hand brake to move the vehicle.

8 Move the vehicle from parking shed to cross country road lane.

9 Bring your vehicle to slow speed road lane.

10 Follow the road rules and regulations to ensure your safety while driving a vehicle in cross country road.

11 Drive your vehicle on left side of the road.

12 Your eyes should be ahead of your vehicle.

13 Change the gears (Vehicle speed) as on road condition.

14 Your main focus is on your driving.

15 Don't get distracted by loud music or talking with co-driver, or by talking on the mobile phone while driving the vehicle.

16 Follow the road traffic signals to avoid accidents.

17 Always maintain road lane discipline while you are driving vehicle. (Fig 2)

18 Never overtake a vehicle by changing lanes on busy road.

19 If you change lanes or turn your vehicle give a signal by hand or side indicator lights.

20 Maintain a safe distance from your ahead vehicle.

21 Don't overtake a vehicle on curve bend or desert roads.

22 Always overtake a vehicle from the right side of ahead going vehicle.

23 Give a way for emergency vehicles (Ambulance, Fire service, VIP vehicles etc.)

24 Ensure your safe driving practice on cross country road as per following instructors guide line.

25 End of your cross country road driving practice, safely drive the vehicle to vehicle parking shed or yard.

26 Park the vehicle in proper position and neutral the gear.

27 Switch off the engine and apply hand brake.

28 Say thanks to your instructor.

Note: Before park the vehicle clean it well with clean water.

Fig 2

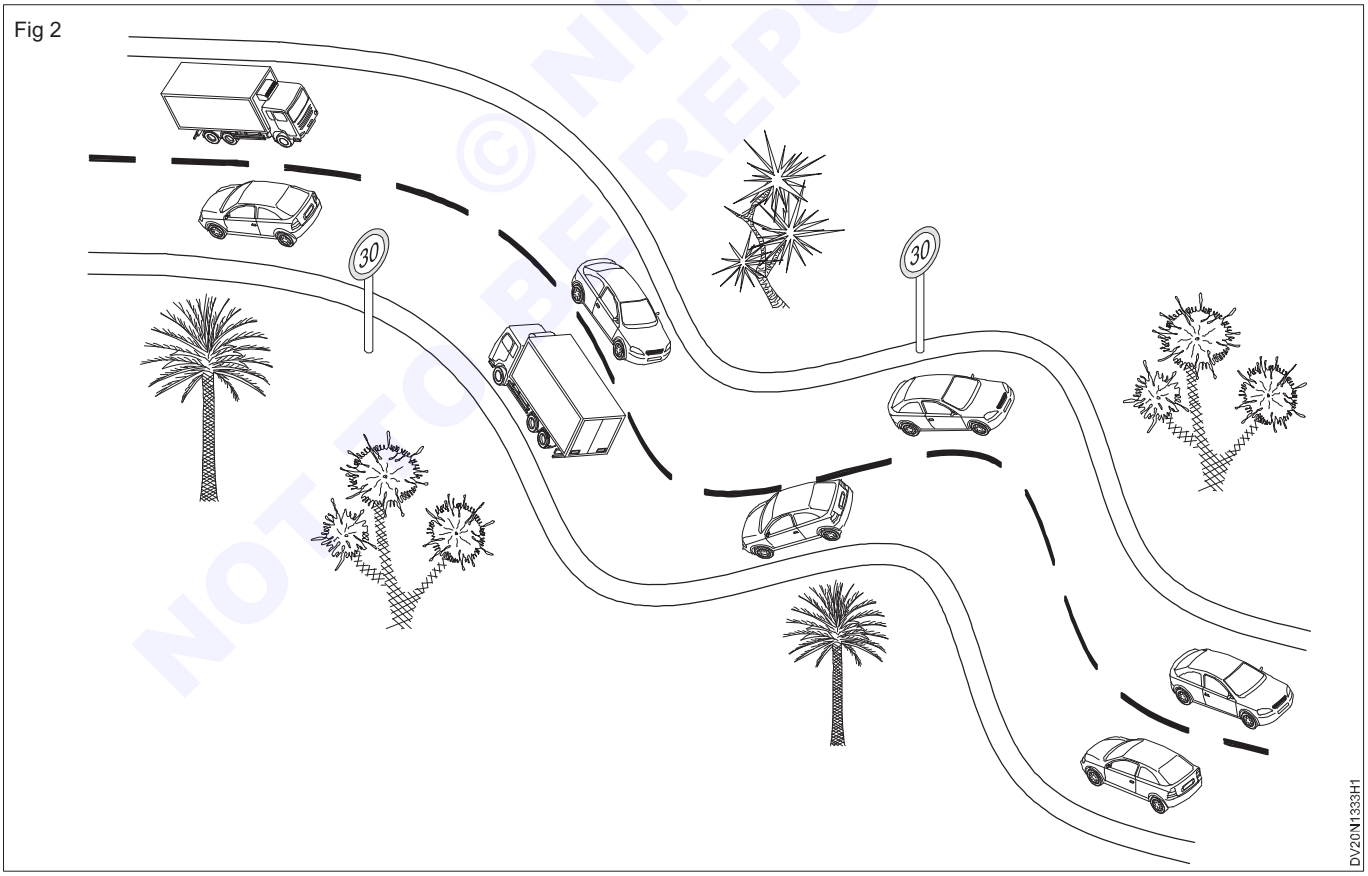

© NIMI NOT TO BE REPUBLISHED

Driver Cum Mechanic (LMV) - Simulator Driving and Vehicle Pre-driving Checks

Practice on vehicle hill driving by using four wheel drive

Objectives: At the end of this exercise you shall be able to

- **drive a vehicle in up hill road**
- **drive a vehicle in down hill road**
- **drive a vehicle in hairpin bend road**
- **drive a vehicle in wet/sandy surface.**

Requirements

Tools/Instruments

- Trainee's tool kit - 1 No.
- Vehicle emergency kit - 1 Set.
- Vehicle documents - 1 Set.
- Driving license - 1 No.
- `L' board - 1 No.

Equipment/Machines

- Vehicle (LMV) - 1 No.

Materials/Components

- Cotton waste - as reqd
- Soap oil - as reqd
- Lube oil - as reqd
- Coolant oil - as reqd
- Brake fluid - as reqd

PROCEDURE

TASK 1: **Driving a vehicle on a uphill road**

1 Select the vehicle for hill driving practice.

2 Clean the vehicle and pre-driving check the vehicle.

3 If need top up oil, coolant, brake fluid.

4 Ensure your vehicle tyre air pressure and tyre condition is in good position.

5 Ensure that a `L' board is provided in front and rear of the vehicle.

6 Start the engine and let it allow to warm up.

7 Observe the various gauges on the dash board and check the function of panel board warning lights.

8 Release the parking brake and move the vehicle on a straight road by engaging 1st gear.

9 Move the vehicle slowly while showing/indicating the signal lights.

10 Ensure that the vehicle is on the left side of the road.

11 Accelerate the accelerator pedal gradually for increase the engine speed.

12 Change the gears as required for road conditions and speed limit.

13 Change the gears smoothly by pressing clutch pedal.

14 Drive the vehicle towards hill road.

15 Scan the hill roads vehicle traffic.

16 Enter your vehicle in hill road lane and downshift to first or second gear before climbing a step hill.

17 Drive the vehicle in low gear while drive up hill road.

18 Follow the road traffic signals/

19 Always keep to your left, while overtaking it should be done on the right side.

20 When passing stationary vehicles, keep a watch on upcoming vehicles and pedestrians who may come out suddenly from the front of the stationary vehicle.

21 Drive slowly on a narrow winding uphill road.

22 When traffic is held up in up hill road, never try to force your way by encroaching on the off-side of the road.

23 Do not overtake on bends of the uphill road.

24 Overtake only when a driver in front of you gives the signal to do so, and always overtake on the right side.

25 Always keep a good distance between your vehicle and ahead goring and behind coming vehicle.

26 Too close driving in up hill road is dangerous it may leads an accident your vehicle.

27 Always park the vehicle at specified places of up hill road.

28 Always use the turn indicator signal when turning your vehicle.

29 Drive slowly and carefully on a where a school or hospital is situated near the uphill or down hill road.

30 While reversing your vehicle ensure that sufficient space is available for reversing the vehicle.

© NIMI NOT TO BE REPUBLISHED

31 Never try to overtake on hill roads in fog, mist or rain fall sharp bend and congested junction roads.

32 Do not try to reverse your vehicle ensure that sufficient space is available for reversing the vehicle.

33 Use the lower gear to increase the pull power and avoid the roll back the vehicle.

Note:

- **Avoid running a car air condition to prevent over-heating of engines.**
- **Always engage your parking brake when you park the vehicle in uphill and down hill road parking.**
- **Engage the first gear along with parking brake while vehicle facing towards up hill.**
- **Use the parking brake if you stop the vehicle at a red light signal in uphill and down hill road to avoid vehicle (slipping) roll backwards.**
- **Use the parking brake, if you stopped on a uphill road.**

34 Follow the instructor's guide line while driving practice in uphill driving.

35 After driving practice stop the vehicle in parking space to reverse the vehicle to drive on down hill road. (Fig 1)

Fig 1



TASK 2: **Driving the vehicle in downhill road**

Note:

- **Never shift the gear into neutral while driving a vehicle down a hill road.**
- **Avoid constant use of brakes when going down a hill.**
- **Always use the lower gear according the road traffic sign board indicate speed limit.**
- **Never cross the centre line while drive the vehicle in downhill or up hill road.**

1 Start the engine and release the hand brake.

2 Turn the vehicle to down hill road direction.

3 Use the indicator lights while reverse the vehicle and changeover to the road lane.

4 Ensure the downhill road is clear.

5 Engage the low gear and move the vehicle on the slope road.

6 If any vehicle is coming from the opposite side stop your vehicle and give preference to vehicles climbing up in uphill road.

7 Slowly move your vehicle towards downhill.

8 Keep the vehicle to the left side of the road.

9 Be alert and use the service brake to reduce the speed of the vehicle.

10 Use the side indicator and sound horn while turn your vehicle in downhill bend road.

11 Mind the posted speed limits and look for signs that warn you about the steep grades that may be ahead.

12 Keep an eye out for animals specially during day and night drive.

13 If you are slow drive your vehicle, let allow to pass faster drive vehicle.

14 Never overtake on a blind curve or never pass another car on a blind curve on hair pin bend downhill roads.

Note:

- **If you are stopping the vehicle, use your parking brake and apply wheel chocks, front of your vehicle tyres to help keep your vehicle from rolling towards downhill.**
- **Don't park the vehicle in dead slope space. (Fig 1)**

Fig 1

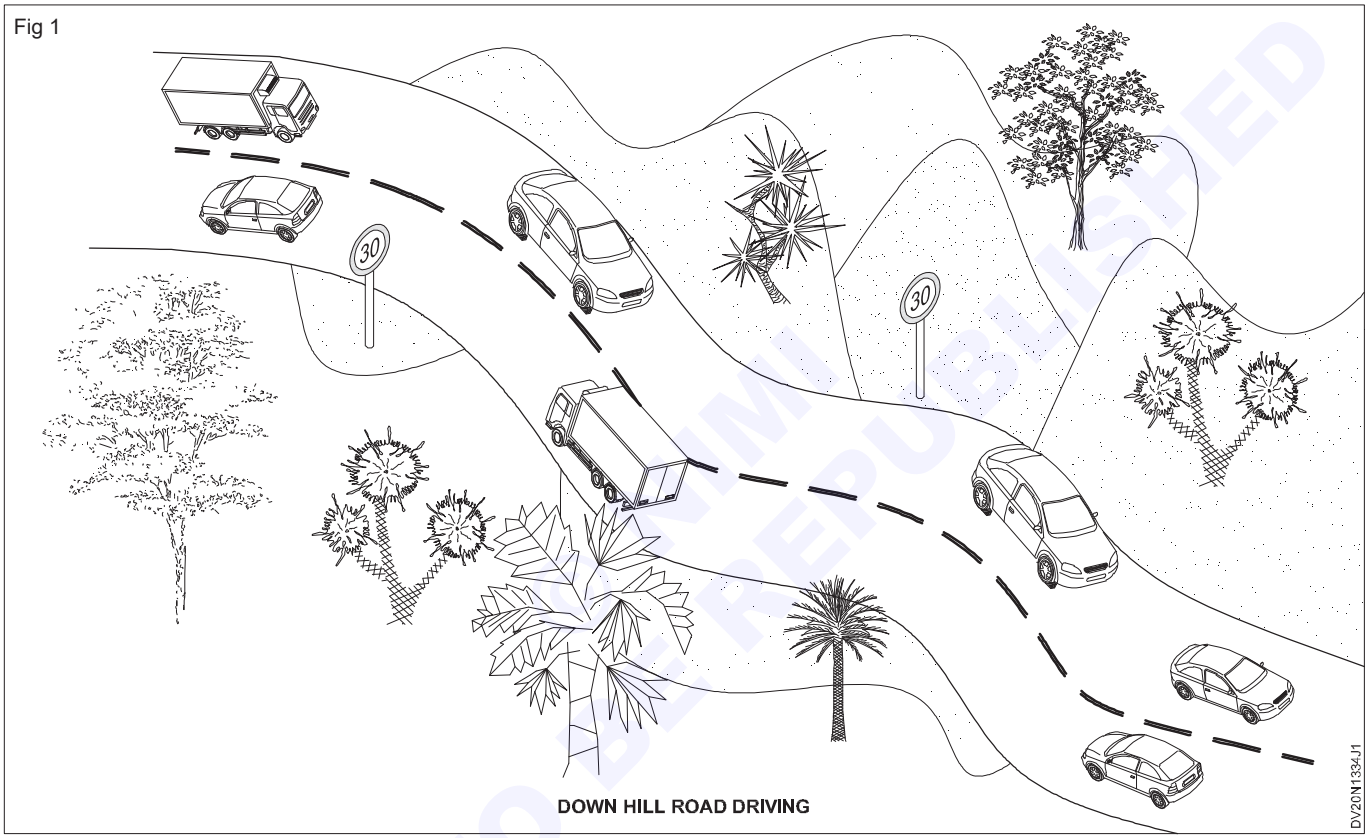

TASK 3: **Driving a vehicle on hairpin bend roads**

1 Start the vehicle and check the function of gauges and instrument and warning lights.

2 Engage the 1st gear by pressing clutch pedal.

3 Release the clutch pedal slowly and press the accelerator pedal to vehicle smooth move.

4 Track the vehicle on the road lane.

5 Drive the vehicle in the left side of the road.

6 Keep your eye on front of your vehicle.

7 Follow the road traffic signs and light signals.

8 While drive your own hairpin bend road don't allow to pass the vehicles.

9 Keep the safety distance 4 to 10 seconds stop.

10 Use the indicator while turn/drive your vehicle at hairpin bend of the hill road.

11 Use the low gear to reduce the vehicle speed.

12 Never drive in neutral gear.

13 Use the service brake along with service brake while apply brake on emergency.

14 Carefully drive the vehicle in hairpin bend on the road structure.

15 Don't take short turn on hairpin bend roads.

16 Keep the distance between side passing vehicle and your vehicle. (Fig 1)

17 Shift the gear to manage your vehicle speed limits as per road condition or traffic speed limit sign board.

NOT TO BE REPUBLISHED

Fig 1



Hair pin bend road

Note:

- **Use the head light dipper switch to operate the low beam and high beam light focus during night drive.**
- **Use the high beam while turn your vehicle in hair pin bend road.**

- **Use the sound horn and side indicator, while drive your vehicle in hairpin bend road.**
- **Don't reverse practice in hairpin bend road.**

18 After drive practice move the vehicle parking shed.

— — — — —

TASK 4: **Driving a vehicle with four wheel drive (Fig 1)**

Note: Two wheel drive is used in plain surface ground and four wheel drive is used in wet and sandy surface or cross country road.

1 Select the four wheel drive vehicle for driving practice.

2 Study the vehicle gear shifting mechanism with reference of owners operating manual.

Note: Instructor should be explain about the vehicle two wheel drive mechanism and four wheel drive mechanism to their trainee's with the help vehicle power transmission system chart.

Instructor should be show the two wheel drive shifting and four wheel drive shifting system by live demo on vehicle.

3 Start the vehicle engine and let it allow to warm up.

4 Study gear shift lever positions.

5 Practice the gear shifting four by two drive and four by four drive by passing clutch pedal.

6 Engage the 1st gear by pressing clutch pedal in four by two drive position.

7 Release the clutch pedal slowly and accelerate the accelerator pedal gradually.

8 Move the vehicle smoothly by releasing parking brake.

9 Move the vehicle to sandy or wet surface.

10 Drive your vehicle on marked track on sandy or wet surface.

11 Drive the vehicle by changing gear and give sufficient acceleration for your vehicle smooth drive in sandy road.

12 If the vehicle wheels begin to spin declutch and switch over to four wheel drive and reduce the gear speed upper to lower.

13 Drive the vehicle in 10 km/ph speed or as low as possible and don't accelerate too much.

Note: Don't drive the vehicle in 4x4 drive for long distance, it may cause for over heat the engine and damage the transfer case.

© NIMI NOT TO BE REPUBLISHED

14 Disengage the 4x4 drive and engage the 4x2 drive when vehicle comes onto the solid surface.

15 Do four wheel drive practice in many times as you satisfied in your driving.

16 Move the vehicle to vehicle parking area and park the vehicle in yard or shed.

17 Switch off the engine and apply parking brake, if need apply wheel chocks. (Fig 2)

Fig 1

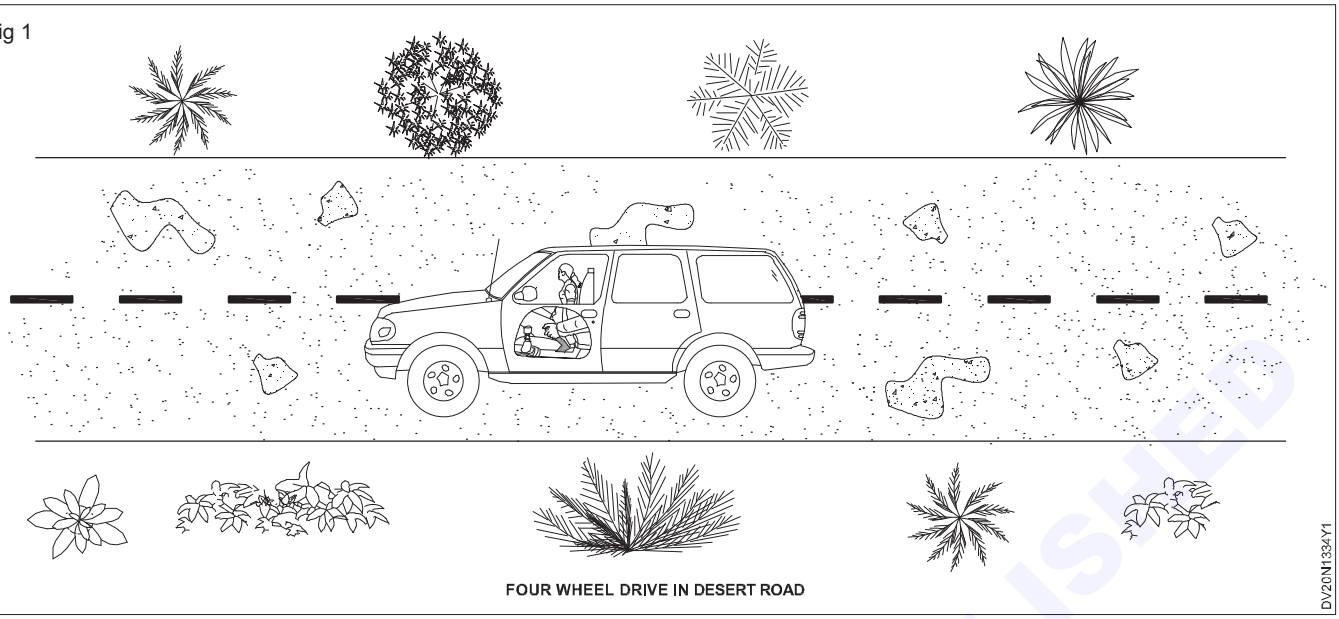

FOUR WHEEL DRIVE IN DESERT ROAD

DV20N1334Y1

Fig 2

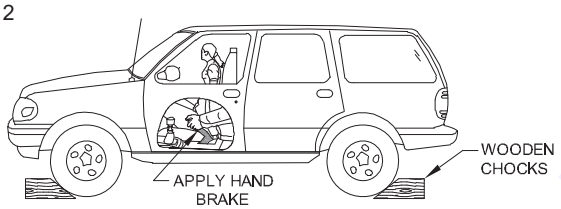

DV20N1334Y2

© NIMI NOT TO BE REPUBLISHED

Driver Cum Mechanic (LMV) - Simulator Driving and Vehicle Pre-driving Checks

Practice to towing a vehicle

Objectives: At the end of this exercise you shall be able to
- **towing a brake down vehicle.**

Requirements

Tools/Instruments

• Trainee's tool kit	- 1 No.
• Vehicle emergency kit	- 1 Set.
• Vehicle documents	- 1 Set.
• `L' board	- 1 No.

Equipment/Machines

• Vehicle (LMV)	- 1 No.

Materials/Components

• Cotton waste	- as reqd
• Soap oil	- as reqd
• Coolant oil	- as reqd
• Lube oil	- as reqd
• Purchase repair kit	- as reqd
• Brake fluid	- as reqd

PROCEDURE

Towing a break down vehicle.

1 Select the recovery vehicle to drive.

2 Study the vehicle owner's manual for achieve the knowledge about the vehicle operation.

3 Prepare the vehicle for towing a brake down vehicle.

4 Get information about the brake down vehicle (Vehicle type, type of brake down, distance from your spot etc.)

Note: Instructor has to be shown live demo on recovery vehicle.

How to attach the brake down vehicle with recovery vehicle.

What are the precautions to be observed, while recovery a brake down vehicle (during attaching, lifting and transporting a brake down vehicle)

5 Start the recovery vehicle engine and let it allow to run idle speed.

6 Check the function of dash board gauges and panel warning lights.

7 Ensure all the recovery tools and equipments are stored in a recovery vehicle.

8 Press the clutch and operate winch gear.

9 Check the function of winch gear by release a clutch pedal.

10 Release the winch by pressing clutch pedal.

11 Accommodate your co-driver or helper with your vehicle.

12 Engage the first gear by pressing clutch pedal and release parking brake.

13 Slowly release the clutch pedal and simultaneously gradually press the accelerator pedal to move the vehicle smoothly.

14 Move the vehicle by showing move signal.

15 Ensure the vehicle is on the left side of the road.

16 Accelerate the vehicle gradually.

17 Change gears as required speed of the vehicle.

18 Show the slow down signal to stop the vehicle near brake down vehicle.

19 Move the vehicle to the left side of the road.

Note: Before moving the vehicle to left side observe the rear view mirror and left side mirror to note a vehicle coming behind your vehicle.

20 Show the stop signal and stop the vehicle near brake down vehicle and apply parking brake and switch on a parking lights inspect the breakdown vehicles.

21 Prepare the brake down vehicle to tow with your recovery vehicle.

22 Select the vehicle towing method (tow hook attach method, lifting method, trailer load method) depend upon a vehicle condition. (Fig 1)

23 Use the tow bar to attach the brake down vehicle with recovery vehicle tow hook.

24 Attach the vehicle with tow bar and lock the tow hook.

25 Use the red flag and red light on the top of the recovery vehicle driver cabin.

26 Ensure brake down vehicle is properly towed with your recovery vehicle.

© NIMI NOT TO BE REPUBLISHED

Fig 1

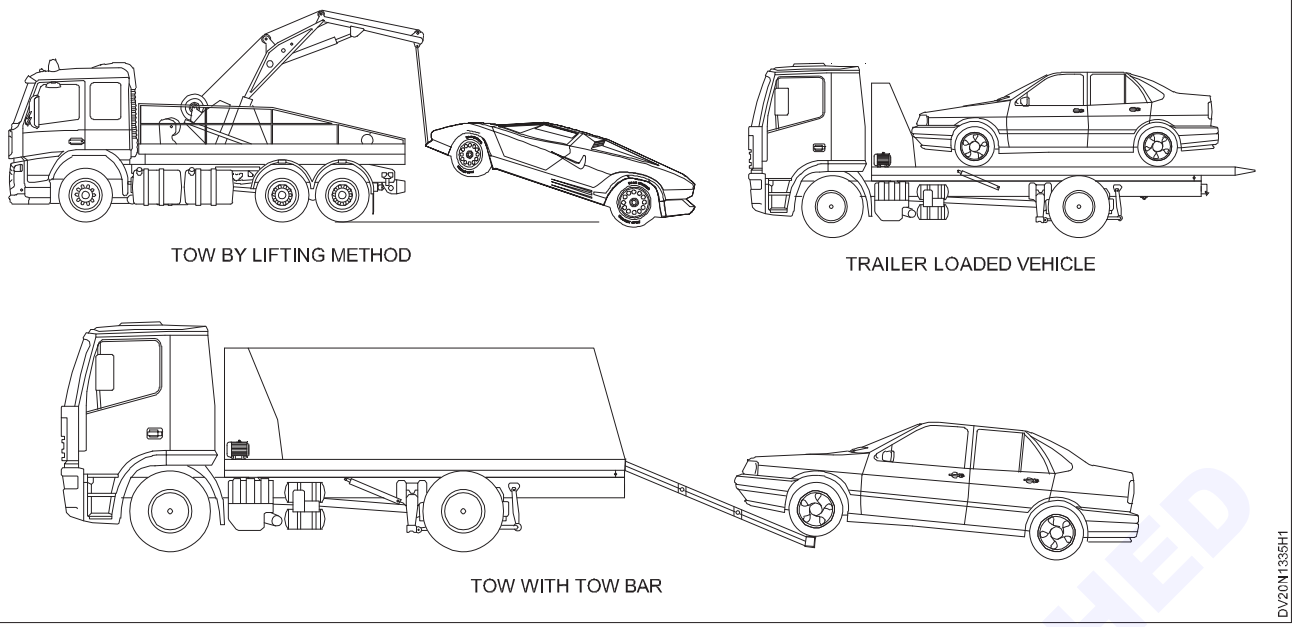

27 Start the vehicle and engage the 1st gear to move the vehicle.

28 Ensure suppose your vehicle is attached with trailer, connect the brake hose and electrical connections.

29 Move the vehicle by showing signal.

30 Maintain a more space when changing lanes, passing, entering free way and turning corners.

31 Increase the following distance at least four seconds on the free way.

32 Drive the vehicle in the right lane except when passing.

33 Avoid sudden turns and sudden stops which can cause jack knife or sliding or twist the vehicle.

34 When turning, move farther into the intersection before starting the turn and adjust your lane position to increase the turning radius.

Note: Crosswinds, slippery corners, sudden swerves, low tyre air pressure or improper loading can cause for accident.

35 Improper trailer loading / towing can cause for serious safety problems.

36 Drive the recovery vehicle to vehicle repair shop.

37 Carefully drop the brake down vehicle in vehicle repair bay by engaging forever and reverse for proper placing and dropping the vehicle.

38 Collect your towing tools and equipments, pack it in your vehicle.

39 Start the vehicle and release the hand brake.

40 Engage the 1st gear and drive the vehicle to vehicle parking shed.

41 Park the vehicle safely and apply parking brake.

42 Switch off the engine and ensure all vehicle systems are not in function.

— — — — —

© NIMI NOT TO BE REPUBLISHED

Driver Cum Mechanic (LMV) - Simulator Driving and Vehicle Pre-driving Checks

Practice to stopping the vehicle by using hand brake

Objectives: At the end of this exercise you shall be able to
- **stop the vehicle by using hand brake.**

Requirements

Tools/Instruments

- Trainee's tool kit - 1 No.
- Vehicle emergency kit - 1 Set.
- Vehicle documents - 1 Set.
- License - 1 Set.
- `L' board - 1 No.

Equipment/Machines

- Vehicle (LMV) - 1 No.

Materials/Components

- Coolant oil - as reqd
- Lube oil - as reqd
- Brake fluid - as reqd
- Cotton waste - as reqd
- Soap oil - as reqd
- Brake fluid - as reqd

PROCEDURE.

Stopping the vehicle by using a hand brake.

1 Select vehicle for driving practice.
2 Prepare the vehicle for driving practice.
3 Start the engine and let it allow to warm up
4 Sit on the driver seat and adjust seat for your comfortable driving.
5 Wear seat belt and adjust rear view mirror and side mirrors.
6 Check the function of hand brake, foot brake and clutch dash board gauges, warning lights etc.
7 Engage the 1st gear pressing clutch pedal.
8 Move the vehicle by releasing clutch and simultaneously gradually pressing accelerator pedal for smooth move the vehicle.
9 Show the hand signal for move the vehicle.
10 Slowly drive the vehicle towards road lane.
11 Keep your vehicle on left lane of road.
12 Drive the vehicle by shifting gears as per your speed requirement.
13 Apply foot brake for reducing your vehicle speed.
14 Apply foot brake for stop the vehicle, if the foot brake is failure to work, immediately use the emergency brake to control your vehicle.

Note:
- **Hand brake is known as parking brake or emergency brake.**
- **Hand brake is normally used for stop vehicle movement while vehicle is parked in parking area.**
- **Hand brake is used in uphill driving for avoid the vehicle roll in reverse.**
- **Hand brake is used in road traffic signals while engine run in idle speed and neutral gear position.**

Hand brake using method. (Fig 1)

Fig 1

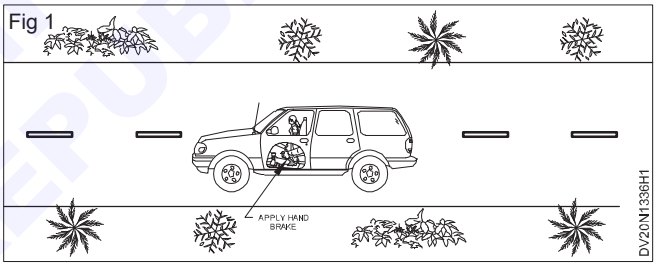

15 When the vehicle is moving in certain speed, reduce the vehicle speed by shifting higher gear to lower gear.
16 Apply foot brake to stop the vehicle.
17 Minimize the accelerator pedal pressing.
18 Press the hand brake push button or lever.
19 Pull the hand brake lever towards upward movement to stop the vehicle.
20 Remove your leg from brake, clutch and accelerator pedal.
21 Ensure the vehicle is fully stopped.
22 Shift the gear lever into neutral gear position.
23 Practice to stop the vehicle by applying hand brake many times until for your self satisfaction.

Note: Some modern vehicle has electronic emergency brake, even though its function is same as mechanical parking brake.

Parts of the hydraulic brake system. (Fig 2a & Fig 2b)

Brake pedal (1)

Brake pedal return spring (2)

© NIMI NOT TO BE REPUBLISHED

Brake push-rod (3)

Master cylinder (4)

Brake flexible houses (5)

Brake steel pipe lines (6)

Brake pipe line unions (7)

Parking brake cable (8)

Hand brake lever (9)

Stop light switch (10)

Fig 2a

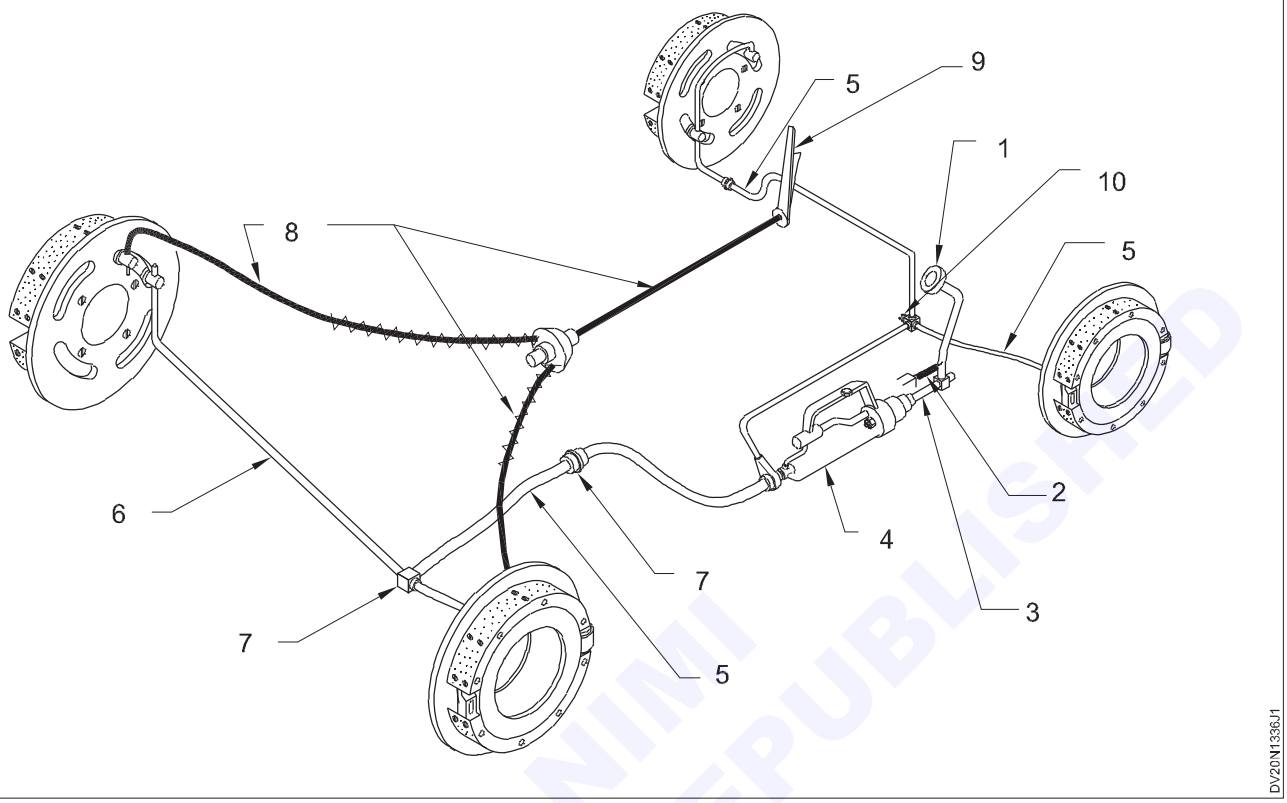

Fig 2b

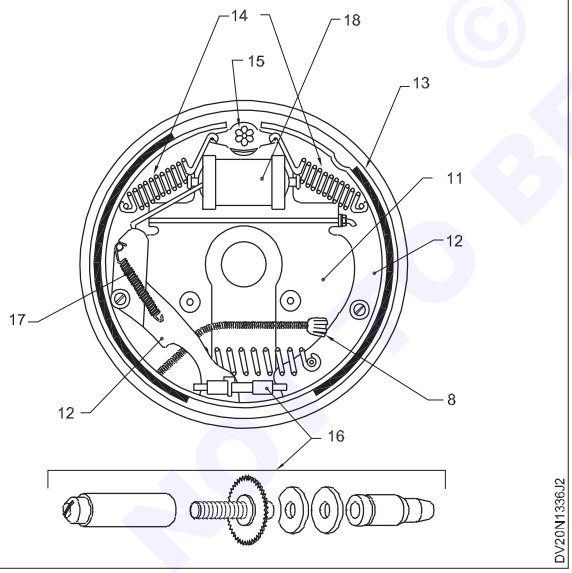

© NIMI NOT TO BE REPUBLISHED

Driver Cum Mechanic (LMV) - Simulator Driving and Vehicle Pre-driving Checks

Practice on simulator driving with simulation of extreme condition

Objectives: At the end of this exercise you shall be able to
- **perform simulator driving practice with simulation of extreme condition.**

Requirements

Tools/Instruments

- Trainee's tool kit - 1 No.
- Simulator manual - 1 No.

Equipment/Machines

- Driving simulator with software installed - 1 No.

Materials/Components

- Banyan cloth - as reqd
- Soap oil - as reqd

PROCEDURE.

Simulator driving with simulation of extreme conditions.

Note: Instructor has to be provide driving simulator to the trainee's and show live demo on simulator with simulation of extreme condition driving in different area by using software.

1 Prepare the simulator for driving practice.

2 Study the simulator user manual to achieve knowledge about the operation method of simulator.

3 Sit on the simulator's driver seat.

4 Wear seat belt and power on the simulator.

5 Identify specific controls of the simulator.

6 Check the function of each controls, before enter the driving practice.

7 Choose the specific area wish to driving practice.

8 Remember the theory learned about simulator.

Note: Simulator driving is no replacement for the actual road driving. Although a driving simulator will help the trainee's at first, trainees have to practice driving in the real world in order to fully learn how to drive on road, cross country road, hill terrain and desert & wet land drive.

9 Start the driving simulator and engage the gear by use the gear shift lever.

10 Practice simulator vehicle control tasks until you can do them without fear.

11 Test various braking sceneries' to learn how to safely stop your simulator car.

12 Use the traffic sign sceneries' to practice responding to different road traffic signs.

13 Practice vehicle turning and changing road lanes by using turn signals.

14 Avoid going over the speed limit or being distracted while driving.

15 Practice to park your simulator car in variety of parking spots, like straight, diagonal, forward, reverse, parallel parking, uphill parking downhill parking etc.

16 Gain driving experience with driving in both manual and automatic transmission setting.

Note: State the simulator software drive area as your choice to driving license.

17 Handling dangerous driving conditions by using simulator car.

18 Practice driving with lots of other crowded cars around you with manual and automatic car transmission.

19 Practice simulator driving at night to get accustomed to driving by darker settings in simulator.

20 Practice simulator driving in rainy condition to experience driving on slick surface.

21 Practice simulator driving in snow covered road.

22 Practice simulator car driving in rural and urban roads according to road traffic signs.

23 Drive a simulator car in bustling city centers by using road signals, brake, clutch, accelerator and steering etc.

24 Set the simulator hill drive mode.

25 Practice simulator driving on steep inclines (uphill driving, downhill driving, snow hill road driving etc.)

© NIMI NOT TO BE REPUBLISHED

26 Practice a simulator driving with vehicle passing, overtaking, stop and go turning, reversing etc.

27 Set the simulator highway driving mode.

28 Drive a simulator car simulated highway to practice driving under heavy stress like your front vehicle sudden braking, drive in center lane, not given passing for your vehicle, etc.

29 Set the simulator in cross country road mode.

30 Practice simulator in cross country road mode.

31 Practice simulator car driving in different weather conditions by using lights, signal indicators, hand signals, sound horn, low speed gear and high speed gears, etc.

32 End of the driving practice do the all activity like actual vehicle stopping and parking practice.

33 Switch off the simulator and come out from the simulator car driver seat. (Fig 1&2)

Fig 2

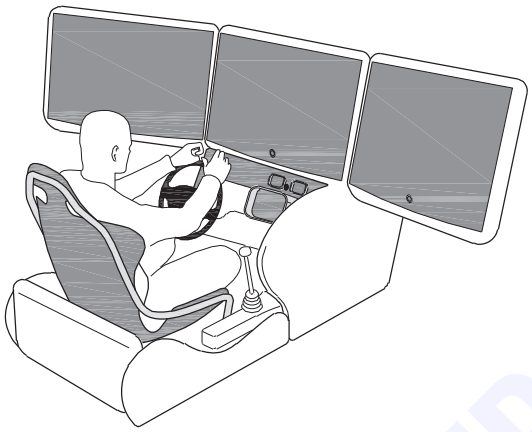

DRIVING SIMULATOR

DV20N1337H1

Fig 1

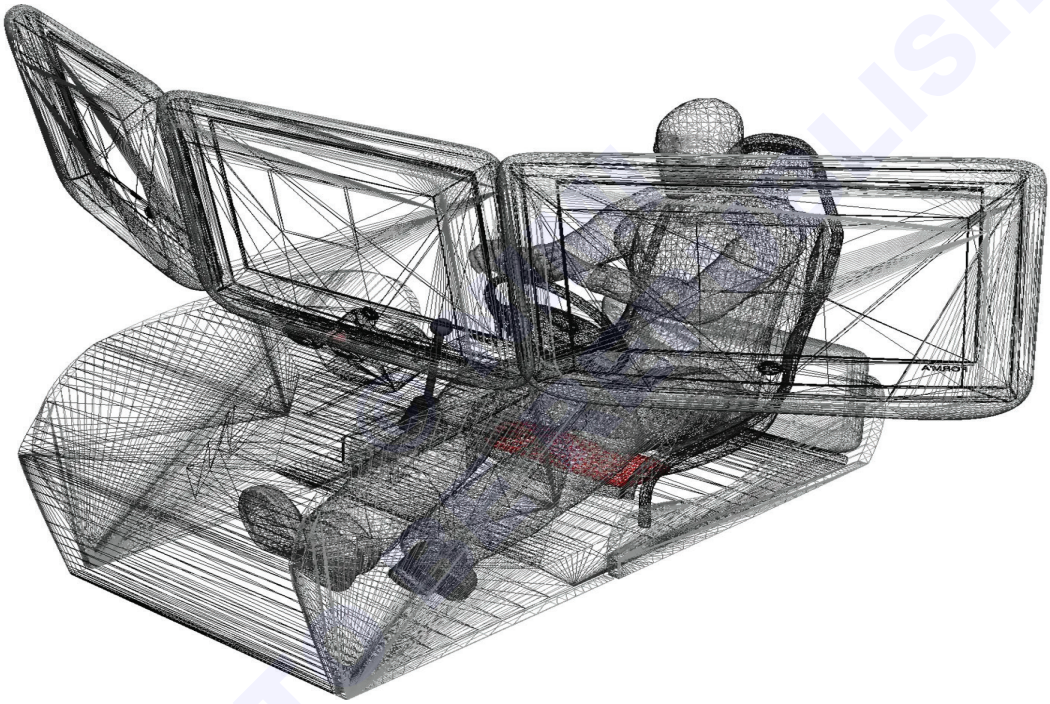

— — — — —

NOT TO BE PUBLISHED

Practice on drive a vehicle in various road as per road rules and regulations

Objectives: At the end of this exercise you shall be able to
- **drive a vehicle on various road.**

Requirements

Tools/Instruments

• Trainee's tool kit	- 1 No.
• Road sign chart	- 1 No.
• Traffic rules chart	- 1 No.
• Vehicle emergency kit	- 1 No.
• Vehicle document	- 1 No.

Materials/Components

• Cotton waste	- as reqd
• Soap oil	- as reqd
• Coolant oil	- as reqd
• Lube oil	- as reqd
• Brake fluid	- as reqd

Equipment/Machines

• Vehicle (LMV)	- 1 No.

PROCEDURE

Road safety rules and regulation for driving a vehicle on various road.

1 Select the vehicle for driving.

2 Prepare the vehicle for driving practice on various roads.

3 Study road signs and traffic rules and regulation (Figs 1 - 4).

Fig 1

CAUTIONARY SIGNS (OLD)

1 ROUGH ROAD
2A ZIGZAG RIGHT
2B ZIGZAG LEFT
3 WARNING AND CROSS-ROAD
4 GUARDED LEVEL CROSSING
5 UNGUARDED LEVEL CROSSING
6A TURN RIGHT.
6B TURN LEFT.
7 SCHOOL ZONE
8 DEAD END CROSS ROAD
9A SIDE ROAD RIGHT
9B SIDE ROAD LEFT
10 STEEP HILL
11 FERRY
12A HAIRPIN BEND RIGHT
12B HAIRPIN BEND LEFT
13 NARROW BRIDGE
14 ROUND ROAD (OR) RING ROAD
15 DEPTH ROAD (OR) CAUSEWAY ROAD
16 SPEED BREAKERS (OR) BUMP ROAD
17 OVERHEAD CHANNEL
18 CAUTION ROAD
19 SOUND HORN.
20 PEDERSTRAIN CROSSING

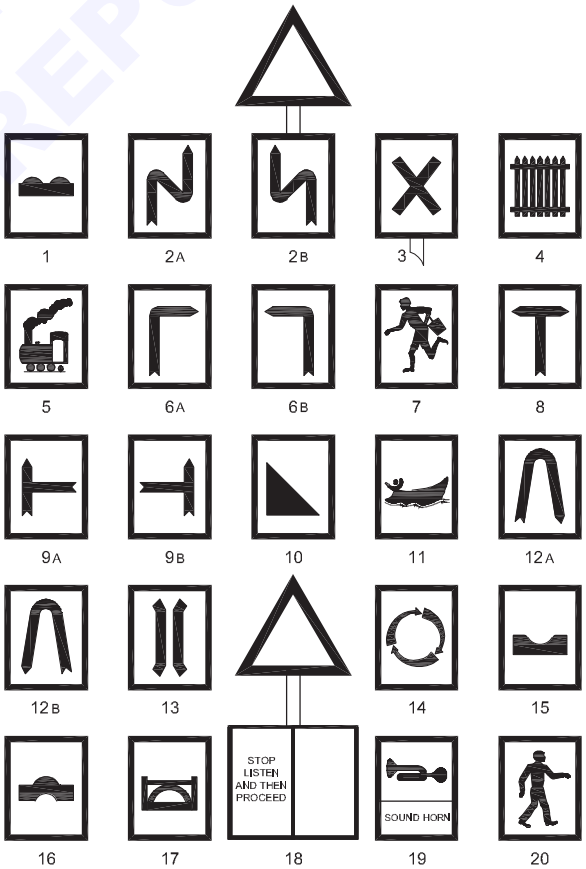

CAUTIONARY SIGNS (OLD)

DV20N1438H1

© NIMI NOT TO BE REPUBLISHED

Fig 2

MANDATORY SIGNS (OLD) (A)

1 SPEED LIMIT
2 CLOSED TO AXLES OVER 6 TONS.
3 ROAD CLOSED
4 GO LEFT.
5 NO PARKING
6 NO OVERTAKING.
7 HORN PROHIBITED.
8 DEAD SLOW
9 'A' RIGHT SIDE NOT ALLOWED.
'B' LEFT SIDE NOT ALLOWED.
10 LORRY NOT ALLOWED
11 'U' TURN PROHIBITED
12 RESTRICTION ENDS.

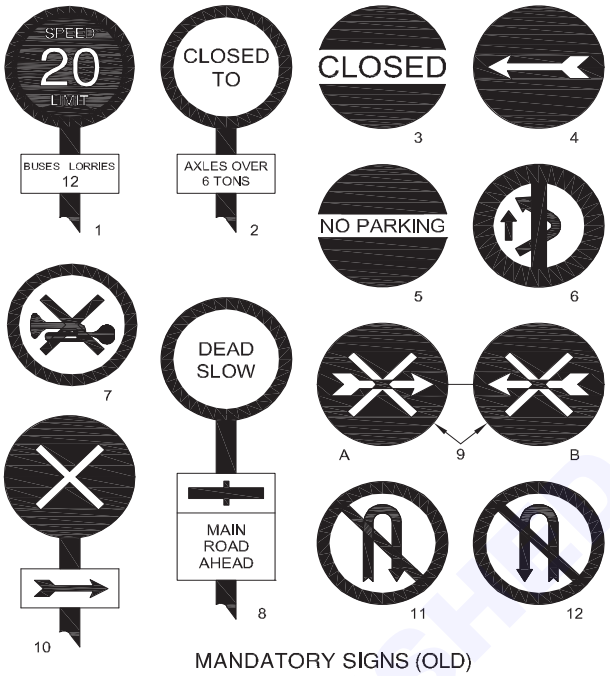

MANDATORY SIGNS (OLD)

DV20N1438H2

Fig 3

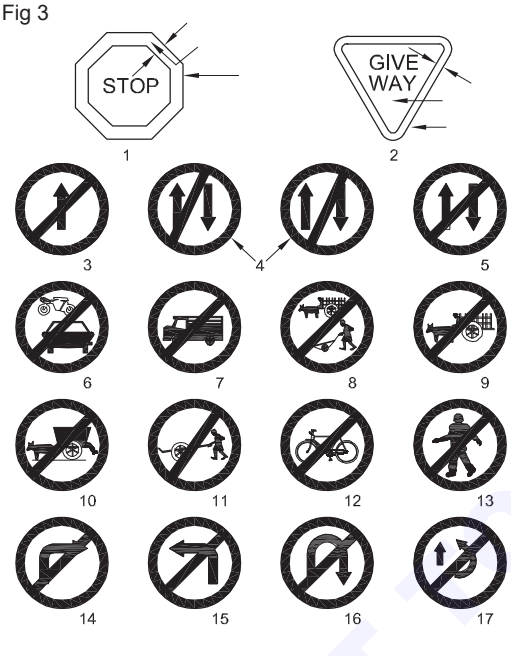

REGULATORY SIGNS (NEW-PROPOSED)



REGULATORY SIGNS (NEW-PROPOSED)

REGULATORY SIGNS

(NEW)
1 STOP.
2 GIVE WAY.
3 STRAIGHT PROHIBITED - NO ENTRY.
4 ONE WAY
5 VECHILES PROHIBITED IN BOTH DIRECTIONS.
6 ALL VEHICLES PROHIBITED.
7 TRUCK PROHIBITED.
8 BULLOCK CART AND HAND CART PROHIBITED.
9 BULLOCK CART PROHIBITED.
10 TONGA PROHIBITED.
11 HAND CART PROHIBITED.
12 CYCLE PROHIBITED.
13 PEDESTRIAN PROHIBITED.
14 RIGHT TURN PROHIBITED.
15 LEFT TURN PROHIBITED.
16 'U' TURN PROHIBITED.
17 OVERTAKING PROHIBITED.
18 HORN PROHIBITED.
19 NO PARKING
20 NO STOPPING OR STANDING
21 SPEED LIMIT
22 WIDTH LIMIT
23 HIEGHT LIMIT
24 LENGTH LIMIT
25 LOAD LIMIT
26 AXLE LOAD LIMIT
27 RESTRICTION END
28 COMPULSORY TURN LEFT
29 COMPULSORY TURN RIGHT
30 COMPULSORY AHEAD ONLY
31 COMPULSORY TURN LEFT AHEAD
32 COMPULSORY TURN RIGHT AHEAD
33 COMPULSORY MOVE AHEAD (OR) TURN LEFT
34 COMPULSORY MOVE AHEAD (OR) TURN RIGHT
35 COMPULSORY KEEP LEFT
36 COMPULSORY CYCLE TRACK
37 COMPULSORY: SOUND HORN

DV20N1438H3

© NIMI NOT TO BE REPUBLISHED

Fig 4

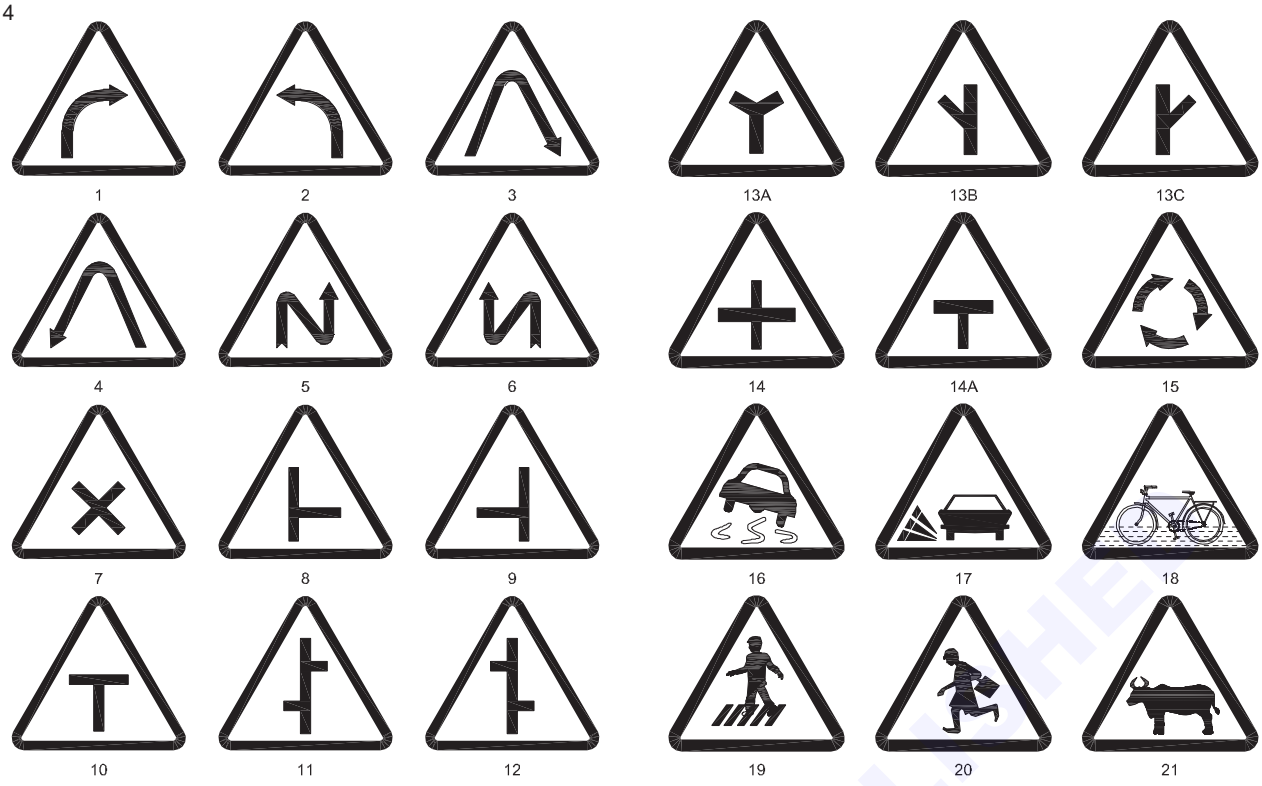

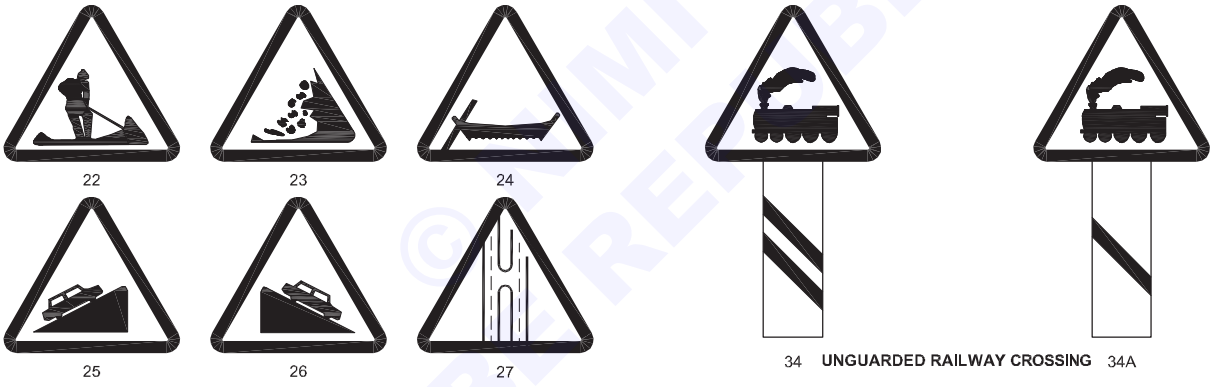

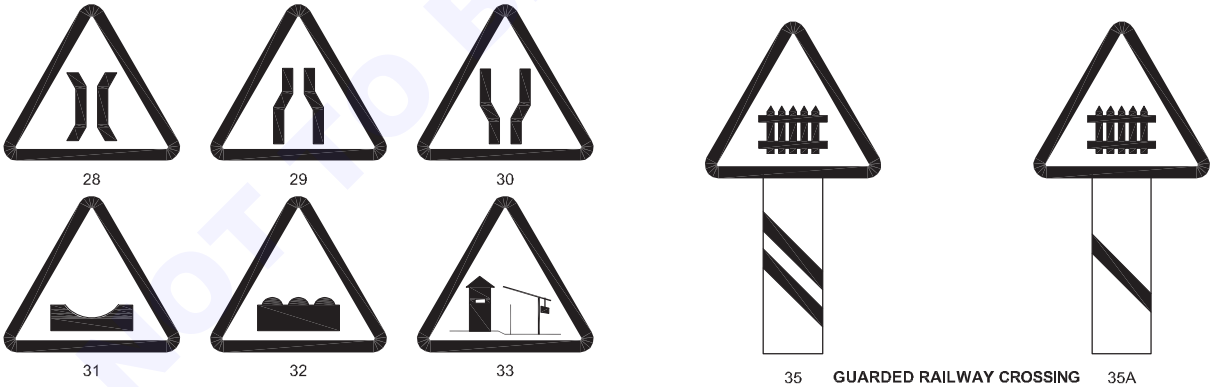

WARNING SIGNS (NEW-PROPOSED)

WARNING SIGNS (NEW)

1. RIGHT HAND CURVE
2. LEFT HAND CURVE
3. HAIRPIN BEND RIGHT
4. HAIRPIN BEND LEFT
5. REVERSE BEND RIGHT
6. REVERSE BEND LEFT
7. CROSS ROAD
8. SIDE ROAD RIGHT
9. SIDE ROAD LEFT
10. T INTERSECTION
11. STAGGERED
12. INTERSECTIONS
13A. 'Y' INTERSECTIONS BOTH SIDES
13B. 'Y' INTERSECTIONS LEFT SIDES
13C. 'Y' INTERSECTIONS BOTH SIDES
14. MAJOR ROAD
14A. AHEAD
15. ROUND ABOUT
16. SLIPPERY ROAD
17. LOOSE GRAVEL
18. CYCLE CROSSING
19. PEDESTRIAN CROSSING
20. SCHOOL
21. CATTLE
22. MEN AT WORK
23. FALLING ROCKS
24. FERRY
25. STEEP ASCENT
26. STEEP DESCENT
27. GAP IN MEDIAN
28. NARROW BRIDGE
28. NARROW ROAD AHEAD
29. ROAD WIDENS AHEAD
30. DANGEROUS DIP
31. ROUGH ROAD
32. BARRIER AHEAD
33. UNGUARDED RAILWAY
34A. CROSSING
34. GUARDED RAILWAY
35A. CROSSING

DV20N1438H4

© NIMI NOT TO BE REPUBLISHED

4 Check the vehicle records are live.

5 Start the vehicle and move your vehicle by showing move signal.

6 Keep your vehicle drive to your left side road lane.

7 Let allow the other vehicle to overtake from the right side road lane.

8 Stay your vehicle left when you turn vehicle to left direction.

9 Keep enough distance from the left most lane and ensure there enough distance for oncoming vehicle to pass.

10 Come to the center of road before you start turning right but when going around curb try to stay towards the left most part of your lane to avoid contact with oncoming vehicle.

11 Always overtake from the right side.

12 When being overtaken by another vehicle never increase your vehicle speed to prevent the other driver from overtaking you.

13 Be extra alert on intersection road crossing through them, ensure your vehicle does not cause of inconvenience to other road users.

14 Give a way to emergency service vehicles such as ambulance and fire engine.

15 While drive your vehicle on the road let allow pedestrian to crossing away at pedestrian crossing.

16 Your vehicle `U' turn drive can only be taken when there is no warning sign near by you give a proper indicator to other vehicle drivers that you are going to take a `U' turn.

17 Always use indicators to let other road users know about your vehicle change in the direction of travel if your vehicle indicator not work, you can use your hand signal.

18 Don't park your vehicle on the way it causes disturbance to other road users.

19 Your vehicle registration plate should be visible of all times in front and rear side of the vehicle.

20 Only use the permissible one way road.

21 Never park your vehicle in reversion on a one way street.

22 Always stop your vehicle behind the stop lines.

23 No vehicle should be towed closer to other vehicle on the road.

24 Drivers should not horn needlessly, near school, hospital zones.

25 Traffic lights and signs should be always obeyed.

26 Always keep safe distance from the vehicle in front of you as this will give you enough time to come to stop in case the vehicle in front brakes suddenly apply.

27 Right of way on steep roads.

28 You should always have a clear view of the road ahead.

29 When driving your vehicle in reverse, you should make sure you do not cause annoyance to any other people on the road.

30 If you are crossing your vehicle in any crossing road, stop, look and go as per electrical signals, provided on the road crossing. (Fig 5)

Fig 5

E CROSSING ELECTRICAL SIGNALS

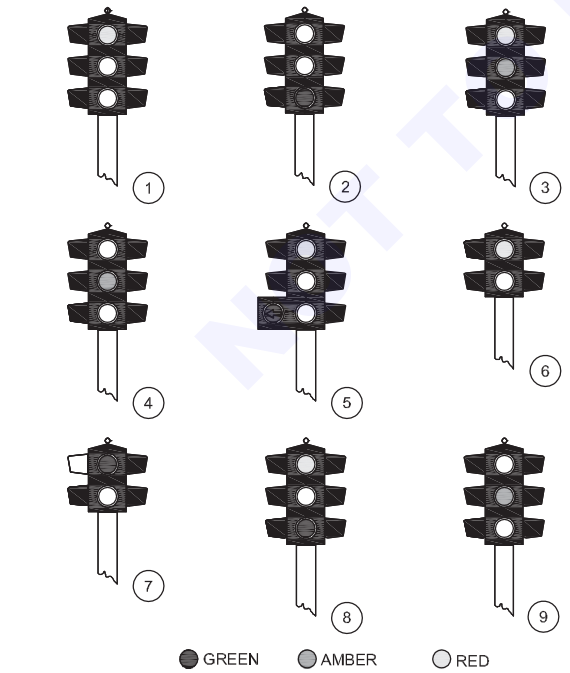

1 RED LIGHT -
'STOP AND WAIT BRHIND THE STOP LINE'.

2 GREEN LIGHT -
'GO' IT ROAD IS CLEAR.

3 ORANGE WITH OR AFTER RED -
'ALERT AND START MOVING IT ROAD IS CLEAR'.

4 ORANDE WITH GREEN
'STOP' AT SHOP LINE.

5 GREEN WITH ARROW TO THE LEFT
'MOVE TO THE LEFT'.

6 PEDESTRIANS NOT TO CROSS.

7 PEDESTRIANS - CROSS NOW.

8 FLASHING RED LIGHT - STOP AT STOP LINE AND PROCEED IF WAY IS CLEAR.

9 FLASHING ORANGE - PROCEED WITH CAUTION.

10 GREEN LIGHT WITH ARROW AND RIGHT AND STRAIGHT -
'MOVE STRAIGHT OR RIGHT AS YOU LIKE'.

11 GREEN LIGHT WITH MAN ON PEDESTRIAN LINE -
'PEDESTRIANS TO CROSS THE ROAD ON THIS LINE'.

DV20N1438H5

© NIMI NOT TO BE REPUBLISHED

31 Pay attention listen to warnings sound of vehicle come behind or side of your vehicle.

32 Never remove your hands from steering wheel while drive your vehicle on any type of road.

33 Being safe when getting in and out of vehicle.

34 Never open your vehicle door suddenly as there might be a vehicle coming from behind and sudden opening of door might cause the vehicle to collide with it.

Road safety rules	Figs
Always wear a seat belt	
Road distractions	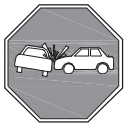
Never drink and drive	
Always follow/obey speed limit	
Never jump a traffic signal	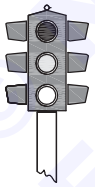
Maintain your car periodically.	

35 Never park your vehicle in following places.

- Near road crossing, a bend, top of hill, on the bridge.
- On the foot path.
- Fast traffic road.
- Near traffic light or pedestrian crossing.
- Opposite of another parked vehicle.
- Alongside another parked vehicle.
- Continuous white line with or without a broken line.
- Blocking a traffic sign, near school/hospital entrance.
- On the wrong side of the road.
- Where parking is prohibited.
- Away from the edge of the foot path

36 While drive your vehicle on any type of road follow the traffic police hand signals, (where electric signal light is not available) (Fig 6)

C Traffic policeman's hand signals.

Fig 6

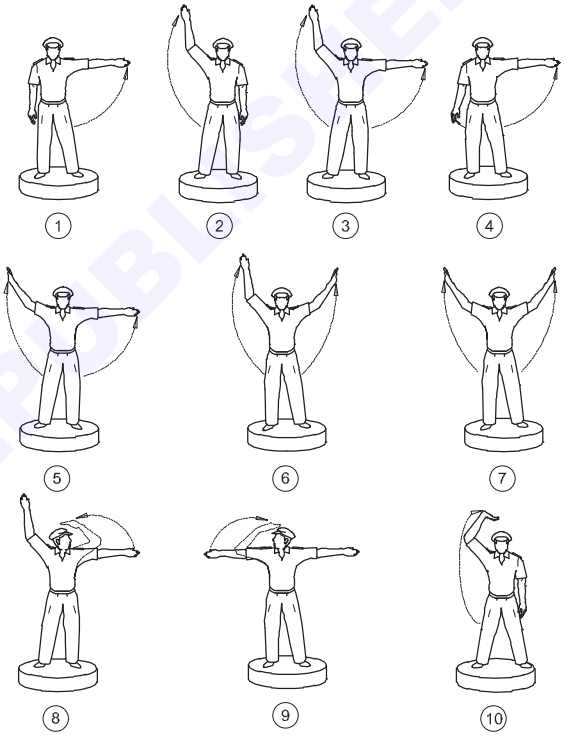

POLICE SIGNALS

1 STOPPING VEHICLE COMING FROM BEHIND.
2 STOPPING VEHICLE COMING FROM FRONT.
3 STOPPING VEHICLE COMING FROM FRONT AND BEHIND.
4 STOPPING VEHICLE WANTING TO TURN RIGHT.
5 STOPPING VEHICLE COMING FROM RIGHT.
6 ALLOWING TRAFFIC FROM RIGHT AND TURNING RIGHT BY STOPPING TRAFFIC FROM LEFT.
7 CLOSING ALL TRAFFIC.
8 ALLOWING VEHICLES COMING FROM LEFT.
9 ALLOWING VEHICLES COMING FROM RIGHT.
10 ALLOWING VEHICLES COMING FROM FRONT.

DV20N1438H6

©NIMI NOT TO BE REPUBLISHED

Practice to use the hand signal of a driver

Objectives: At the end of this exercise you shall be able to
- **use the hand signals on driving a vehicle on the road.**

Requirements

Tools/Instruments

• Trainee's tool kit	- 1 No.
• Driver hand signal chart	- 1 No.
• Vehicle emergency kit	- 1 Set.
• Vehicle document	- 1 Set.
• License	- 1 No.
• `L' board	- 2 Nos.

Equipment/Machines

• Vehicle (LMV)	- 1 No.

Materials/Components

• Cotton waste	- as reqd
• Soap oil	- as reqd
• Coolant oil	- as reqd
• Lube oil	- as reqd
• Brake fluid	- as reqd

PROCEDURE

Using a hand signal of a driver.

1 Select the vehicle for driving practice.

2 Prepare the vehicle for driving practice.

3 If need top-up engine oil, coolant and steering gear box oil, master cylinder fluid etc.

4 Study the driver hand signal chart figures.

Note: Instructor should be show demo on vehicle to use the drivers hand signal while drive a vehicle on the road.

5 Start the vehicle let it allow to warm up the engine.

6 Check the dash board gauges and warning lights.

7 Check the engine running performance.

8 Ensure engine is running in perfect condition.

9 Engage the 1st gear by pressing clutch pedal and release the parking brake.

10 Move the vehicle by releasing clutch pedal and simultaneously gradually press the accelerator pedal for vehicle smooth move.

11 Drive slowly towards highway road.

12 Pick up the left slow drive road lane.

13 Drive the vehicle slowly.

14 Practice show the hand signal intend to move your vehicle in to left or turn your vehicle towards left direction as shown Fig 1 rotate the hand in the anticlockwise direction.

15 Drive your vehicle intend to move out to the right or changing the road lane or right turn your vehicle by showing hand signal as Fig 2. Extend the arm straight out with the palm facing front.

Fig 1

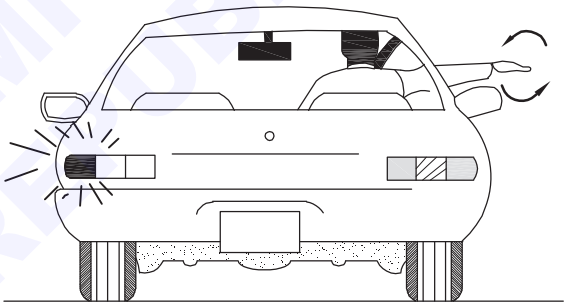

LEFT TURN HAND SIGNAL

DV20N1439H1

Fig 2

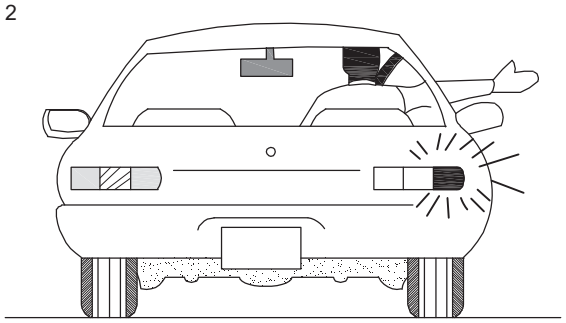

RIGHT TURN HAND SIGNAL

DV20N1439H2

16 For stop your vehicle show your hand as shown in Fig 3 extend your right arm straight up out with palm facing front.

17 For slow down your vehicle show your hand as shown in Fig 4 extending your arm downward with your palm facing backward.

18 For allowing the following vehicle to overtake your vehicle show your hand signal as shown in Fig 5 Extending your right arm to out and move the arm forward and reverse action slowly your hand palm should be facing-front.

© NIMI NOT TO BE REPUBLISHED

Fig 3

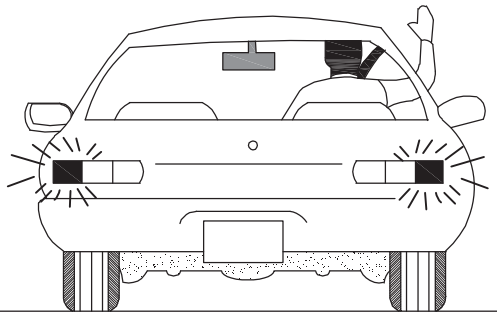

STOP HAND SIGNAL

DV20N1439H3

Fig 4

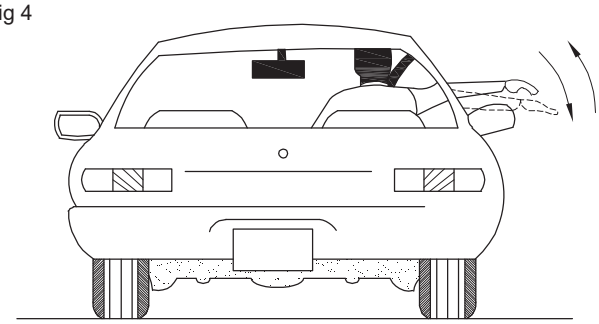

SLOW DOWN HAND SIGNAL

DV20N1439H4

Fig 5

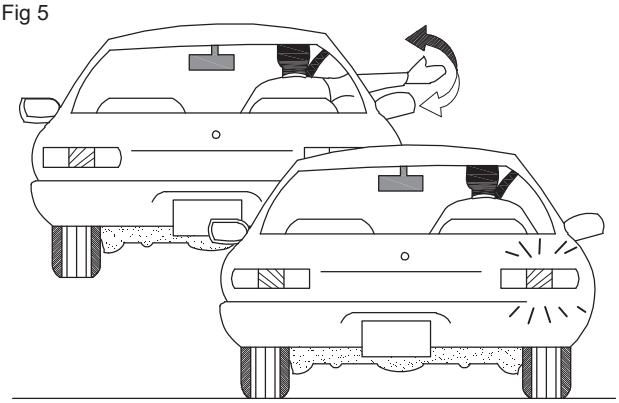

HAND SIGNAL FOR ALLOW THE CAR FOLLOWING YOU TO OVERTAKE

DV20N1439H5

19 Drive your vehicle on the highway and do different type of hand signal practice for improve your driving skill.

20 After driving practice drive the vehicle to shed.

21 Park the vehicle in parking space and switch off the engine.

22 Apply parking brake.

23 Draw the driver hand signal in your note book.

© NIMI NOT TO BE REPUBLISHED

Perform driving test at concern RTO

Objectives: At the end of this exercise you shall be able to
- **perform driving test at concern RTO.**

Requirements

Tools/Instruments

- Vehicle tool kit - 1 No.
- First aid kit - 1 No.
- Road sign chart - 1 No.
- L.L.R Certificate - 1 No.

Equipment/Machines

- Vehicle - 1 No.

Materials/Components

- Cotton waste - as reqd
- Soap oil - as reqd

PROCEDURE

TASK 1: **Perform driving activity at concerned RTO driving test**

Note: Driving licence test is essential to receive a new driving licence in India. Valid licence holder only allow to ride a vehicle on public road as per motor vehicle act 1988, 1989.

1 The applicant must under go for driving practice at a government authorized motor driving school.

2 The applicant must be practiced to improve following driving skill
   - Vehicle starting and stopping
   - Vehicle parking in different positions
   - Vehicle drive on different conditions of roads

3 Ability track change the vehicle in 4,6,8 lane highways.

4 Ability to parallel park the vehicle in narrow place

5 Ability to drive forward on '8' shaped track

6 Ability to drive up a gradient without moving any backward.

7 Ability to drive backward on 'S' shaped track.

TASK 2: **Things to keep in mind when appearing for test at concern RTO**

1 Keep your valid learners licence and other relevant documents with you.

2 Reach before one hour to your RTO relevant time for driving test.

3 Do get the test slot booking slip if you booked the appointment online registration.

4 Make sure you are familiar with road signs, signals and traffic rules and regulation remembers before attain the driving test

5 Keep your vehicle ready for driving test which is related to your application.

6 Keep the vehicle records like vehicle registration certificate pollution certificate, vehicle fitness certificate, etc.

7 incase you are appearing for the test for a licence for drive a transport vehicle, you should also need to submit a form cmv-5 issued by authorized driving school.

8 RTO fees paid slip.

9 The RTO check the above documents before move for driving test

10 The driving test will be conducted by the competent authority

11 The competent will be check the following while you are involved with driving test
   - Vehicle starting and stopping
   - Vehicle moving and straight driving, braking
   - Turning a road corners, changing road lanes
   - Gear shifting, hand signals, road signs, traffic light signals and your concentration
   - Vehicle reversing and parking
   - The competence will ask the questions related driving and traffic rules and regulations

12 On completion of driving test, examiner will declare the result

13 After passing driving test driving licence will be issued within a weak by RTO

14 The licence will be send to the applicant by post for his present address. (Fig 1)

© NIMI NOT TO BE REPUBLISHED

Fig 1

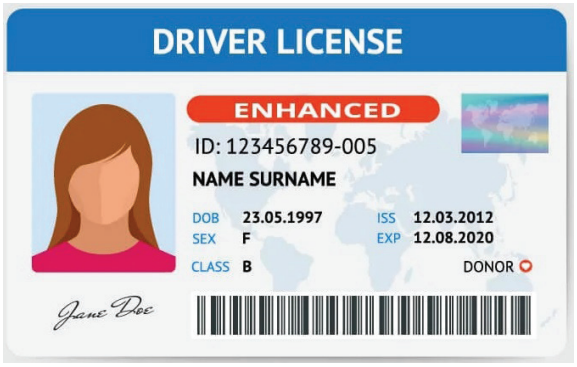

© NIMI
NOT TO BE REPUBLISHED

Practice to identify the different types of vehicle and engine components

Objectives: At the end of this exercise you shall be able to
- **identify the different type of vehicle**
- **identify the diesel and petrol engine parts.**

Requirements

Tools/Instruments

- Trainee's tool kit - 1 No.
- Vehicle chart - 1 No.
- Engine chart - 1 No.

Equipment/Machines

- Different types of vehicle - 1 No each
- Petrol and diesel engine - 1 No each

Materials/Components

- Cotton waste - as reqd
- Soap oil - as reqd

PROCEDURE

TASK 1: **Identify the different type of vehicle as shown in (Fig 1)**

Fig 1

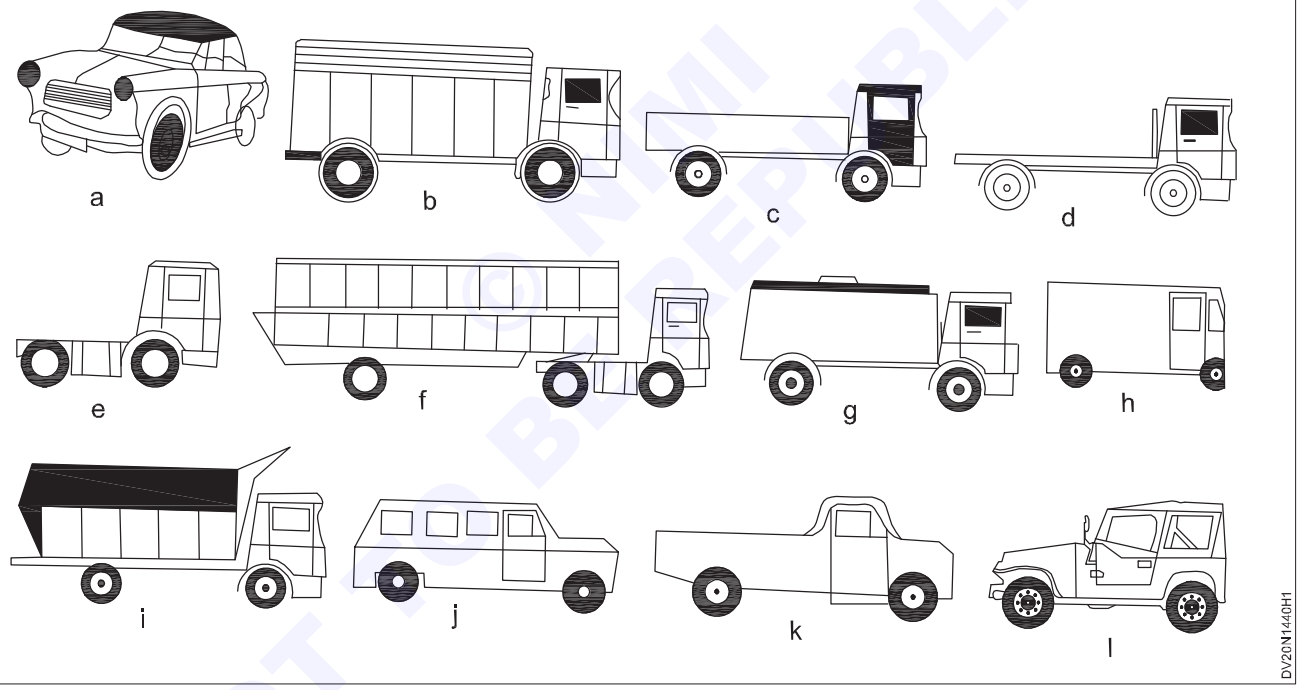

a Car
b Truck punjab body or straight truck
c Truck Half body
d Truck flat form type
e Tractor
f Tractor with articulated trailer
g Tanker
h Delivery van
i Dumper truck
j Station wagon
k Pick up
l Jeep

1 Write the name of the vehicle in Table 1 with respect to (Fig 1).

Table 1

Sl No.	Match a letter	Vehicle Name
1	a	
2	c	
3	f	
4	g	
5	h	
6	j	
7	k	
8	l	

© NIMI NOT TO BE REPUBLISHED

Sl No.	Match a letter	Vehicle Name
9	i	
10	b	
11	d	
12	e	

TASK 2: **Identify the parts of diesel engine**

1 Place the cut-sectional model diesel engine on the work bench

2 Trace the radiator, FIP, Injector, air cleaner, fuel feed pump, fuel feed, alternator, self-starter, water pump, dipstick, inlet & Exhaust manifold, engine head & valve assembly, rocker arm, valve cover, piston, timing gear oil pump, fly wheel & housing, connecting rod, crack-shaft and etc.

3 Identify the parts in the diesel engine-cut-section model shown in Fig 1, Fig 2 and Fig 3.

4 Write the name of the parts in the Table-1

Fig 1

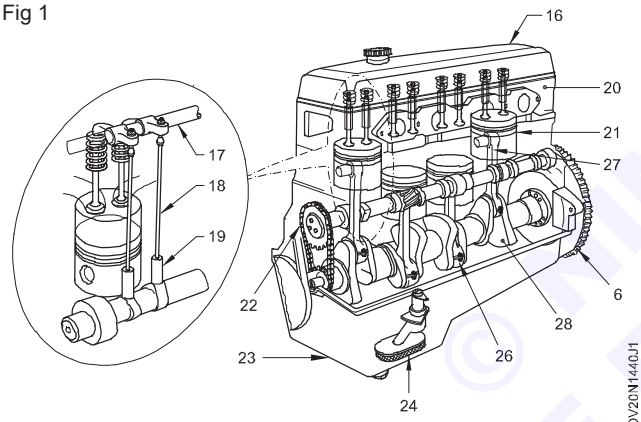

Fig 2

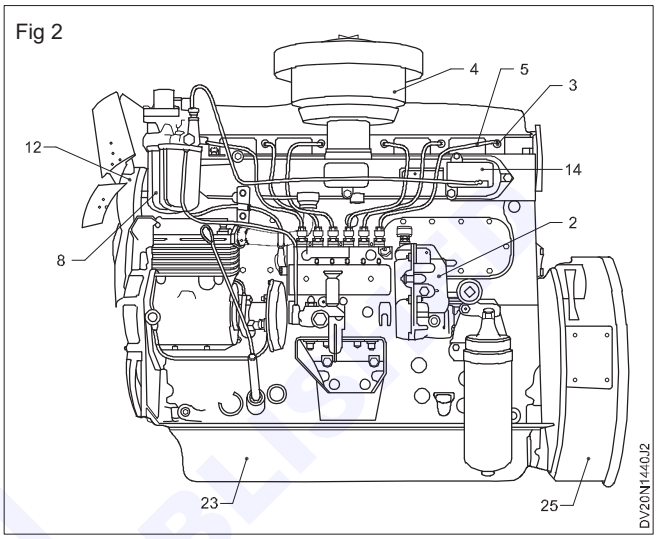

Fig 3

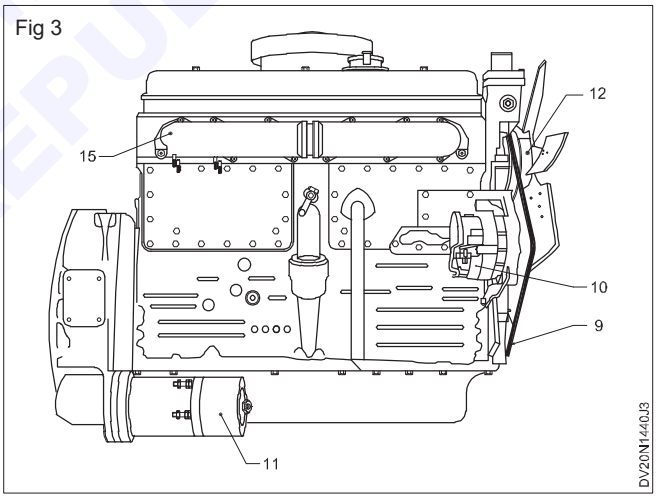

Table –1

S. No.	Label No	Name of the part
1		
2		
3		
4		

TASK 3: **Identify the petrol engine parts**

1 Locate the radiator (1) (Fig 1)

2 Locate the distributor (2) and ignition coil (3) (Fig 1).

3 Locate the air cleaner (4) (Fig 1)

4 Locate the fuel pipes (5) (Fig 1)

5 Locate the fly wheel (6) (Fig 3)

6 Locate the fuel pump (7) (Fig 3)

7 Locate the carburetor (8) (Fig 3)

8 Locate the fan belt (9) (Fig 3)

9 Locate the dynamo (10) (Fig 2)

10 Locate the self-starter (11) (Fig 2)

11 Locate the water pump assembly (12) (Fig 3)

12 Locate the spark plugs (13) (Fig 2)

13 Locate the inlet (14) (Fig 1) and exhaust manifold (15) (Fig 2)

14 Locate the valve cover (16) (Fig 4)

15 Locate the rocker assembly (17) and the cylinder head (20) (Fig 4)

16 Locate the push rods (18) (Fig 4)

17 Locate the tappet side covers on the engine block.

18 Locate the tappets (19) (Fig 4)

© NIMI NOT TO BE REPUBLISHED

19 Locate the cylinder head (20)

20 Locate the crank shaft pulley (21) (Fig 3)

21 Locate the timing cover in front of the engine.

22 Locate the timing gear and chain (22) (Fig 4) Note down the timing marks.

23 Locate the camshaft (29) (Fig 4)

24 Locate the oil sump (23) (Fig 3)

25 Locate the oil pump (24) (Fig 4)

26 Locate the oil filter (25) (Fig 1)

27 Locate the connecting rod caps (26) (Fig 4)

28 Locate the piston and connecting rod in the engine (27) (Fig 4)

29 Write any 10 engine parts name and their function in table-1

Fig 1

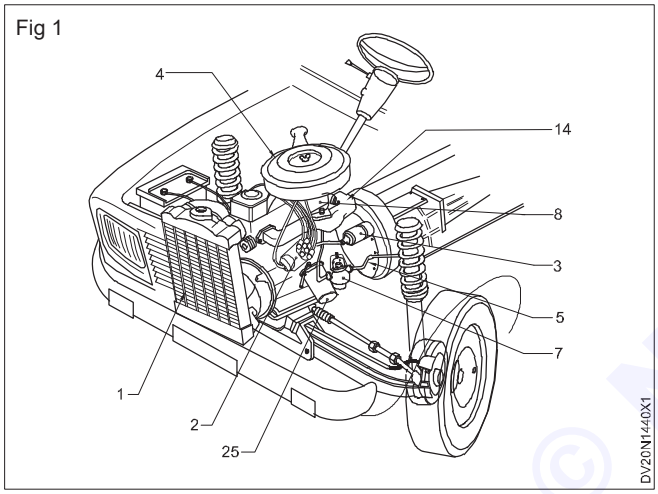

Fig 2

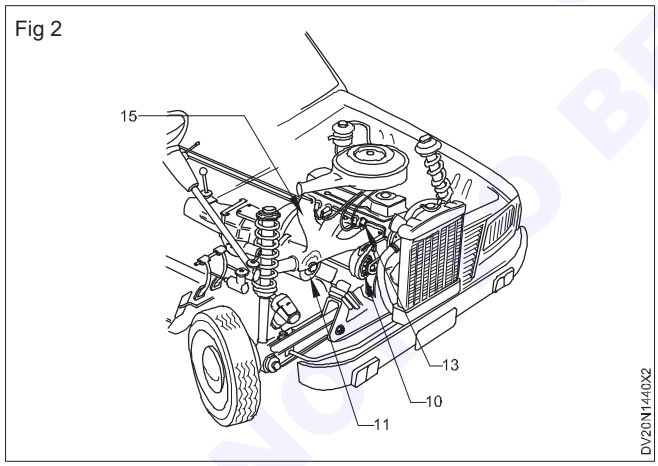

Fig 3

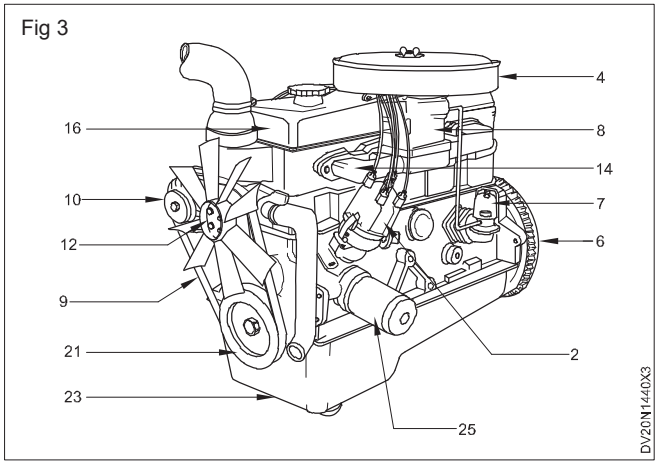

Fig 4

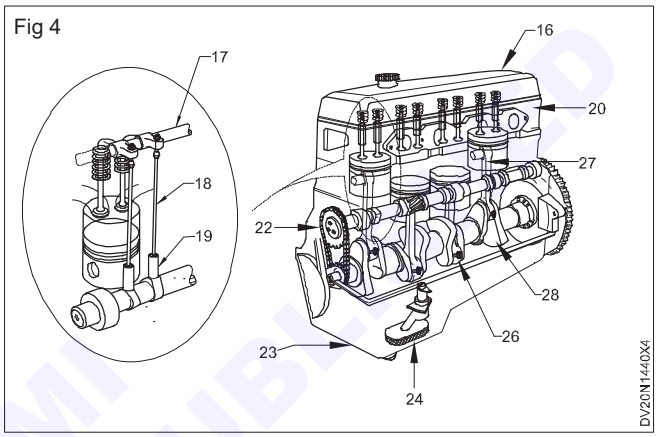

Table 1

S. No.	Engine parts name	Function of parts	Label No.
1			
2			
3			
4			
5			
6			
7			
8			
9			
10			

© NIMI NOT TO BE REPUBLISHED

Practice to check oil and water level in vehicle systems

Objectives: At the end of this exercise you shall be able to
- **check the oil and water level of engine and radiator**
- **check the oil level of transmission system and steering system**
- **check the electrolyte of battery.**

Requirements

Tools/Instruments

• Trainee's tool kit	- 1 No.
• Hydrometer	- 1 No.
• Vehicle owners manual	- 1 No.

Equipment/Machines

• Vehicle (LMV)	- 1 No.

Materials/Components

• Cotton waste	- as reqd
• Soap oil	- as reqd
• Engine oil	- as reqd
• Gear oil	- as reqd
• Brake fluid	- as reqd
• Coolant	- as reqd

PROCEDURE

TASK 1: **Check the oil and water level of the engine**

1 Park the vehicle on the shop floor.

2 Apply hand brake and wooden chocks to the wheels (Fig 1)

Fig 1

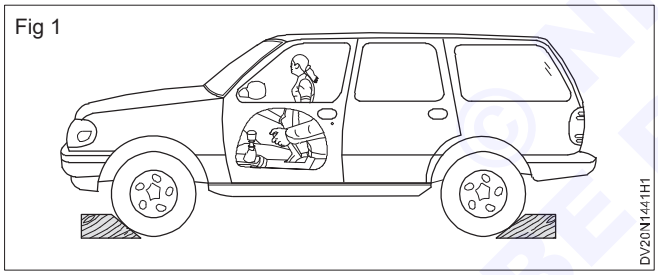

3 Refer the owner manual for oil and water quantity and level.

4 Open the bonnet cover and hold it in open position.

5 Remove the radiator cap and check the water level, if need top-up, up to level as specified by the vehicle manufacturers.

6 Remove the engine oil dip stick and check the oil level mark if oil level is low top-up with quality graded engine oil up to level.

7 Open the wind screen wiper water container cap

8 Check the water level if need top-up with clean water.

— — — — — —

TASK 2: **Check the transmission oil level and steering hydraulic oil**

1 Check the gear box oil level, if oil level is low top-up with SAE-90 grade oil.

2 Check differential oil level, if need top-up with SAE-90 grade oil.

3 Check the transfer case oil of 4x4 vehicle if need top-up oil to maintain oil in transfer case.

4 Check the master cylinder oil level, if need to up with hydraulic oil.

— — — — — —

TASK 3: **Check the battery electrolyte specific gravity**

1 Disconnect the negative cable first and then positive cable from the battery terminal.

2 Remove the mounting clamp nuts.

3 Lift the battery from the vehicle.

4 Clean the top of the battery with water and cotton cloth.

5 Clean the battery terminals by a non-metallic wire brush or emery paper.

6 Open the vent plugs and check the electrolyte level of each battery cell.

7 If need top-up with distilled water.

8 Ensure battery cell electrolyte is filled up to level marked by the manufacturers. (Fig 1)

NOT TO BE REPUBLISHED © NIMI

Fig 1

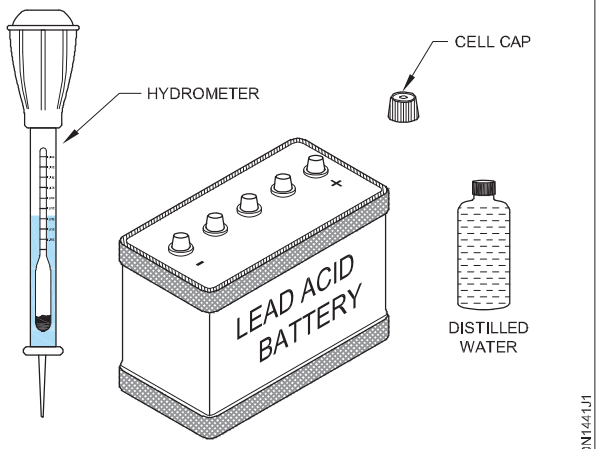

© NIMI NOT TO BE REPUBLISHED

Practice to replace air cleaner, filter, fuel filter and Engine oil filter

Objectives: At the end of this exercise you shall be able to
- **replace the air cleaner filter**
- **dismantle and replace the fuel filter**
- **bleeding**
- **replace the oil filter.**

Requirements

Tools/Instruments

• Trainee's tool kit	- 1 No.
• User manual	- 1 No.

Equipment/Machines

• Vehicle (LMV)	- 1 No.

Materials/Components

• Air cleaner filter	- as reqd
• Engine oil filter	- as reqd
• Fuel filter	- as reqd
• Engine oil	- as reqd
• Soap oil	- as reqd
• Cotton waste	- as reqd
• Kerosene	- as reqd

PROCEDURE

TASK 1: **Replace the air cleaner filter**

The instructor has to demonstrate the method of replace their cleaner in a vehicle.

1 Vehicle air cleaner air filter pulls pollutants like dusk pollen dirt, mold, animal fur, bacteria and more.

2 The dust germs and grime will clog the filter, so that air cleaner filter need to replace every 15000 to 30000 miles.

3 Normal driving vehicle air filter changing in every 20000 miles

4 Start the engine and follow the method to find your car air filter may be dirty and need to replace as following indications.
- Poor acceleration of the engine
- Poor engine performance
- Different and strange noises
- Dash board check engine light glow
- Tail pipe more smoke
- Poor mileage
- More fuel consumption

5 If you find above type of defects, stop the engine and open the air cleaner top cover and remove the air filter.

6 Clean the air cleaner inside body. (Fig 1)

Fig 1

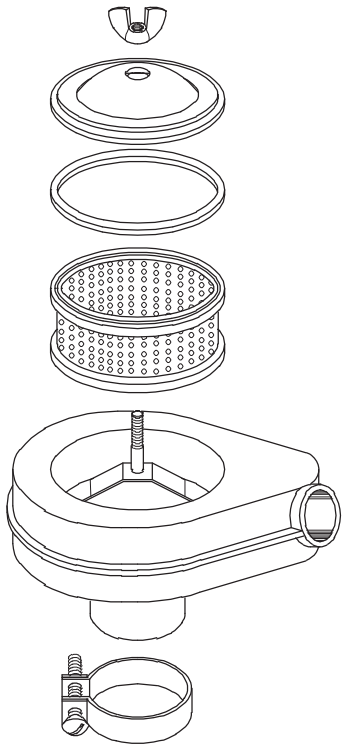

7 Select the new filter and fit inside the air cleaner.

8 Fix the top cover of air cleaner and start the engine for check the engine performance.

9 Ensure the engine performance is as specified limit of vehicle manufacturer.

— — — — — —

© NIMI NOT TO BE REPUBLISHED

TASK 2: **Dismantle and replace the fuel filter**

1 Disconnect fuel lines from the filter.

2 Drain fuel, dirt and water from the filter housing by opening the drain plug (1) (Fig 1).

Fig 1

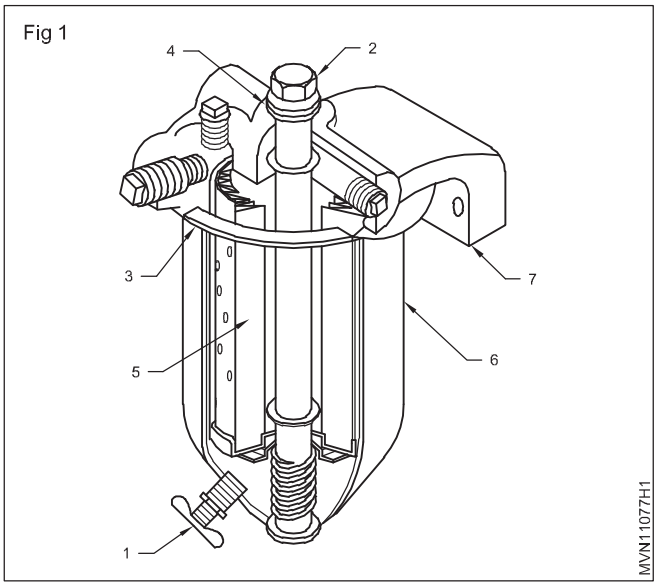

3 Loosen the centre stud bolt (2) located at the top of the assembly.

4 Remove the top cover (7)

5 Remove the used elements (5) from the filter housing (6). Discard the element.

6 Wipe the inside of the filter housing.

7 Clean fuel residue and other deposits. Use kerosene/ diesel for cleaning the housing.

8 Place a new gasket (4) on the centre stud bolt.

9 Place a new gasket (3) in the filter cover assembly.

10 Place a new fuel filter element in the filter housing.

11 Fit drain plug in the filter housing

12 Fill diesel fuel in filter housing (6)

13 Assemble the housing with cover and tighten the centre bolt.

14 Connect the fuel hoses with fuel filter

— — — — — —

TASK 3: **Bleeding**

1 Check all fuel line connection joints and leakages in fuel lines before start bleeding

2 Operate the hand priming pump till fuel/pressure built up.

3 Loosen the fuel filter bleeding screw by one to two turns so that air can escape through the hole in the bleeding screw (Fig 1).

4 Tighten the bleeding screw (1) again.

5 Repeat the operation till the air in the system is fully drawn out in both filter

7 Loosen the bleeding screw (1) at F.I.P. (5) by one or two turns so that air can escape through the hole from the bleeding screw.

8 Tighten the bleeding screw (1) again.

9 Repeat the operation till the air in the system is fully drawn out.

10 Ensure all fuel connections and bleeding screws are securely tighten

11 Start the engine and check to performance.

Fig 1

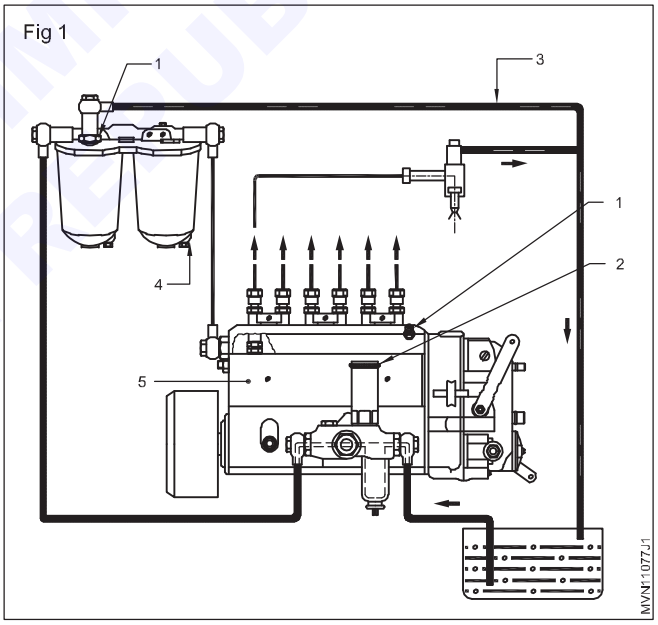

— — — — — —

TASK 4: **Replace the oil filter**

1 Start the engine and warm up till the operating temperature is achieved.

2 Stop the engine.

3 Unscrew the engine oil dipstick.

4 Check the level and condition of the oil (using a dip stick).

5 If engine oil colour changed into brown or black, sludge or contaminated change engine oil and filter.

6 Unscrew the pan drain plug and drain oil completely.

7 Change the oil filter in the bowl (Fig 1). Ensure that the washer and spring are fitted in correct position.

8 Check the drain plug gasket washer and replace it, if found damaged.

© NIMI NOT TO BE REPUBLISHED

Fig 1

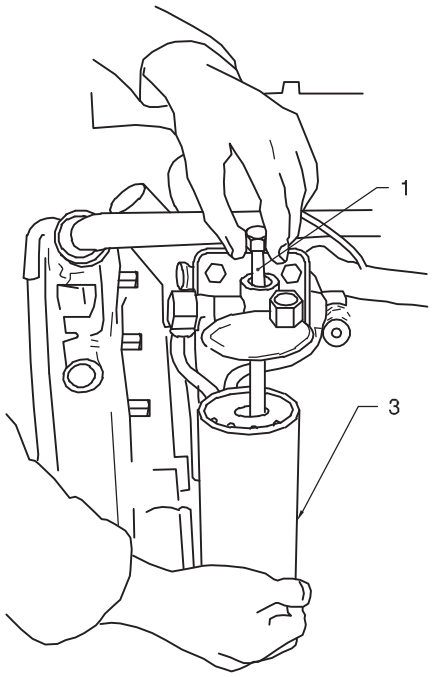

9 Refill the engine oil with the correct grade of oil as recommended by the manufacturer.

10 While refilling check the oil level by the dip stick till the oil level reaches the up to level mark.

11 Refit the oil filling cap.

12 Start the engine and warm up.

13 Check the oil leak through the drain plug and filter; if a leak is found rectify the leakage.

14 Stop the engine and check the oil level with the dip stick. If required Top - up oil till the oil level reaches the maximum mark on the dip stick.

15 Start the engine and observe the oil pressure at the idling speed of 600 to 700 r.p.m., 1000 r.p.m., 1500 r.p.m. and 2500 r.p.m. Observe the engine speed with the help of a tachometer and note down all the readings and compare them with the manufacturer's specifications.

© NIMI
NOT TO BE REPUBLISHED

Practice to apply grease on vehicle greasing points

Objectives: At the end of this exercise you shall be able to
- **identify the greasing points of the vehicle**
- **apply grease on greasing point.**

Requirements

Tools/Instruments

- Trainee's tool kit - 1 No.
- Grease gun - 1 No.

Equipment/Machines

- Vehicle (LMV) - 1 No.
- Air compressor - 1 No.

Materials/Components

- Grease - as reqd
- Lube oil - as reqd
- Cotton waste - as reqd
- Soap oil - as reqd
- Grease nipple - as reqd

PROCEDURE

TASK 1: **Identify the vehicle greasing points**

1 Select the vehicle for greasing.

2 Park the vehicle on vehicle servicing ramp (Fig 1)

Fig 1

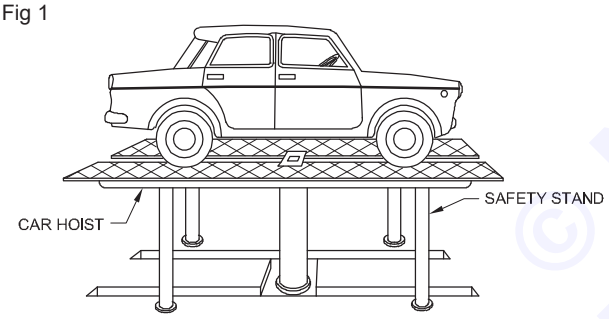

HYDRAULIC CAR HOIST

3 Apply kerosene on under chassis of the vehicle.

4 Let it allow for few hours for wet condition.

5 Wash the vehicle with high pressure water spray by using car washing machine.

6 Dry off the vehicle with compressed air spray.

7 Refer the vehicle user manual for identify the greasing points.

8 Identify the greasing nipple points fitted on the vehicle. (Fig 2)

Fig 2

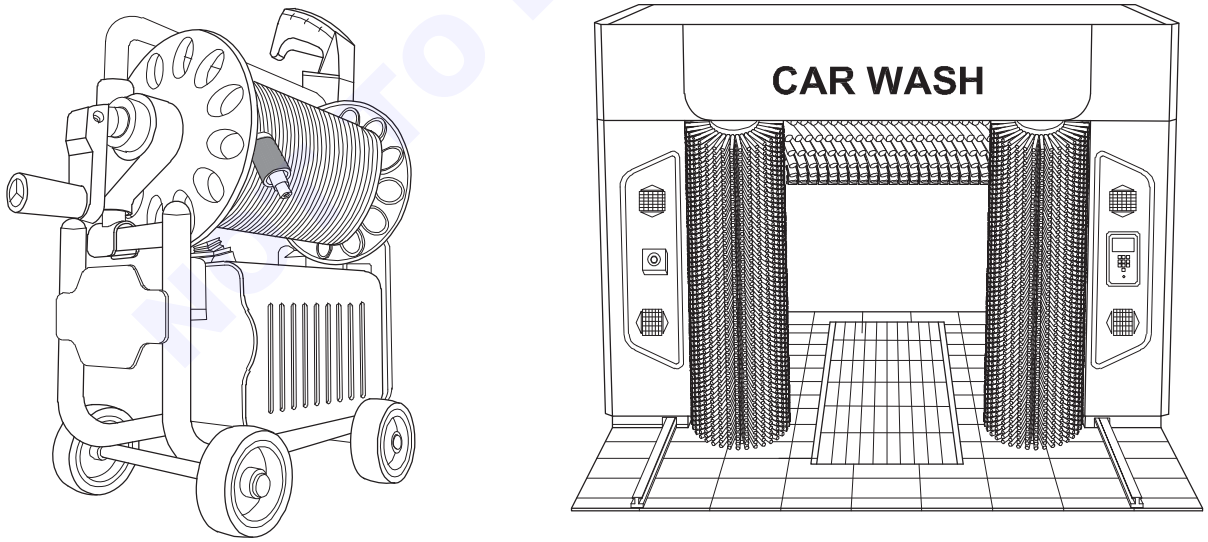

VEHICLE WASHER ISTOBAL

© NIMI NOT TO BE REPUBLISHED

TASK 2: **Apply grease to vehicle parts**

1 Clean the grease nipples fitted on the vehicle.
2 Inspect the grease nipples and replace the damaged nipples with new one.
3 Select the grease gun according to the vehicle (consult your instructor)
4 Prepare grease gun (hand grease gun and pressure grease gun) (Figs 1 & 2)

Fig 1

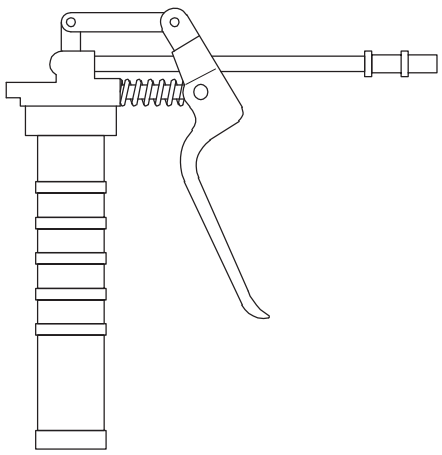

GREASE GUN

DV20N1443J1

5 Fill up the grease with specified grease in grease gun barrel.

Note:

- **Lubrication is essentially required in motor vehicle maintenance to reduce the friction and wearness between moving parts.**
- **Vehicle greasing must be done properly with right type of lubricants used**
- **Apply new grease on nipple till old grease come outs**
- **Improper greasing will cause serious trouble such as wornout the moving parts**

6 Connect the air line with pressure feed grease gun (Fig 2)
7 Test the grease gun for working, operate the grease gun lever till the grease comes out continuously from the nipple with pressure.
8 Put on the grease gun nipple point on grease nipple.

Fig 2

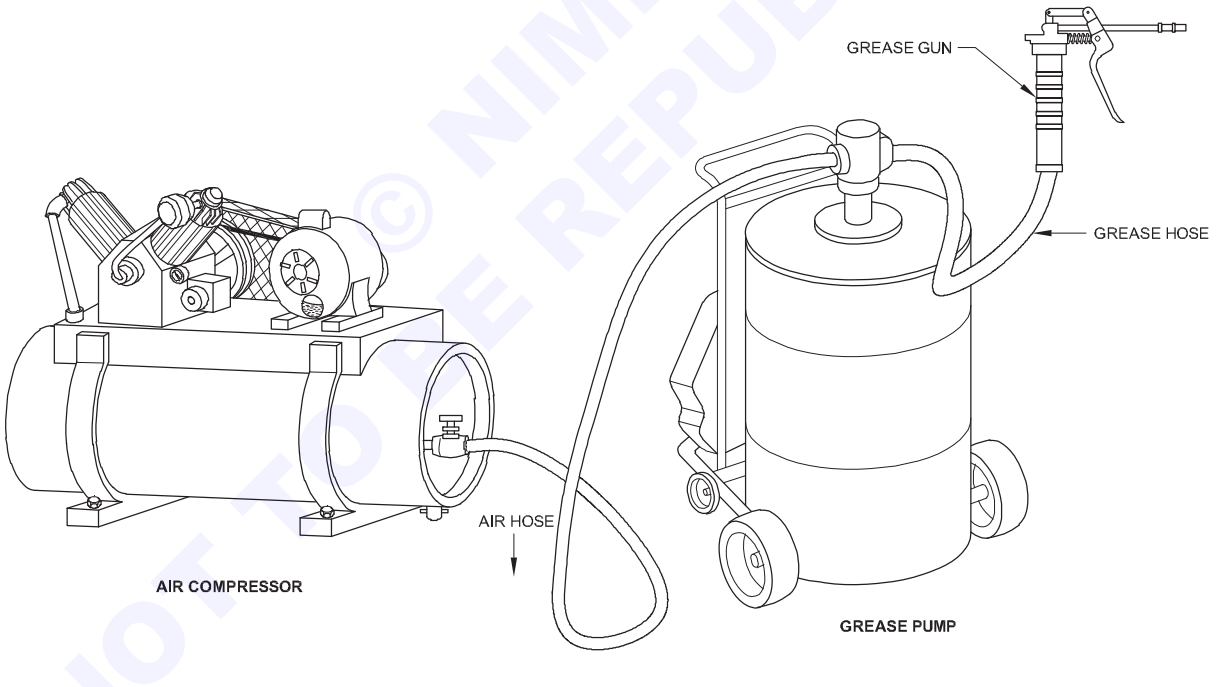

DV20N1443J2

9 Apply grease on steering linkage ball joints (Figs 2 & 3)
10 Apply grease in front wheel bearing (Figs 2 & 3)

Fig 3

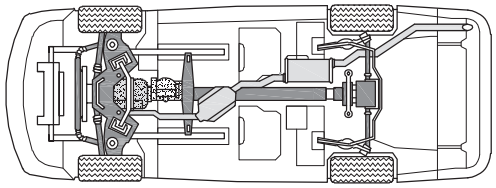

LIGHT VEHICLE

DV20N1443J3

11 Apply grease in torque shaft nipple (Figs 2 & 3)
12 Apply grease in front suspension ball joints (Figs 2 & 3)
13 Apply grease on rear wheel bearings.
14 Apply grease on brake and clutch pedal shaft linkages (Fig 2)
15 Apply grease on 'U' joint with slip spline (Figs 2 & 3)
16 Apply grease on spider bearing nipple. (Figs 2 & 3)
17 Apply grease on all moving part of the vehicle where a grease nipple is not provided (Fig 2)

© NIMI NOT TO BE REPUBLISHED

18 Ensure all grease nipples are greased.

19 Close the air hose connection and take out the grease gun.

Oil spray gun

1 Check visually the oil spray gun nozzle, nozzle holder, operating lever, as hose for any damage.

2 Fill the specified lubricant oil in the oil spray gun.

3 Connect the oil spray gun to the air hose connection.

4 Operate the oil spray gun.

5 See that the oil is sprayed at pressure.

6 Use the spray gun for oil spray purpose only.

7 Spray the oil under chassis of the vehicle for preventing rust from it.

8 Close the air hose connection and take out the oil spray gun.

9 Ensure your vehicle is properly greased and oil sprayed under chassis of the vehicle.

— — — — — —

© NIMI
NOT TO BE REPUBLISHED

Practice to change transmission oil of a vehicle

Objectives: At the end of this exercise you shall be able to
- **check the transmission oil condition in a vehicle**
- **replace the transmission oil of a vehicle.**

Requirements

Tools/Instruments

• Trainee's tool kit	- 1 No.
• User manual	- 1 No.

Equipment/Machines

• Vehicle (LMV)	- 1 No.

Materials/Components

• Cotton waste	- as reqd
• Soap oil	- as reqd
• Lube oil SAE-90	- as reqd
• Brake fluid	- as reqd

PROCEDURE

TASK 1: **Check the vehicle transmission oil**

1 Park the vehicle in the ramp to be oil change in transmission system.

2 Identify the gear box and differential unit (Fig 1)

Fig 1

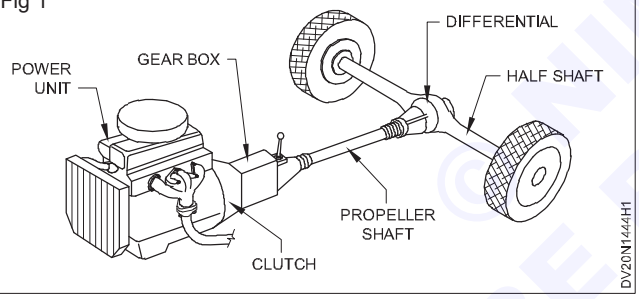

3 Identify the gear box oil drain plug.

4 Identify the differential unit oil drain plug.

5 Place the tray under the gear box and differential.

6 Remove the gear box and differential unit oil drain plug.

7 Slowly drain the old oil from the gear box and differential unit.

8 Remove the oil top-up plug.

9 Ensure, complete oil is drained from the gear box and differential unit.

10 Check the oil viscosity and oil condition by using oil viscosity test kit.

11 Drop a new specified gear oil from the top-up point of gear box until new oil is come out from the drain plug. (Fig 2)

Fig 2

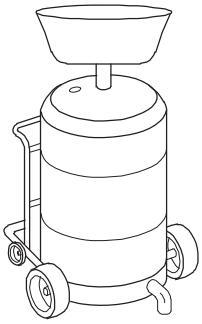

12 Drop the new gear oil (SAE-90) in different unit from top-up plug point, until new oil come out from the plug.

— — — — — —

TASK 2: **Fill the new oil in gear box and differential**

1 Ensure complete old oil is drained from the gear box and differential.

2 Fix the both drain plug and tighten it as specified torque recommended by the vehicle manufacturers.

3 Select the specified correct gear oil for top-up in gear box and differential unit.

4 Refer the vehicle owner's manual for correct quantity of oil.

5 Take the gear oil (SAE-90) and fill in gear box up to level marked.

6 Fix the gear box oil top-up plug.

7 Take the correct quantity oil for fill in differential.

8 Drop the oil in differential by using pistal oil gun (Fig 1)

9 Ensure oil filled up to level.

NOT TO BE REPUBLISHED ©NIMI

Fig 1

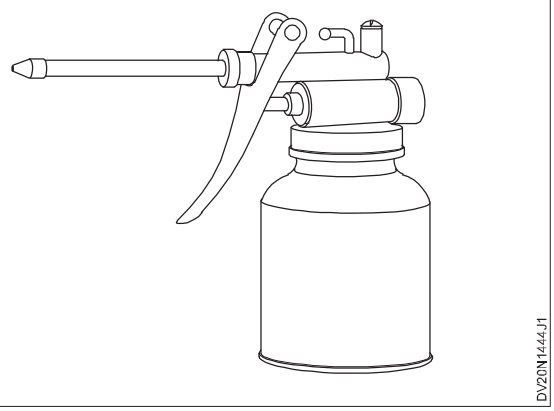

DV20N1444J1

10 Fix the oil top-up plug.

11 Ensure transmission oil is properly changed and top-up plug and drain plugs are properly tighten.

12 Ensure there is no oil leakage from gear box and differential unit.

Skill Sequence

Changing the transmission fluid and filter in the automatic transmission system

Objectives: This shall help you to
- **remove the oil fluid and filter**
- **change the new fluid and filter.**

Remove the old fluid from fluid coupling unit

1 Start the engine and get the engine as warm as required.

2 Stop the engine and check the level of oil in fluid coupling unit.

3 Use the jack to lift the vehicle or park the vehicle in the ramp. Also we can use the two post hoist to lift the vehicle.

4 Drain the old oil by loosening the drain plug.

5 Slowly drain the old oil.

6 Ensure complete old oil is drained.

Change the new fluid and filter

1 Fix the drain plug in it's place

2 Fix the oil sump with gaskets and ensure its sealing.

3 Measure the oil viscosity as recommended by the manufacture.

4 Pour the oil.

5 Measure using dip sticks.

6 Take the new filter

7 Fit it in its position.

8 Crank the engine observe it for the leakage.

9 Stop the engine.

10 Start and warm up for few minutes.

11 Again check the oil level. If satisfactory run the vehicle. (Fig 1)

Fig 1

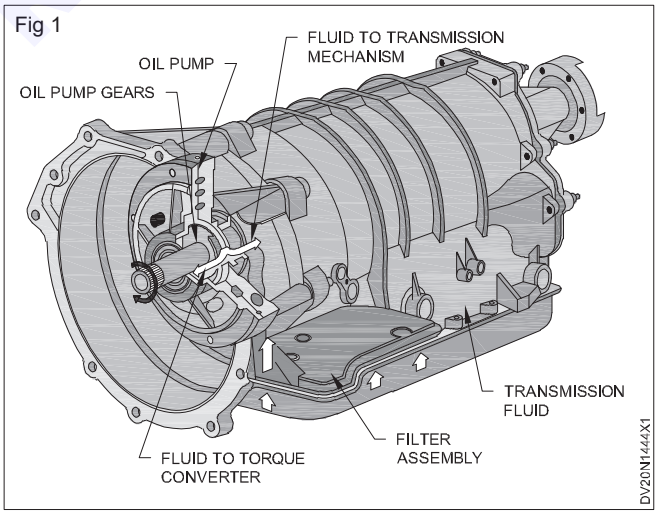

© NIMI NOT TO BE REPUBLISHED

Practice to check the master cylinder breathers and clutch pedal free play

Objectives: At the end of this exercise you shall be able to
- **check the clutch master cylinder breather**
- **check the clutch pedal free play.**

Requirements

Tools/Instruments
- Trainee's tool kit - 1 No.

Equipment/Machines
- Vehicle (LMV) - 1 No.

Materials/Components
- Cotton waste - as reqd
- Soap oil - as reqd
- Hydraulic fluid - as reqd

PROCEDURE

TASK 1: **Checking clutch master cylinder breather**

1 Park the vehicle on the shop floor.

2 Apply parking brake.

3 Identify the location of clutch master cylinder.

4 Press the clutch pedal to engage the gear.

5 If you feel that clutch pedal is hard or clutch plate is not disengaged (released) then check the master cap breathing hole and fluid level in clutch cylinder.

6 Release the clutch pedal and cheek the clutch master cylinder.

7 Remove the clutch master cylinder cap and check the breathing hole provided in that cap (cover).

8 If clutch master cylinder breathing hole is blocked, clean the hole.

9 Check the clutch master cylinder fluid level, if need top-up the fluid upto recommended fluid level.

10 Fix the cap and tighten it.

11 Bleed the clutch master cylinder and ensure the atmosphere air flow into the clutch master cylinder through cap. (Fig 1)

12 Operate the clutch pedal and ensure clutch is work properly but clutch pedal free play is excess than specified limit.

Fig 1

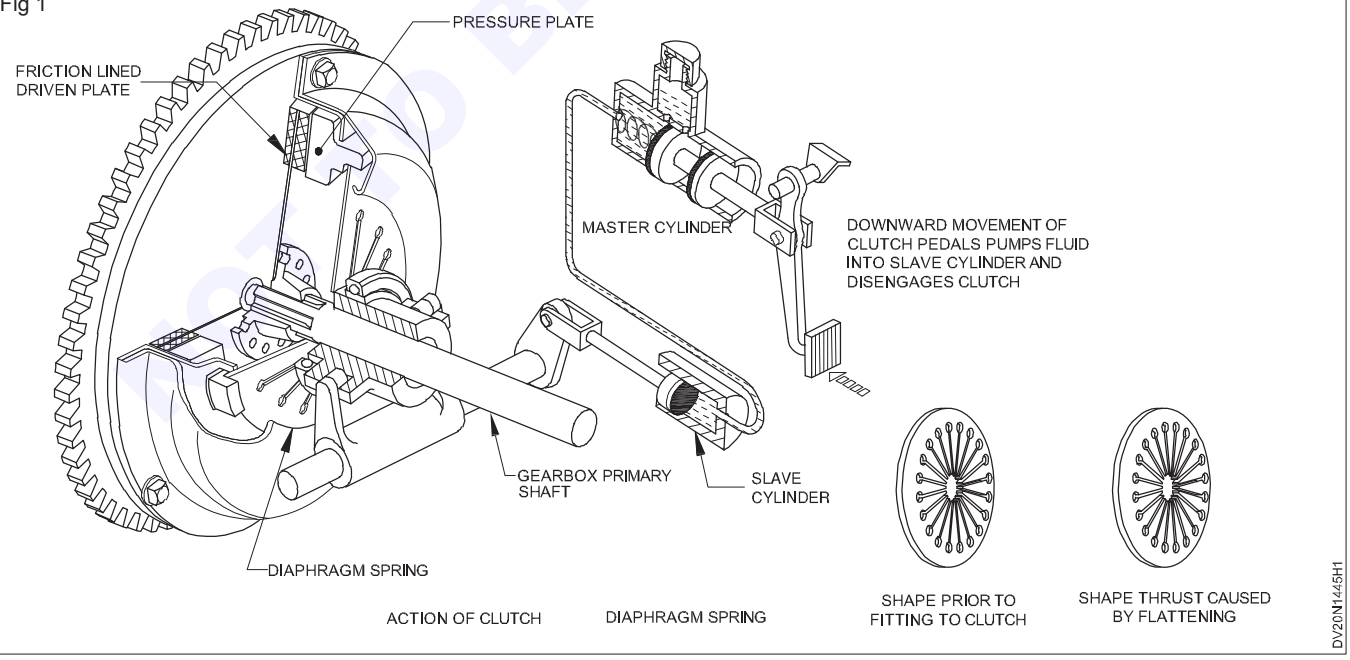

© NIMI NOT TO BE REPUBLISHED

TASK 2: **Adjust the clutch pedal free play (Fig 1)**

Fig 1

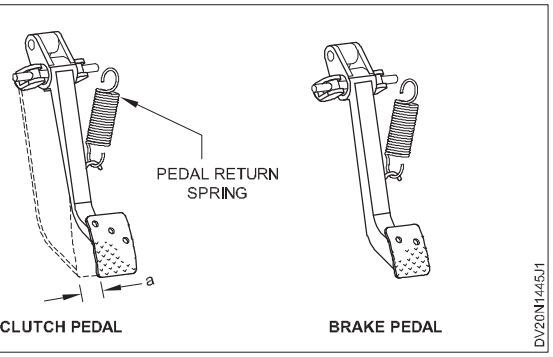

1 Check the clutch pedal returning spring tension, if need replace the spring.

2 Check the clutch pedal free play by pressing clutch pedal.

3 Observe the play is less or more than specified limit.

4 Release the clutch pedal and identify the clutch pedal free play adjusting nut.

5 Loosen the locknut and adjust the free play adjusting bolt by loosen or tighten it, till you achieve the correct free play.

6 Set the free play as specified limit recommended by the vehicle manufacturers.

7 Again check the free play of the pedal.

8 Tighten the lock nut to the required free play of pedal is achieved.

— — — — — —

© NIMI NOT TO BE REPUBLISHED

Practice to top-up brake fluid in the master cylinder

Objectives: At the end of this exercise you shall be able to
- **check and top-up brake fluid in master cylinder reservoir.**

Requirements

Tools/Instruments

- Trainee's tool kit - 1 No.

Equipment/Machines

- Vehicle (LMV) - 1 No.

Materials/Components

- Cotton waste - as reqd
- Soap oil - as reqd
- Brake fluid - as reqd

PROCEDURE

Check and top-up brake fluid in master cylinder reservoir.

1 Park the vehicle on the shop floor.

2 Apply parking brake and wooden chock to the wheels.

3 Clean the vehicle with high pressure air.

4 Open the vehicle bonnet cover and engage the bonnet stopper.

5 Identify the master cylinder reservoir (Fig 1)

Fig 1

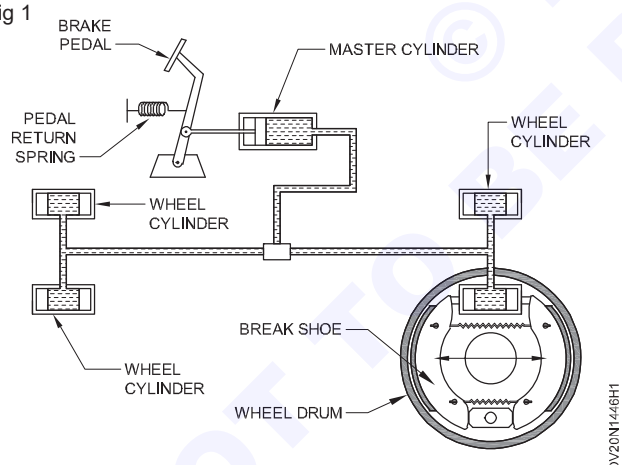

6 Open the master cylinder cap/cover

7 Check the level of the fluid in reservoir (Fig 2)

Fig 2

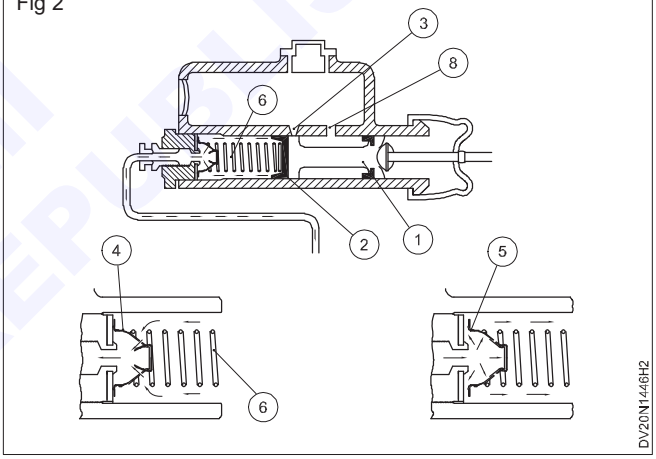

8 Check the master cylinder reservoir cap breathing hole, if hole is blocked, clean the cap breathing hole.

9 Check the master cylinder reservoir fluid level. If found fluid level is low, top-up the fluid up-to specified level by correct graded brake fluid (Hydraulic oil)

10 Ensure the master cylinder fluid level is as recommended by the maunfacturer.

© NIMI NOT TO BE REPUBLISHED

Practice to bleeding the hydraulic brake system

Objectives: At the end of this exercise you shall be able to
- **bleed the vehicle hydraulic brake system.**

Requirements

Tools/Instruments

- Trainee's tool kit - 1 No.
- Brake bleeding kit - 1 No.

Equipment/Machines

- Vehicle (LMV) - 1 No.

Materials/Components

- Brake fluid - as reqd
- Cotton waste - as reqd
- Soap oil - as reqd
- Wheel chock - as reqd

PROCEDURE

1 Clean all the dirt found around the master cylinder filter cap (1).

2 Remove the filter cap (1). (Fig 1)

Fig 1

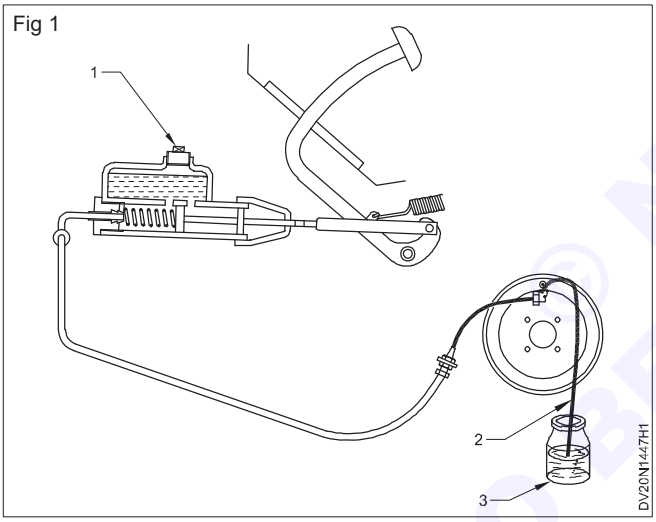

3 Fill the fluid in master cylinder up to the lower edge of the filler neck.

4 Close the filler cap.

5 Clean the wheel cylinder's bleeder nipple connection.

6 Connect the bleeder hose (2) to the longest distance of the wheel bleeder screw.

7 Place the other end of the tube in a glass jar (3) and submerge it in the brake fluid.

8 Apply the brake pedal three or four times until pressing is felt hard.

9 Open the bleeder screw one half to three quarters of a turn and observe in the jar. Bubbles will form in jar.

10 Repeat this until only the fluid comes out of the bleeder screw forcing all the air in the line.

11 Close the bleeder screw.

12 Fill the brake fluid again in the master cylinder.

13 Close the filler cap.

14 Repeat the above steps for all the 4 wheels

15 After removing air from all the 4 wheels fill the brake fluid in the master cylinder reservoir to the required level.

16 Close the filler plug and check the tightness of the bleeder screw in all the 4 wheels.

Note: The above hydraulic brake bleeding procedure system is same as for a disc brake drum brake vehicles.

NOT TO BE REPUBLISHED © NIMI

Practice on vehicle brake pedal free play adjustment

Objectives: At the end of this exercise you shall be able to
- **adjust the vehicle brake pedal free play.**

Requirements

Tools/Instruments
- Trainee's tool kit - 1 No.

Equipment/Machines
- Vehicle (LMV) - 1 No.

Materials/Components
- Cotton waste - as reqd
- Soap oil - as reqd

PROCEDURE

Adjusting brake pedal free play (Fig 1)

Fig 1

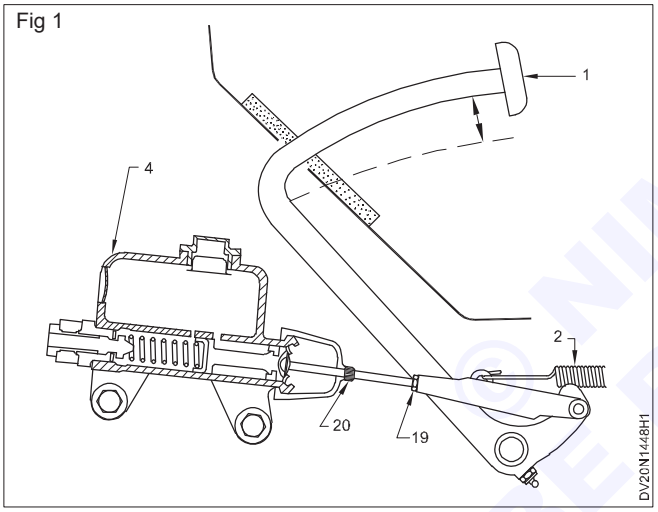

1 Park the vehicle on the shop floor.

2 Apply parking brake and wheel chocks.

3 Identify the brake pedal and adjusting nut of master cylinder piston push rod (19)

4 Check the brake pedal free play, if found more or less than specified limit loosen the lock-nut (19) and ensure there is no brake spongy.

5 Adjust the master cylinder piston push rod by rotating the push rod clockwise or anticlockwise until you want to specified free play limit.

Note: Piston push rod rotation will cause the free play to change. Replace pedal returning spring, if weak spring tension.

6 As piston push rod rotates, test the brake pedal's free play by pushing it with your hand, it will slowly increase or decrease the pedal free play.

7 Set the brake pedal free play as 12mm or as specified by vehicle manufacturers.

8 Once you have the brake pedal free play adjusted properly, tighten the piston push rod lock nuts.

9 Test the pedal heights to make sure they don't feel spongy.

10 Ensure your vehicle brake pedal free play is properly adjusted.

NOT TO BE REPRINTED © NIMI

Practice to check the level of power steering oil in the reservoir

Objectives: At the end of this exercise you shall be able to
- **check the hydraulic oil level of power steering reservoir.**

Requirements

Tools/Instruments
- Trainee's tool kit - 1 No.

Equipment/Machines
- Vehicle (LMV) - 1 No.

Materials/Components
- Cotton waste - as reqd
- Soap oil - as reqd
- Hydraulic oil - as reqd

PROCEDURE

Checking the oil level of power steering reservoir

1 Park the vehicle on the shop floor.

2 Apply parking brake and wooden wheel chocks.

3 Identify the power steering operational system.

4 Identify the type of power steering.

5 Locate the power steering hydraulic oil reservoir.

6 Check the leakage of the hydraulic steering fluid system.

7 If found any damage hose or leakage in the circuit, rectify the defects.

8 Remove the fluid reservoir cap.

9 Observe the fluid level in the power steering reservoir.

Note: Most power steering reservoir are made of clear plastic and the cap does not need to be removed to observe the fluid level. Fluid level is visible from the outside of reservoir.

10 If fluid level is low in reservoir, top-up up to level with correct graded hydraulic oil.

11 Suppose fluid discoloration or burned, replace the fluid of reservoir.

12 After replacing the power steering reservoir fluid, bleed the system for remove the air from the fluid circuit of power steering.

13 Check the pressure test and if need top-up the fluid level in power steering reservoir (Fig 1)

Note: Check the power steering reservoir fluid level is within hot level of the tank or dipstick if the fluid is cold, check that it is within the cold of tank or dipstick (Fig 2)

Fig 1

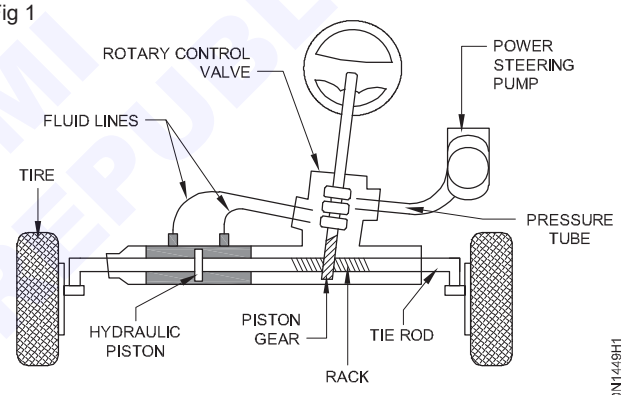

POWER STEERING SYSTEM

Fig 2

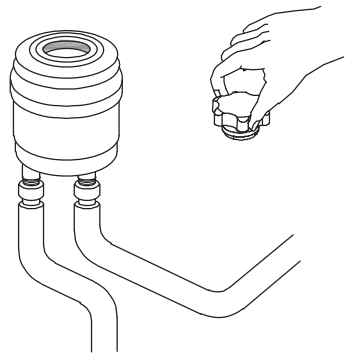

POWER STEERING FLUID RESERVOIR

© NIMI NOT TO BE REPUBLISHED

Practice to grease the vehicle suspension greasing points

Objectives: At the end of this exercise you shall be able to
- **grease the vehicle suspension greasing points.**

Requirements

Tools/Instruments

- Trainee's tool kit - 1 No.
- Hand grease gun - 1 No.

Equipment/Machines

- Vehicle (LMV) - 1 No.
- Air compressor - 1 No.
- Power grease gun - 1 No.

Materials/Components

- Cotton waste - as reqd
- Soap oil - as reqd
- Grease - as reqd
- Wheel chocks - as reqd
- Jack stand - as reqd
- Floor jack - as reqd

PROCEDURE

Greasing the vehicle suspension's greasing point

1 Park the vehicle on the clean shop floor.

2 Locate your jacking points provided on the vehicle.

3 Place the jack under the vehicle chassis.

4 Jack up the vehicle and fix the vehicle jack stand or park the vehicle on greasing fits.

5 Secure the wheel from rolling the vehicle.

6 Access your car components.

7 Use a creeper to slide yourself under your car.

8 Keep the grease gun and rag in your hand.

9 Spot the serviceable car components like ball joints and fix rods as they have grease fittings on them.

10 Identify the all other suspension greasing points of your vehicle.

11 Fill in the components with grease by manual or using grease gun.

12 Connect your grease gun to all grease points one by one and fill them with grease by pulling the grease gun trigger.

13 Repeat this process until all the components are filled but avoid too much greasing, otherwise, they might brush loose.

14 However some components are designed to let the grease escape when full greased.

15 If you notice grease come out from the rubber boots, it indicate they are full greased.

Note: While grease manually, it can make your hands dirty. So only use the air compressed grease gun.

16 Remove the excess grease in all greasing points (Fig 1)

17 Grease your vehicle rear suspension if grease points provided in your vehicle (Fig 2)

Fig 2

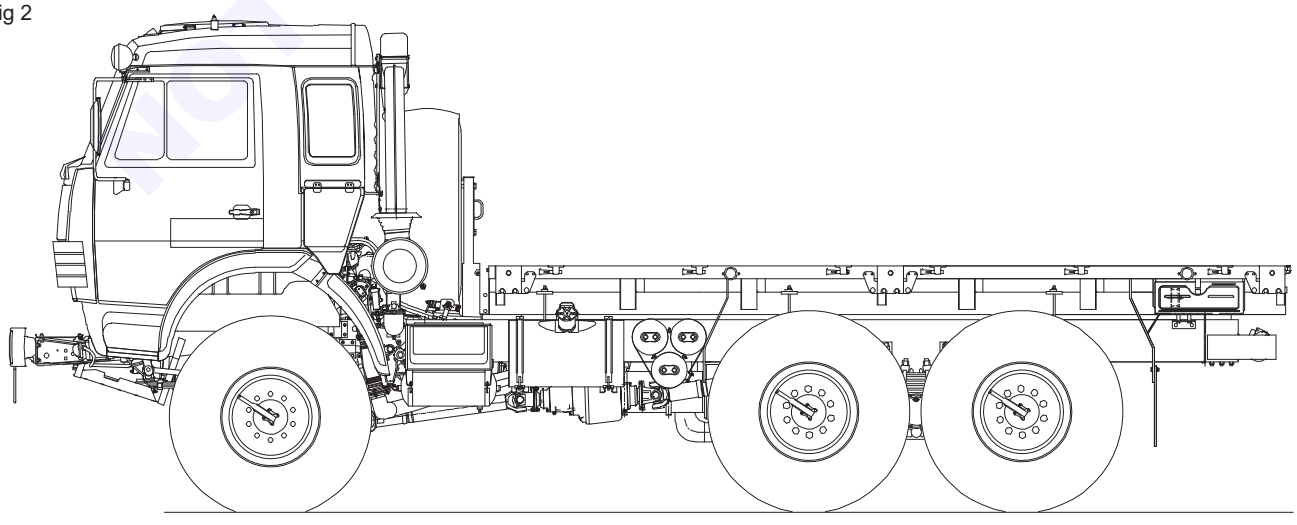

© NIMI NOT TO BE REPUBLISHED

Fig 1

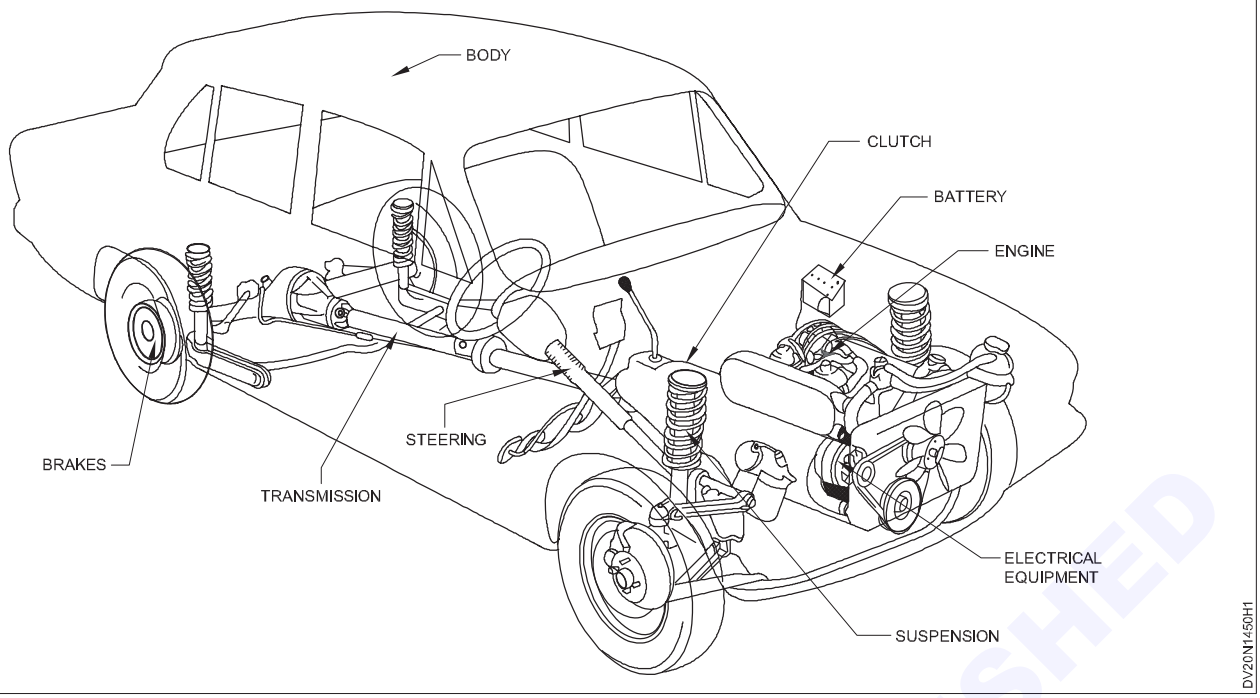

Note: Refer the vehicle owner's manual to locate the suspension lubrication and greasing points.

- **Identification of suspension lubrication point.**
  - While vehicle crossing over bumps makes squeaking noise.
  - When vehicle turning, it makes a groaning sound.
  - Suspension does not function smoothly or it is bumpy.
  - It makes loud noise when vehicle turns.
  - If found any one of above said noise, identify and grease or lubricate the point to arrest the friction noise.
  - After lubricate the vehicle suspension greasing/ oiling points, Ensure there no any frictional sound is come from suspension system, while driving a vehicle.

© NIMI NOT TO BE REPUBLISHED

Practice on remove and refit of fuses and bulbs

Objectives: At the end of this exercise you shall be able to
- **remove and refit the fuses between electrical circuit**
- **remove and refit the signal lamps, head lamps, parking lamp bulbs.**

Requirements

Tools/Instruments

- Trainee's tool kit - 1 No.
- Test Lamp - 1 No.
- User manual - 1 No.

Equipment/Machines

- Vehicle (LMV) - 1 No.

Materials/Components

- Cotton waste - as reqd
- Soap oil - as reqd
- Wire - as reqd
- Bulb - as reqd
- Insulation tape - as reqd

NOT TO BE REPUBLISHED © NIMI

PROCEDURE

TASK 1: **Removing and refitting the fuses in the electric circuit**

1 Check the battery charge.

2 Connect the test lamp clip to a good ground. Touch the probe on the test lamp on either end of the fuse. If the test lamp lights, the fuse is in good condition. If the test lamp lights outs only while touching one side that means the fuse is defective. If the test lamp does not light even on touching both the sides that means the power source is not on or the ground connection is bad.

3 Remove the fuse from its spring clip. Check whether it is blown or not. If blown, replace it using pull out tool (Fig 3 & 4)

Note 1: If it is blown we can see through the glass tube. Good fuse can see through glass. (Fig 1)

Note 2: If he fuse is blown due to short circuit the color of glass tube becomes black (2) and the fuse wire melts like small balls. (Fig 2)

Note 3: If the fuse is blown (2) due to overload the fuse wire is simply cut off (Fig 3)

Fig 1

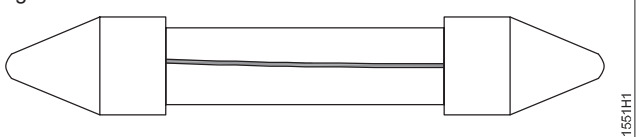

GOOD FUSE

DV20N1551H1

Fig 2

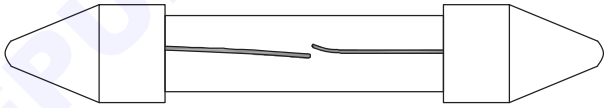

DV20N1551H2

Fig 3

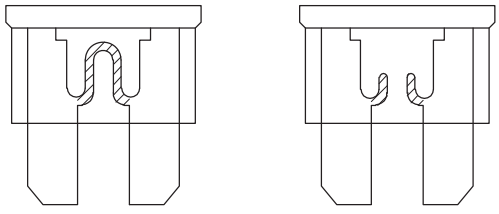

CHECKING AND REPLACING FUSES

DV20N1551H3

Fig 4

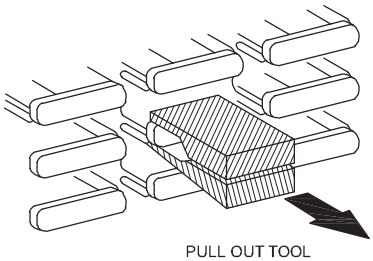

CHECKING AND REPLACING FUSES

DV20N1551H4

TASK 2: **Remove and refit the signal, head and parking lamp bulbs**

Indicator lights.

1 Parking the vehicle on the vehicle repair bay.

2 Apply parking brake and wooden wheel chocks.

3 Switch on the main ignition switch.

4 Trace the indicator light circuit.

5 Operate the left side indicator light, observe the (light) bulb glowing in front and rear side of the vehicle.

6 Operate the right side indicate light and observe the (light) bulb glowing in front and rear side of the vehicle.

7 If any bulb is not functioning, check wire connection, bulb, bulb earthing etc.

8 If bulb is blown out, remove and refit the new bulb.

9 Again check the signal light for proper functioning.

10 Ensure both side signal light is working.

Head lights

1 Operate the head light switch.

2 Check the head light glowing.

3 In case any light is not glowing check the wire connection and bulb earthig , bulbs etc.

4 Unscrew the head light screws securing the head light rim.

5 Take out the rim along with the rubber dust excluder (1)

6 Press the light unit and turn it in the anticlockwise direction, so that the light unit (2) will come out.

7 Turn the bulb holder (3) in the anticlockwise direction to take out.

8 Remove the bulb and refit the new bulb in bulb holder.

Note: While removing the light unit ensure that the adjusting screws (5) are not disturbed. (Fig 1)

Fig 1

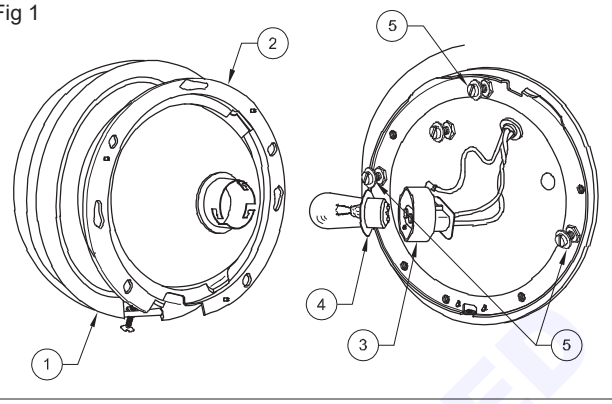

Assembling the light units

Check the front lens and reflector and replace, if found damaged.

Position the new light unit on the rim.

Ensure that the locating tabs at the edge of the light unit fit into the slots in the rim.

Ensure that the unit retaining ring is correctly positioned.

Engage the projections on the bulb holder with the slots or flanges in the bulb sleeve.

Press and twist clockwise to fit the light assembly with the rim on the vehicle by the rim securing screws. Assemble all other light units by securing the screws/ lock-rings.

Testing

Test all the lights by operating all the switches, after completing all the checking, by connecting to a battery of proper voltage.

— — — — — —

TASK 3: **Remove and refit the parking light bulbs**

1 Identify the parking light circuits.

2 Switch on the parking light

3 Check the bulbs glowing in front and rear of the vehicle.

4 If any bulb is not glowing unscrew the screws of parking light.

5 Remarks the lock rings if provided.

6 Remove the light lenses.

7 Remove the bulb (while removing the bulbs, check for loose connection).

8 Check the bubs for fuse by connecting wires from the battery as shown fig 1

Checking the bulbs (Fig 1)

1 If bulb found fuse or any other defect replace the bulb with new one.

2 Fit the bulb in bulb holder.

3 Assemble the parking light and check it for functioning.

4 Ensure parking light is working properly.

Fig 1

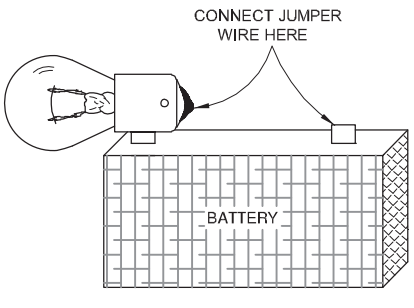

— — — — — —

© NIMI NOT TO BE PUBLISHED

Practice to check and adjust head light high and low beams

Objectives: At the end of this exercise you shall be able to
- **check the head light high beam, low beam and pass by beam**
- **read just the high and low beam**
- **check the light beams level area of floor.**

Requirements

Tools/Instruments

- Trainee's tool kit - 1 No.
- Test Lamp - 1 No.

Equipment/Machines

- Vehicle (LMV) - 1 No.

Materials/Components

- Cotton waste - as reqd
- Soap oil - as reqd
- Wire - as reqd
- Bulbs - as reqd
- Insulation tape - as reqd

PROCEDURE

Check and adjust the head light beam

1 Park the vehicle on the shop floor and apply parking brake.

2 Check the air pressure in the tyres and inflate them to the correct pressure.

3 Check the head lamp mountings. (Fig 1)

Fig 1

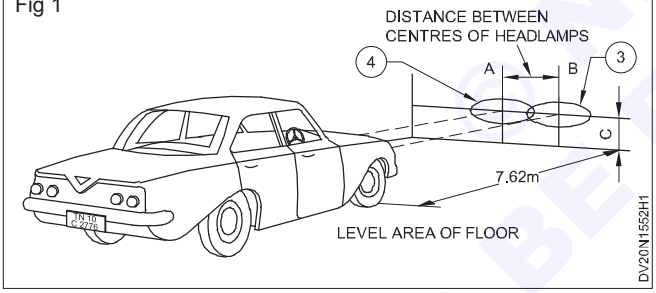

4 Position the car 7.62 meters away in front of a white screen or a plain wall.

5 Mark the distance between the centre's (A & B) of the headlamps with respect to the axis of the car.

6 Ensure that the front of the car is square to the screen.

7 The car is to be loaded as it will be while being driven for most of the time.

8 Cover up one lamp while aligning the other by a cloth or paper.

9 Mark the height (C) of the headlamps on the screen, two inches below the actual height of the headlamps.

10 Normal value of C (figure) is equal to the height from the floor to the centre of headlamp minus 2" when headlamps are 25 ft. or 7.62 m apart from the screen.

Setting the beams (Fig 2)

1 Adjust the headlamp beams by the vertical adjusting screw (1) or the horizontal adjusting screw (2).

2 Ensure that the main beam's high internally zone falls as show (3) and (4).

Fig 2

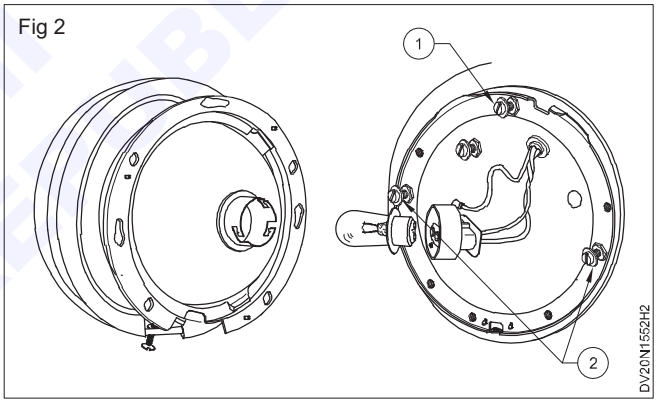

3 Ensure the upper beam is adjusted separately after throwing it separately on the white screen.

4 Observe the headlamp main beam directed straight ahead and parallel to the road when the vehicle is fully loaded. (Refer to the diagram).

Adjustment of headlamps (Fig 3)

Fig 3

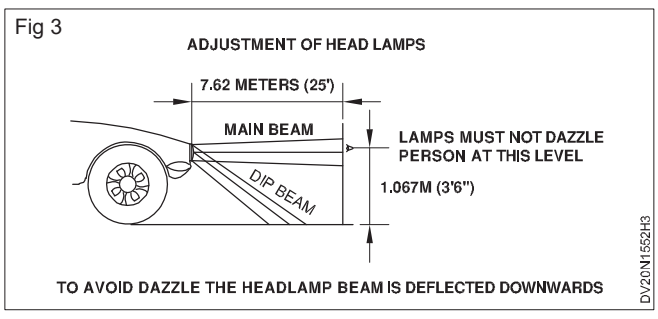

1 Adjust if required.

2 Operate the dip switch by foot/hand. Observe the dipped beam dipping downwards and towards the karb.

© NIMI NOT TO BE REPUBLISHED

Practice to check the combination switch of a vehicle

Objectives: At the end of this exercise you shall be able to
- **check the combination switch**
- **check the directional control switch**
- **check the wiper intermittent operation.**

Requirements

Tools/Instruments

- Trainee's tool kit - 1 No.
- Test Lamp - 1 No.
- Multimeter - 1 No.

Equipment/Machines

- Vehicle (LMV) - 1 No.

Materials/Components

- Cotton waste - as reqd
- Soap oil - as reqd
- Combination switch - as reqd
- Wiper blade - as reqd
- Insulation tape - as reqd

PROCEDURE

TASK 1: **Check the combination switch.**

1 Park the vehicle on the vehicle shop floor.

2 Apply parking brake and wooden chocks to wheels.

3 Refer the vehicle (owners) user manual for the function of combination switch and their location.

4 Identify the location of combination switch in a vehicle. (Fig 1)

Fig 1

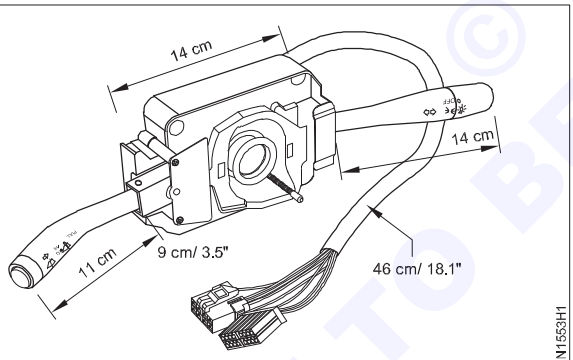

COMBINATION SWITCH

5 Check the directional control switch lever and wiper switch lever fitted with combination switch.

6 Check combination switch wire connections and their fitting

7 Ensure the combination switch is properly connected with circuit wire coupling point.

Note:

- **The power goes through a fuse panel into the thermal flasher from here it goes to the stalk on the steering column depending on the position of the turn signal stalk the power either stops in the switch or gets sent to the left or right turn signal lights (including the indicator lights on the dashboard).**
- **On most cars the turn signal lever is located to the left of the steering wheel.**

TASK 2: **Check the directional control switch**

1 Switch on the main ignition switch.

2 Identify the combination switch directional indicator lever position. (Fig 1)

3 Lift up the directional indicator lever towards up by using your left hand.

4 Check the instrument panel lights indicate the right arrow.

5 Neutral position the combination switch directional indicator lever.

6 Shift the lever towards downward and observe the vehicle dash board panel light. Indicate to left direction.

Fig 1

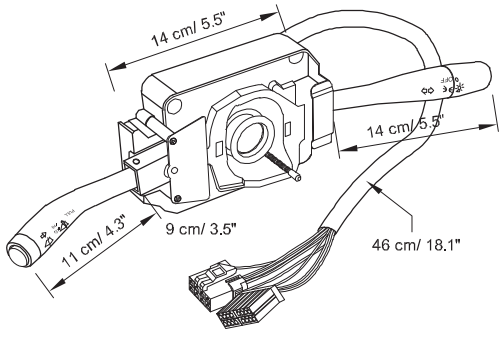

COMBINATION SWITCH

© NIMI NOT TO BE REPUBLISHED

7 Ensure your combination switch directional control switch is function properly if found any malfunction. Remove or replace the combination switch. (if unable to repair it)

— — — — — —

TASK 3: **Checking the wiper intermit high and low operating system**

1 Check wiper electrical wire circuit.

2 Identify the combination switch.

3 Identify the combination switch wiper operating lever switch (Fig 1)

Fig 1

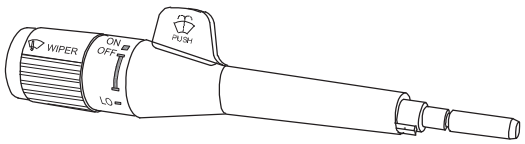

Switch lever positions

- Mist
- OFF
- INT- Low speed with intermittent
- LO- Low speed
- HI- High speed

4 Check the wiper switch lever positions neutral low and high speed position.

5 Check the wiper blade (Fig 2) and arm fitting.

Fig 2

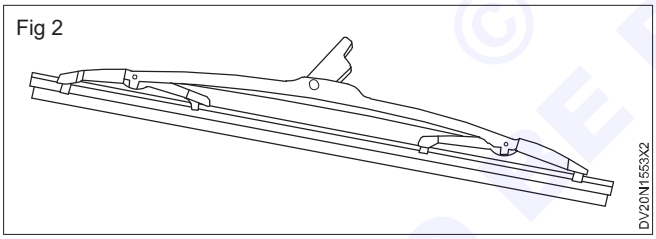

6 Check the wiper arm position sit on the windscreen.

7 Ensure wiper arm and wiper blade is fitted properly and positioned at right way.

8 Move the wiper (operation) switch lever towards up position of mist.

9 Check the operation of wiper motor and wiper arm speed (low or high speed)

10 Neutral the liver and ensure wiper arm operation has stopped.

Note: The function of the wiper motor is commonly controlled via rotating knob on a lever is the steering column fitted high combination switch.

11 Move the lever towards low speed intermittent position.

12 Check the wiper arm moving at low speed three to four strokes.

13 Shift the wiper switch lever towards low speed, and ensure the wiper motor continues work at slowly.

14 Shift the wiper switch lever towards high speed mark on the switch and ensure the wiper motor is work at high speed and wiper blade move fast for cleaning the wind screen.

15 Shift the wiper switch lever toward 'OFF' mark position and ensure the wiper motor stop the moving function of wiper blade.

Note: Car wiper components are wiper blade, link switch, motor and wiper arm.

— — — — — —

© NIMI NOT TO BE REPUBLISHED

Practice on cleaning and top up of a lead acid battery

Objectives: At the end of this exercise you shall be able to
- **clean the battery terminals and the body of the battery**
- **top-up electrolyte level with distilled water.**

Requirements

Tools/Instruments

- Trainee's tool kit - 1 No.

Equipment/Machines

- Vehicle (LMV) - 1 No.

Materials/Components

- Vaseline - as reqd
- Battery acid - as reqd
- Distilled water - as reqd
- Cotton rag - as reqd
- Water emery - as reqd

PROCEDURE

Cleaning and top up of lead acid battery

1 Disconnect the negative cables first from the battery terminal.

2 Disconnect the positive cables from the battery terminal.

3 Remove the mounting clamp nuts.

4 Lift the battery from the vehicle.

5 Clean the top of the battery with water and cotton rag.

6 Clean the battery terminals by a non- metallic wire brush or emery paper.

7 Remove the vent plug and check the electrolyte level of each cell of battery.

8 Top up the electrolyte level with distilled water.

Note: Check fluid level in each cell, if it is below upper level and distilled water up to upper as shown in the Fig 1.

9 Check the battery charge condition by using hydrometer as shown in the Fig 2.

Fig 1

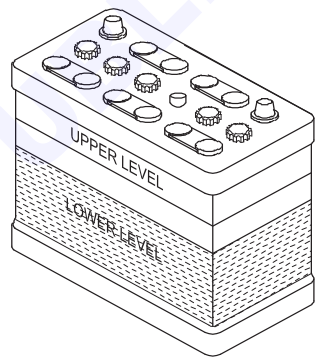

DV20N1554H1

Fig 2

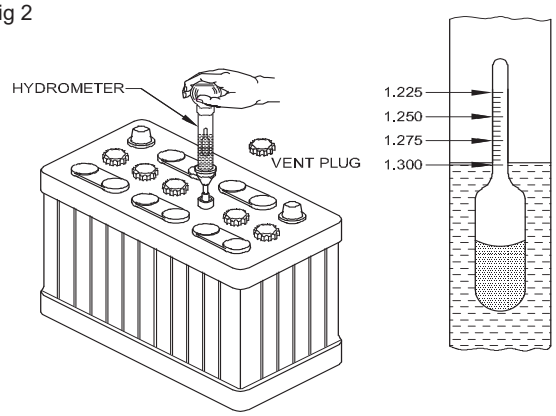

TESTING SPECIFIC GRAVITY OF A BATTERY

DV20N1554H2

© NIMI NOT TO BE REPUBLISHED

Practice to remove and refit the lead acid battery from the vehicle

Objectives: At the end of this exercise you shall be able to
- **remove and refit the battery from the vehicle.**

Requirements

Tools/Instruments

- Trainee's tool kit - 1 No.
- Brush - 1 No.
- Battery gel - 50 gm.

Equipment/Machines

- Vehicle (LMV) - 1 No.

Materials/Components

- Cotton rag - as reqd
- Soap oil - as reqd
- Emery sheet - as reqd

PROCEDURE

Removing and refitting the lead acid battery of a vehicle.

Battery removing method

1 Park the vehicle on the shop floor.

2 Apply hand brake and wooden chocks to the wheels.

3 Check owner's manual to identify the battery location on the vehicle.

4 Locate the battery fitting on the vehicle.

5 Identify the positive and negative terminals.

6 Select the proper tools to open the terminal wire.

7 Loosen the terminal cable bolts (positive and negative terminals)

8 Remove the battery cables from the terminal.

9 Remove the battery clamp and battery.

10 Place the battery on safe place.

11 Clean the battery.

12 Check the battery condition, if need replace the battery.

Battery fitting method

1 Prepare the battery to install in a vehicle.

2 Select the tools for refitting the battery.

3 Collect the cable clamp puller and cable clamp spreader.

4 Collect the tapered terminal and cable clamp cleaning brush.

5 Use the scrapper and wire brush while preparing the battery cable.

6 Select the best car battery (size and amp hours)

7 Install the new battery on the vehicle (Battery must be level in the tray).

8 Fix the battery bracket and tighten bracket nut bolts.

9 Attach both cables (positive(red) and negative (black) with battery terminals.

10 Hand tighten the nuts.

Note :

- **Don't over tighten the battery terminal bolt and nuts.**
- **Replace the cable connections that show sign of corrosion, rust or other damage.**

11 Tighten the battery terminal, cable nuts as specified torque recommended by the manufacturer.

12 Ensure your vehicle battery is properly fitted.

© NIMI NOT TO BE REPUBLISHED

Practice to check battery charging system

Objectives: At the end of this exercise you shall be able to
- **check the alternator output**
- **check the battery charging and other power units.**

Requirements

Tools/Instruments

- Trainee's tool kit - 1 No.
- Owner's manual - 1 No.

Equipment/Machines

- Vehicle (LMV) - 1 No.

Materials/Components

- Wire - as reqd
- Wire clip - as reqd
- Cotton waste - as reqd
- Soap oil - as reqd
- Insulation tape - as reqd

PROCEDURE

TASK 1: **Checking the alternator's output**

1 Park the vehicle on shop floor.

2 Apply parking brakes and wheel chokes.

3 Refer vehicle user manual.

4 Identify the location of alternator.

5 Identify the fan belt.

6 Check the fan belt condition and fan belt tension.

7 If found fan belt is damaged, loosen the alternator mounting bolts.

8 Move the alternator towards the engine slightly.

9 Remove the drive belt from the vehicle.

10 Replace the belt and fit it on the vehicle.

11 Clean the belt pulley and tensioner.

12 Check the belt pulley aligned properly.

13 Insert the belt and check the belt is properly seated in pulley's 'V' cut.

14 Turn the belt tensioner till it gets stopped.

15 Place the pry bar to tighten the alternator drive belt.

16 Pry against the alternator housing pry bar.

17 Check he belt tension with tension gauge or manually press by your hand (Belt tension is normally 12-13 mm.).

18 Tighten the alternator's mounting bolt and bracket or belt tensioner mounting belt.

19 Ensure belt tension is properly (Fig 1) adjusted as specified limit by the manufacturer.

Fig 1

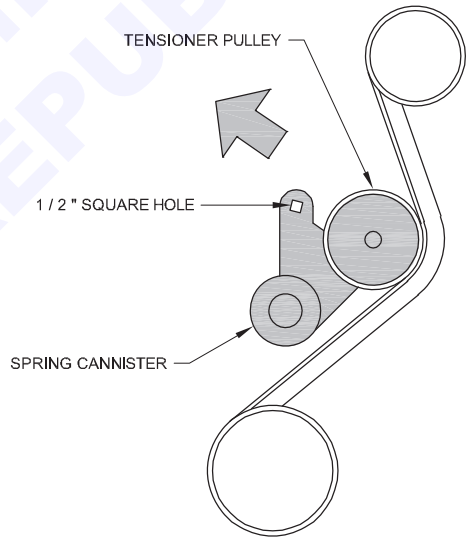

A ONE - HALF INCH DRIVE OPENING IN THE TENSIONER PULLEY

20 Check the alternator's wire connections.

21 Start the engine and check the alternator's power output by using multi meter or check by your vehicle dash board warming lights.

22 Ensure alternator is working properly.

— — — — — —

TASK 2: **Checking the battery charging circuit**

1 Check the battery terminals and terminal cables.

2 If battery terminal is damaged or dirty repair it.

3 If found the battery terminals are damaged or loose connections, replace the cable and tighten the terminal cable nuts and bolts.

© NIMI NOT TO BE REPUBLISHED

4 Switch on the ignition and check the battery charging indicator lights ON.

5 Start the engine. Raise the engine to 2000 RPM and check the changing indicator lights turn OFF.

6 If the charging indicator light does not ON during ignition ON ,then follow the steps.

7 Check the charging circuit fuse.

8 If fuse is good, then check the condition of the charging indicator bulb. Replace bulb if necessary.

9 Check and tighten the connections. Check the wirings for frayed insulation and other physical damage.

10 If changing indicator light does not go out with the engine running then follow the steps.

11 Check the drive belt for its correct tension. (Fig1)

Fig 1

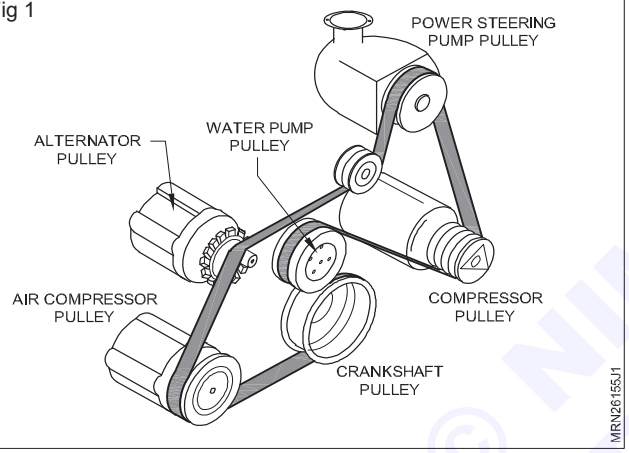

12 Check battery and connection.

13 Check fuse.

14 Connect the multimeter with battery terminals.

15 Set to measure voltage in the range of 6v to 60v.

16 Start the engine and check the battery voltage.

17 If the battery shows 14.2V to 14.8V then charging system is in good condition. Otherwise decide the problem with the alternator or charging circuit. (Fig 2).

18 If the battery charging circuit is ok ,then check the outer power units like car A/C ,audio systems.

Fig 2

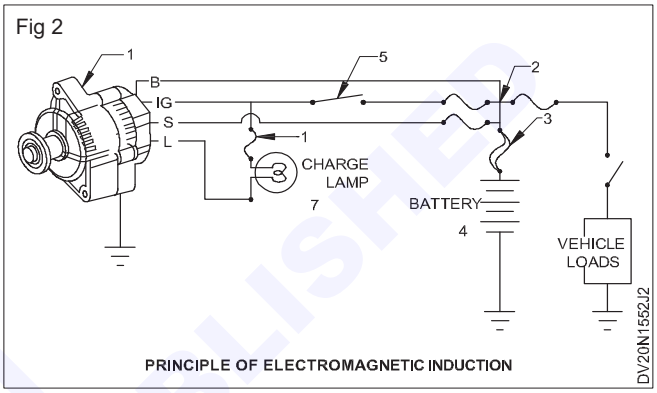

© NIMI NOT TO BE REPUBLISHED

Practice to remove and refit the wheel of a vehicle

Objectives: At the end of this exercise you shall be able to
- **remove and refit the wheels of a vehicle.**

Requirements

Tools/Instruments

- Trainee's tool kit - 1 No.
- Vehicle emergency kit - 1 No.

Equipment/Machines

- Vehicle (LMV) - 1 No.

Materials/Components

- Cotton waste - as reqd
- Soap oil - as reqd

PROCEDURE

TASK 1: **Remove the wheel from the vehicle**

1 Park the vehicle on the plain surface.

2 Chock the opposite side of the wheels with wooden blocks.

3 Loosen the wheel nuts with the help of wheel spanner .(Fig1)

4 Jack the wheel by hydraulic / mechanical jack above the land surface.

5 Place the wheel jack stand under a vehicle chassis.

6 Remove all the nuts of the wheel.

7 Carefully remove the wheel from the vehicle.

8 Follow the above steps to remove all tyres of a vehicle.

9 Place the tyres on hard plane surface for further process.

Fig 1

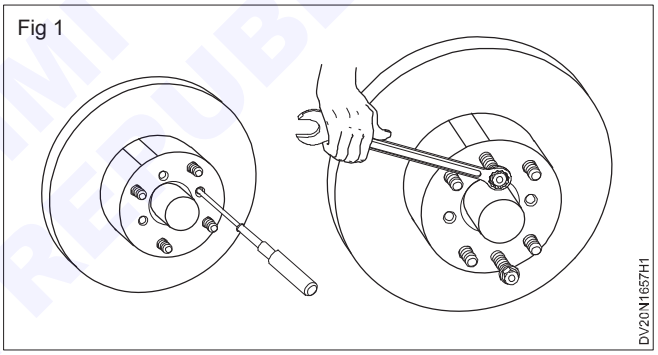

— — — — — —

TASK 2: **Refitting the wheels of a vehicle**

1 Clean the tyre and wheel disc.

2 Check the tyre air pressure and tyre condition.

3 If found any tyre damage replace it with new one.

4 Ensure the tyre is free of wear high and low spots , damage.

5 Check the rims free of damage.

6 Check all the wheel nut edges.

7 If found any damage, replace it.

8 Check the tyre air pressure with the help of tyre pressure gauge.

9 If found all tyres are in good condition, you start to assemble the tyres with the vehicle.

10 Fix the tyres on the wheel drum and fit the tyre lock nut.

11 Tighten the wheel nuts with hand tight.

12 Fit all the four wheels of the vehicle.

13 Jack down the vehicle.

14 Tighten the wheel nuts as specified torque with the help of wheel spanner.

15 Ensure all the wheel nuts are tightened as per tighten torque given by manufacturer.

Front and rear wheel bearing

- To check the wheel bearings ,jack up the front end or rear end.
- Spin the wheel and check if it spins smoothly and is free from any abnormal noise, if it is not replace the wheel bearing.
- Upon the completion of the check in the above step ,check each joint of the steering system for tightness ,each ball of the steering link as well as kingpin or suspension arm ball stud for rattle .then check the bearing as described below.

NOT TO BE REPUBLISHED © NIMI

a Shake the wheel in the direction given by the arrow as shown at the right to see if the bearing rattles.(Figs 1-2)

b And then shake the wheel direction given by an arrow as shown at the right to see if the bearing rattles.(Fig1)

c When measuring thrust play apply a dial gauge,to the drum centre. (Fig 3)

		Maruti 800	Maruti Van	GYPSY
	Front	3.0 mm	0.5 mm	0.3mm
Thrust play limit	**Rear**	0.3 mm	0.5mm	0.5 mm

Fig 1

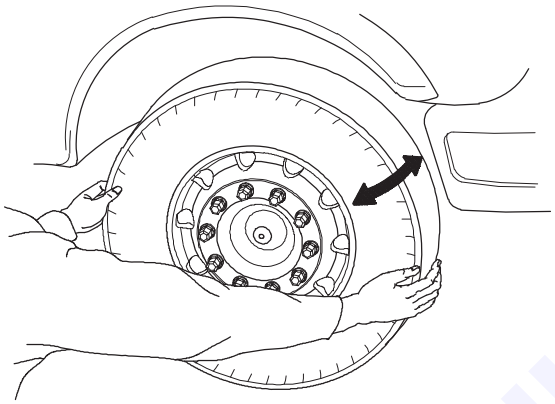

Fig 2

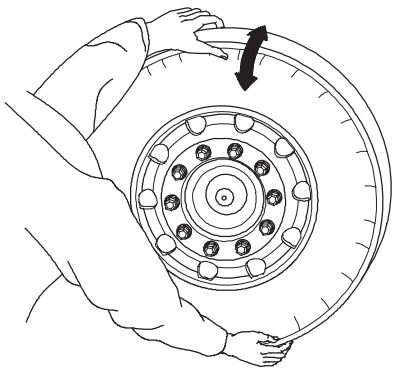

Fig 3

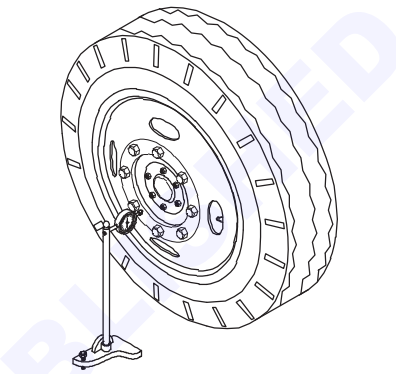

© NIMI NOT TO BE REPUBLISHED

Practice to measure the tyre tread wear

Objectives: At the end of this exercise you shall be able to
- **measure the tyre tread wear.**

Requirements

Tools/Instruments

- Trainee's tool kit - 1 No.
- Tread wear measurement gauge - 1 No.

Equipment/Machines

- Vehicle (LMV) - 1 No.

Materials/Components

- Cotton waste - as reqd
- Soap oil - as reqd

PROCEDURE

Measuring the tyre wear.

Note:

- **The legal limit for a tyre tread grove should not be below 1mm across the tread surface at any point .Tread is a rubber on the tyre that touches the road surface.**
- **Use the tread depth vernier for measuring the tyre tread depth or use the tyre tread depth gauge.**
- **Vehicle misaligned suspension will cause irregular wear on the tread surface and it reduce tyre life.**
- **While measuring the thread look for coupling.**
- **Watch out for bulges in the tyre tread or side wall and this indicates that they are not safe.**
- **Legal tyre tread is 1.6mm to 3mm.**

1 Park the vehicle on plain surface ground.

2 Clean all tyres with high pressure water and let it allow to dry.

3 Move the vehicle to dry hard surface.

4 Park the vehicle and apply parking brake and wheel chocks.

5 Refer vehicle owner's manual and tyre manufacturer reference book for tyre tread permissible weariness

6 Check the vehicle tyre treads are cleaned

7 Select the tyre tread wear measurement gauge(any one type or recommended by the tyre manufacturer).

8 Set the tyre tread measurement gauge on the tyre tread groves (Fig1)

Fig 1

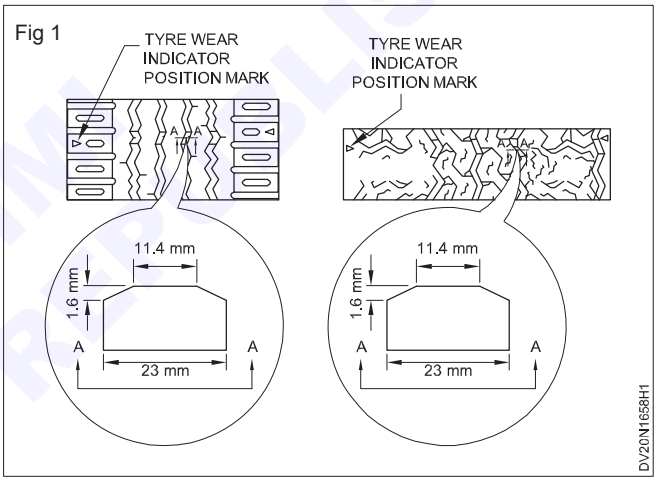

9 Measure the tyre tread depth at least at two or three places.

10 If the measured tyre wear is at the same even in all places. Recommend the tyre to be replaced (If less than 1.6 mm)

11 Check the tyre for any damage, nails and abnormal wear .If any defects are found , repair or replace the tyre.

Note:

- **Before measure the depth of tyre tread wear, Measure tyre air pressure for correct air pressure**
- **Tyre pressure should be checked when tyres are in cool condition.**

© NIMI NOT TO BE REPUBLISHED

Practice on carry out inflating the tyre with compressed air / nitrogen gas

Objectives: At the end of this exercise you shall be able to
- **check and set the tyre pressure by compressed air /nitrogen.**

Requirements

Tools/Instruments

- Trainee's tool kit - 1 No.
- Tyre pressure gauge - 1 No.

Equipment/Machines

- Vehicle (LMV) - 1 No.
- Air compressor - 1 No.
- Tyre pressure gauge - 1 No.
- Nitrogen tyre inflator - 1 No.

Materials/Components

- Cotton waste - as reqd
- Soap oil - as reqd
- Wire brush - as reqd
- Valve - as reqd
- Nitrogen gas - as reqd

PROCEDURE

Check and set the tyre pressure with the help of tyre pressure gauge

1 Select the vehicle for tyre pressure setting.

2 Park the vehicle near the vehicle tyre air filling station (point).

3 Apply parking brake.

4 Identify the vehicle type and correct the air pressure.

5 Visually check the air pressure.

6 Check the tyre tread contact on road and compare with the figure (1) shown Fig1.

Fig 1

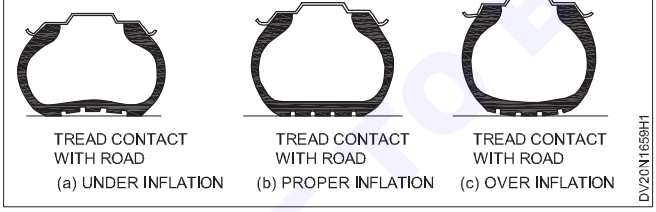

7 Check the tyre pressure with tyre pressure gauge.

8 Compare the tyre pressure with manufacturer specified limit.

9 Check the tyre pressure media (with air/ nitrogen gas).

10 If the tyre pressure is low fill the air/ nitrogen gas.

Excessive tyre pressure leads to excessive tread wear, low tyre pressure leads to excessive heat and premature failure of tyre.

11 Ensure tyre pressure is within specified limit.

12 If excess tyre pressure, adjust the air pressure to the correct level. as shown in the (Fig 1).

© NIMI NOT TO BE REPUBLISHED

Practice to repair the puncture of tubeless tyre

Objectives: At the end of this exercise you shall be able to
- **locate the puncture in a tubeless tyre**
- **apply patch cement on puncture spot of a tubeless tyre.**

Requirements

Tools/Instruments

- Trainee's tool kit - 1 No.
- Puncture repair kit - 1 No.
- Knife - 1 No.

Equipment/Machines

- Vehicle with tubeless tyre - 1 No.

Materials/Components

- Cotton waste - as reqd
- Soap oil - as reqd
- A packet of tyre repair strip - as reqd
- Rubber cement tube - as reqd
- Split eye insertion tube - as reqd
- Nail puller pliers - as reqd

PROCEDURE

TASK 1: **Locate the puncture on tubeless tyre**

1 Park the vehicle in a tyre and tube puncture repair shop.

2 Apply parking brakes and wooden wheel chocks to all wheels

3 Identify punctured tubeless tyre of a vehicle.

4 Loosen all wheel nuts of punctured tyre.

5 Jack up the vehicle and fix the jack stand under the chassis

6 Remove all wheel nuts.

7 Remove the tyre from the vehicle.

8 Check the tubeless tyre valve.

9 Fill the air in the punctured tyre.

10 Inspect the tyre for splits, cracks, punctures.

11 Apply soap water on tyre to identify air leaks, where air bubbles come out from the tyre means that spot is punctured.

12 Mark the punctured part by a marker, if any nail or anything on the tyre ,remove it.

13 If punctured area is larger from the size of the rubber plug

14 Remove the tyre from the rim and inspect the area of tyre inside (Figs 1 - 4)

15 Use the scuffing tool to roughen the surface of the tyre at the puncture site.

16 Locate the punctured or damaged area of the tyre.

17 Roughen area is larger from the size of the patch, remove all rubber particles on roughen area of the tyre.

Fig 1

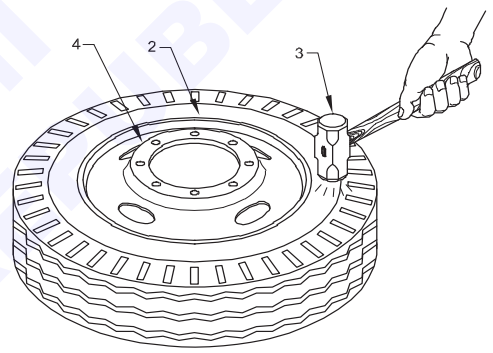

Fig 2

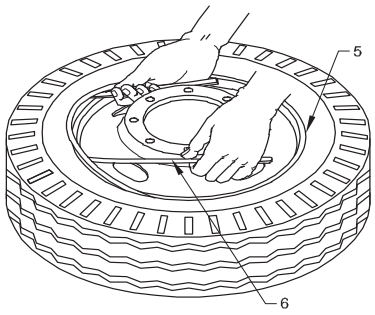

Fig 3

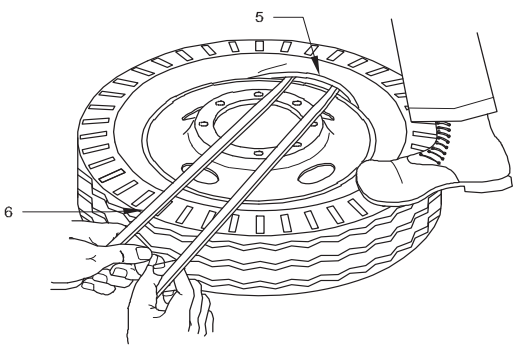

© NIMI NOT TO BE REPUBLISHED

Fig 4

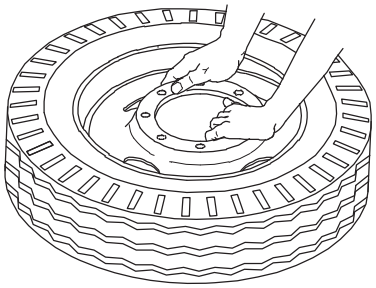

DV20N1660H4

18 Clean the key when it comes to gluing patches, add vulcanizing rubber solution to the area where you want to adjust the patch waiting for it to become tact as per the kit instructions.

19 Add the tubeless tyre patch and press down firmly .

20 Try to avoid touching the surface that is to be glued because this can contaminate the adhesive.

21 Allow it for few minutes or hours to dry the glue.

22 After repairing the tubeless tyre see it is normal.

23 Fix the tyre in rim with valve . Fill the air slowly and ensure the tyre is seated properly on the rim and fill the air as specified limit.

24 Fix the tyre on the vehicle.

— — — — — —

TASK 2: **Apply patch cement and rubber plug on punctured spot (Fig 1)**

Fig 1

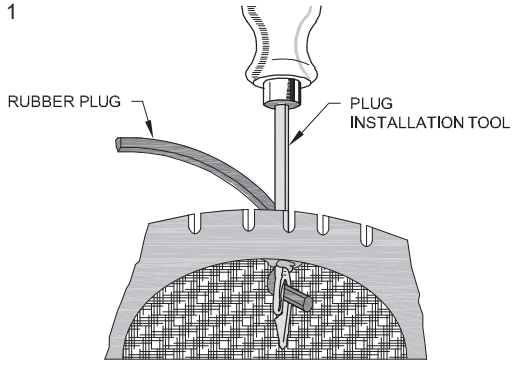

REPAIRING PUNCTURE IN TUBELESS TIRE BY PASSING RUBBER PLUG THROUGH TIRE FROM OUTSIDE

DV20N1660J1

1 Prepare the tubeless tyre puncture repair kit.

2 Inspect the tubeless tyre.

3 Remove the nail and insert the spiral probe in the puncture hole.

4 Rotate the spiral probe in each direction to clean and expand hole.

5 Take a repair strip from the pack and insert in the eye of the spilt -eye inserter tool.

6 Pull the repair strip through the eye ,so that both sides of the strip are equal in length.

7 Apply little amount of rubber cement solution over the spiral probe and insert into the tyre to cover the hole.

8 Remove the spiral probe immediately and insert 2/3 of repair strip into the hole of split eye insertion tool.

9 Twist the insertion tool 360° and pullout .

10 Ensure rubber plug is properly installed on punctured spot.

Note: Ensure repair will plug the punctured hole and the tool will come out clean.

11 Trim the excess length of the rubber strip protruding out.

12 Fill the air in tyre and check the air leaks.

Note: Tubeless puncture plugs are a quick and effective solution with these there is no need take off the tyre, just plug rest inflate and make the vehicle.

— — — — — —

© NIMI NOT TO BE REPUBLISHED

Practice on tyre rotation and wheel balancing

Objectives: At the end of this exercise you shall be able to
- **rotate the tyre according to the tyre manufacturer recommendation**
- **maintain tyre maintenance card.**

Requirements

Tools/Instruments

- Trainee's tool kit - 1 No.
- Wheel spanner - 1 No.
- Jack - 1 No.
- Wooden plank - as reqd

Equipment/Machines

- Vehicle running condition - 1 No.
- Air compressor - 1 No.
- Pressure gauge - 1 No.

Materials/Components

- Cotton waste - as reqd
- Soap oil - as reqd

PROCEDURE

TASK 1: **Rotate tyres**

1 Check the vehicle if it has four tyre rotation pattern or 5 tyre rotation pattern.

2 Check if the vehicle is front wheel or rear wheel drive or four wheel drive.

3 Choose the correct type rotation pattern to be followed format Table 1.

4 Check the vehicle has come for normal wear (Table 1) or on one side wear (Table 2).

5 Mark the tyres for FR,LH, FR RH, RH ,RR, LH RR RH and spray with the crayon/ chalk.

6 Jack up the vehicle safely and remove the tyres.

7 Check whether wheel balancing job is required and fit the tyres accordingly.

8 Also check the rim for any bend or rusting.

9 After removing the jack, ensure again that all the wheel nuts are tightened for specified torque.

Table 2

TYRE ROTATION PATTERN FOR NORMAL WEAR OR HEEL & TOE WEAR (TYRE ROTATION ONLY)						
FOUR TYRE ROTATION PATTERN			FIVE TYRE ROTATION PATTERN			
FRONT WHEEL DRIVE (FF)	REAR WHEEL DRIVE (FR)	FOUR WHEEL DRIVE (4WD)	FRONT WHEEL DRIVE (FF)	REAR WHEEL DRIVE (FR)	FOUR WHEEL DRIVE (4WD)	
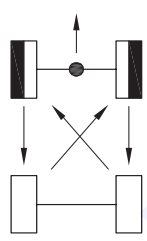	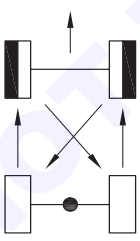	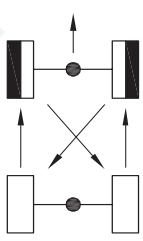	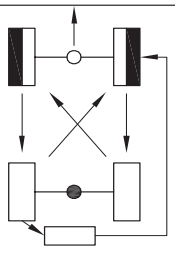	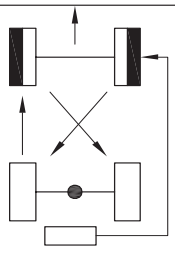	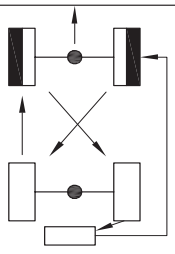	BEFORE ROTATION
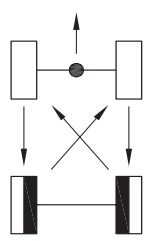	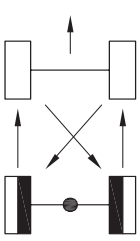	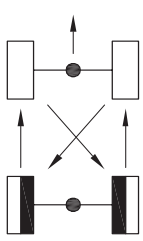	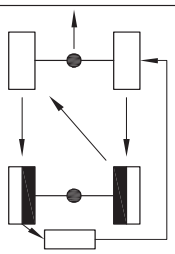	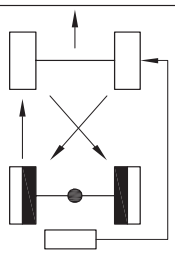	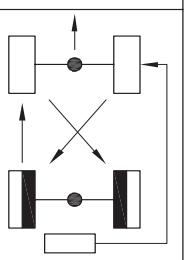	AFTER ROTATION
PROCEDURE IF ONE SIDE SHOULDERT WEAR IS FOUND IN OUTER INNER SHOULDER ,REMOVE THE TYRE FROM THE RIM AND CHANGE SIDE OF THE TYRE ,AFTER THAT DO THE ROTATION						

20N1661T2

© NIMI NOT TO BE REPUBLISHED

Table 1

TYRE ROTATION PATTERN FOR NORMAL WEAR
(TYRE ROTATION ONLY)

FOUR TYRE ROTATION PATTERN			FIVE TYRE ROTATION PATTERN		
FRONT WHEEL DRIVE (FF)	REAR WHEEL DRIVE (FR)	FOUR WHEEL DRIVE (4WD)	FRONT WHEEL DRIVE (FF)	REAR WHEEL DRIVE (FR)	FOUR WHEEL DRIVE (4WD)
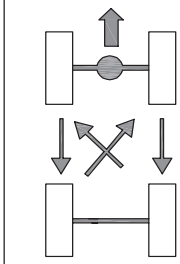	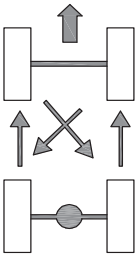	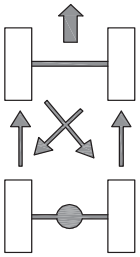	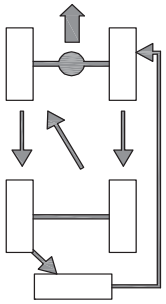	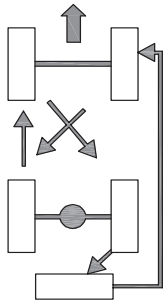	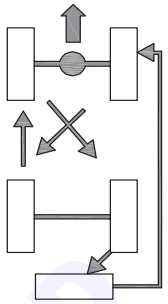

DV20N1661T1

— — — — — —

TASK 2: **Maintain tyre card**

Fill the data in the tyre card shown in the Table 3.

Table 3

S.No	Tyre number	Make	Size	KM run in different positions				
				FL	FR	RL	RR	Total
1	FX 389725 TN	MRF	715 X 16.00 12 ply	5000	5400	5987	4500	19887
2								
3								
4								
5								

— — — — — —

© NIMI NOT TO BE REPUBLISHED

Practice on air bleeding in a diesel vehicle and CRDI diesel fuel system

Objectives: At the end of this exercise you shall be able to
- **bleed the air from diesel fuel system**
- **air bleeding in CRDI diesel fuel system.**

Requirements

Tools/Instruments

- Trainee's tool kit - 1 No.
- Vehicle manual - 1 No.

Equipment/Machines

- Diesel Vehicle - 1 No.

Materials/Components

- Cotton waste - as reqd
- Soap oil - as reqd
- Bleeding screw - as reqd
- Fuel hose - as reqd
- Fuel filter - as reqd
- Diesel - as reqd

PROCEDURE

TASK 1: **Air bleeding from diesel fuel system**

1 Park the vehicle on safe place and apply parking brake.

2 Identify the diesel fuel line circuit in a vehicle.

3 Check the fuel tank cap vent hole, if blocked open the vent hole of the cap.

4 Check the fuel tank fuel level.

5 Check the fuel quality and quantity in fuel tank.

6 Check fuel line connection joints and leakages in fuel lines before start bleeding.

7 Operate the hand priming pump till fuel/ pressure built up.

8 Loosen the fuel filter bleeding screw by one or two turns so that air can escape through the hole in the bleeding (Fig 1)

9 Tighten the bleeding screw (1) again.

10 Repeat the operation till the air in the system is fully dawn out in the filter.

11 Loosen the bleeding screw (1) at F.I.P.(5)by one or two turns so that air can escape through the hole from the bleeding screw.

12 Tighten the bleeding screw (1) again.

13 Ensure all fuel connections and bleeding screws are securely tighten.

14 Start the engine and the check to performance.

Fig 1

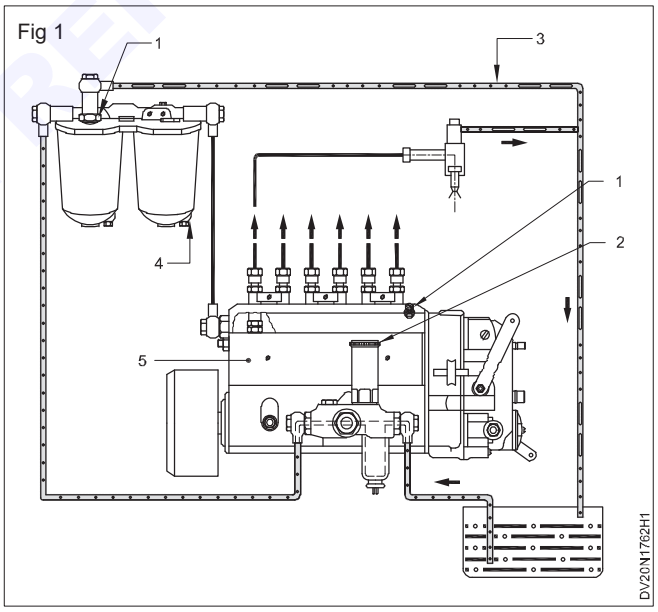

— — — — — —

TASK 2: **Air bleeding in CRDI diesel fuel system**

1 Park the vehicle on the plain surface hard ground.

2 Apply parking brake and wooden wheel chokes.

3 Open the vehicles bonnet cover.

4 Identify the CRDI diesel fuel circuit.

5 Check the fuel line for leaks or damages.

6 Check the fuel level in fuel tank.

7 Rectify all the fuel line defects before start bleeding the full line.

8 Ensure fuel pump is working properly.

9 Ensure fuel filter is cleaned or replaced.

10 Ensure water separator filter is replaced with new one or cleaned.

11 Ensure no fuel leaks in fuel line.

© NIMI NOT TO BE REPUBLISHED

12 Manually pump the diaphragm pump and loose the common rail fuel line connection to come out air with diesel fuel.

13 Continuously operate the pump until complete air has come out from CRDI fuel system (Fig1)

14 Ensure no air in the fuel system and then tighten the fuel line or air bleed screw with secondary filter.

15 Start the engine and run in idle speed.

Fig 1

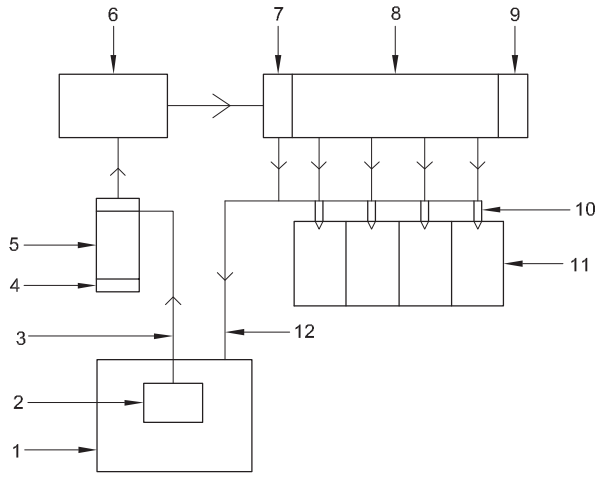

1. FUEL TANK
2. ELECTRICAL FUEL PUMP
3. FUEL SUPPLY LINE
4. WATER SEPARATOR
5. FUEL FILTER
6. HIGH PRESSURE FUEL PUMP (CRDI PUMP)
7. FUEL PRESSURE REGULATOR
8. COMMON RAIL
9. FUEL RAIL PRESSURE SENSOR
10. FUEL INJECTOR
11. ENGINE
12.FUEL RETURN LINE

DV20N1766H1

COMMON RAIL DIRECT INJECTION SYSTEM (CRDI) FUEL SUPPLY SYSTEM

© NIMI NOT TO BE REPUBLISHED

Practice to check and replace the wiper blades

Objectives: At the end of this exercise you shall be able to
- **check and replace the wiper blades.**

Requirements

Tools/Instruments
- Trainee's tool kit - 1 No.

Equipment/Machines
- Vehicle (LMV) - 1 No.

Materials/Components
- Cotton waste - as reqd
- Soap oil - as reqd
- Wiper blade - as reqd
- Wiper arm - as reqd

PROCEDURE

Check and replace the wiper blade of the vehicle

1 Park the vehicle on the plain surface.

2 Apply parking brake and wheel chokes.

3 Identify the wind shield wiper blades (front and rear)

4 Switch on the main ignition switch.

5 Clean the wind screen glass and spray water on the wind screen.

6 Check the wiper blade visually.

7 Switch on the wiper and check the wiper blade operation, switch off the switch.

8 Remove the wiper blade from the wiper arm.

9 Select the new wiper blade as standard quality.

10 Fix the new wiper blade with wiper (front and rear).

11 Ensure wiper blade is properly fitted with wiper arm.

12 Apply water spray on the wind screen and operate the wiper blade to clean the water and dust from the wind shield.

13 Ensure wiper blade is working properly (Fig 1).

Note: Don't operate the wiper blade without water spray on the wind screen.

Fig 1

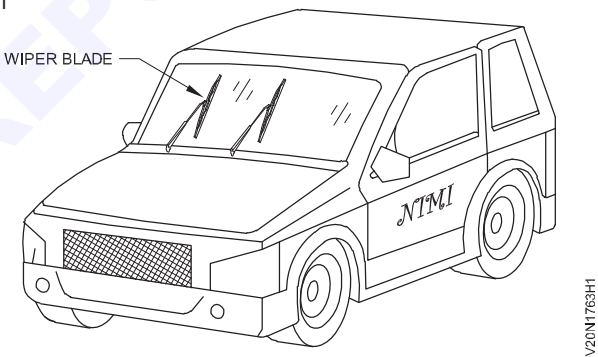

© NIMI NOT TO BE REPUBLISHED

Practice to check coolant reservoir tank and thermostat valve of vehicle cooling system

Objectives: At the end of this exercise you shall be able to
- **check coolant reservoir tank**
- **check the thermostat valve**
- **inspection of thermostat valve.**

Requirements

Tools/Instruments

• Trainee's tool kit	- 1 No.

Equipment/Machines

• Vehicle (LMV)	- 1 No.

Materials/Components

• Coolant	- as reqd
• Reservoir cap	- as reqd
• Cotton waste	- as reqd
• Soap oil	- as reqd
• Thermostat valve	- as reqd
• Coolant oil	- as reqd

PROCEDURE

TASK 1: **Checking coolant reservoir tank**

1 Park the vehicle on the hard plain surface ground.

2 Apply parking brake and wheel chokes in hill stations to avoid vehicle rolling over.

3 Open the bonnet cover of the vehicle.

4 Locate the radiator cap and twist it to open.

5 Look if water level is full in radiator, if yes the system is full and vehicle engine is ready to operate.

6 If radiator level is low, top up with manufacturers recommended coolant.

7 Place the funnel securely in the radiator mouth hole.

8 Add coolant until full, squeezing the radiator hoses could help to release any air in the system and help to fulfill the coolant into the radiator.

9 Replace the radiator cap, wipe up any drops on the radiator and close the bonnet.

Reservoir tank level checking

1 Identify the coolant overflow reservoir

2 Look for the water fill levels is low or full mark touching the reservoir coolant

3 If coolant level is low open the reservoir cap and place the funnel and fill the water with vehicle manufacturer recommended coolant and coolant oil ratio, fill the reservoir until the level reaches full.

4 If need replace water reservoir cap, wipe up any coolant spillage and close the hood and start the engine. (Fig 1)

Fig 1

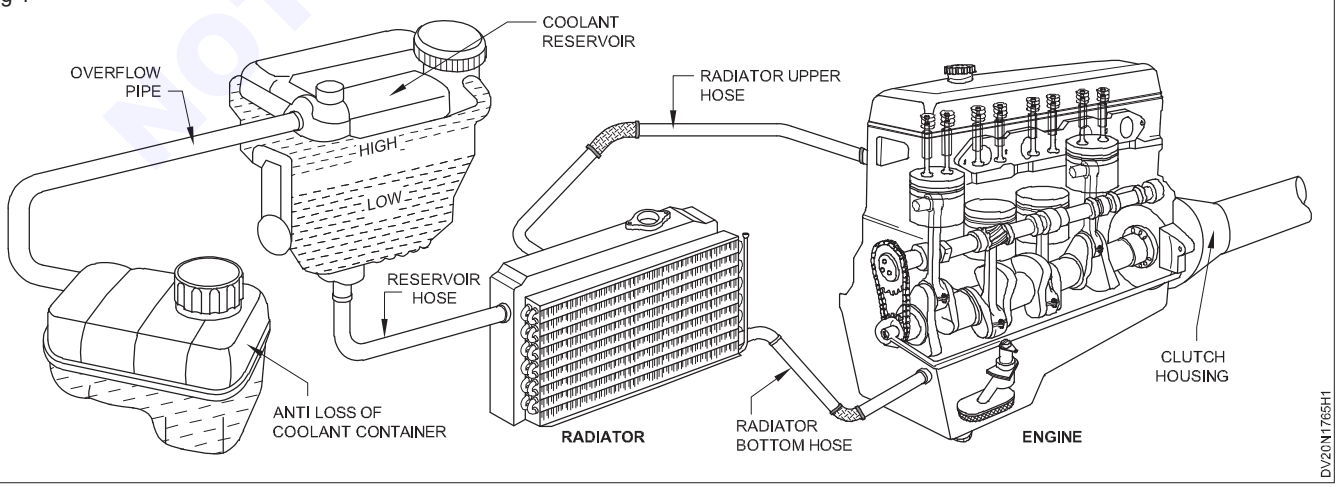

NOT TO BE REPUBLISHED © NIMI

TASK 2: **Check the function of thermostat valve**

1 Park the vehicle on the plain surface ground.

2 Apply parking brake while parking your vehicle in parking.

3 Check the water level in the radiator by removing radiator cap.

4 If the water is low, top up water level.

5 Start the engine and check the water circulation. Ensure thermostat valve is in closing position means no water circulation in radiator.

6 No water circulation in while starting the engine. After warming up the engine .water will be circulated by opening thermostat valve.

7 Observe the water circulation in the radiator upper tank.

— — — — — —

TASK 3: **Inspection of thermostat valve**

1 Remove the thermostat cover from the thermostat case.

2 Remove the thermostat valve.

3 Clean the thermostat valve cap.

4 Tie the thermostat valves collar with a thread.

5 Immerse the thermostat valve in water. Ensure that the thermostat valve(1)is fully merged in water but does not touch the walls or the base of the jar.

6 Heat up the water (Fig 1)

7 Note down the temperature at which the thermostat opens fully.

8 Remove the thermostat valve(1)from the water and measure the gap between the thermostat collar (2) and the shroud(3)

9 Compare the thermostat opening temperature, thermostat's opening (4) and the temperature at which the thermostat opens completely, with specifications given by the manufacturer. If any of these three observations do not math with the manufacturers specifications, then replace the thermostat (Fig 2)

10 Fit the thermostat in thermostat case.

11 Fit the thermostat cover in thermostat case.

Fig 1

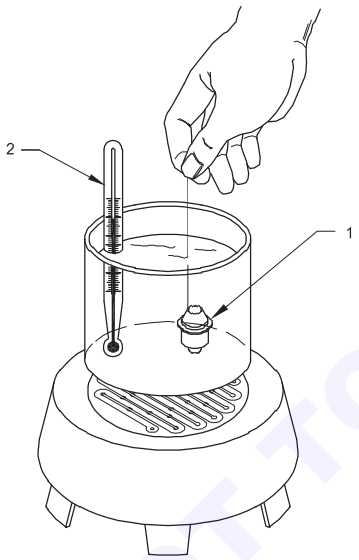

Fig 2

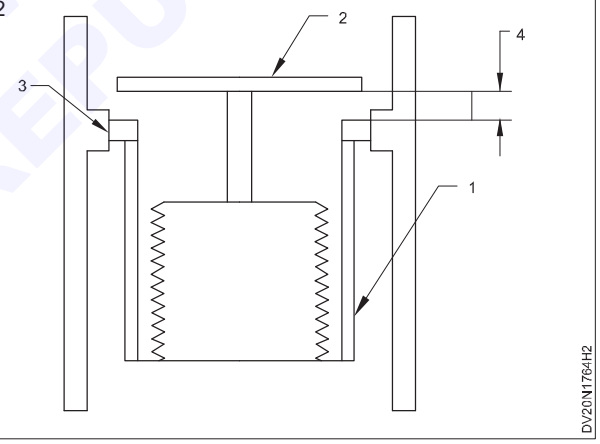

— — — — — —

© NIMI NOT TO BE REPUBLISHED

Practice on clean the air cleaner

Objectives: At the end of this exercise you shall be able to
- **service dry type air cleaner**
- **service oil bath type air cleaner.**

Requirements

Tools/Instruments		Materials/Components	
• Trainee's tool kit	- 1 No.	• Cotton waste	- as reqd
Equipment/Machines		• Soap oil	- as reqd
		• Lube oil	- as reqd
• Vehicle (LMV)	- 1 No.	• Air cleaner filter	- as reqd

PROCEDURE

TASK 1: **Servicing the dry type air cleaner**

1 Park the vehicle on the hard surface.

2 Apply parking brake and wooden chokes to the wheels.

3 Open the bonnet.

4 Unscrew the bolt or wing-nut (!)of the air cleaner with the help of a spanner or plier(Fig 1)

Fig 1

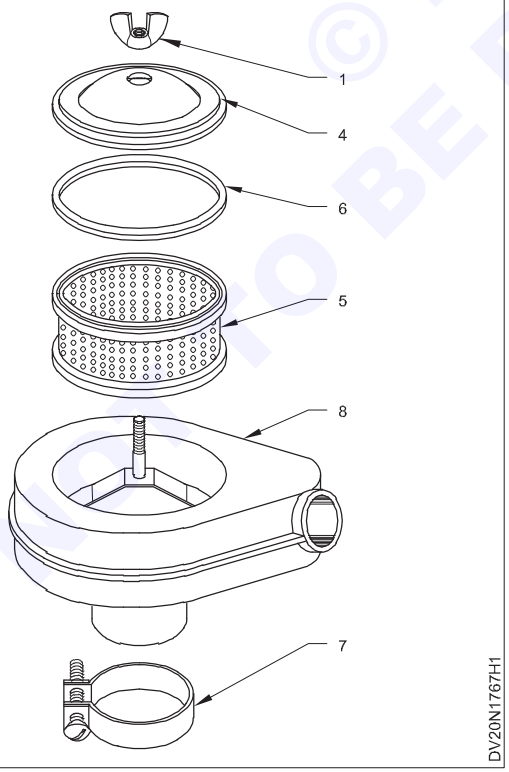

5 Remove the top cover (4)with the filter element(5) and gasket(6).

6 Loosen the nuts/ fixing clip (7)fixing the air cleaner on the inlet manifold.

7 Remove the bottom case (8)of the cleaner.

8 Clean the air cleaner housing and cover with cloth.

9 Inspect the filter element(5).If it is clogged, replace the same.

10 Blow the dust from inside element by compressed air.

11 If the element is dirty, wash it with a household type detergent.

12 After washing rinse the detergent out of the element and dry it completely.

13 Check visually the cleaned element (5)for puncture of damage. Discard if it is found punctured or damaged.

14 Check the plastic or rubber gasket ring(6)for smoothness which acts as a gasket.

15 Place the new or old element (5)in the lower housing(8).

16 Put the plastic gasket ring(6)on the element(5).

17 Put the top cover (4)on the element(5).

18 Tighten the wing-nut (1)with the help of the plier.

19 Test the air cleaner by starting the engine for smooth running.

— — — — — —

TASK 2: **Service air cleaner (oil bath type)**

1 Open the bonnet of the vehicle.

2 Unscrew the bolt or wing-nut (1)on the top cover(2) by hand or plier.(Fig 1)

© NIMI NOT TO BE REPUBLISHED

Fig 1

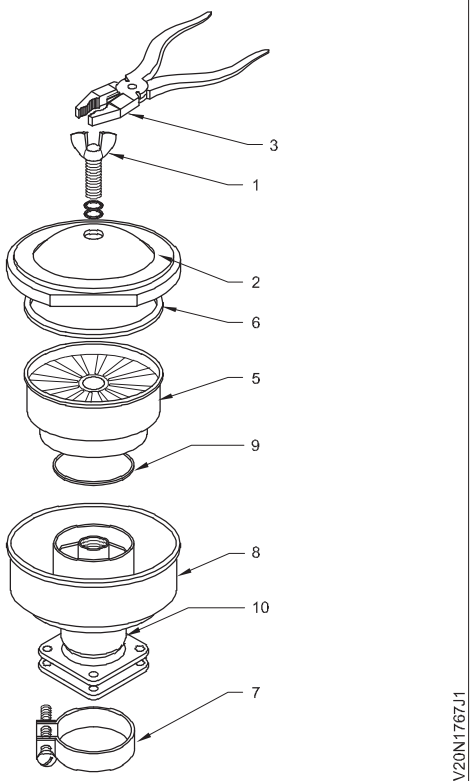

3 Remove the top cover (2) with the element (5) and the gaskets (6&9).

4 Loosen the nuts/ fixing clip (7) of the lower portion (10) of the air cleaner.

5 Remove the bowl from (8) from the inlet manifold or carburetor.

6 Drain the oil from the bowl (8) and then clean the sludge.

7 Using the piece of cardboard, block the opening of the air intake on the inlet manifold / carburettor to avoid entry of foreign material.

8 Pour a little diesel/ kerosene over the air cleaner element (5).Hold it in vertical position .Rotate and stir the element by hand until all the dust is absorbed by oil. Drain the used oil. Repeat the procedure until all the dust or dirt is removed from the wire mesh.

9 Blow compressed air under reduced pressure over the wire mesh from the opposite side and the dry element .

10 Clean the bottom case (bowl) (8) of the air cleaner with diesel/ kerosene and wipe with cloth.

11 Check the filter element and the wire mesh for damage and the clogging of dust .If damaged, replace with new one.

12 Check the gasket ring (6) and clean it ; if damaged replace the gasket ring.

13 Check the threads of top cover mounting bolts wing-nut (1).

14 Check air cleaner bowl (bottom case) for damage.

15 Mount the bowl (bottom portion) on the engine manifold or on the carburetor by the tightening the fixing nuts or bolts of the clip.

16 Refill the air cleaner bowl/ housing up the oil level mark with clean, recommended grade oil.

17 Place the gasket (9) and install the filter element (5) in the housing bowl(8).

18 Place the gasket ring (6) and fit the cover (2) by tightening wing-nut(1).

19 Start the engine and check the performance of the engine for smooth running.

© NIMI NOT TO BE PUBLISHED

Practice on cleaning of cooling motor

Objectives: At the end of this exercise you shall be able to
- **clean the cooling motor.**

Requirements

Tools/Instruments

• Trainee's tool kit	- 1 No.
• Multimeter	- 1 No.
• Cleaning tray	- 1 No.

Equipment/Machines

• Vehicle	- 1 No.
• Work bench	- 1 No.

Materials/Components

• Cotton waste	- as reqd
• Soap oil	- as reqd
• Bearing	- as reqd
• Grease	- as reqd

PROCEDURE

TASK 1: **Perform cleaning of cooling motor**

1 Select the vehicle for cleaning a cooling motor

2 Park the vehicle on the repair shop

3 Open the Engine bonnet cover

4 Trace the Engine cooling system and air in take system for radiator water cooling weather water pump fan cooling or ECU controlled electric motor cooling system

5 Trace the Engine water cooling system circuits and liquid cooling method

6 Trace the Radiator cooling fan wire connections

7 Start the Engine and let it allow to run in the speed until reach specified maximum limits

8 Check the Radiator cooling fans functions, weather fan is functioning at a specified temperature of radiator. If motor is start to function at specified limit of maximum limit of radiator temperature, it means cooling motor is working as per temperature sensor given signal to ECU and ECU give command to motor to act to run until Radiator temperature come, down to normal temperature.

9 When the radiator temperature come to below the specified limit ECU given command to motor run off.

10 If found any malfunctioning of cooling motor check the motors wire connection and temperature sensor wire connection and their functions

11 Check the sensor function with multimeter, if found defective, replace it with new one.

12 Check the ECU function

13 Check the fuse wire connection if found damaged replace it.

14 Check the sensor, fuse, ECU and wire connections are connected and functioning properly.

15 If the cooling motor wire connection is found loose connection tighten it

16 If motor is not functioning, disconnect the motor wire connection and motor mountings.

17 Remove the motor from mounting and place it on the work bench.

18 Check the motor stator and rotor wire connections

19 Check the motor bearings

20 Dismantle the motor and clean the motor parts

21 Inspect the motor parts, replace the damaged parts

22 Assemble the cooling fan and test with test bench

23 Ensure the motor is functioning properly after repair work

24 Fix the motor and connect the wire with motor

25 Start the vehicle and let it allow to idle run until engine radiator coolant comes up to specified upper heats limit and then check motor function

26 If motor is start to work, your repair work is successful.

27 Wait for until radiator water temperature comes down and cooling motor come turn off.

© NIMI NOT TO BE REPUBLISHED

Practice on vehicle emission test and adjustment of air fuel ratio

Objectives: At the end of this exercise you shall be able to
- **check the emission of petrol vehicle**
- **use of 4/5 gas analyser**
- **installation of 4/5 gas analyzer**
- **setup of instrument for measuring emission parameter**
- **perform leak test**
- **measure CO, HC, CO2, O2, X, AFR/NOx**
- **examine the result.**

Requirements

Tools/Instruments

• Trainee's tool kit	- 1 No.
• External techometer	- 1 No.

Equipment/Machines

• Diesel Vehicle	- 1 No.
• Vehicle petrol	- 1 No.
• Smoke tester	- 1 No.
• 4/5 gas analyzer	- 1 No.

Materials/Components

• Cotton waste	- as reqd
• Soap oil	- as reqd
• Petrol	- as reqd

PROCEDURE

TASK 1: **Emission testing of petrol vehicle**

1 Park the vehicle on the plain surface ground.

2 Apply parking brake and wooden wheel chokes.

3 Prepare the emission test kit.

4 Set the emission test kit with vehicle tail pipe as shown in (Fig1)

Fig 1

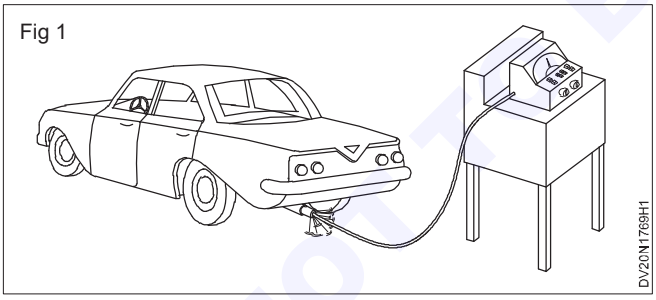

5 Refer the gas analyses data readings.

6 Before test the engine smoke ensure the following check to be sure.

7 Engine coolant temperature should be approximately 82°c (180°F)

8 Chock valve is full open position

9 All electrical accessories are out of service.

10 Engine ignition timing is within specified limit.

11 Fuel level in carburetor should be as per specification.

12 Air cleaner has been properly installed and it is in good condition.

13 Ensure engine valve clearance is with in specification

14 Start the engine and check the emission reading.

15 Adjust the idle speed by responding the idle speed screw.

16 Making sure that engine idles steady at specified limit by the vehicle manufacturers (around 900r.p.m)

17 If need adjust as per engine rpm needs. Generally idle mixture adjusting screw no need for adjustment.

18 If you are overhaul the carburetor, following adjustments are necessary.

- Tighten the idle mixture adjusting screw fully.
- Gradually loosen the idle mixture adjusting screw .
- Set the screw position, where the engine idle speed is the best idle.
- Adjust the air flow adjusting screw for fine idling.
- If need readjust the engine idling peed to 900rpm with idle speed adjusting screw.
- Check the CO % in exhaust smoke with the help of smoke tester.
- After fine setting the idle speed remove the smoke tester

Note: All vehicle manufacturers are delivered their product from the factory CO% is pre adjusted, to the following values.

© NIMI NOT TO BE REPUBLISHED

Engine idle mixture HC ppm	max 1200 ppm
engine idle mixture CO%	1.5± 0.5
Engine idle speed ppm	900±50

— — — — — —

TASK 2: **Installation of 4/5 gas analyzer**

Note: Safety instructions - This procedure applies to the product of 4/5 gas analyzer

This analyzer (Fig 1) is a equipment to measure the gas emission density of an Automotive enabling to diagnose the Automotive status and its preventive maintenance so that it can provide a function to prevent the air pollution in advance.

Fig 1

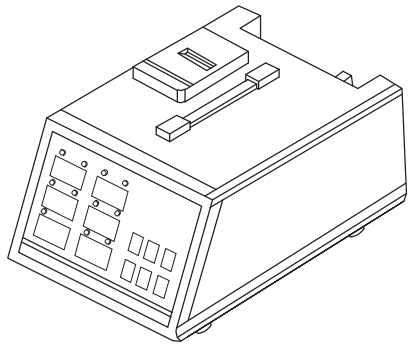

1 Fit end of the probe hose into the measuring probe and the other end of the hose into the gas inlet in the rear of the analyzer (Fig 2). If the fitting condition is not good and the air comes into flow from outside, it may yield an incorrect measured value. Therefore, please carefully verify the fitting condition before use.

Fig 2

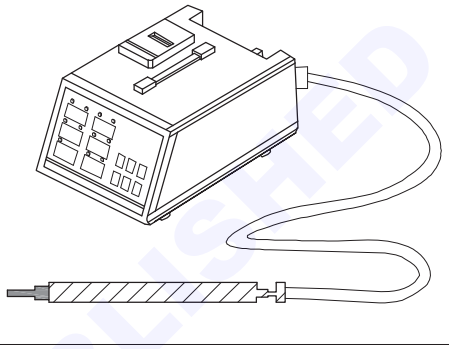

2 Turn off the power switch and then connect the power cable to the power socket located in the rear of the analyzer

3 Verify the fitting conditions of measuring probe filter and various filters located in the rear of the analyzer.

4 Verify again the connection status of the analyzer and then turn on the power switch.

— — — — — —

TASK 3: **Measurement**

Measurement Mode

1 Place the probe in the clean air to perform the [Zero calibration].

2 Push the probe deep into the exhaust outlet of the vehicle and measure exhaust gas by pressing measurement key (Fig 1 & 2).

Fig 1

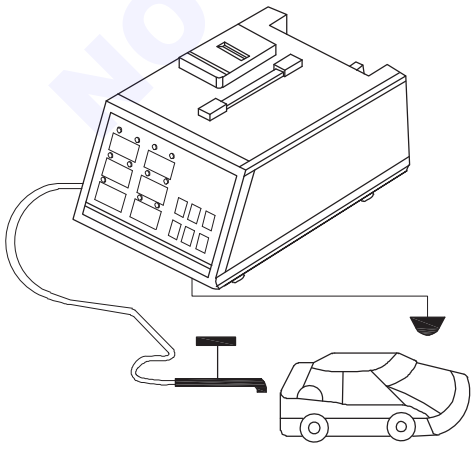

Fig 2

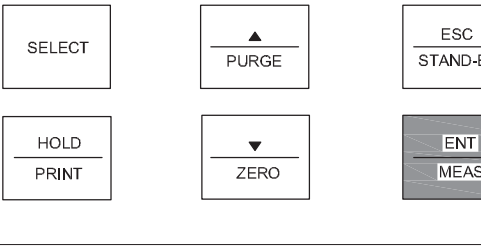

3 The measurement operates for 30 minutes and the pump is automatically stopped by the activation of the power-saving mode. Press MEAS (Macro Economic Application System) key again to measure the exhaust gas for more than 30 minutes.

4 Pull the probe out of the exhaust outlet of the vehicle. Then clean the inside of analyser with the clean air by pressing the PURGE key until the measurement values drop to 0. (Fig 1)

5 If all the measurements fall close to 0, press STAND-BY key to maintain instrument in a stand by mode.

6 Press the ZERO key for a series of measurement. Then, repeat 2,3 & 4.

© NIMI NOT TO BE REPUBLISHED

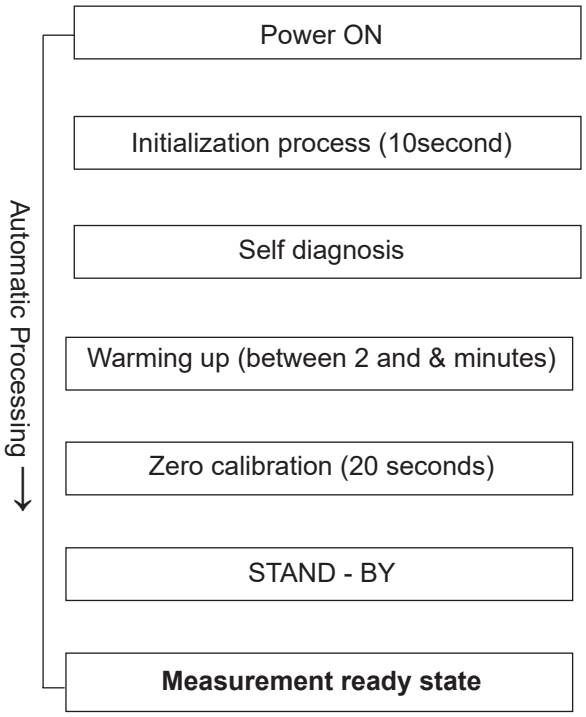

TASK 4: **Leak test**

A function that looks for any possible air leakage from the sample-cell in order to indicate the exact result

1 Press the SELECT key (Fig 1) once in the stand-by mode to select the Leak Test mode

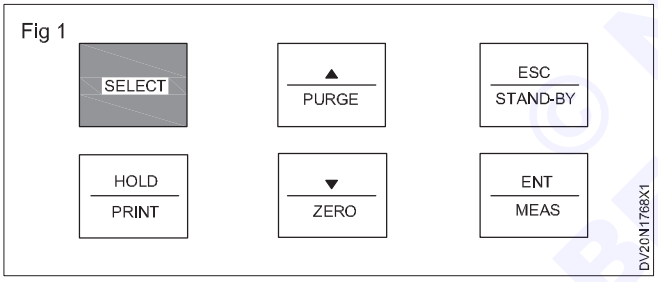

2 If the message 'Leak test' is indicated on the indication window as shown above (Fig 2) mount the leak test cap on the front side of the probe.

3 Press ENT key. The pump operates and the count values decrease by 1 from 20 during the 20-second leak test.



4 If the test turns out normal without any leak after 20 seconds, a message is indicated as 'PASS". If the leak is identified, the message is indicated as 'FAIL'.

TASK 5: **Selection of fuel**

1 This is the function that selects fuel for testing vehicle. It is used to calculate air surplus rate (?) and AFR. This analyzer can select the fuel such Gasoline, LPG, CNG, and Alcohol. (Fig 1)

2 Selected fuel is indicated as in the above. Use ▲, ▼, keys until it indicates the fuel to select.

3 Press ENT key to setup the selected fuel.

4 For Example, If the "LPG" fuel is selected, the window indicates as shown in the below (Fig 2)

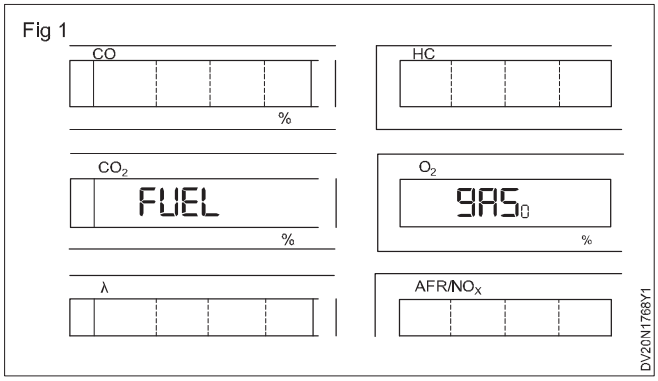

© NIMI NOT TO BE REPUBLISHED

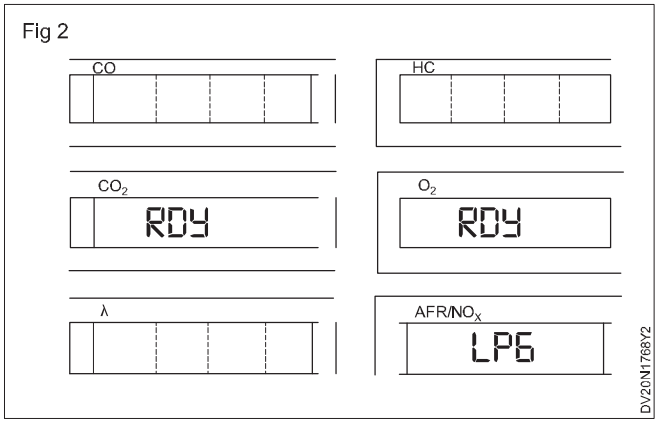

TASK 6: **NO_x setup**

It is a function selecting where to attach NOX sensor.

1 Press select key for eight times in standby mode

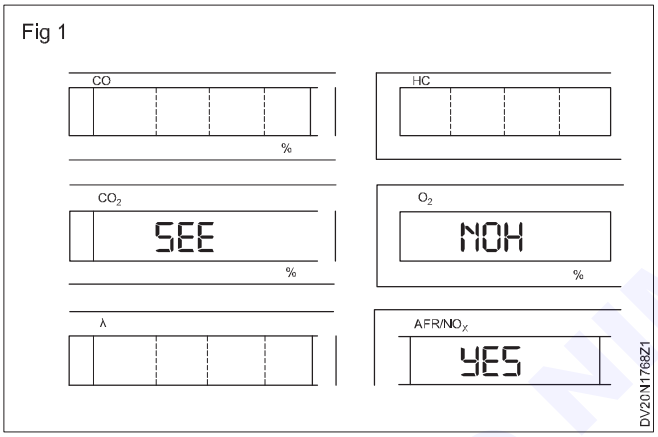

2 ▲ key changes display to YES or to NO.

3 Select YES for NOX display mode (Fig 1), NO for non-NOX display mode, then press ENT

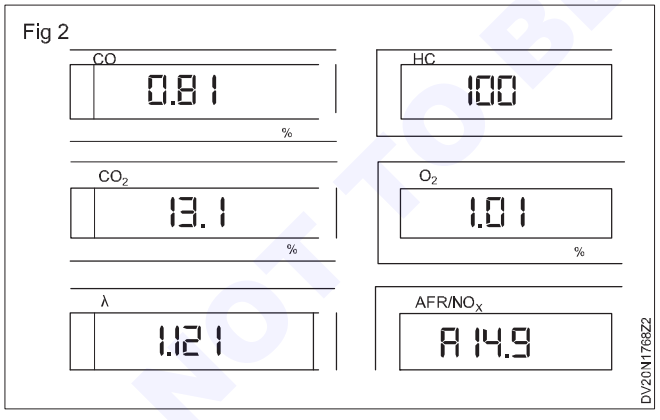

4 "A" is attached as shown below (Fig 2) in the AFR(Air/ fuel rate) display mode and disappears in the NOx display mode. NOx/AFR mode is changed as the ENT key is pressed in measurement mode.

By measuring NOx, CO2, and O2, in addition to HC and CO a mechanic gets a better look at the efficiency of the engine (Fig 3). Maximum limits for the measures gases are set by regulation according to Euro and BS standards. It is always desirable to have low amounts of four of five measured gases at all engine speeds.

The readings of the chemicals in the exhaust can lead the Technician to the cause of a drive-ability problem.

	IDLE	**2500 RPM**	**Probable cause**
HC ppm CO% CO_2 O_2 NO_xppm	0-150 1-15 10-12 0.5-2.0 100-300	0-75 0.0.8 11-13 0.5-1.25 200-1,000	Normal reading
HC ppm CO% CO_2% O_2% NO_x ppm	0-150 .30+ 8-10 0-0.5 0-200	0-75 3.0+ 9-11 0-0.5 100-500	Rich Mixture
HC ppm CO% CO_2% O_2% NO_x ppm	0-150 0-1.0 8-10 1.5-3.0 300-1,000	0-75 0-0.25 11 1.0-2.0 1,000+	Lean Mixture
HC ppm CO% CO_2% O_2% NO_x ppm	50-850 0-0.3 5-9 4-9 300-1000	50-750 0-0.3 6-10 2-7 1,000+	Lean Misfire
HC ppm CO% CO_2% O_2% NO_x ppm	50-850 0.1-1.5 6-8 4-12 0-200	50-750 0-0.8 8-10 4-12 100-500	Misfire

© NIMI NOT TO BE REPUBLISHED

Practice to check the air conditioner and heater unit

Objectives: At the end of this exercise you shall be able to
- **trace the air conditioner components fitted in the car AC circuit**
- **check the air conditioner and heater unit.**

Requirements

Tools/Instruments

- Trainee's tool kit - 1 No.
- Owner's manual - 1 No.

Equipment/Machines

- AC vehicle (LMV) - 1 No.

Materials/Components

- Cotton waste - as reqd
- Soap oil - as reqd

PROCEDURE

Identify all HVAC components of motor car (Fig1)

Fig 1

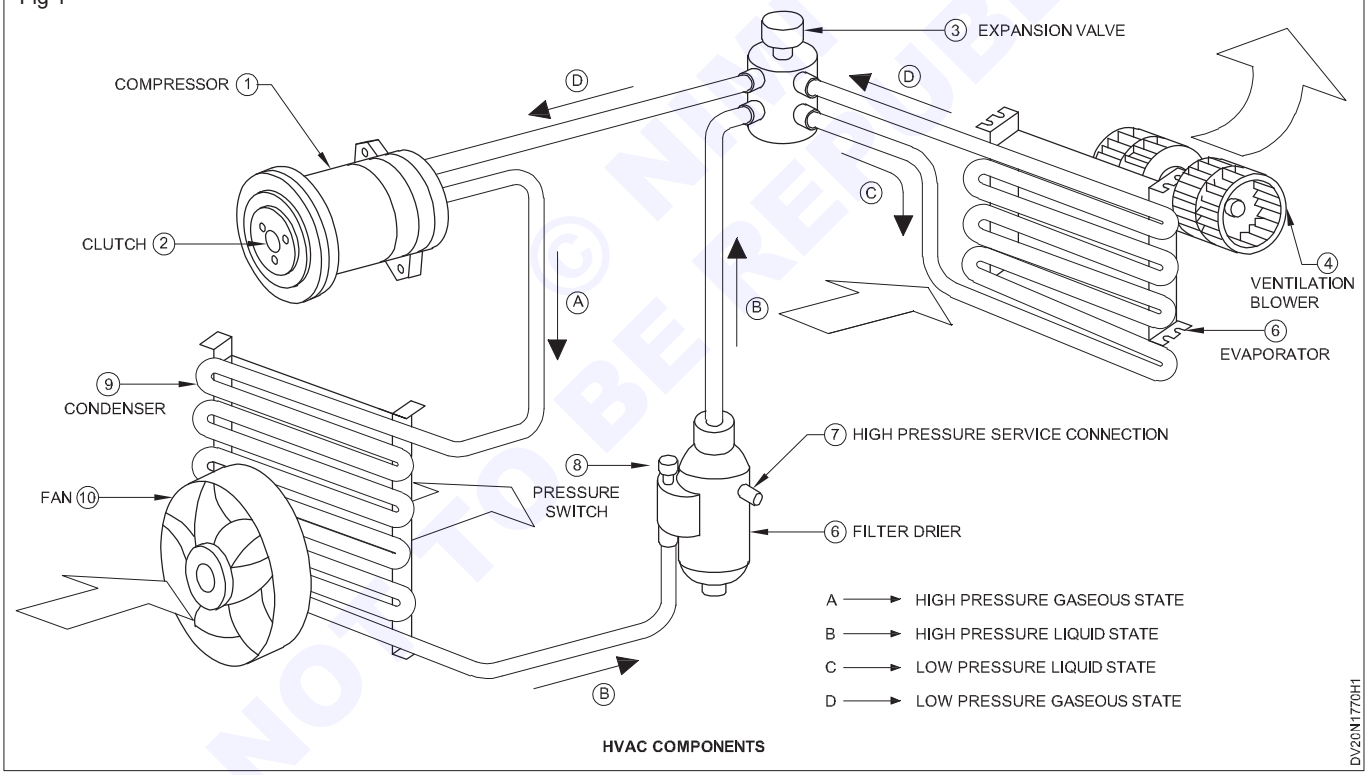

1 Park the vehicle in shop floor and neutral the gear with emergency brake set.

2 Raise the hood and disconnect the negative battery cable.

3 Locate the compressor (1)and supporting device

4 Identify the compressor clutch (2)

5 Locate the expansion valve (3) and its supporting device.

6 Locate ventilation blower(4) and its support system.

7 Locate filter drier(6)

8 Locate high pressure service connections.

9 Locate the pressure switch (8)

10 Locate the condenser (9)

11 Locate fan (10).

12 High pressure pipe in gaseous state(A).

13 High pressure pipe connection in liquid state(B)

14 Low pressure pipe connections (7) in liquid state (C)

15 Low pressure pipe in gaseous state (D).

© NIMI NOT TO BE REPUBLISHED

Performance test on A/C unit

1 Install manifold gauge set.

a Close high pressure and low pressure hose to the discharge service valve of the compressor .

b Connect the high pressure hose to the discharge service valve of the compressor.

d Run the engine and operate the car AC.

e Set the blower switch with at the high speed in AC on temperature control at cool and air flow control at vent.

f Keep all windows glass open.

g Position the thermometer bulb in cool air outlet (supply grill outlet)

h Place psychomotor close to the inlet of the cooling unit (place the psychomotor near the cool air outlet)

2 Wait until A/C system stabilizes (for about 20 to 30 minutes)

a Check that the reading on high pressure gauge is 14.0 to 15,5 kg/ cm² (200 to 230PSI) If the reading is too high pour water on the condenser.

b Check the reading on the dry bulb thermometer at the air inlet is 25-35o C(77-95F)

3 Check the performance of the air conditioning system

a Compare the dry bulb and wet temperature with psychomotor chart and dry bulb readings of the psychomotor at the air inlet.

After measuring the temperature of the wet and dry bulb thermometer at the evaporator air inlet relative air humidity percentage can be obtained .Eg. supporting dry and wet bulb temperature at evaporator air inlets are 25oC(77o F) and 19.5oC (67oF)respectively .The point of inter section of the dotted lines in the graphic is 60%.

b Measure the dry bulb temperature at cool air out let and calculate the difference between inlet dry bulb and outlet bulb temperature.

c Check the inter section of the relative humidity and the temperature difference between two hatched lines.

4 Checking the AC heating system- Check the battery condition.

- Check the fuse connection.
- Check the heater relay switch and wire connections
- Check the hot water circulation coil and blower rotation →
- Check the blower motor mountings and wire connections.
- Check the blower switch.
- Check the heater coil and the thermometer .
- Malfunctioning of this heating system should be checked according to this diagram.

Battery → Fuse → Heater relay → Blower motor → Blower switch

Cause for blower motor does not turn on

- Broken wiring between battery positive terminals and blower unit.
- Broken wire harmless.
- Broken ignition circuit.
- Loose or disconnected connection.
- Blown out fuse.
- Broken thermo switch circuit.
- Broken heat mode switch circuit
- Broken blower resistor
- Broken power circuit.
- Improper body grounding.
- Defection blower resistor.

5 Check the compressor mountings.

- Check the compressor driven belt tension and condition.
- Check the magnetic clutch operation.
- Check the oil level and vacuum creation in the compressor.
- Start the engine and check the compressor rotation.
- Check the noise from the compressor during compressor operation if found and if found an noise rectify it.
- Check the inlet and outlet hose connections.
- Check the compressor maximum refrigerant pressure at 100°C.
- Check the compressor's rotation in idle and high speed of the engine.
- Run the vehicle at 1500 RPM and record the cooling ratio.

6 Check the air gab

Clutch hub removal

- Remove the magnetic clutch retaining ring or nut.
- Attach the tool to the end plate by threading the outer nut of the tool into the central hole of the clutch plate.
- Tighten the inner tool arbor against the end of the compressor shaft to lift the plate.

Tech Tip : proper air gab between the clutch pulley and hub armature is critical to compressor overall performance failure to maintain the proper spacing as indicated in the service manual. Specification can lead to problems such as clutch burning or slippage.

© NIMI NOT TO BE REPUBLISHED

Clutch hub installation

- Position the shaft key in place.
- Slide the clutch hub on the shaft of the compressor. Be careful not to damage the components by using excessive force.
- Thread the inner part of the tool on to the shaft. Tighten the outer nut of the tool to push the shaft key.
- Set the air by use of feeler gauge . Add or remove shims to obtain the manufacturer's specification.
- Always set at the minimum number and measure at multiple points around the circumference.
- Reinstall the retaining or nut.
- Check oil level and rotate the hub with the hose of the compressor down to help lubricate. Check the case of the compressor.

— — — — — —

© NIMI
NOT TO BE REPUBLISHED

Practice on using the different types of vehicle jacks

Objectives: At the end of this exercise you shall be able to
- **use the different types of vehicle jacks.**

Requirements

Tools/Instruments

• Trainee's tool kit	- 1 No.
• Jacks	- as reqd

Equipment/Machines

• Vehicle	- 1 No.

Materials/Components

• Cotton waste	- as reqd
• Soap oil	- as reqd

PROCEDURE

Using different types of vehicle jacks

1 Park the vehicle on level ground and apply the parking brake.

2 In case of jacking up the front axle, chock the rear wheels and vice versa.

3 Check the free movements of threads in a mechanical jack (Fig 2,4).

4 Check the hydraulic jack oil level and its operations .

5 Place the jack under the vehicle in the specified space.

6 Rotate the screw and gradually with the jack lever and lift the vehicle in case of hydraulic jack move the jack's lever slowly so that the axle jacks up without jerk.

7 Place the jack stand under the specified place.

8 Lower down the jack and remove it.

9 After completing the specified job jack up again.

10 Remove the support / horses.

11 Lower down the jack and remove it.

Safety

- Never work under a vehicle supported by a floor jack.
- Lift saddles must be properly located in secured contact.
- Always check for the equipments , parts or personnel between the car before lowering.

Mechanical jack (Fig 1)/Hydraulic jack (Fig 2)

Fig 1

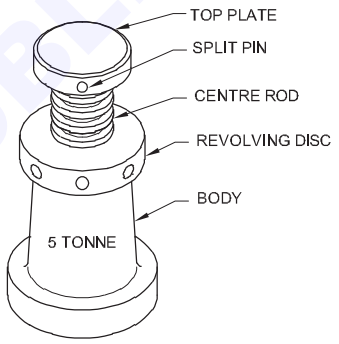

MECHANICAL JACK

Fig 2

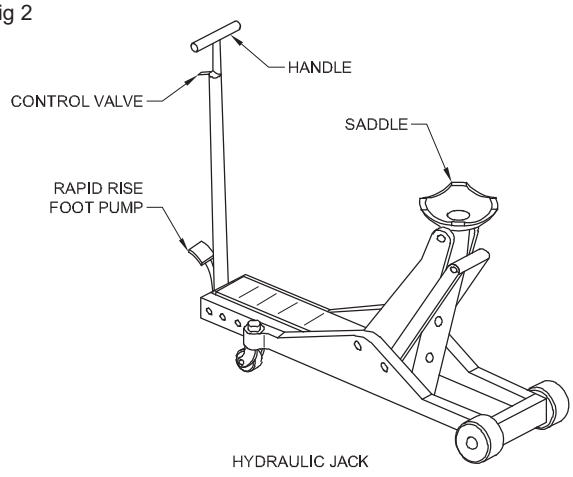

HYDRAULIC JACK

© NIMI NOT TO BE REPUBLISHED

Jack stand (Fig 3)

- The height of the jack stand is adjusted by the ratchet bottle adjustment.
- Stands must be properly and securely placed.

Fig 3

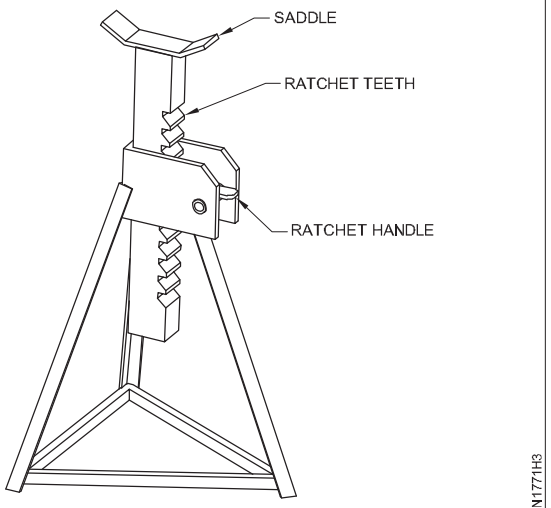

TYPICAL ADJUSTABLE JACK STAND

Bottle hydraulic jack (Fig 4)

- Bottle hydraulic jack is operated by hand lever to pump the hydraulic oil inside the jack.

Fig 4

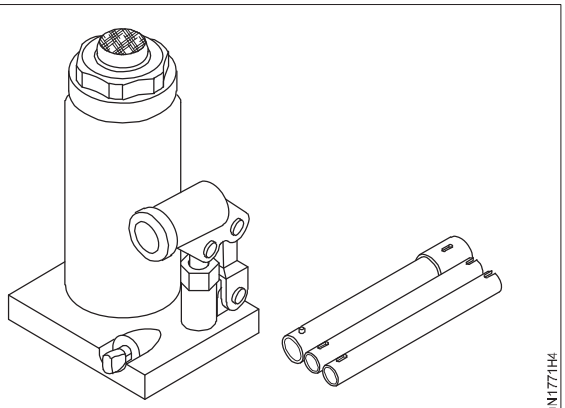

HYDRAULIC JACK

- Tighten the pressure release valve.
- Place the jack under vehicle axle.
- Operate the jack with hand lever to fiuldup the hydraulic oil pressure inside the jack to lift the jack piston.
- After jack up the vehicle place the jack stand under the axle.
- Release the pressure release valve and remove the jack from the vehicle.

© NIMI NOT TO BE REPUBLISHED

Practice on using the vehicle hand tool kit

Objectives: At the end of this exercise you shall be able to
- **use the vehicle hand tool kit.**

Requirements

Tools/Instruments

- Trainee's tool kit - 1 No.
- Vehicle emergency kit - 1 Set.

Equipment/Machines

- Vehicle (LMV) - 1 No.

Materials/Components

- Cotton waste - as reqd
- Soap oil - as reqd

PROCEDURE

Using the vehicle hand kit

S. No	Tools name	Use of the tool	Tools figure
1	Jack	Lift the vehicle	
2	Wheel spanner	Loose and tighten the nuts	
3	Tyre lever	Remove the tyre	
4	Hammer	Hammering on the objects	
5	Screw	Open and tighten the screw	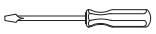
6	Jack stand	Hold the vehicle on stand	
7	Multi grip tool	Open and tighten the round nuts	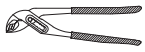
8	Automotive diagnostic tool OBD scanner	Diagonize the engine defects	
9	Align key	Loosen and tighten the hexagonal nuts	
10	Double end spanner	Open and tighten nuts and bolts	
11	Ring spanner	Loosen and tighten the nuts and bolts	
12	Philip screw driver	Open and tighten the screw	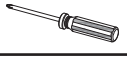

© NIMI NOT TO BE REPUBLISHED

S. No	Tools name	Use of the tool	Tools figure
13	Adjustable wrench	Loosen and tighten various size nuts and bolts	
14	4 Way lug wrench	Open and tighten wheel nuts	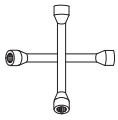
15	Chain wrench	Loosen ad tighten round shape nuts and bolts	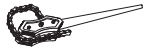
16	Impact wrench	Loosen and tighten nuts and bolts	
17	Nose plier	Remove and fix the lock rings	
18	Cutting plier	Used to cut wires and gribing round object	
19	Emergency light	Repair work at night.	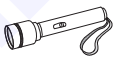

© NIMI NOT TO BE REPUBLISHED