AERONAUTICAL STRUCTURE & EQUIPMENT FITTER

NSQF LEVEL - 4

2nd Year

TRADE THEORY

SECTOR : CAPITAL GOODS AND MANUFACTURING

(As per revised syllabus July 2022 - 1200 Hrs)

© NIMI
NOT TO BE REPUBLISHED

Directorate General of Training

DIRECTORATE GENERAL OF TRAINING
MINISTRY OF SKILL DEVELOPMENT & ENTREPRENEURSHIP
GOVERNMENT OF INDIA

NATIONAL INSTRUCTIONAL MEDIA INSTITUTE, CHENNAI

Post Box No. 3142, CTI Campus, Guindy, Chennai - 600 032

Sector : Capital Goods and Manufacturing

Duration : 2 - Years

Trades : Aeronautical Structure & Equipment Fitter - 2nd Year Trade Theory - NSQF Level - 4 (Revised 2022)

Developed & Published by

National Instructional Media Institute
Post Box No.3142
Guindy, Chennai - 600 032
INDIA
Email: chennai-nimi@nic.in
Website: www.nimi.gov.in

Copyright © 2021 National Instructional Media Institute, Chennai

First Edition: March 2023 Copies : 500

Rs.285/-

© NIMI
NOT TO BE REPUBLISHED

FOREWORD

The Government of India has set an ambitious target of imparting skills to 30 crores people, one out of every four Indians, by 2020 to help them secure jobs as part of the National Skills Development Policy. Industrial Training Institutes (ITIs) play a vital role in this process especially in terms of providing skilled manpower. Keeping this in mind, and for providing the current industry relevant skill training to Trainees, ITI syllabus has been recently updated with the help of Media Development Committee members of various stakeholders viz. Industries, Entrepreneurs, Academicians and representatives from ITIs.

The National Instructional Media Institute (NIMI), Chennai, has now come up with instructional material to suit the revised curriculum for **Aeronautical Structure & Equipment Fitter - Trade Theory - 2nd Year - NSQF Level - 4 (Revised 2022)** in **Capital Goods and Manufacturing Sector** under Yearly Pattern. The NSQF Level - 4 (Revised 2022) Trade Practical will help the trainees to get an international equivalency standard where their skill proficiency and competency will be duly recognized across the globe and this will also increase the scope of recognition of prior learning. NSQF Level - 4 (Revised 2022) trainees will also get the opportunities to promote life long learning and skill development. I have no doubt that with NSQF Level - 4 (Revised 2022) the trainers and trainees of ITIs, and all stakeholders will derive maximum benefits from these Instructional Media Packages IMPs and that NIMI's effort will go a long way in improving the quality of Vocational training in the country.

The Executive Director & Staff of NIMI and members of Media Development Committee deserve appreciation for their contribution in bringing out this publication.

Jai Hind

Directorate General of Training
Ministry of Skill Development & Entrepreneruship
Government of India.

New Delhi - 110 001

© NIMI
NOT TO BE REPUBLISHED

PREFACE

The National Instructional Media Institute (NIMI) was established in 1986 at Chennai by then Directorate General of Employment and Training (D.G.E & T), Ministry of Labour and Employment, (now under Directorate General of Training, Ministry of Skill Development and Entrepreneurship) Government of India, with technical assistance from the Govt. of Federal Republic of Germany. The prime objective of this Institute is to develop and provide instructional materials for various trades as per the prescribed syllabi under the Craftsman and Apprenticeship Training Schemes.

The instructional materials are created keeping in mind, the main objective of Vocational Training under NCVT/NAC in India, which is to help an individual to master skills to do a job. The instructional materials are generated in the form of Instructional Media Packages (IMPs). An IMP consists of Theory book, Practical book, Test and Assignment book, Instructor Guide, Audio Visual Aid (Wall charts and Transparencies) and other support materials.

The trade practical book consists of series of exercises to be completed by the trainees in the workshop. These exercises are designed to ensure that all the skills in the prescribed syllabus are covered. The trade theory book provides related theoretical knowledge required to enable the trainee to do a job. The test and assignments will enable the instructor to give assignments for the evaluation of the performance of a trainee. The wall charts and transparencies are unique, as they not only help the instructor to effectively present a topic but also help him to assess the trainee's understanding. The instructor guide enables the instructor to plan his schedule of instruction, plan the raw material requirements, day to day lessons and demonstrations.

In order to perform the skills in a productive manner instructional videos are embedded in QR code of the exercise in this instructional material so as to integrate the skill learning with the procedural practical steps given in the exercise.The instructional videos will improve the quality of standard on practical training and will motivate the trainees to focus and perform the skill seamlessly.

IMPs also deals with the complex skills required to be developed for effective team work. Necessary care has also been taken to include important skill areas of allied trades as prescribed in the syllabus.

The availability of a complete Instructional Media Package in an institute helps both the trainer and management to impart effective training.

The IMPs are the outcome of collective efforts of the staff members of NIMI and the members of the Media Development Committees specially drawn from Public and Private sector industries, various training institutes under the Directorate General of Training (DGT), Government and Private ITIs.

NIMI would like to take this opportunity to convey sincere thanks to the Directors of Employment & Training of various State Governments, Training Departments of Industries both in the Public and Private sectors, Officers of DGT and DGT field institutes, proof readers, individual media developers and coordinators, but for whose active support NIMI would not have been able to bring out this materials.

Chennai - 600 032 **EXECUTIVE DIRECTOR**

© NIMI NOT TO BE REPUBLISHED

ACKNOWLEDGEMENT

National Instructional Media Institute (NIMI) sincerely acknowledges with thanks for the co-operation and contribution extended by the following Media Developers and their sponsoring organisation to bring out this IMP **(Trade Theory)** for the trade of **Aeronautical Structure & Equipment Fitter - 2nd Year - NSQF Level - 4 (Revised 2022)** under the **CG & M** Sector for ITIs.

MEDIA DEVELOPMENT COMMITTEE MEMBERS

Expert Name (Mr./Ms.)

Frederic Perez	-	Dassault Aviation Aerospace Company, Skill India
Christelle Carriere	-	Dassault Aviation. Aerospace Company, Skill India
Alain Doriath	-	Dassault Aviation Aerospace Company, Skill India
Guillaume Ancelin	-	Dassault Aviation. Aerospace Company, Skill India
Dominique Geay	-	Dassault Aviation. Aerospace Company, Skill India
Antoine Millet	-	Dassault Aviation. Aerospace Company, Skill India
Patrick Castan	-	Dassault Aviation. Aerospace Company, Skill India
Bruno Penot	-	Dassault Aviation. Aerospace Company, Skill India
Posina Venkata - Rao	-	Dassault Aviation. Aerospace Company, Skill India
Mayur S. Yaul	-	Dassault Aviation. Aerospace Company, Skill India
Julien Henry	-	Dassault Aviation. Aerospace Company, Skill India
Shri.M. Sampath	-	Training officer (Retd) CTI, Chennai - 32.

NIMI - COORDINATORS

Shri. Nirmalya Nath	-	Deputy Director, NIMI, Chennai - 32.
Shri. V. Gopalakrishnan	-	Manager NIMI, Chennai - 32.

NIMI records its appreciation of the Data Entry, CAD, DTP Operators for their excellent and devoted services in the process of development of this Instructional Material.

NIMI also acknowledges with thanks, the invaluable efforts rendered by all other staff who have contributed for the development of this Instructional Material.

NIMI is grateful to all others who have directly or indirectly helped in developing this IMP.

© NIMI NOT TO BE REPUBLISHED

INTRODUCTION

TTRADE PRACTICAL

The trade practical manual is intented to be used in workshop . It consists of a series of practical exercises to be completed by the trainees during the two years course of the **Aeronautical Structure & Equipment Fitter** in **Capital Goods & Manufacturing** trade supplemented and supported by instructions/ informations to assist in performing the exercises. These exercises are designed to ensure that all the skills in compliance with NSQF Level - 4 (Revised 2022)

This manual is divided into Six modules. The Six modules are given below

Module 1 - Manufacturing of Panel and Boxs

Module 2 - Equipment Fitting Mechanic

Module 3 - Wiring

Module 4 - Manufacturing

Module 5 - Mechanic

Module 6 - Electrical

The skill training in the shop floor is planned through a series of practical exercises centred around some practical project. However, there are few instances where the individual exercise does not form a part of project.

While developing the practical manual a sincere effort was made to prepare each exercise which will be easy to understand and carry out even by below average trainee. However the development team accept that there is a scope for further improvement. NIMI looks forward to the suggestions from the experienced training faculty for improving the manual.

TRADE THEORY

The manual of trade theory consists of theoretical information for the two years course of the **Fitter** in **Capital Goods & Manufacturing** Trade. The contents are sequenced according to the practical exercise contained in the manual on Trade Theory. Attempt has been made to relate the theoretical aspects with the skill covered in each exercise to the extent possible. This co-relation is maintained to help the trainees to develop the perceptional capabilities for performing the skills.

The trade theory has to be taught and learnt along with the corresponding exercise contained in the manual on trade practical. The indications about the corresponding practical exercises are given in every sheet of this manual.

It will be preferable to teach/learn the trade theory connected to each exercise at least one class before performing the related skills in the shop floor. The trade theory is to be treated as an integrated part of each exercise.

The material is not for the purpose of self learning and should be considered as supplementary to class room instruction.

© NIMI NOT TO BE REPUBLISHED

CONTENTS

Exercise No.	Title of the exercise	Learning Outcome	Page No.
	Module 1 : Manufacturing of Panel and Boxs		
2.1.43	Heat treatment and advantages		1
2.1.44	Manufacturing processes for metallic materials	1	3
2.1.45	Sealant removal		6
2.1.46	Composite materials overview	2,3	7
2.1.47 - 48	Sandwich materials		14
2.1.49 - 50	Drilling composite materials	4,5	16
2.1.51 - 52	Structural fasteners - overview		20
2.1.53	International aviation legislation		42
2.1.54 - 56	Aircraft description: ATA standard and ATA list		49
	Module 2 : Equipment Fitting Mechanic		
2.2.57 - 60	Common damages on pipes		78
2.2.61	Air conditioning system – ATA21 – Brief description	6,7	85
2.2.62	Pipes jointing techniques		98
2.2.63 - 66	Pipes – Bounding and grounding	8	107
2.2.67	Fire detection system - Bi-metallic strips and Graviner		111
2.2.68	Locking techniques		112
	Module 3 : Wiring		
2.3.69 - 70	Documentation to wiring practices	8	117
	Module 4 : Manufacturing		
2.4.71	Corrosion: Definition and forms of corrosion		128
2.4.72	Physical properties of aluminium alloys	9,10	134
2.4.73 - 74	PR sealant types, uses storage		146
2.4.75	Corrosion reworking	11	148
2.4.76	Non-Destructive Testing (NDT)		151
	Module 5 : Mechanic		
2.5.77	Flight controls chain		154
2.5.78-80	Hydraulic system - Description and components	12,13	158
2.5.81-83	Pneumatic system - Description and components	14,15	164
2.5.84-89	Oxygen system - Safety	16	169
	Module 6 : Electrical		
2.6.90	Wires and cables - Cutting and cutting defects		170
2.6.91 & 92	Stripping - Basics rules	17,18	176
2.6.93	Aeronautical shielded cables		179
2.6.94	Crimping tools		185
2.6.95	Insertion and extraction tools		204
2.6.96	Circular connectors		207
2.6.97	Electrical diagram reading		213
2.6.98	Attaching parts for harness		215

NOT TO BE REPUBLISHED © NIMI

LEARNING / ASSESSABLE OUTCOME

On completion of this book you shall be able to

S.No.	Learning Outcome	Ref.Ex.No
1	Perform coating and validation of coating PR sealant application on a manufactured closed box. AAS/N9410	2.1.43 - 45
2	Perform monolithic panel in plain weave composite material,Glass Fibre, unidirectional carbon fibre by wet lay-up. AAS N9411	2.1.46 - 48
3	Perform operations of drilling on composite material, Carbon (Unidirectional) and Glass Fibre (plain weave). AAS/N1602	2.1.49 - 50
4	Produce composite riveted components using different thicknesses of Carbon Fibre and different types of rivets. AAS/N1602	2.1.51 - 53
5	Manufacture composite open and closed riveted box using different types of metal and composite materials AAS/N9412	2.1.54 - 56
6	Prepare the task, the corresponding material and tools for Equipment fitting (Aircraft Systems) by using and processing technical documentation related and standard practices. AAS/N1602	2.2.57 - 58
7	Identify the aircraft systems assembly phases and mechanical assembly knowing the operation of the different aircraft systems: Hydraulic, Pneumatic, Fuel, Oxygen and Flight control. AAS N9413	2.2.59 - 62
8	Perform pipe fitting assembly by different operations using standard tools and check for specified accuracy [Metallic pipes, composite ducts and flexible hoses].AAS/N9414	2.2.63- 2.3.66
9	Prepare the task, the corresponding material and tools for Equipment fitting by using and processing technical documentation and standard practices AAS/N1602	2.4.67- 70
10	Perform surface treatment, Heat treatment and touch-ups on manufactured metal parts. AAS/N9415	2.4.71 - 74
11	Perform corrosion treatment and NDT by observing standard procedure. AAS/N1803	2.4.75-76
12	Plan, dismantle, and assemble different mechanical components used for full mechanical flight control chain AAS/N1607	2.5.77
13	Plan, dismantle, and assemble different Hydraulic \ components used for full Hydraulic system and Performpipe routing inspections and leak tests.	2.5.78 - 80
14	Plan, dismantle, and assemble different Pneumatic components used for full Pneumatic system and Perform pipe routing inspections and leak tests.	2.5.81 - 82
15	Plan, dismantle, and assemble different Oxygen components used for full Oxygen system and Perform pipe routing inspections and leak tests. AAS/N1605	2.5.83 - 86
16	Plan, dismantle, and assemble different Fuel components used for full Fuel system and Perform pipe routing inspections and leak tests. AAS/N1608	2.5.87 - 1.5.89
17	Join cables to build a harness and Insertion and extraction on different types of connector terminations by using the appropriate tools AAS/N1609	2.6.90-93
18	Fit and install harness on different types of panels and structure elements and Perform basic electrical tests relative to connections and check compliance of harness building AAS/N1609	2.6.94-98

© NIMI NOT TO BE REPUBLISHED

SYLLABUS

Duration	Reference Learning Outcome	Professional Skills (Trade Practical) With Indicative Hours	Professional Knowledge (Trade Theory)
Professional Skill 42 Hrs; Professional Knowledge 12Hrs	Perform coating and validation of coating PR sealant application on a manufactured closed box. AAS/N9410	43. Coating PR sealant application: Perform PR sealant application by coating on a closed box with bended sheets: pickling, cleaning, PR mixing, rivets and rivets and fasteners covering. (21hrs)	English technical vocabulary related to the task. Heat treatment and advantages. PR sealant types, uses, curing, pot life, storage, care & maintenance. (06 hrs)
		44 Coating PR sealant application validation by performing a leak test of the closed wing profile by using a Schrader plug and compressed air: Appropriate Measuring Instrument. [Schrader plug and compressed air] 45 Removal PR sealant by performing: - Rivets and fasteners removal - Mastic removal by scraping - Surface cleaning. (21hrs)	English technical vocabulary related to the task. Manufacturing processes for metallic materials: molding, welding, forging, forging die, sheet metal work (bending, cutting, stamping, rolling), additive manufacturing PR sealant types, uses, curing, pot life, storage, care &maintenance. Manufacturing processes for metallic materials: molding, welding, forging, forging die, sheet metal work (bending, cutting, stamping, rolling), additive manufacturing. PR sealant removal operations and cleaning. (06 hrs)
Professional Skill 63 Hrs; Professional Knowledge 18 Hrs	Perform monolithic panel in plain weave composite material,Glass Fibre, unidirectional carbon fibre by wet lay-up. AAS N9411	46 Composite panel manufacturing N°1: Using GFRP (Glass Fibre Reinforced Polymer), sheet size 500 mm x 500 mm perform operations of: - Marking plies - Making Fibre orientation choice - Calculating resin ratio - Composite wet lay-up - Vacuum bag installation - Resin curing. (21hrs)	English technical vocabulary related to the task. Manufacturing processes for metallic materials: molding, welding, forging, forging die, sheet metal work (bending, cutting, stamping, rolling), additive manufacturing. Composite Fibre: types, conductivity, specific gravity, mechanical properties and uses. Resins types, conductivity, specific gravity, mechanical properties and uses. Composite Fibre orientation, different waves types, resin ratio calculation Composite manufacturing processes. (06 hrs)
		47`Composite panel manufacturing N°2: Using unidirectional CFRP (Carbon Fibre Reinforced Polymer), sheet size 500 mm x 500 mm perform operations of:-Making a thin panel by wet lay up - Making Fibre orientation choice - Calculating resin ratio - Composite lay-up - Vacuum film installation - Resin curing, (21hrs)	English technical vocabulary related to the task.Composite Material Science : properties -Physical & Mechanical, Fiber Types -Resin types, difference between CFRP, GFRP, AFRP, QFRP, different weaving types, manufacturing methods, resin ratio, curing, sandwich materials, different core materials, composite technical textile. Composite Fibre: types, conductivity, specific gravity, mechanical properties and uses.Resins types, conductivity, specific gravity, mechanical properties and uses.

© NIMI NOT TO BE REPUBLISHED

			Composite Fibre orientation, different waves types, resin ratio calculation. Composite manufacturing processes.(06hrs)
		48 Composite panel manufacturing N°3 : Using CFRP Carbon Fibre Reinforced Polymer), sheet size 500 mm x 500 mm, perform operations of: - Making a curved panel by wet lay-up - Making Fibre orientation choice - Calculating resin ratio - Composite lay-up - Vacuum film installation - Resin curing. (21hrs)	English technical vocabulary related to the task. Composite Material Science: properties - Physical & Mechanical, Fiber Types -Resin types, difference between CFRP, GFRP, AFRP, QFRP, different weaving types, manufacturing methods, resin ratio, curing, sandwich materials, different core materials, composite technical textile. Composite Fibre: types, conductivity, specific gravity, mechanical properties and uses.Resins types, conductivity, specific gravity, mechanical properties and uses. Composite Fibre orientation, different waves types, resin ratio calculation. Composite manufacturing processes.(06hrs)
Professional Skill 21 Hrs; Professional Knowledge 06 Hrs	Perform operations of drilling on composite material, Carbon (Unidirectional) and Glass Fibre (plain weave). AAS/N1602	49 Composite drilling: Using previous GFRP & CFRP, sheets size 500 mm x 500 mm, perform operations of: - Drilling, counter drilling Using hand drill machine - Countersinking - Temporary fitting 50 Composite sandwich manufacturing: Using previous CFRP, sheets size 500 mm x 500 mm, make a sandwich panel by performing operations of: - Tracing - Fibre orientation, resin ration calculation, composite lay-up, honeycomb cutting, vacuum bag, polymerization. Appropriate Measuring Instrument. [Tap test] (21hrs)	English technical vocabulary related to the task. Composite Material Science: properties - Physical & Mechanical, Fiber Types -Resin types, difference between CFRP, GFRP, AFRP, QFRP, different weaving types, manufacturing methods, resin ratio, curing, sandwich materials, different core materials, composite technical textile. Drill- material, types, parts and sizes for composite materials. Drill angle-cutting angle for different materials, cutting speed feed. R.P.M. for composite materials. Drilling composite materials handling and maintenance. Composite Material Science: properties - Physical & Mechanical, Fiber Types -Resin types, difference between CFRP, GFRP, AFRP, QFRP, different weaving types, manufacturing methods, resin ratio, curing, sandwich materials, different core materials, composite technical textile. Composite core, types, mechanical properties and uses. Sandwiches composites manufacturing processes, curing.(06hrs)
Professional Skill 42 Hrs; Professional Knowledge 12 Hrs	Produce composite riveted components using different thicknesses of Carbon Fibre and different types of rivets. AAS/N1602	51 Composite riveted installation: Using different thicknesses of CFRP and different types of rivets (LGP, Hi-lite, Cherry-max, Compos lock, etc.) perform operations of: - Drilling, Counter drilling, Countersinking Using hand drill machine - Deburring	English technical vocabulary related to the task. Sheet holders pins: material, construction, types, accuracy and uses. Perform riveting operations on composite structure, Rivet pull machine, care, maintenance, specification, description, types and their uses, method of using. Blind rivet specifications for composite installation, definition, types, sizes, materials, length calculation (06 hrs)

NOT TO BE REPUBLISHED © NIMI

		- Reaming - Temporary fitting - Rivets and fasteners fitting (LGP, Hi-lite, Cherry-max, etc.). Appropriate Measuring Instrument. [Rivet gauge, " GO no GO" gauge](21hrs)	
		52 Composite riveted installation: Using different thicknesses of multi materials (Aluminum, Titanium, CFRP, GRFP...) and different types of rivets and fasteners (LGP, Hi-lite, Cherryˆmax, Composi-lock, etc.) perform operations of: - Drilling, counter drilling, countersinking Using hand drill machine - Deburring - Reaming - Temporary fitting - Rivets and rivets and fasteners fitting (LGP, Hiˆlite, Cherry-max, etc.) Appropriate Measuring Instrument. [Rivet gauge, " GO no GO" gauge] 53 Rivets and fasteners removal: Using Metallic and composite assembly perform rivets and fasteners removals on the composite component by manual drilling and use of punch tool and pin drift.(21hrs)	English technical vocabulary related to the task. Sheet holders pins: material, construction, types, accuracy and uses. Composite metallic assembly specification. Blind rivet and specific fasteners specifications for composite and metallic installation, definition, types, sizes, materials, length calculation. Blind Rivet and other fasteners definition, types, sizes, removal operations. Aviation Legislation: International Aviation legislation: Chicago Convention and the role of the International Civil Aviation Organization. Directorate General of Civil Aviation: India safety policy, Structure of the aviation regulatory framework, relationship between CAR-21, CAR-M, CAR-145, CAR-147. General description of CAR 21 and the importance of applying Airworthiness requirements. (06 hrs)
Professional Skill 63 Hrs; Professional Knowledge 18 Hrs	Manufacture composite open and closed riveted box using different types of metal and composite materials AAS/N9412	54 Composite riveted box manufacturing :Using CFRP, Aluminum 2024, Titanium TA6V and AISI 316L Stainless steel, sheets size 400 mm x 200 mm, perform operations of: - Riveting - Drilling - Countersinking - Temporary fitting - Rivets and fasteners installation Perform Quality Inspection on an existing installation: defects and non conformities detection by visual inspection. Appropriate Measuring Instrument. [Rivet gauge](21hrs)	English technical vocabulary related to the task. Aircraft description: ATA standard and ATA list, General description of the main Aircraft systems and related parts. Perform riveting operations on composite structure, Rivet pull machine, care, maintenance, specification, description, types and their uses, method of using. Composite metallic assembly specification, Blind rivet specifications for composite and metallic installation, definition, types, sizes, materials, length calculation. (06 hrs)
		55 Composite riveted closed box manufacturing: Using CFRP, size 500 mm x 500 mm, make a metal-composite assembly performing operations of: - Bending - Riveting	English technical vocabulary related to the task. Aircraft description: General description of the main Aircraft systems and related parts. Perform riveting operations on composite structure, Rivet pull machine, care,

NOT TO BE REPUBLISHED ©NIMI

		- Drilling - Countersinking - Pinning - Rivets and fasteners installation - PR sealant application. Appropriate Measuring Instrument. [Rivet gauge](21hrs)	maintenance, specification, description, types and their uses, method of using. Blind rivet specifications for composite and metallic installation, definition, types, sizes, materials, length calculation. PR sealant types, uses, curing, pot life, storage, care & maintenance on composite materials. (06 hrs)
		56 Composite riveted closed box manufacturing –Examination Using CFRP, size 500 mm x 500 mm, make a metal-composite assembly by performing operations of: - Bending - Riveting - Drilling - Countersinking - Pinning - Rivets and fasteners installation - PR sealant application. Appropriate Measuring Instrument. [Rivet gauge](21hrs)	English technical vocabulary related to the task. Aircraft description: General description of the main Aircraft systems and related parts. Perform riveting operations on composit structure, Rivet pull machine, care, maintenance, specification, description, types and their uses, method of using. Blind rivet specifications for composite and metallic installation, definition, types, sizes, materials, length calculation. PR sealant types, uses, curing, pot life.(06hrs)
Professional Skill 21 Hrs; Professional Knowledge 06 Hrs	Prepare the task, the corresponding material and tools for Equipment fitting (Aircraft Systems) by using and processing technical documentation related and standard practices. AAS/N1602	57 Reception of a pipe. Perform operations of: - Checking the lack of impact on the pipes, - Checking the protections - Handling of all types of pipes and different lengths (trolleys, protective foam, bubble wrap, transport case) 58 **Operations before mounting piping (ATA 26,28,29,30,35,36,38...) : Perform operations of :** - Identification of the pipe's plugs shutter - Installation of the corresponding plugs - Checking that the elements to be mounted have not been damaged - Checking that their part or equipment number corresponds to the requisition sheet - Checking the expiry date. (21hrs)	English technical vocabulary related to the task. Aircraft description: General description of the main Aircraft systems and related parts. Unpacking and storage conditions. Different common damage. English technical vocabulary related to the task. Standard practices procedures on the technical documentation.Different types of plugs. (06 hrs)
Professional Skill 42 Hrs; Professional Knowledge 12 Hrs	Identify the aircraft systems assembly phases and mechanical assembly knowing the operation of the different aircraft systems: Hydraulic, Pneumatic, Fuel,	59 Identify the aircraft systems assembly phases by team of 2 students: On structure panels and mock-up, Perform for each system (Hydraulic, Pneumatic, Fuel, Oxygen and Flight controls): - Identification of the different elements and explanations of their role	English technical vocabulary related to the task. Brief description of Hydraulic, Pneumatic, Fuel, Oxygen and Flight controls systems. (06 hrs)

© NIMI NOT TO BE REPUBLISHED

	Oxygen and Flight control. AAS N9413	- Brief presentation of the system operating - Identification of the hazards - Association of each element of the panel its symbol on the corresponding diagram - Identifying in the work card the order of assembly of each element - Assembly on the mockˆup all the different elements - Crosschecking by another team according to the technical documentation.(21hrs)	
		60 Pipe routing on a diagram: On mock-up with technical documentation, perform operations of: - Identification of each pipe mentioned in the work card and its belonging system - Identification of the fluid flow direction - Identification of tools and equipments to achieve the pipe routing - Checking the condition of the connection ends - Preparation of the structure panel and mark - Marking the path of the different elements 61 Screwing and torquing operations On structure panels Perform operations of: - Screwing different types of screws using the appropriate tools - Tightening different types of screws using ratchet socket with the appropriate torque wrench regarding the torque Aluminum required and mentioned in the work card 62 Locking techniques on different subassemblies and structure panel, Perform operations of: - Locking with nut lockwasher, pin and castle nut, self-locking nut - Wire locking of nut retainer, screw, nut and piping and safety wire - Locking fault identification.(21 hrs) tle nut, self-locking nut	English technical vocabulary related to the task. Routing diagram. Definition of the appropriate marking according to the type of pipe. Technical vocabulary related to the systems. Select a torque wrench and read the Aluminum of torquing on an abacus. Locking techniques.(06hrs)

© NIMI NOT TO BE REPUBLISHED

		- Wire locking of nut retainer, screw, nut and piping and safety wire - Locking fault identification. (21 hrs)	
Professional Skill 42 Hrs; Professional Knowledge 12 Hrs	Perform pipe fitting assembly by different operations using standard tools and check for specified accuracy [Metallic pipes, composite ducts and flexible hoses]. AAS/ N9414	63 Metallic pipe installation by performing operations of: - Combs, pipe support collars and clamps installation and torque tightening. - Connection of the pipe in accordance with work card. - Dismantling, assembly valves and fitting with pipes. - Fittings torque tightening with torque wrench. - Ensuring the electrical continuity and grounding with bonding leads. ^^F - Assembly of metal pipes on different structural panels with respect of the gaps between pipes and the surrounding environment. - Checking the mounting constraints.(21 hrs)	English technical vocabulary related to the task. Different pipe joining techniques / grounding / bounding. Identify pipes constraints and gaps between pipes and the surrounding environment. (06 hrs)
		64 Composite duct installation by performing operations of: - Composite duct support collars, brackets installation and torque tightening. - Connection of the duct in accordance with work card. - Dismantling, assembly of sleeves and bellows. - Fittings torque tightening with torque wrench. - Assembly of composite ducts on different structural panels with respect of the gaps between ducts and the surrounding environment. - Checking the mounting constraints. 65 Flexible hose installation by performing operations of: - Connection of the flexible hose in accordance with work card. - Dismantling, assembly of fittings. - Fittings torque tightening with torque wrench. - Assembly of flexible hoses on different structural panels with respect of the gaps between ducts and the surrounding environment.	English technical vocabulary related to the task. Different duct joining techniques/ grounding/ bounding. Identify ducts constraints and gaps between ducts and the surrounding environment. English technical vocabulary related to the task. Different flexible hose joining techniques. Identify flexible hose constraints, bending radius, kinking and gaps between flexible hoses and the surrounding environment. Common damage. Different thermal insulation sleeving assembly techniques. Common damage.(06hrs)

© NIMI NOT TO BE REPUBLISHED

		- Checking the mounting constraints, bending radius and lack of kinking. 66 On different subassemblies perform operations of: - Checking that the insulation sleeves comply with installation plans, standards and technical specifications. - Put the sleeve in place and fix it to the pipe work. (21hrs).	
Professional Skill 63Hrs; Professional Knowledge 18 Hrs	Prepare the task, the corresponding material and tools for Equipment fitting by using and processing technical documentation and standard practices AAS/N1602	67 Perform assembly/ disassembly of Over Heat Detection System by performing operations of: - Muff installation on duct coupling - Connection of the Graviner and wire locking in accordance with work card - Assembly of OHDS on different ducts with respect of the functional installation rules - Checking the tolerances for waviness, bends in wire and two detection loops - Checking the duct coupling - Checking the correct adjustment between the muff position and the Graviner. (21hrs)	English technical vocabulary related to the task. Different types of GRAVINER systems.Common damage / mistakes. (06 hrs)
		68 Perform assembly / disassembly of different mechanical sub-assemblies by operations of: - Applying the task according to technical documentation - Disassembly the mechanical subˆassembly: classification, verification, identification and storage of the parts - Assembly of mechanical sub assembly: clearance gaps, torque tightening, lockage - Checking the correct assembly(Cross-check by another trainee) - Checking the proper functioning of all the assembled parts: bonding, leaks.(21hrs)	English technical vocabulary related to the task. Different types of locking techniques.Common damage / mistakes. (06 hrs)
		69 Wiring technical documentation identification and use - Define necessary documents for the job to perform. - Verify effectively and applicability of the extracted documents. - Find and understand the main information in the different types of	English technical vocabulary related to the task. Safety rules and use technical documentation related to wiring practices Aeronautic electrical wires and cables: characteristics, references, types and gauges, shielded and coaxial cables, special cables, manufacturer marking, identification

© NTMI NOT TO BE REPUBLISHED

		technical documents (texts, electrical schemes, wiring diagrams, manufacturers norms) 70 Harness kit preparation Analyze the work card, identifying tasks,necessary tools and materials for: - Cutting different wires/cables types according to length definitions - Classify and store the cables for next practical exercises.(21hrs)	marking. Wiring tools: cutting pliers, scissors, cable cutter, ruler and tape measure. (06hrs)
Professional Skill 63 Hrs; Professional Knowledge 18 Hrs	Perform surface treatment, Heat treatment and touch-ups on manufactured metal parts. AAS/N9415	71 Surface treatment Perform surface treatments on the manufactured parts by: - Sanding - Pickling - Reworking - Alodine process application - Zinc chromate touch-ups - Painting touch-ups Appropriate Measuring Instrument.(21hrs)	English technical vocabulary related to the task. Corrosion definition: different types of corrosion (galvanic, pitting, filiform, crevice, stress, fatigue, intergranular) Methods of corrosion protection. Corrosion treatment. Physical properties of materials. Surfaces treatment knowledge, grinding, scouring. Surface protection, definition: types, uses, properties, paint. (06hrs)
		72 Tensile Test n°4 Heat treatment by: - Performing Heat treatment on the manufactured parts with Aluminum 2024, Aluminum 5086 and Aluminum 7075 - Tensile tests on the treated parts in order to verify the physical and mechanical properties. (21hrs)	English technical vocabulary related to the task. Corrosion definition: different types of corrosion (galvanic, pitting, filiform, crevice, stress, fatigue, intergranular) Methods of corrosion protection. Corrosion treatment. Safety practices. Physical properties of Aluminum metal: phase diagram of Al-Cu, AL-Zn and Al-Mg, Heat treatment associated. (06hrs)
		73 Sheet metal boxes assembly Using CFRP, GFRP, AF73. Sheet metal boxes assembly Using CFRP, GFRP, AFRP (AramideFibre Reinforced Polymer), Aluminum 2024, Titanium TA6V and AISI 316L Stainless steel, sheets size 500 mm x 300 mm, perform operations of: - Tracing - Manual drilling, Counter drilling using hand drill machine - Deburring - Temporary fitting - Reaming - Countersinking - Rivets and fasteners installation /PR sealant application - Bending - Fitting process (using files) - Performing an access panel with hinge - Self-check by using rivet gauge	English technical vocabulary related to the task.PR sealant types, uses, curing, pot life, storage, care &maintenance on composite materials.Torquing specifications. Wire lock installation.(06hrs)

© NIMI NOT TO BE REPUBLISHED

		74 Perform Quality Inspection on an existing installation: defects and non^conformities detection by visual inspection.(21hrs)	
Professional Skill 42 Hrs; Professional Knowledge 12 Hrs	Perform corrosion treatment and NDT by observing standard procedure.AAS/ N1803	75 Corrosion treatment elimination by : - Manual rework - Tool rework - Sanding blending - Pickling - Alodine treatment - Zinc chromate touch-ups - Painting touch-ups. (21hrs)	English technical vocabulary related to the task. 90°angle sander handling, care and maintenance Corrosion reworking and corrosion removal processes.(06hrs)
		76 Non Destructive Test performing inspections: - Tapping - Ultrasonic - Dye penetrant - Visual camera. (21hrs)	English technical vocabulary related to the task.NDT definition, types, uses, care, maintenance for metallic and composite materials.(06hrs)
Professional Skill 21 Hrs; Professional Knowledge 06 Hrs	Plan, dismantle, and assemble different mechanical components used for full mechanical flight control chain AAS/N1607	77 Perform assembly of flight controls and settings by operations of: - Assembly the components a flight control chain: control rod, cable, pulley, shaft... - Tightening according to the standard torque Aluminum mentioned in work card - Bonding/grounding:screw the ground termination, apply varnish on different pipes - Checking flight controls functionality. - Constraint checking / tension of a cable. (21hrs)	English technical vocabulary related to the task. Technical documentation, tolerance criteria Flight controls chain and setting process Common damage / mistakes. Specific hazards regarding the test procedure. (06 hrs)
Professional Skill 42Hrs; Professional Knowledge 12 Hrs	Plan, dismantle, and assemble different Hydraulic components used for full Hydraulic system and Performpipe routing inspections and leak tests. AAS/ N9416	78 Perform assembly on the Hydraulic system by operations of: - Assembly of the Hydraulic system components: valve, pump, actuators. - Position parts relative to each other - Tightening according to the standard torqueAluminum mentioned in work card - Bonding/grounding: screw the ground termination, apply varnish on different pipes - Functionality check according to the technical documentation. (21hrs)	English technical vocabulary related to the task.Technical documentation and operation of hydraulic system.Common damage / mistakes.(06 hrs)
		79 Perform crosscheck visual inspection (by team of 2 students) on a mock up with defaults on the hydraulic system:	English technical vocabulary related to the task. Technical documentation, standards inspection procedure

NOT TO BE REPUBLISHED © NIMI

		- Routing according to the diagram - Cleanliness - Grounding, bounding standards - Marking and lockage - Marking of systems - Check tightening torques - Check the assembly compliance of the system according to the requirements defined in the documentation. 80 Using compressed air, perform Hydraulic system leak tests.(21hrs)	according to the system. Common faults / mistakes English technical vocabulary related to the task. Technical documentation, tolerance criteria. Specific hazards regarding test procedure.(06hrs)
Professional Skill 42 Hrs; Professional Knowledge 12 Hrs	Plan, dismantle, and assemble different Pneumatic components used for full Pneumatic system and Perform pipe routing inspections and leak tests AAS/N1605	81 Perform assembly on the Pneumatic system by operations of: - Assembly the hydraulic system components: compressor, pressure gauge, filter, regulator... - Position parts relative to each other - Tightening according to the standard torque Aluminum mentioned in work card - Bonding/grounding: screw the ground termination, apply varnish on different pipes - Checking functionality according to the technical documentation - Checking leakages. (21hrs)	English technical vocabulary related to the task.Technical documentation and operation of pneumatic system. Common faults / mistakes. (06 hrs)
		82. Perform crosscheck visual inspection (by team of 2 students) on a mock up with defaults on the Pneumatic system: - Routing according to the diagram - Cleanliness - Grounding, bounding standards - Marking and lockage - Marking of systems - Check tightening torques - Check the assembly compliance of the system according to the requirements defined in the documentation.(21hrs)	English technical vocabulary related to the task. Technical documentation, standards inspection procedure according to the system. Common faults / mistakes. (06 hrs)
Professional Skill 42 Hrs; Professional Knowledge 12 Hrs	Plan, dismantle, and assemble different Oxygen components used for full Oxygen system and Perform pipe routing inspections and leak tests. AAS/N1605	83 Using compressed air, perform Pneumatic system leak tests. 84 Perform assembly and fitting of Oxygen components by operations of: - Position parts relative to each other - Tightening according to the standard torque Aluminum mentioned in work card - Bonding/grounding: screw the ground termination, apply varnish on different pipes	English technical vocabulary related to the task. Technical documentation, tolerance criteria. Specific hazards regarding test procedure.(06hrs)

© NIMI NOT TO BE REPUBLISHED

		- Checking functionality according to the technical documentation.(21hrs)	
		85 Perform crosscheck visual inspection (by team of 2 students) on a mock up with defaults on the Oxygen system: - Routing according to the diagram - Cleanliness - Grounding, bounding according to CDCCL standards - Marking of systems - Check tightening torques - Check the assembly complianceof the system according to the requirements defined in the documentation. 86 Using compressed air, perform Oxygen system leak tests.(21hrs)	English technical vocabulary related to the task. Technical documentation, standards inspection procedure according to the system. Common faults /mistakes. Technical documentation, tolerance criteria. Specific hazards regarding test procedure.(06hrs)
Professional Skill 42 Hrs; Professional Knowledge 12 Hrs	Plan, dismantle, and assemble different Fuel components used for full Fuel system and Perform pipe routing inspections and leak tests. AAS/ N1608	87 Perform assembly and fitting of fuel components by operations of: - Assembly of Fuel system components: pump, pipes, vent valve, fixed and semi-floating elements, floating fittings, pipe fastening elements, different fitting joints, pipe marking... - Positioning parts relative to each other - Tightening according to the standard torque Aluminum mentioned in work card - Bonding/grounding: screw the ground termination, apply varnish on different pipes (Fuel Tank Safety standard) - Checking leakages. (21hrs)	English technical vocabulary related to the task. Technical documentation and operation of Fuel system. Common faults / mistakes. (06 hrs)
		88 Perform crosscheck visual inspection (by team of 2 students) on a mock up with defaults on the Fuel system: - Routing according to the diagram - Cleanliness - Grounding, bounding according to CDCCL standards - Marking of systems - Check tightening torques - Check the assembly compliance of the system according to the requirements defined in the documentation 89 Using compressed air, perform Fuel system leak tests.(21hrs)	English technical vocabulary related to the task. Technical documentation, standards inspection procedure according to the system. Common faults / mistakes. English technical vocabulary related to the task. Technical documentation, tolerance criteria. Specific hazards regarding test procedure. (06 hrs)

© NIMI NOT TO BE REPUBLISHED

Professional Skill 63 Hrs; Professional Knowledge 18 Hrs	Join cables to build a harness and Insertion and extraction on different types of connector terminations by using the appropriate tools AAS/N1609	90 Shape and tie wires/cables to build a harness: - Check wires/cables :references lengths (notion of tolerances) - Carry out the wires/cables identification in correlation with the technical instructions - Set wires/cables according to their destination (layout - wiring diagram) - Tie wires/cables with plastic ties or lacing tape - Perform installation of textile/ plastic protective sheaths or sleeves - Install position markers (coloured scotch tape or lacing tape) - Identify harness and its different branches using labels. (21hrs)	English technical vocabulary related to the task. Cutting wires/cables to length within tolerances defined by the work card, wiring diagram and layout drawing understanding, tying techniques using plastic ties or textile lacing tape, mechanical protection for harness (plastic and textile sleeves, shrinkable sleeves), tightening gun settings according to the technical documentation, identification by labels and sleeves. (06 hrs)
		91 Shape and tie wires/cables to build a harness - Examination - Check wires/cables: references - lengths (notion of tolerances) - Carry out the wires/cables identification in correlation with the technical instructions - Set wires/cables according to their destination (layout - wiring diagram) - Tie wires/cables with plastic ties or lacing tape - Perform installation of textile/ plastic protective sheaths or sleeves - Install position markers (coloured scotch tape or lacing tape) - Identify harness and its different branches using labels 92 Strip different types of wires/cables (insulation removal) by: - Stripping small gauge wires using the stripping pliers - Removal insulation on shielded cables using the scalpel - Stripping and disassembly large section cables using the specific tooling - Checking for non conformities, (21hrs)	English technical vocabulary related to the task. Cutting wires/cables to length within tolerances defined by the work card, wiring diagram and layout drawing understanding, tying techniques using plastic ties or textile lacing tape, mechanical protection for harness (plastic and textile sleeves, shrinkable sleeves), tightening gun settings according to the technical documentation, identification by labels and sleeves. English technical vocabulary related to the task. Stripping techniques using appropriate tools according towires/cables types and gauges, and in compliance with technical documentation. Stripping defects/ nonconformities. Safety rules with cutting tools. Wiring tools: Scalpel or cutter, stripping pliers, ruler. (06 hrs)
		93 Using infra-red gun or hot air gun perform operations of: - Shielding by end implementation (special measurements, insulation stripping, shield cutting, wire lead and solder sleeve	English technical vocabulary related to the task. Aeronautic shielded cables. Stripping techniques and associated inspections. Solder sleeves and shrinkable sleeves.

NOT TO BE REPUBLISHED © NIMI

		installation, infra-red gun heating, checking) - Shielding by window implementation (special measurements, insulation stripping, shield cutting, wire lead and solder sleeve installation, infra-red gun heating, checking) - Shield stop implementation (special measurements, insulation stripping, shield cutting, shrinkable sleeve heating with hot airgun). (21hrs)	Wiring tools: Scalpel or cutter, cutting pliers, scissors, ruler, infra-red gun, hot air gun. Quality requirements.(06hrs)
Professional Skill 84 Hrs; Professional Knowledge 22 Hrs	Fit and install harness on different types of panels and structure elements and Perform basic electrical tests relative to connections and check compliance of harness building AAS/N1609	94 Perform crimping operations of different terminal components by: - Crimping contacts on small gauge wires - Crimping lugs on small gauge wires - Crimping splices small gauge wires - Crimping plugs on big gauge cables - Checking for non^conformities - Ensuring the traceability of crimping operations on the associated technical sheet 95 Insertion and extraction of various contacts on different types of connector / Connect lugs on terminal blocks by performing operations of: - Insertion/extraction on different connectors type (rectangular, circular, modules) using the appropriate tools - Associated checks - Coding change (fool proofing devices) on rectangular connectors - Connecting lugs on terminal blocks and secure terminal block covers. (21hrs)	English technical vocabulary related to the task. Terminal types: contents, splices, lugs, spare wire end caps. Stripping techniques. Crimping procedures for small gauge wires with hand crimping pliers (for contacts, lugs and splices) and associated controls (Quality requirements). Crimping procedures for big gauge cables with pneumatic crimping tool and associated controls (Quality requirements).Wiring tools: Crimping pliers, locators, positioner, stripping pliers, cutting pliers. Tools validity. English technical vocabulary related to the task. Insertion and extraction tools and the associated standard practices. Terminal types for connectors: pins, sockets, short-male contacts, sealing pins Connector types: plugs/sockets, mobile fixed, circular, rectangular, junction modules, grounding modules, ARINC connectors, terminal blocks, relay bases. Connector accessories: back shells, cable clamps, fool proofing devices, protective covers, sealing plugs Terminal types: contacts, splices, lugs, spare wire end caps. Wiring tools: contacts insertion/extraction tools, fool proofing ejector. (06 hrs)
		96 Using a torque wrench, strap wrench, thread lock, lock wire and connector assembly tools, finalize assembly of harness components by performing operations of: - Installation all connector accessories according to the work card - Tightening and torque the back	English technical vocabulary related to the task. Connector types plugs/sockets, mobile fixed, circular, rectangular, junction modules, grounding modules, ARINC connectors, terminal blocks, relay bases. Connector accessories: back shells, cable clamps, fool proofing devices, protective covers, sealing plugs.

© NAMI NOT TO BE REPUBLISHED

		shells on circular connectors and apply the appropriate locking procedures, marking procedures - Coding on rectangular connectors and install cable clamps 97 Perform electrical tests using a multimeter: - Carry out a wire continuity check on the harness - Perform troubleshooting in case of mistakes during insertion task. - Correct the wrong position contacts by extracting/re-inserting - Ensure the harness compliance according to quality and functional requirements after repair - Cross-check on the harness of another student - Perform Quality Inspection on an existing installation: defects and non-conformities detection by visual inspection.(21hrs)	Wiring tools: Strap wrench, torque wrench, locking wirepliers, connector assembly plate. Consumable supplies: thread lock, lock wire. English technical vocabulary related to the task Wiring diagram understanding and troubleshooting method.Quality Inspection. Electrical tests: continuity check using a multimeter. (06hrs)
		98 Fit and install harness on different types of attaching part (+20 scenarios) by performing operations of: - Inspecting the integrity of harness before beginning the installation tasks - Choosing the attaching parts / routing supports (plastic vee supports, metallic or plastic clamps, spacers, screws and washers) to be fastened to the structure panels according to the work card - Installation of the attaching parts on the panels using ratchet, sockets, screwdrivers and torque wrench - Installation harness on the different attaching points in accordance with 2D routing drawing - Bonding/grounding connections: torque the bonding/grounding terminals, apply protection varnish on the bonding/grounding terminals - Ensuring the protection of the connection elements with plastic caps or bags - Ensuring the traceability of the tasks on the associated traceability sheet - Self-check. (42hrs)	English technical vocabulary related to the task. Attaching parts (plastic vee supports, metallic or plastic clamps, spacers, screws and washers). Structure and fuselage parts (frames, stringers, brackets, panels). Harness fitting rules: special care for harness integrity, bending radii, position markers, routing, segregation, tightening. (10hrs)

NOT TO BE REPUBLISHED © NIMI

Heat treatment and its purpose

Objectives: At the end of this lesson you shall be able to
- **state the different types of heat treatments**
- **list the advantage and dis advantage of heat treatment**
- **state the purpose of heat treatment.**

Heat treatment and introduction

The properties of steel depend upon its composition and its structure. These properties can be changed to a considerable extent, by changing either it composition or its structure. The structure of steel can be changed by heating it to a particular temperature, and then allowing it to cool at a definite rate. The process of changing the structure and thus changing the properties of steel by heating and cooling, is called 'heat treatment of steel'

Types

The general types of heat treatment are:

- Hardening
- Tempering
- Annealing
- Normalizing
- Surface hardening

Hardening

What is hardening?

Hardening is a heat-treatment process in which steel is heated to 30 - 50° C above the critical range. Soaking time is allowed to enable the steel obtain a uniform temperature throughout its cross-section. Then the steel is rapidly cooled through a cooling medium.

Purpose of hardening

To develop high hardness and wear resistance properties

Hardening affects, the mechanical properties of steel like strength, toughness, ductility etc.

Hardening adds cutting ability.

Process of hardening

Steel with a carbon content above 0.4% is heated to 30 - 50°C above the upper critical temperature,

(Fig 1) soaking time of 5 mts./10mm thickness of steel is allowed. (Fig 1)

Then the steel is cooled rapidly in a suitable medium. Water, oil, brine or air is used as a cooling medium, depending upon the composition of the steel and the hardness required.

Fig 1

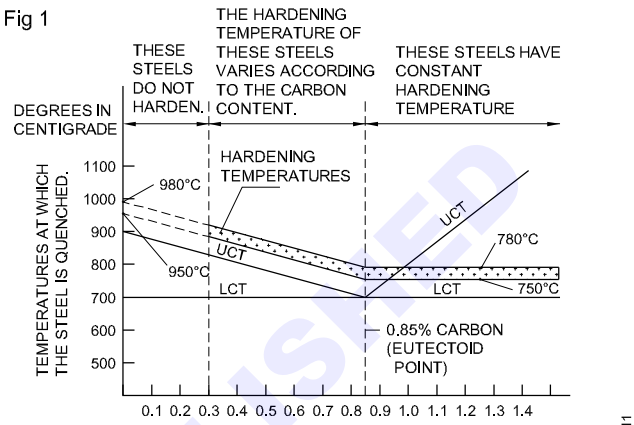

HARDENING OF PLAIN CARBON STEELS

Tempering

What is tempering?

Tempering is a heat-treatment process consisting of reheating the hardened steel to a temperature below 400°C, followed by cooling.

Purpose of tempering the steel

Steel in its hardened condition is generally too brittle to be used for certain functions. Therefore, it is tempered.

The aims of tempering are:

- to relieve the internal stresses
- to regulate the hardness and toughness
- to decrease the brittleness
- to restore some ductility
- to induce shouck resistance.

Annealing

The annealing process is carried out by heating the steel above the critical range. Soaking it for sufficient time to allow the necessary changes to occur, and cooling at a predetermined rate, usually very slowly within the furnace

Purpose

- To soften the steel.
- To improve the machinability.

© NIMI NOT TO BE REPUBLISHED

- To soften the steel.
- To improve the machinability.
- To increase the ductility

Fig 2

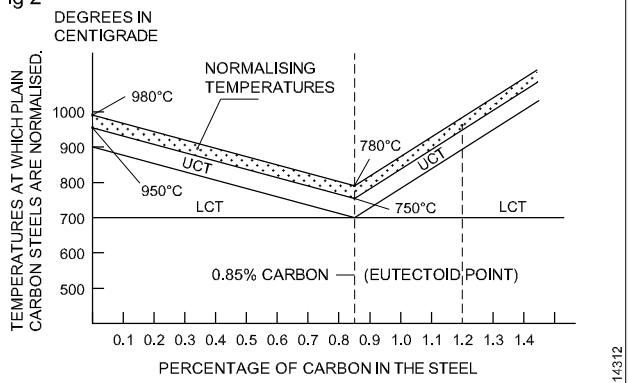

NORMALISING TEMPERATURES FOR PLAIN CARBON STEELS

- To relieve the internal stresses.
- To refine the grain size and to prepare the steel for subsequent heat treatment process.

Normalizing

The process of removing the internal defects or to refine the structure of steel components is called normalizing.

Purpose

- To produce fine grain size in the metal
- To remove stresses and strains formed in the internal structure due to repeated heating and uneven cooling

Fig 3

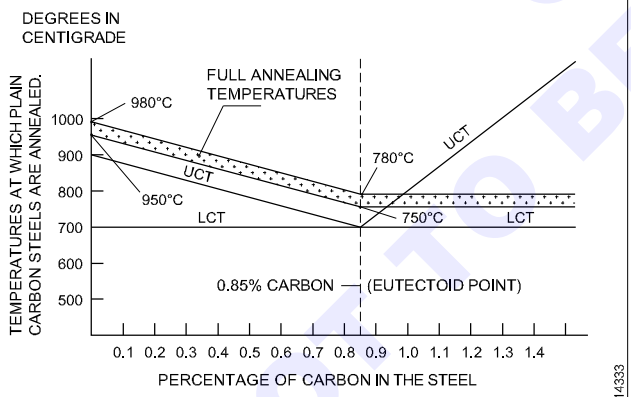

ANNEALING TEMPERATURES FOR PLAIN CARBON STEELS

- To reduce ductility
- To prevent warping.

Surface hardening

Most of the components must have a hard, wear-resisting supported by a tough, shock-resisting core for better servlce condition and longer life. This combination different properties can be obtained in a single piece of by surface hardening.

Types of surface hardening

Case hardening

Nitriding

Flame hardening

Induction hardening

Advantages of heat treatment

Heat treating can improve or change properties in metal including

Improving workability and machinability

Improving wear resistance and durability

Improving strength and toughness:

Improving magnetic properties

Dis advantages of heat treatment

Heat treatment can cause distortion in some materials

There is chance to form oxidation on the metal surface

While heat treating other contamination may strick on metal

Production cost is added.

© NIMI NOT TO BE REPUBLISHED

Manufacturing processes for metallic materials

Objectives: At the end of this lesson you shall be able to
- **name the different processes for metallic materials**
- **describe the different additive manufacturing processes.**

Casting and moulding processes

Casting

Casting is a manufacturing process in which a liquid material is usually poured into a mould, which contains a hollow cavity of the desired shape, and then allowed to solidify.

The solidified part is also known as a casting, which is ejected out of the mould to complete the process.

Moulding

Moulding is the process of manufacturing by shaping liquid or pliable raw material using a negative rigid frame called a mould. This itself may have been made using a pattern or model of the final object.

Difference between casting and moulding

The basic difference is the method of pouring the material into the mould. In moulding it will be poured under pressure and in most of the casting process, it does not require any external force to pour the material as the molten material has very less viscosity and is capable to flow with its gravitational force.

In moulding process, the output is the final finished part.

In most of the casting process, the output is unfinished part that required the final finishing by machining.

Main bulk deformation processes

Forging (Fig 1)

Fig 1

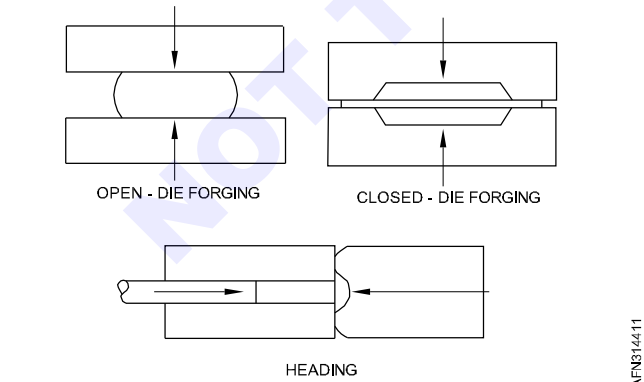

Forging is a manufacturing process involving the shaping of solid metal using localized compressive forces. The blows are delivered with a hammer, often a power hammer, or a die.

Forging is often classified according to the temperature at which it is performed:

- cold forging (a type of cold working),
- warm forging, or hot forging (a type of hot working).

Rolling (Fig 2)

Rolling is a metal forming process in which metal stock is passed through one or more pairs of rolls to reduce the thickness and to make the thickness uniform.

Fig 2

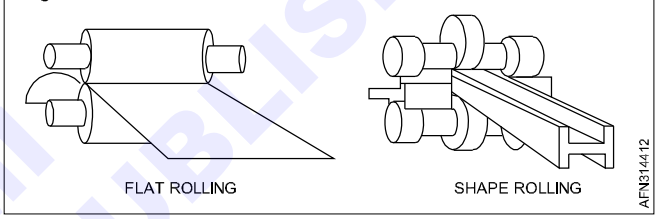

Extrusion (Fig 3)

Extrusion is a process used to create objects of a fixed cross-sectional profile. The material is pushed through a die of the desired cross-section.

Fig 3

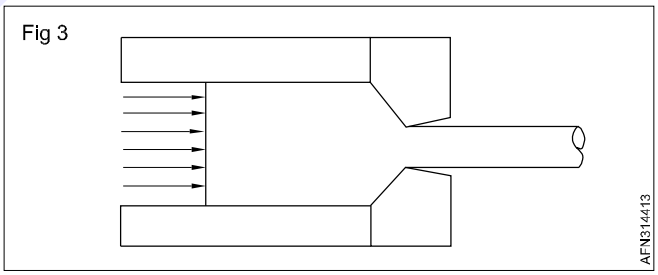

Advantages:

- Ability to create very complex cross-sections.
- Working brittle materials, because the material only encounters compressive and shear stresses.

Drawing (Fig 4)

Fig 4

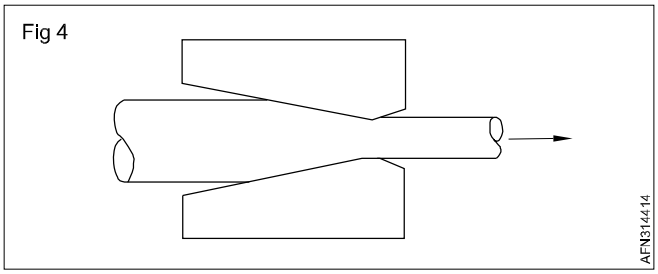

© NIMI NOT TO BE REPUBLISHED

Drawing is a metalworking process which uses tensile forces to stretch metal. As the metal is drawn (pulled), it stretches thinner, into a desired shape and thickness. Drawing is classified in two types: sheet metal drawing and wire, bar, and tube drawing.

Main sheet metal forming processes

Bending (Fig 5)

Bending is a manufacturing process that produces a V-shape, U-shape, or channel shape along a straight axis in ductile sheet metal.

Fig 5

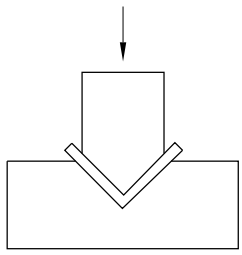

Rolling

1 Roll bending (Fig 6)

Roll bending produces a cylindrical shaped product from plate or steel metals.

Fig 6

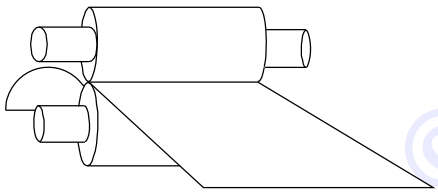

2 Roll forming (Fig 7)

Roll forming or plate rolling is a continuous bending operation in which a long strip of metal is passed through consecutive sets of rolls, or stands, each performing only an incremental part of the bend, until the desired cross-section profile is obtained.

Fig 7

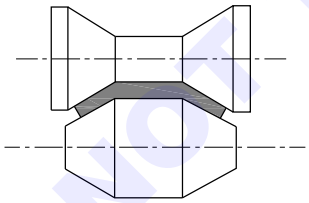

Shearing

Shearing, also known as die cutting, is a process which cuts stock without the formation of chips or the use of burning or melting.

Blanking / Piercing / Punching (Fig 8)

Blanking and piercing are shearing processes in which a punch and die are used to modify webs.

Fig 8

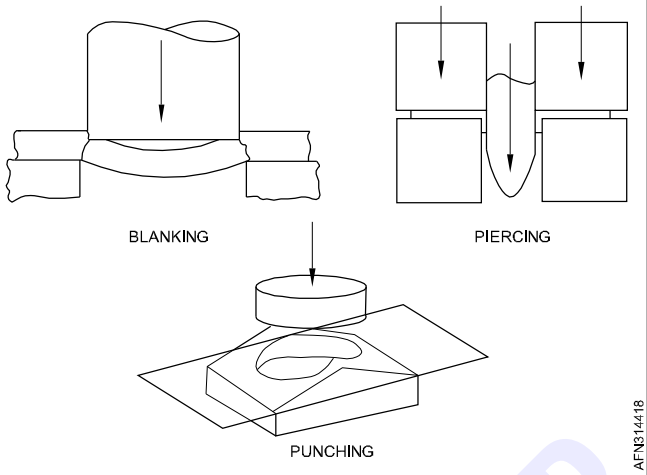

The tooling and processes are the same between the two, only the terminology is different.

In blanking the punched-out piece is used and called a blank.

In piercing the punched-out piece is scrap.

An alternative name of piercing is punching.

Stamping / Pressing

Stamping, also known as pressing, is the process of placing flat sheet metal in either blank or coil form into a stamping press where a tool and die surface forms the metal into a net shape.

Stamping includes a variety of sheet-metal forming manufacturing processes, such as punching using a machine press or stamping press, blanking, embossing, bending, flanging, and coining.

Additive manufacturing (AM)

Additive Manufacturing (AM) processes produce physical objects from digital information piece-by-piece, line-by-line, surface-by- surface, or layer-by-layer.

This simultaneously defines the object's geometry and determines its material properties. AM processes place, bond, and/or transform volumetric primitives or elements of raw material to build the final part.

Powder Bed Fusion processes (PBF)

In the PBF process, one or more thermal sources (typically lasers or electron beam sources) are used to sinter or fuse thin powder layers that are placed in a defined printing chamber. Excess powder residues must be removed from the parts after printing.

Materials: Thermoplastic materials and elastomers, especially polyamide or nylon; metals, such as stainless steel and tool steel, titanium and alloys, aluminium alloys, ceramic.

© NIMI NOT TO BE REPUBLISHED

Extrusion Based processes (EB)

EB processes can be divided into physical and chemical processes. In chemical EB processes, a liquid is applied through a nozzle and solidifies in a chemical reaction. In physical EB processes, thermoplastic material is melted, extruded and placed onto a heated build platform by a heated nozzle. This process is often also called fused deposition modelling (FDM).

Materials: Thermoplastic polylactides; acrylonitrile-butadiene-styrene.

Material Jetting (MJ)

MJ processes usually apply drops of liquid photopolymers or waxes via a printing head to a build platform where they are then polymerized by UV light. The continuous stream (CS) and DOD methods have become the most frequently used processes for drop depositing.

Materials: Photopolymers, wax.

Binder Jetting (BJ)

In BJ processes, a binder is applied to powder layers and infiltrates these one after another, there by forming a three-dimensional object. This process is also called 3D printing (3DP). After printing, the objects may be additionally infiltrated with further binders or undergo thermal treatment in order to increase their strength, for example.

Materials: Starch and water-based binders, metals and bronze or plastic materials, sand and plastic materials, ceramic and plastic materials.

Sheet Lamination processes (SL)

In SL processes, thin, bidimensional sheets are cut out from a material and joined together layer by layer so that a three-dimensional object is produced.

Materials: Paper, metals, plastic materials, ceramic.

Directed Energy Deposition processes (DED)

In DED processes, a laser or an electron beam source simultaneously melt the substrate and the material to be deposited on the substrate and continuously feed these to the printing head. In contrast to PBF processes, the material is fused during deposition.

Materials: Metals, plastic materials, ceramic.

Photo polymerization processes (PP)

PP processes use liquid photopolymers that are bonded to a substrate in dot or layer-type patterns so that the polymer solidifies. During the process, the build platform is immersed in the photopolymer. The most common UV source is a laser.

Material: Photopolymers.

© NIMI NOT TO BE REPUBLISHED

Sealant removal

Objective: At the end of this lesson you shall be able to
- **describe how to remove sealant on structural parts.**

For removing cured sealant from surfaces, use plastic or hardwood tools (see scrapers Fig 1) that do not scratch those surfaces and that do not damage paint.

Use soft material sharped scraper to remove most of the sealant.

To remove residual sealant, use a soft material scraper and/or wiping materials or natural bristle brushes saturated with solvent.

> **Attempting to remove residual sealant with a hard material scraper or spatula (in stainless steel or aluminium for example) may result in damage to the primer and/or part surface.**
>
> **As with all tools, take care to prevent damaging the part during use.**
>
> **Inspect scraper before and periodically during use, and discard if broken tips, nicks or other damage are observed.**

Abrade the sharpened edge with 220-grit or finer aluminium oxide paper to remove loose particles. Remove loose sanding particles from the scraper tip.

Sharpen scrapers using a metal sharpening wheel or other mechanical device.

Fig 1

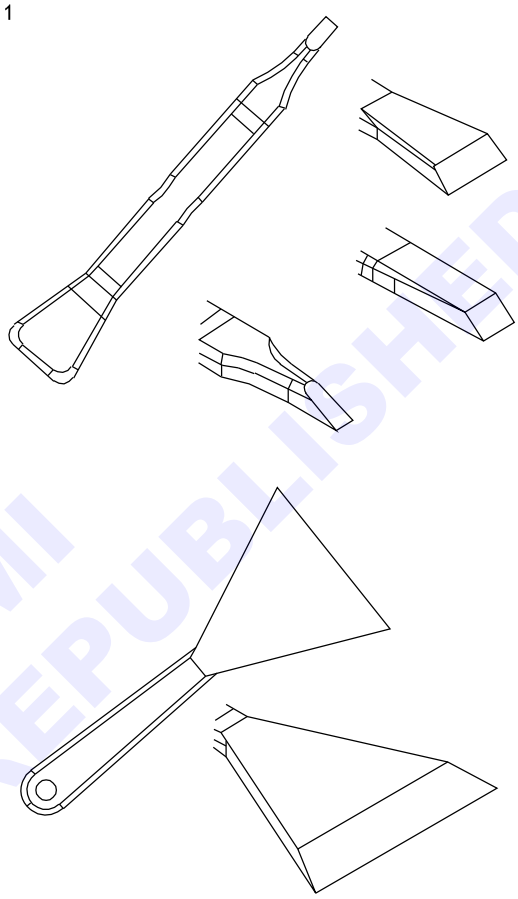

© NIMI NOT TO BE REPUBLISHED

Composite materials overview

Objectives: At the end of this lesson you shall be able to
- **name the constituents of composite materials**
- **name the most commons matrices**
- **name the most commons reinforcements.**

Definition

A composite material is a product made by combining two or more dissimilar materials such as fibres and resins to create a product with exceptional structural properties not present in the original materials.

Overall, the properties of the composite are determined by:

- The properties of the fibre.
- The properties of the resin.
- The ratio of fibre to resin in the composite.
- The geometry and orientation of the fibres in the composite.

Constituents

There are two main categories of constituent materials:

- Matrices.
- Reinforcements.

Matrices

The matrix protects the fibres from environmental and external damage and transfers the load between the fibres.

The resins that are used in fibre reinforced composites are sometimes referred to as polymers. Polymers are generally called synthetic resins or simply resins.

Polymers can be classified under two types, thermoplastic and thermosetting, according to the effect of heat on their properties.

Thermoplastics, like metals, soften with heating and eventually melt, hardening again with cooling. Typical thermoplastics include nylon, polypropylene and ABS, and these can be reinforced, although usually only with short, chopped fibres such as glass.

Thermosetting materials are formed from a chemical reaction in situ, where the resin and hardener (or catalyst) are mixed and then undergo a non-reversible chemical reaction to form a hard, infusible product.

In some thermosets, such as phenolic resins, volatile substances are produced as by-products. Other thermosetting resins such as polyester and epoxy cure by mechanisms that do not produce any volatile by products and thus are much easier to process.

Although there are many different types of resin in use in the composite industry, most structural parts are made with three main types, namely polyester, vinylester and epoxy.

Polyester resins

Polyester resins are the most widely used resin systems, particularly in the marine industry.

There are two principal types of polyester resin used as standard laminating systems in the composites industry. Orthophthalic polyester resin is the standard economic resin used by many people. Isophthalic polyester resin is now becoming the preferred material in industries such as marine where its superior water resistance is desirable.

Vinylester resins

Vinylester resins are similar in their molecular structure to polyesters.

Its characteristics, strengths, and bulk cost are intermediate between polyester and epoxy.

Vinyl ester has lower resin viscosity than polyester and epoxy.

Epoxy resins

The large family of epoxy resins represent some of the highest performance resins of those available currently. Epoxies generally out-perform most other resin types in terms of mechanical properties and resistance to environmental degradation, which leads to their almost exclusive use in aircraft components.

Usually identifiable by their characteristic amber or brown colouring, epoxy resins have several useful properties. Both the liquid resin and the curing agents form low viscosity easily processed systems. Epoxy resins are easily and quickly cured at any temperature from 5°C to 150°C, depending on the choice of curing agent.

Epoxies differ from polyester resins in that they are cured by a 'hardener' rather than a catalyst.

Besides polyesters, vinylesters and epoxies there are a few other specialised resin systems that are used where their unique properties are required:

- **Phenolics**: Primarily used where high fire-resistance is required, phenolics also retain their properties well at elevated temperatures. The phenolic resins tend to be brittle and do not have high mechanical properties.
- **Cya nate esters**: Primarily used in the aerospace industry. The material's excellent dielectric properties make it very suitable for use with low dielectric fibres such as quartz for the manufacture of radome.

© NIMI NOT TO BE REPUBLISHED

- **Bismaleimides**

  Primarily used in aircraft composites where operation at higher temperatures (230°C wet / 250°C dry) is required. e.g. engine inlets, high speed aircraft flight surfaces.

- **Polyimide's**

  Used where operation at higher temperatures than bismaleimides can stand is required (use up to 250°C wet / 300°C dry). Typical applications include missile and aero-engine components.

Reinforcements

Fibre

The fibres provide strength and stiffness to reinforce the matrix and help it resist cracks and fractures.

There are several types of fibre. The most common are:

- **Glass**

  Glass fibre is formed when thin strands of silica-based or other formulation glass are extruded into many fibres with small diameters suitable for textile processing.

  Cheaper and more flexible than carbon fibre, it is stronger than many metals by weight, is non-magnetic, non-conductive, transparent to electromagnetic radiation, can be moulded into complex shapes, and is chemically inert under many circumstances.

  The most common types of glass fibre used in fiber glass is E-glass, which is alumino-borosilicate glass with less than 1% alkali oxides, mainly used for glass-reinforced plastics.

- **Aramid**

  Aramid fibre is the generic name for aromatic polyamide fibres.

  The bright golden yellow filaments produced can have a range of properties, but all have high strength and low density giving very high specific strength. All grades have good resistance to impact.

  The most known of the aramid fibres is Kevlar.

- **Carbon**

  Carbon fibre is produced by the controlled oxidation, carbonisation and graphitisation of carbon.

  Carbon fibre has the highest specific stiffness of any commercially available fibre, very high strength in both tension and compression and a high resistance to corrosion, creep and fatigue. Their impact strength, however, is lower than either glass or aramid

- **Quartz**

  A very high silica version of glass with much higher mechanical properties and excellent resistance to high temperatures (1000°C).

  With low dielectric properties, quartz fibre provides the protective properties demanded by the very latest generation of antennas and communications equipment used in the aerospace sector.

Tapes and fabrics

Objective: At the end of this lesson you shall be able to
- **explain the main tape and fabric types.**

A fabric is a manufactured assembly of long fibres of carbon, aramid or glass, or a combination of these, to produce a flat sheet of fibres.

These layers are held together either by mechanical interlocking of the fibres themselves or with a secondary material to bind these fibres together and hold them in place, giving the assembly enough integrity to be handled.

Fabric types are categorised by the orientation of the fibres and by the various construction methods used to hold the fibres together.

Fibre orientation

The main fibre orientation categories are:

- Unidirectional fabrics, or tapes.
- Woven fabrics, or simply fabrics.

What are warp and fill

Warp and fill (also called weft) refer to the orientation of woven fabric. The warp direction refers to the threads that run the length of the fabric. It forms the longer dimension of the fabric and is the direction of the roll length.

The fill, or weft, refers to the yarns that are pulled and inserted perpendicularly to the warp yarns across the width of the fabric. We can see the difference between these in the (Fig 1).

Fig 1

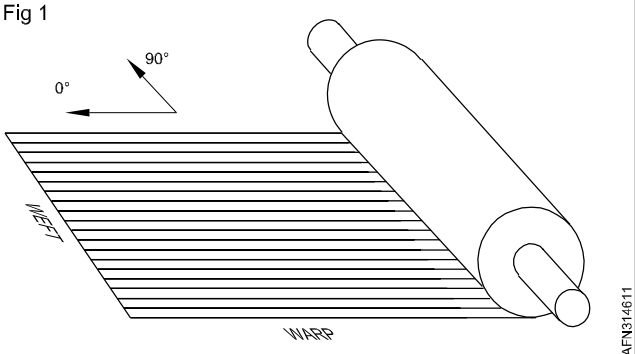

Unidirectional tape (Fig 2)

A unidirectional (UD) fabric (or tape) is one in which the fibres run in one direction only. A small amount of fibre or other material may run in other directions with the main intention being to hold the primary fibres in position,

© NIMI NOT TO BE REPUBLISHED

although the other fibres may also offer some structural properties.

Fig 2

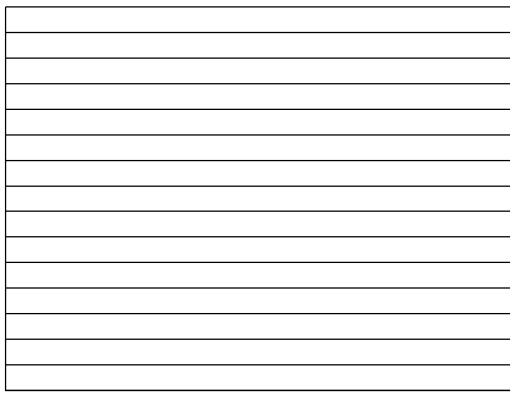

Woven Fabrics

Woven fabrics are produced by the interlacing of warp (longitudinal - 0°) fibres and fill(transverse - 90°) fibres in a regular pattern or weave style. The fabric's integrity is maintained by the mechanical interlocking of the fibres. Drape[1], surface smoothness and stability of a fabric are controlled primarily by the weave style.

The most commons weave styles are:

Plain (Fig 3)

Each warp fibre passes alternately under and over each weft fibre. The fabric is symmetrical, with good stability and reasonable porosity. However, it is the most difficult of the weaves to drape, and the high level of fibre crimp imparts relatively low mechanical properties compared with the other weave styles.

Fig 3

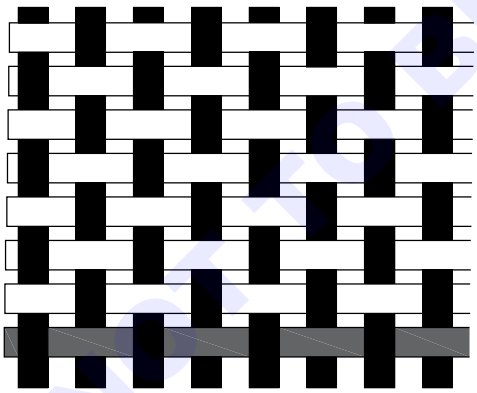

Twill (Fig 4)

One or more warp fibres alternately weave over and under two or more weft fibres in a regular repeated manner. This produces the visual effect of a straight or broken diagonal rib to the fabric. Superior wet out and drape is seen in the twill weave over the plain weave with only a small reduction in stability. With reduced crimp, the fabric also has a smoother surface and slightly higher mechanical properties.

Fig 4

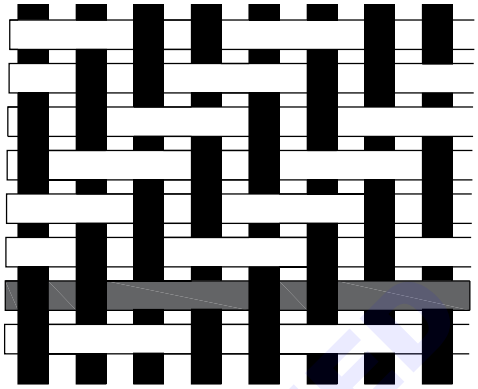

Satin (Fig 5)

Satin weaves are fundamentally twill weaves modified to produce fewer intersections of warp and weft. The harness number used in the designation (typically 4, 5 and 8) is the total number of fibres crossed and passed under, before the fibre repeats the pattern.

Satin weaves are very flat, have good wet out and a high degree of drape. The low crimp gives good mechanical properties.

Satin weaves allow fibres to be woven in the closest proximity and can produce fabrics with a close tight weave. However, the asymmetry causes one face of the fabric to have fibre running predominantly in the warp direction while the other face has fibres running predominantly in the weft direction. Care must be taken in assembling multiple layers of these fabrics to ensure that stresses are not built into the component through this asymmetric effect.

Fig 5

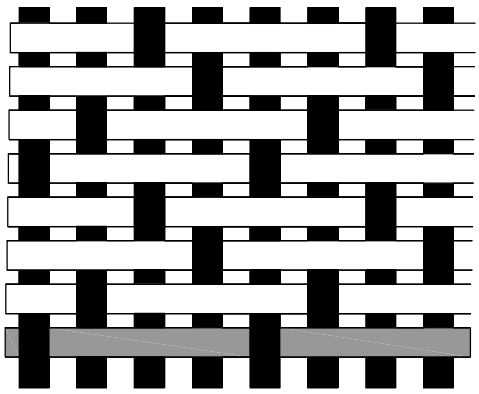

© NIMI NOT TO BE REPUBLISHED

Laminate orientation

Objective: At the end of this lesson you shall be able to
- **list the importance of the laminate orientation.**

Structural properties, such as stiffness, dimensional stability, and strength of a composite laminate, depend on the stacking sequence of the plies.

The stacking sequence describes the distribution of ply orientations through the laminate thickness.

As the number of plies with chosen orientations increases, more stacking sequences are possible.

Fiber Orientation

The strength and stiffness of a composite build-up depends on the orientation sequence of the plies.

The practical range of strength and stiffness of carbon fiber extends from values as low as those provided by fiberglass to as high as those provided by titanium. This range of values is determined by the orientation of the plies to the applied load.

Proper selection of ply orientation in advanced composite materials is necessary to provide a structurally efficient design.

The part might require:

- 0° plies to react to axial loads.
- ±45° plies to react to shear loads.
- 90° plies to react to side loads.

Because the strength design requirements are a function of the applied load direction, ply orientation and ply sequence must be correct. (Fig 1)

Fig 1

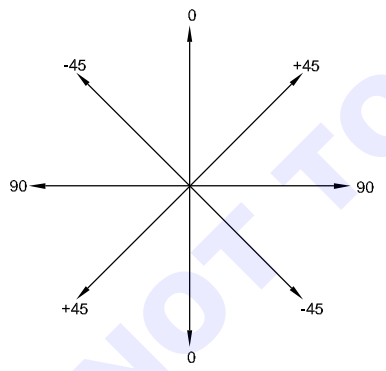

The fibers in a unidirectional material run in one direction and the strength and stiffness is only in the direction of the fibre. (Fig 2)

Fig 2

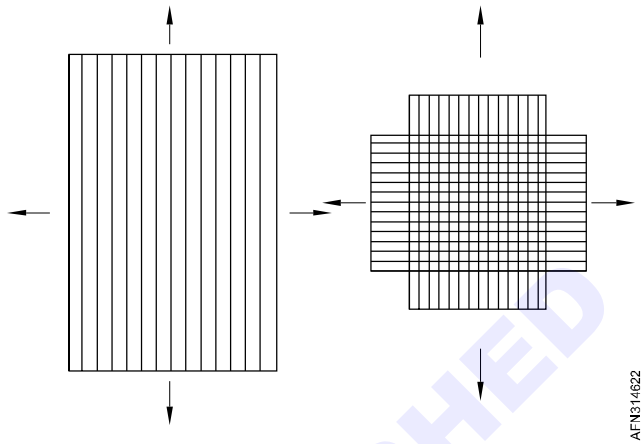

The fibres in a bidirectional material run in two directions, typically 90° apart. A plain weave fabric is an example of a bidirectional ply orientation. These ply orientations have strength in both directions but not necessarily the same strength. (Fig 2)

The plies of a quasi-isotropic layup are stacked in a 0°, -45°, +45°, and 90° sequence.

These types of ply orientation simulate the properties of an isotropic material. Many aerospace composite structures are made of quasi-isotropic materials. (Fig 3)

Fig 3

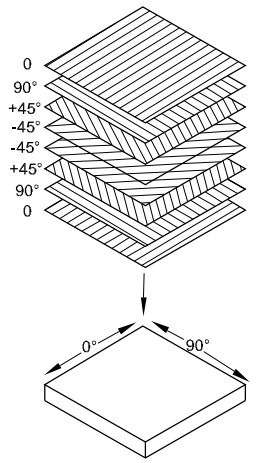

© NIMI NOT TO BE REPUBLISHED

Manufacturing processes of composite materials

Objective: At the end of this lesson you shall be able to
- **describe the main manufacturing processes.**

Wet Lay-up/Hand Lay-up

Hand lay-up is the most common and least expensive open-moulding method because it requires the least amount of equipment. Fibre reinforcements are placed by hand in a mould and resin is applied with a brush or roller.

Laminates are left to cure under standard atmospheric conditions.

Advantages:

- Widely used for many years.
- Simple principles to teach.
- Low cost tooling, if room-temperature cure resins are used.

Disadvantages:

- Resin mixing, laminate resin contents, and laminate quality are very dependent on the skills of laminators. Low resin content laminates cannot usually be achieved without the incorporation of excessive quantities of voids.
- Health and safety considerations of resins. The lower viscosity of the resins also means that they have an increased tendency to penetrate clothing, etc.
- Limiting airborne styrene concentrations to legislated levels from polyesters and vinylesters is becoming increasingly hard without expensive extraction systems.

Fig 1

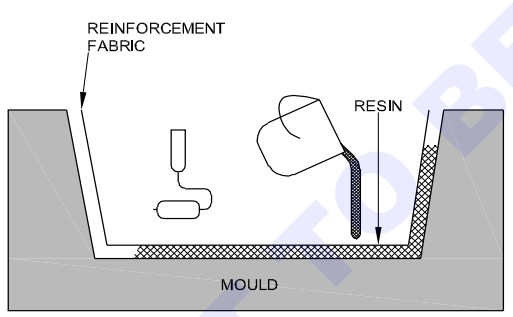

WET LAY-UP / HAND LAY-UP

Vacuum Bagging - Wet Lay-up

This is basically an extension of the wet lay-up process described above where pressure is applied to the laminate once laid-up in order to improve its consolidation. This is achieved by sealing a plastic film over the wet laid-up laminate and onto the tool. The air under the bag is extracted by a vacuum pump and thus up to one atmosphere of pressure can be applied to the laminate to consolidate it.

Use with epoxy and phenolic resins. Polyesters and vinylesters may have problems due to excessive extraction of styrene from the resin by the vacuum pump.

Advantages:

- Higher fibre content laminates can usually be achieved than with standard wet lay-up techniques.
- Lower void contents are achieved than with wet lay-up.
- Better fibre wet-out due to pressure and resin flow throughout structural fibres, with excess into bagging materials.
- Health and safety: The vacuum bag reduces the amount of volatiles emitted during cure.

Disadvantages:

- The extra process adds cost both in labour and in disposable bagging materials
- A higher level of skill is required by the operators
- Mixing and control of resin content still largely determined by operator skill
- Although vacuum bags reduce volatiles, exposure is still higher than infusion or prepreg processing techniques.

Fig 2

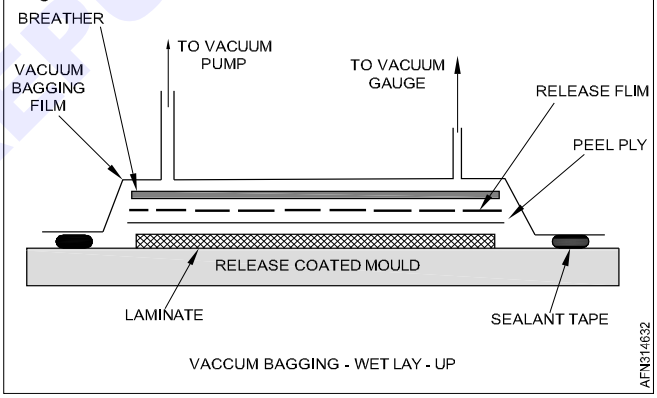

VACCUM BAGGING - WET LAY - UP

Resin Transfer Moulding (RTM)

Resin transfer moulding (RTM), sometimes called liquid moulding, is a closed-moulding method in which reinforcement material is loaded into a closed mould, the mould is clamped, and resin is pumped in (through injection ports) under pressure. This process produces complex parts with smooth finishes on all exposed surfaces. The process can be simple or highly automated-and cycle times are speedy. By laying up reinforcement material dry inside the mould, any combination of materials and orientation can be used, including 3-D reinforcements.

Advantages:

- High fibre volume laminates can be obtained with very low void contents.
- Good health and safety, and environmental control due to enclosure of resin.

© NIMI NOT TO BE REPUBLISHED

- Both sides of the component have a moulded surface.

Disadvantages:

- Matched tooling is expensive.
- Generally limited to smaller components.
- Unimpregnated areas can occur resulting in very expensive scrap parts.

Fig 3

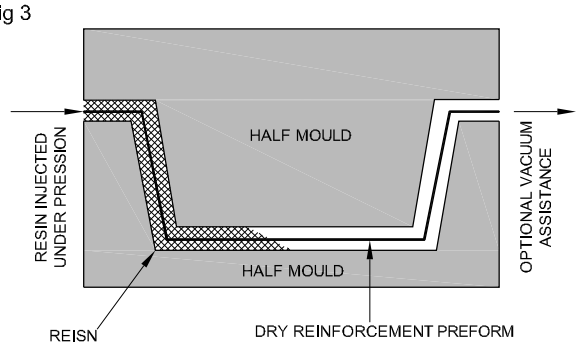

RESIN TRANSFER MOULDING

Vacuum Infusion Processing (VIP)

Vacuum infusion processing (VIP) is a technique that uses vacuum pressure to drive resin into a laminate. Vacuum infusion is typically used to manufacture very large structures. Infusion produces strong, lightweight laminates and offers substantial emissions reductions. This process uses the same low-cost tooling as wet lay-up open moulding and requires minimal equipment.

The fibre stack is then covered with peel ply and a knitted type of non-structural fabric. The whole dry stack is then vacuum bagged, and once bag leaks have been eliminated, resin is allowed to flow into the laminate. The resin distribution over the whole laminate is aided by resin flowing easily through the non-structural fabric and wetting the fabric out from above.

Fig 4

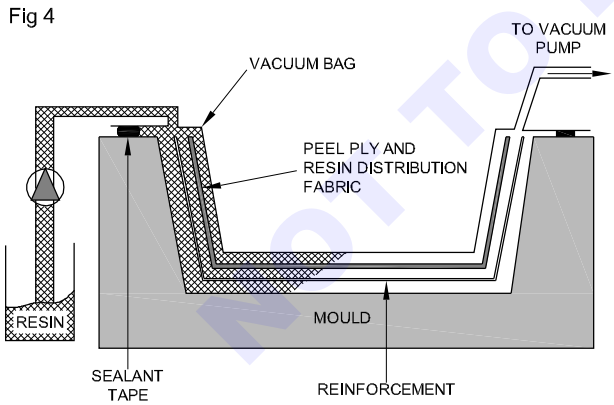

VACCUM - INFUSION PROCESSING

Advantages:

- High fibre volume laminates can be obtained with very low void contents.
- Good health and safety, and environmental control due to enclosure of resin.
- Very large components can be fabricated with high fibre volume fractions and low void contents.
- Standard wet lay-up tools may be able to be modified for this process.
- **Disadvantages:**
- Relatively complex process to perform consistently well on large structures without repair.
- Resins must be very low in viscosity, thus comprising mechanical properties.
- Unimpregnated areas can occur resulting in very expensive scrap parts.

Prepreg - Autoclave

Fabrics are pre-impregnated by the materials manufacturer with a pre-catalysed resin. The catalyst is largely latent at ambient temperatures giving the materials several weeks, or sometimes months, of useful life when defrosted. However, to prolong storage life the materials are stored frozen. The prepregs are laid up by hand or machine onto a mould surface, vacuum bagged and then heated to typically 120-180°C. This allows the resin to initially reflow and eventually to cure. Additional pressure for the moulding is usually provided by an autoclave (autoclave is a pressurised oven) which can apply up to 5 atmospheres to the laminate.

Fig 5

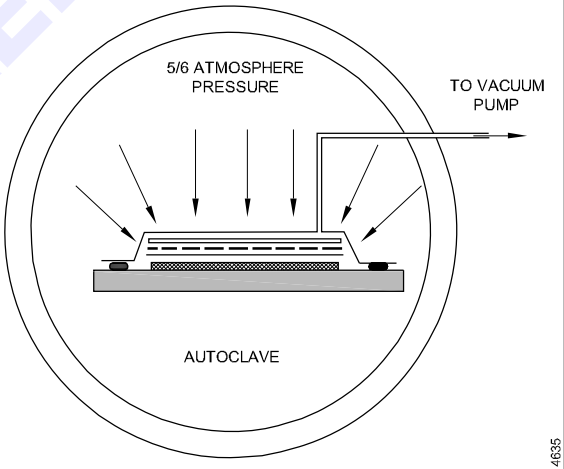

PREPREG - AUTOCLAVE

Advantages:

- Resin/catalyst levels and the resin content in the fibre are accurately set by the materials manufacturer.
- The materials have excellent health and safety characteristics and are clean to work with.
- Resin chemistry can be optimised for mechanical and thermal performance, with the high viscosity resins being impregnable due to the manufacturing process.

NOT TO BE REPUBLISHED

- The extended working times means that structurally optimised, complex lay-ups can be readily achieved.
- Potential for automation and labour saving.

Disadvantages:

- Autoclaves are required to cure the component. These are expensive, slow to operate and limited in size.
- Tooling needs to be able to the process temperatures involved.

Prepreg - Out of Autoclave

Low Temperature Curing prepregs are made exactly as conventional autoclave prepregs but have resin chemistries that allow cure to be achieved at temperatures from 60-120°C.

Fig 6

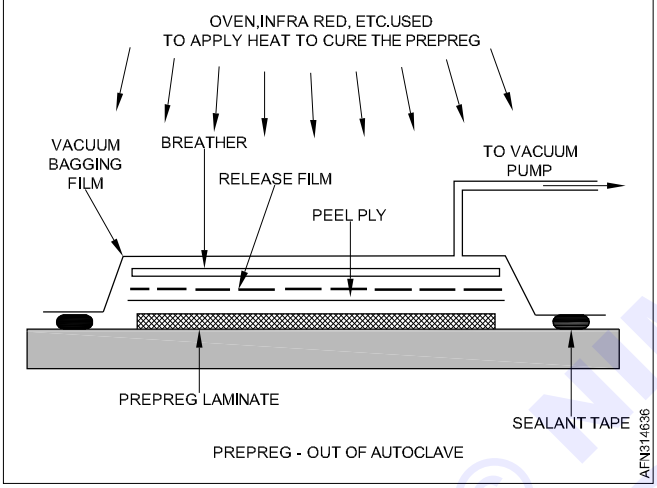

PREPREG - OUT OF AUTOCLAVE

For low temperature curing (60°C), the working life of the material may be limited to as little as a week, but for higher temperature catalysis (>80°C) working times can be as long as several months. The flow profiles of the resin systems allow for the use of vacuum bag pressures alone, avoiding the need for autoclaves.

Generally, only epoxy prepreg are used.

Advantages:

- All the advantages associated with the use of conventional prepregs are incorporated in low-temperature curing prepregs.
- Cheaper tooling materials can be used due to the lower cure temperatures involved.
- Large structures can be readily made since only vacuum bag pressure is required, and heating to these lower temperatures can be achieved with simple hot-air circulated ovens, often built in-situ over the component.
- Conventional foam core materials can be used.
- Lower energy cost than autoclave process.
- Robust process providing a high level of dimension tolerance and repeatability.

Disadvantages:

- Tooling needs to be able to withstand higher temperatures than Infusion Processes.

© NIMI NOT TO BE REPUBLISHED

Sandwich materials

Objectives: At the end of this lesson you shall be able to
- **name the constituents of sandwhich panel**
- **name the most common cores used.**

Sandwich panels (Fig 1)

Single skin laminates, made from glass, carbon, aramid, or other fibers may be strong, but they can lack stiffness due to their relatively low thickness. Traditionally the stiffness of these panels has been increased by the addition of multiple frames and stiffeners, adding weight and construction complexity.

A sandwich structure consists of two high strength skins separated by a core material. Inserting a core into the laminate is a way of increasing its thickness without incurring the weight penalty that comes from adding extra laminate layers.

In effect the core acts like the web in an I-beam, where the web provides the lightweight separator between the load-bearing flanges.

Fig 1

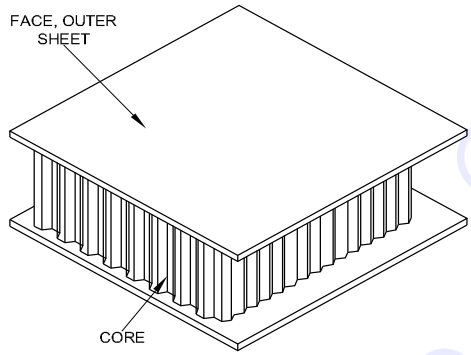

In an I-beam the flanges carry the main tensile and compressive loads and so the web can be relatively lightweight. Core materials in a sandwich structure are similarly low in weight compared to the materials in the skin laminates.

The outer sheets are made of a relatively stiff and strong material, typically aluminium alloys, fibre-reinforced plastics, titanium, steel, or plywood; they impart high stiffness and strength to the structure and must be thick enough to withstand tensile and compressive stresses that result from loading.

The core material is lightweight, and normally has a low modulus of elasticity. Core materials typically fall within three categories: rigid polymeric foams (phenolics, epoxy, polyurethanes, etc.) and honeycombs.

Foam cores: Foams are one of the most common forms of core material for boat manufacturing and general industry. They can be manufactured from a variety of synthetic polymers including polyvinyl chloride (PVC), polystyrene (PS), polyurethane (PU), polymethyl meth acrylamide (acrylic), polyetherimide (PEI) and styrene acrylonitrile (SAN).

They are available in a variety of thicknesses, typically from 5mm to 50mm.

Honeycomb cores (Fig 2)

Properties of honeycomb materials depend on the size (and therefore frequency) of the cells and the thickness and strength of the web material. Sheets can range from typically 3-50 mm in thickness

Fig 2

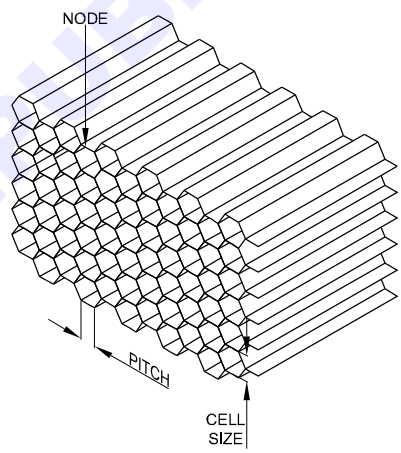

Aluminium honeycomb: Aluminium honeycomb produces one of the highest strength/weight ratios of any structural material. There are various configurations of the adhesive-bonding of the aluminium foil which can lead to a variety of geometric cell shapes (usually hexagonal). Properties can also be controlled by varying the foil thickness and cell size. The honeycomb is usually supplied in the unexpanded block form and is stretched out into a sheet on-site.

Nomex honeycomb: Nomex honeycomb is made from Nomex paper. The initial paper honeycomb is usually dipped in a phenolic resin to produce a honeycomb core with high strength and very good fire resistance. It is widely used for lightweight interior panels for aircraft in conjunction with phenolic resins in the skins. Special grades for use in fire retardant applications can also be made which have the honeycomb cells filled with phenolic foam for added bond area and insulation.

NOT TO BE REPUBLISHED © NIMI

Honeycomb sandwich

The honeycomb sandwich construction is one of the most valued structural engineering innovations developed by the composites industry.

Used extensively in aerospace and many other industries, the honeycomb sandwich provides the following key benefits over conventional materials:

- Very low weight
- High stiffness
- Durability
- Production cost savings

Fig 3

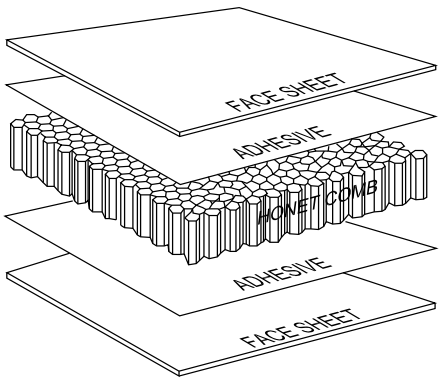

EXAMPLE OF HONEYCOMB SANDWITCH

AFN314713

Difference between CFRP, GFRP, AFRP

Objectives: At the end of this lesson you shall be able to
- **list the difference between common FRP used**
- **state the mechanical properties of FRP**

Fibre-reinforced plastic(FRP): also calledfibre-reinforced polymeris a composite material made of apolymermatrix reinforced with fibres. The fibres are usually glass, carbon and aramid.

Glass Fibre Reinforced Plastic - GFRP

The characteristic properties of glass fibres are high strength, low cost with good water resistance and resistance to chemicals.

The main reasons for using GFRP are:

- In instances where metal cannot be used (e.g. for radar domes or other non electrical conducting applications)
- The ease and low cost of producing very complex shapes
- To provide good strength/weight ratio
- Its ability to produce selected directional strength.

The main disadvantage of glass fibre is that it lacks stiffness and, as such, is not suitable for applications subject to high structural loadings.

Carbon Fibre Reinforced Plastic - CFRP

High strength, excellent creep level, resistance to chemical effects, low conductivity, low density and high elastic modulus are the advantages of carbon fibres.

CFRP was primarily developed to retain (or improve upon) the high strength-to-weight ratio characteristics exhibited by GFRP, but with very much greater stiffness values.

Carbon fibres are very stiff and, when formed into a composite, the Young's Modulus ('E') value can be higher than steel. CFRP is not only six times stiffer than GFRP but is also over 50% stronger. It also has twice the strength of high strength aluminium alloy and three times the stiffness.

The weak sides of carbon fibers are being expensive and anisotropic materials with low compressive strength.

Aramid Fibre reinforced Plastic - AFRP

The aramid fibres are closely related to the nylon-type of synthetic fibres and are well known for their superior toughness, strength-to-weight characteristics and heat-resistance.

Better known under its trade name - Kevlar -in cloth form, it is a soft, yellow, organic fibre that is extremely light, strong and tough. Its great impact-resistance makes it useful in areas, which are liable to be struck by debris, as experienced in areas around engine reverse-thrust buckets. Kevlar is used to manufacture bullet proof jackets and, also, as a reinforcement, in aircraft fuel tanks.

Fig 1

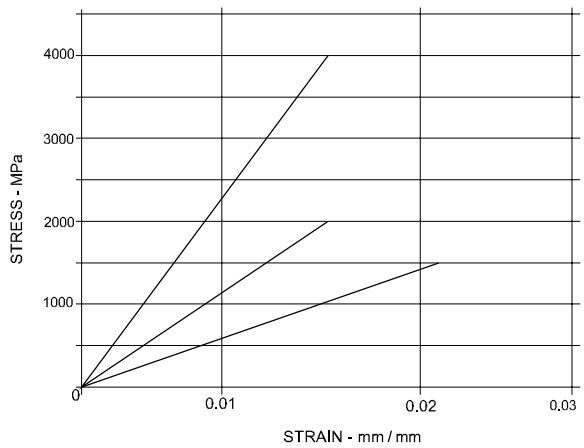

A COMPARISON AMONG CFRP ,GFRP , AFRP, IN TEAM OF STRESS STRAIN RELATIONSHIP

AFN314721

Aramid fibres are more expensive than glass moderate stiffness, good in tension applications but lower strength in compression.

Aramids have high tensile strength, high stiffness, high modulus and low weight and density.

© NIMI NOT TO BE REPUBLISHED

Drilling composite materials

Objectives: At the end of this lesson you shall be able to
- **describe the commons rules for drilling composite materials**
- **list the type of cutting tools used.**

Introduction

FRP is very abrasive, it is necessary to use very hard materials at least for the cutting edges tools. For example:

- Brazed carbide inserts.
- Monoblock carbide tools.
- Polycrystalline diamond insert (PCD).
- Carbide coating.
- Diamond.

Manual drilling is defined as a process where the operator applies the axial effort for drilling, reaming and countersinking operations.

The machines used are pneumatic portable machines (drilling machines, reaming machines, etc.) which can be equipped with drill bit, reamer, micrometric stops for countersinking, chamfering or deburring).

The tool shall be guided by a guide bush inserted into a tripod, a quadripod, a drilling template or any other device to ensure perpendicularity.

Clamping parts

The parts of the stacks to drill should be completely held, rigid and positioned with locating, and clamping devices, in order to:

- Reduce risk of burr and delamination at the interface, between the parts
- Avoid contamination between parts during drilling process (chips, lubricant)

Examples of clamping solutions:

- Temporary fasteners.
- C-clamps.
- Jig clamps.
- Screws.Etc.

The clamping devices shall present sufficient clamping force to position and fix aircraft parts during the drilling operations.

To ensure a good sealant squeeze out, the clamping devices used have to maintain a constant clamping force during the complete drilling phase and assure a part-to-part contact.

Clamping devices are to be selected so that no dents are formed on the clamped material and the surface protection as well as hole wall surfaces are not damaged.

Backing support when drilling

To avoid hole exit damage or delamination in composite materials (particularly on surfaces without glass ply), backing plates could be used.

Perfect contact between backing support and the exit face part shall be ensured.

Speed modification depending on phase

Composite Materials	Feed rate	Rotation speed
Start of the hole	Medium	Low
Middle of the hole	Medium	Increase
End of the hole	Low	Maximum

Drilling and reaming tools

Solid carbide step drill (Fig 1)

Fig 1

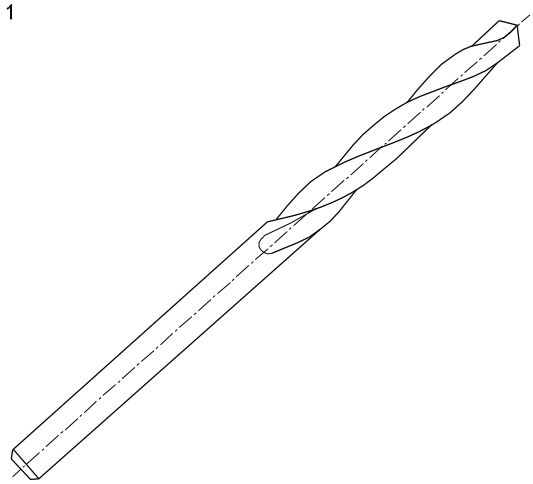

SOLID CARBIDE STEP DRILL

© NIMI NOT TO BE REPUBLISHED

Kevlar drill - Solid Carbide (Fig 2)

Fig 2

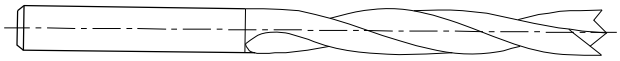

KEVLAR DRILL - SOLID CARBIDE

AFN314912

Drill/reamer (Dagger) ogival tip 3 or 4 flutes - Solid Carbide (Fig 3)

Fig 3

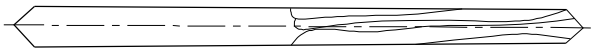

DRILL / REAMER

AFN314913

Fluted hand reamer (Fig 4)

Fig 4

FLUTED HAND REAMER

AFN314914

2 flutes trepans (with pilot) - Solid Carbide (Fig 5)

Fig 5

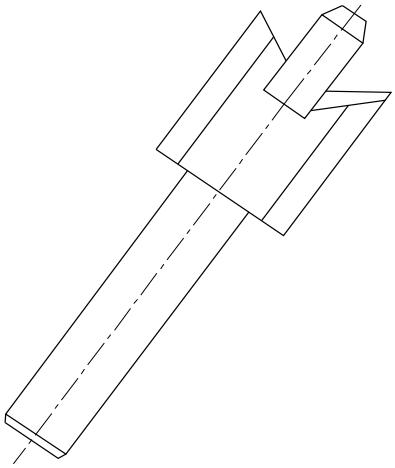

FLUTES TREPANS

AFN314915

Deburring tool

Tungsten Carbide countersink cutter (Fig 6)

Fig 6

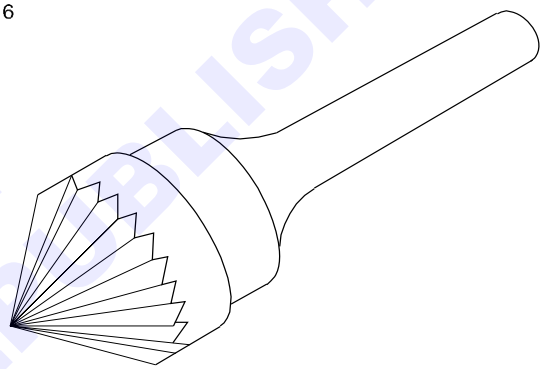

TUNGSTEN CARBIDE

AFN314916

© NIMI NOT TO BE REPUBLISHED

Cutting speed and RPM for composite materials

Objectives: At the end of this lesson you shall be able to
- **define cutting speed for composite materials.**
- **differentiate between curring speed and RPM**
- **explain how to select RPM for drill sizes from tables.**

For a drill to give a satisfactory performance, it must operate at the correct cutting speed and feed.

Cutting speed is the speed at which the cutting edge passes over the material while cutting and is expressed in metres per minute.

Cutting speed is also sometimes stated as surface speed or peripheral speed.

The selection of the recommended cutting speed for drilling depends on the materials to be drilled, and the tool material.

Drilling

Material	Cutting Speed	Type of Drill
Composites		
Thermoplastics	20 / 100	ARS / 60° > 90°
Epoxycarbon	20 / 60	Carbide
Epoxy Kevlar	40 / 60	ARS / 60° > 90°
Epoxy glass	40 / 60	Carbide
HYBRIDE ASSEMBLIES		
Epoxycarbon / aluminum	20 / 100	Carbide
Epoxycarbon / titanium	20 / 40	Carbide
Epoxycarbon / inconel	20 / 40	Carbide
Epoxycarbon / stainlesssteel	20 / 40	Carbide

Reaming

Material	Cutting Speed	Type of Reamer
Thermoplastics	20 / 35	ARS / 60° > 90°
Epoxycarbon	20 / 35	Carbide
Epoxy Kevlar	20 / 35	ARS / 60° > 90°
Epoxy glass	20 / 35	Carbide
HYBRIDE ASSEMBLIES		
Epoxycarbon / aluminum	20 / 35	Carbide
Epoxycarbon / titanium	10 / 40	Carbide
Epoxycarbon / inconel	10 / 40	Carbide
Epoxycarbon / stainlesssteel	10 / 40	Carbide

Tool manufacturers usually provide a table of cutting speeds required for different materials.

The recommended cutting speeds for different materials are given in the table. Based on the cutting speed recommended, the RPM, at which a drill has to be driven, is determined.

Calculating RPM

$$v = \frac{n x d x \pi}{1000} \text{ m/min}$$

$$n = \frac{v x 1000}{d x \pi} \text{ RPM}$$

n - RPM

v - cutting speed in m/min.

d - diameter of the drill in mm

π = 3.14

Examples: Calculate the RPM for a high-speed steel drill ∅ 24 to cut mild steel.

The cutting speed for MS is taken as 30 m/min. from the table. It is always preferable to set the speed to the nearest available lower range. The selected speed Is 300 RPM.

The RPM will differ according to the diameter of the drills.

The cutting speed being the same, larger diameter drills will have lesser RPM and smaller diameter drills will have higher RPM.

The recommended cutting speeds are achieved only by actual experiments.

Feed in drilling

Objectives: At the end of this lesson you shall be able to
- **state what is meant by feed**
- **state the factors that contribute to an efficient feed rate.**

Feed is the distance (X) a drill advances into the work in one complete rotation.

Feed is expressed in hundredths of a millimetre.

Example - 0.040mm

The rate of feed depends on several factors.

- Finish required
- Type of drill (drill material)
- Material to be drilled

Factors like rigidity of the machine, holding of the work piece and the drill, will also have to be considered while determining the feed rate. If these are not to the required standard, the feed rate will have to be decreased.

It is not possible to suggest a particular feed rate taking all the factors into account.

© NIMI NOT TO BE REPUBLISHED

The table for the feed rate given here is based on the average feed values suggested by the different manufacturers of drills. (Table 1)

Drill diameter (mm) HSS	Rate of feed(mm/rev)
1.0 - 2.5	0.040 - 0.060
2.6 - 4.5	0.050 - 0.100
4.6 - 6.0	0.075 - 0.150
6.1 - 9.0	0.100 - 0.200
9.1 - 12.0	0.150 - 0.250
12.1 - 15.0	0.200 - 0.300
15.1 - 18.0	0.230 - 0.330
18.1 - 21.0	0.260 - 0.360
21.1 - 25.0	0.280 - 0.380

Too coarse a feed may result in damage to the cutting edges or breakage of the drill.

Too slow a rate of feed will not bring improvement in surface finish but may cause excessive wear of the tool point, and lead to chattering of the drill.

For optimum results in the feed rate while drilling, it is necessary to ensure the drill cutting edges are sharp. Use the correct type of cutting fluid.

Speed modification depending on phase

Composite Materials	Feed rate	Rotation speed
Start of the hole	Medium	Low
Middle of the hole	Medium	Increase
End of the hole	Low	Maximum

© NIMI
NOT TO BE REPUBLISHED

Structural fasteners - overview

Objectives: At the end of this lesson you shall be able to
- **describe the commons fasteners used for structural assembly**
- **name the main types of structural fasteners.**

Fig 1

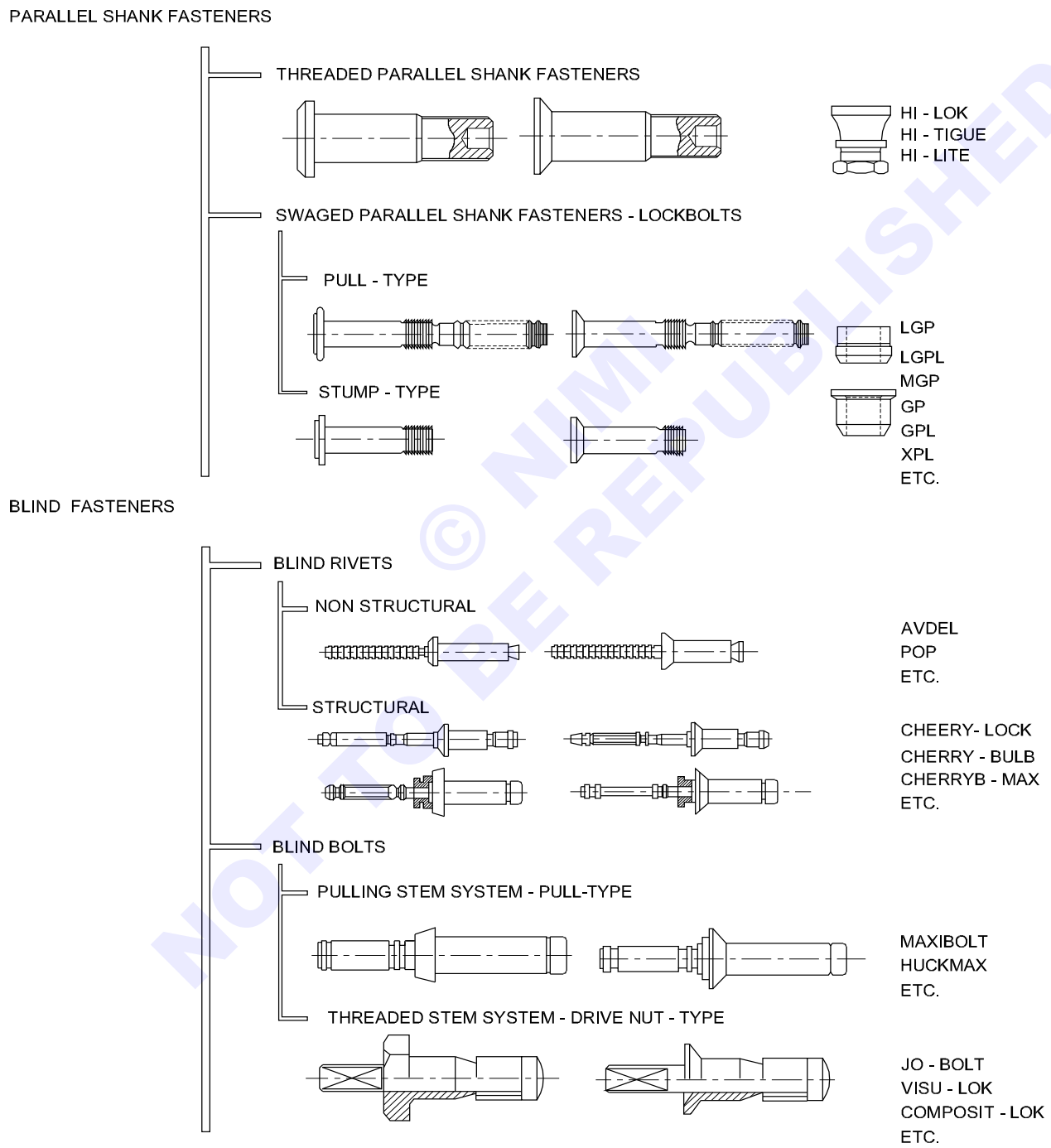

© NIMI NOT TO BE REPUBLISHED

Threaded parallel shank fasteners - Hi-Lok™, Hi-Tigue™, Hi-lite™

Objectives: At the end of this lesson you shall be able to
- **sate the compostion of threaded parallel shank fastener**
- **understand a designation of threaded parallel shank fasteners.**

A threaded parallel shank fastener is a nonexpanding fastener that has either a collar threaded on the pin shank to lock it in place. (Fig 1)

Available with either countersunk or protruding heads, threaded parallel shank fastener are permanent type fasteners assemblies and consist of a pin and a collar.

Fig 1

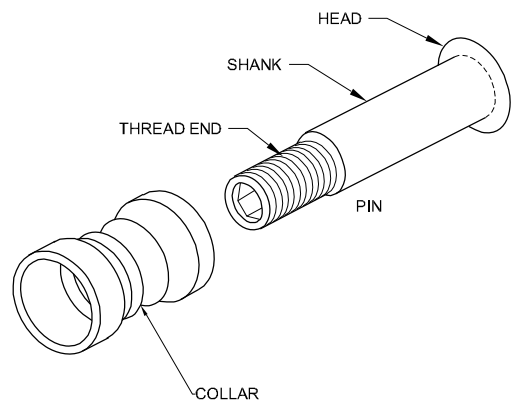

Pins

The pin is designed in two basic head styles (Fig 2). For shear applications, the pin is made in countersunk style and in a compact protruding head style. For tension applications, the regular countersunk and protruding head styles are available.

Fig 2

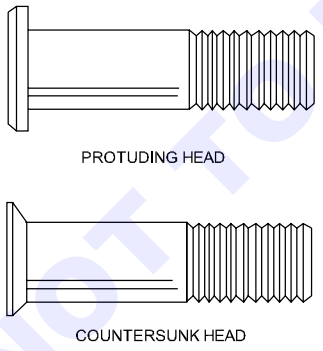

The Hi-Lok™, Hi-Tigue™ and Hi-lite™ pin has a slight radius under its head to increase fatigue life. After drilling, deburr the edge of the hole to allow the head to seat fully in the hole. (Fig 3)

The threaded end of the Hi-Lok™, Hi-Tigue™ and Hi-Lite™ two-piece fastener (pin and collar) contains a hexagonal shaped recess in the treaded end of the pin. (Fig 4)

Fig 3

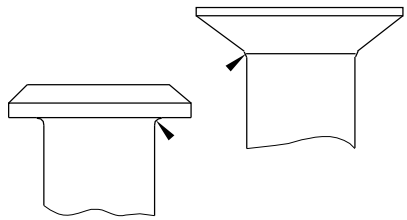

Fig 4

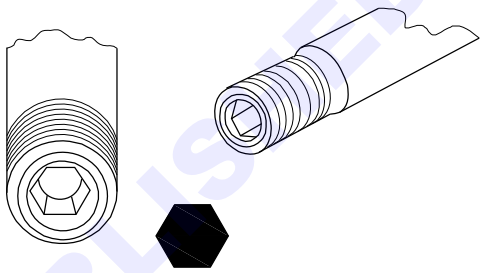

These fasteners are installed in interference fit holes for aluminum structure and a clearance fit for steel, titanium, and composite materials.

Collars

The self-locking, threaded Hi-Lok™ and Hi-lite™ collar has an internal counter bore at the base to accommodate variations in material thickness. This recess serves as a built-in washer. This area contains a portion of the shank and the transition area of the fastener. (Fig 5)

Fig 5

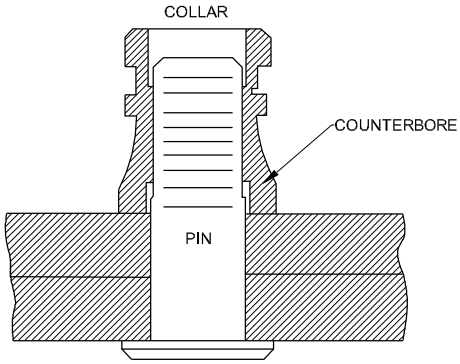

At the opposite end of the collar is a wrenching device that is torqued by the driving tool until it shears off during installation, leaving the lower portion of the collar seated with the proper torque without additional torque inspection. This shear-off point occurs when a predetermined preload or clamp-up is attained in the fastener during installation. (See chapter "Installation")

NOT TO BE REPUBLISHED © NIMI

Hi-Lok and Hi-Tigue collar (Fig 6)

Fig 6

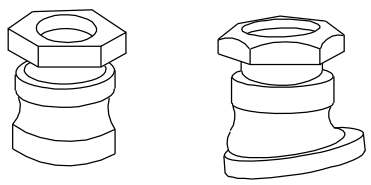

Hi-Lite and EN6114/6115 collar (Fig 7)

Fig 7

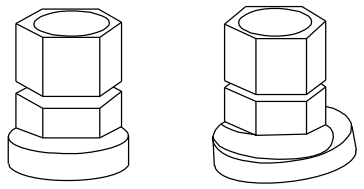

Hi-Lok™ Fastening System - HL (Fig 8)

The advantages of Hi-Lok™ two-piece fastener include its light weight, high fatigue resistance, high strength, and its inability to be over-torqued. The pins, made from alloy steel, corrosion resistant steel, or titanium alloy, come in many standard and oversized shank diameters. The collars are made of aluminum alloy, corrosion resistant steel, or alloy steel. The collars have wrenching flats, fracture point, threads, and a recess. The wrenching flats are used to install the collar. The fracture point has been designed to allow the wrenching flats to shear when the proper torque has been reached. The threads match the threads of the pins and have been formed into an ellipse that is distorted to provide the locking action.

Fig 8

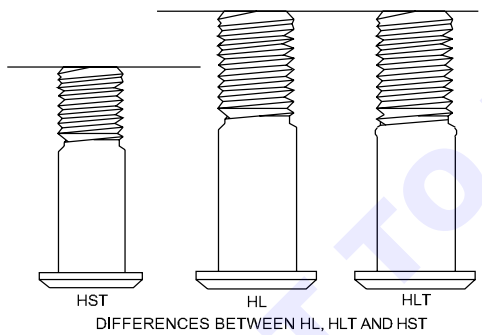

Hi-Tigue™ Fastening System - HLT

The Hi-Tigue™ fastener offers all of the benefits of the Hi-Lok fastening system along with a unique bead design that enhances the fatigue performance of the structure making it ideal for situations that require a controlled interference fit.

These pin rivets have a bead at the transition area. During installation in an interference fit hole, the bead area will cold work the hole.

Hi-Lite™ Fastening System - HST

The Hi-Lite™ fastener is similar in design and principle to the Hi-Lok™ fastener, but the Hi-Lite fastener has a shorter transition area between the shank and the first load-bearing thread. Hi-Lite™ has approximately one less thread.

All Hi-Lite™ fasteners are made of titanium.

These differences reduce the weight of the Hi-Lite fastener without lessening the shear strength.

The Hi-Lite™ collars are also different and thus are not interchangeable with Hi-Lok™ collars.

EN6114 and 6115

These parallel shank fasteners are pin with short thread like Hi-Lite fastening system are used by Airbus industry.

Are made in Titanium alloy, Alloy steel or Inconel 718.

Pin basic part number

Manufacturer part number

HLHLTHST XXX	- 6	- 4
Pin basic part number (see table below for examples)		
Nominal diameter In 1/32 inch		
Maximum grip length In 1/16 inch		

EN part number

EN 61156114	V	6	- 4
Pin part number 6114 > Countersunk 6115 > Universal.			
Material / Finishing code T > Anodized titanium (blue) V > Titanium IVD* (yellow) K > Titanium alloy / aluminium coated B > Titanium alloy sulfuric acid anodizing (blue) + aluminium coatingon threads L > Inconel aluminium coating M > Inconel IVD P > Passivated inconel			
Nominal diameter In 1/16 inch			
Maximum grip length In 1/16 inch			

© NIMI NOT TO BE REPUBLISHED

Common HL. HLT and HST fasteners

Head	Material	HI-LOK			HI-TIGUE			HI-LITE		
		nominal	1/64"oversize	1/32"oversize	nominal	1/64"oversize	1/32"oversize	nominal		
PROTRUDING SHEAR	Titanium	HL10	HL110	HL410	HLT450	HLT434	HLT634	HST10	HST110	HST410
	Steel	HL 18	HL 62	HL 218	HL328*	HLT428	HLT628	HST18	HST118	HST218
	Incoloy A-286	HL 40	HL 140	HL 240	HLT40	HLT140	HLT240	HST40	HST140	HST240
	Aluminum	HL 22	HL 122	HL 258	-	-	-	HST22	HST122	HST222
	Stainless steel	HL 644	HL 744	HL 844	HLT50	HLT150	HLT250	HST644	HST744	HST844
	Inconel	HL 754	HL 936	HL 946	HLT420	HLT620	HLT714	HST52	HST152	HST252
100° FLUSH SHEAR	Titanium	HL 11	HL 111	HL 411	HLT451	HLT435	HLT635	HST11	HST111	HST411
	Steel	HL 19	HL 63	HL 219	HL329*	HLT1001 **	HLT629	HST19	HST119	HST219
	Incoloy A-286	HL 41	HL 141	HL 241	HLT41	HLT141	HLT241	HST41	HST141	HST241
	Aluminum	HL 23	HL 123	HL 259	-	-	-	HST23	HST123	HST223
	Stainless steel	HL 645	HL 751	HL 845	HLT51 *	HLT151 *	HLT251*	HST645	HST745	HST845
	Inconel	HL 701	HL 937	HL947	HLT421	HLT621	HLT715	HST57	HST157	HST257
PROTRUDING TENSION	Titanium	HL 12 HL 1012	HL 112 HL 1022	HL 412 HL 1032	HLT452	HLT436	HLT636	HST12	HST112	HST412
	Steel	HL 20	HL 64	HL 220	HL326*	HLT426	HLT626	HST20	HST120	-
	Incoloy A-286	HL 48	HL 248	HL 748	HLT42	HLT142	HLT242	HST48	HST248	HST748
	Stainless steel	HL 646	HL 746	HL 846	HLT52	HLT152	HLT252	HST646	-	-
	Inconel	HL 730	-	-	HLT422	HLT622	HLT716	HST54	HST154	HST254
100° FLUSH TENSION	Titanium	HL 13 HL 1013	HL 113 HL 1023	HL 413 HL 1033	HLT453	HLT437	HLT637	HST13	HST113	HST413
	Steel	HL 21	HL 65	HL 221	HL327*	HLT427	HLT627	HST21	HST121	-
	Incoloy A-286	HL 49	HL 249	HL 749	HLT43	HLT143	HLT243	HST49	HST249	HST749
	Stainless steel	HL 647	HL 753	HL 847	HLT53 ***	HLT153 ***	HLT253 ***	HST647	-	-
	Inconel	HL 731	HL 939	HL 949	HLT423	HLT623	HLT717	HST59	HST159	HST259

*** : HLT: 100° MS24694 Flush Crown Tension / **: HLT1001 in stainless steel / *: HL in the reference because it was developed before HLT designation

NOT TO BE REPRODUCED © AIMT SOFTWARE

HL/ HLT and HST common collars

Type of collar	Material	HI-LOK / HI-TIGUE			HI-LITE		
		nom	1/64"oversize		nom		
SHEAR	Aluminum 2024 or7075	HL70	HL79	HL84	HST79 HST1070	HST1270	HST84 HST1270
	Stainless steel	HL94 HL1094	HL94 HL1094	HL294	HST1094	HST1094	HST1294 HST1794
	Incoloy A-286	HL97	HL1097	HL197	HST1097	HST97 HST1097	HST197
	Titanium	HL379	HL379	HL491	HST71 HST1071	HST71 HST1071	HST171 HST1771
	CRES Stainless steel	-	-	-	HST74	HST74	HST374
TENSION	Acier Inox	HL86	HL87 HL1087	HL93	HST1087	HST1087	HST1287
	Incoloy A-286	HL78	HL278	HL478	HST78 HST1078	HST78 HST1078	HST178 HST278
	Titanium	HL198	HL198	-	HST1072 HST1572	HST1072	HST1772
	CRES Stainless steel	HL73	HL273	HL373	HST73	HST73	HST373
SHEAR	Aluminum 2024 or 7075	HL82	HL82	HL382	HST82 HST1082	HST182	HST182
	Stainless steel	HL175	HL175	-	HST1076	HST1176 HST1676	HST1176 HST1676
	Incoloy A-286	HL185 HL297	HL185 HL297	-	HST185	HST185	HST185
	Titanium	-	-	-	HST1096	HST1096	

Type of collar		Material	HI-LOK / HI-TIGUE			HI-LITE		
			nom	1/64"oversize		nom		
SHEAR		Aluminum 2024 or 7075	HL374 HL384	HL374 HL384	HL374 HL384	HST771	HST771	-
		Stainless steel	-	-	-	HST1084	HST1084	
	SHEAR	7075	-	-	-	HST1479	Idem	-
	TENSION	Stainless steel	-	-	-	HST1488	Id°	-
	SHEAR	7075	-	-	-	HST1183	Id°	-
	TENSION	Stainless steel	-	-	-	HST1275	Id°	-
	SHEAR.	7075	-	-	-	HST1384	Id°	-
	TENSION	Stainless steel	-	-	-	HST1385	Id°	-

© NIMI NOT TO BE REPUBLISHED

Threaded parallel shank fasteners - Installation, check, removal

Objectives: At the end of this lesson you shall be able to
- **describe how to install threaded parallel shank fasteners**
- **describe how to check threaded parallel shank fasteners**
- **describe how to remove threaded parallel shank fasteners.**

Hole preparation

The straight wall drilled/reamed holes shall be prepared in accordance with manufacturer standard.

The pin has a slight radius under its head. After drilling, deburr the edge of the hole. This permits the head to fully seat in the hole. See appropriate manufacturer standards pages for head radius dimension. (Fig 1)

Fig 1

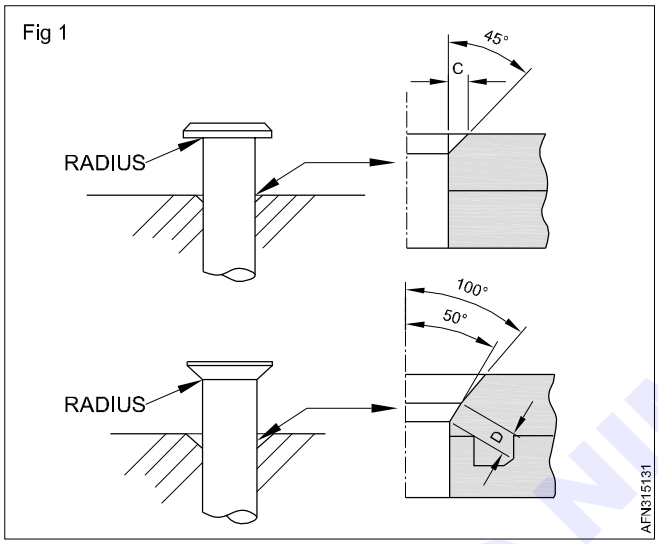

Tooling

These fasteners are rapidly and quietly installed by one person working from one side of the work.

These fasteners may be installed with hand tools. Allen hex keys and open-end or ratchet type wrench.

Selecting the pin grip length

To measure fastener grip length, place the fastener against the gauge as show in Fig 2

Fig 2

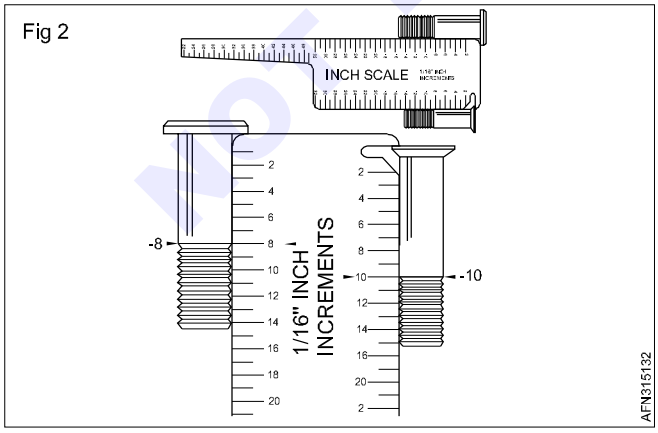

Fastener installation (Fig 3)

Installation of threaded parallel shank pin is accomplished by using the following procedures.

The threaded end of the pin contains a hexagonal shaped recess. The hex wrench tip engages the recess to prevent rotation of the pin while the collar is being installed.

The self-locking, threaded collar has an internal counter bore at the base to accommodate variations in material thickness. At the opposite end of the collars a wrenching device which is torque by the driving tool until its shears off during installation; this shear-off point occurs when a predetermined preload or clamp-up is attained in the fastener during installation.

Fig 3

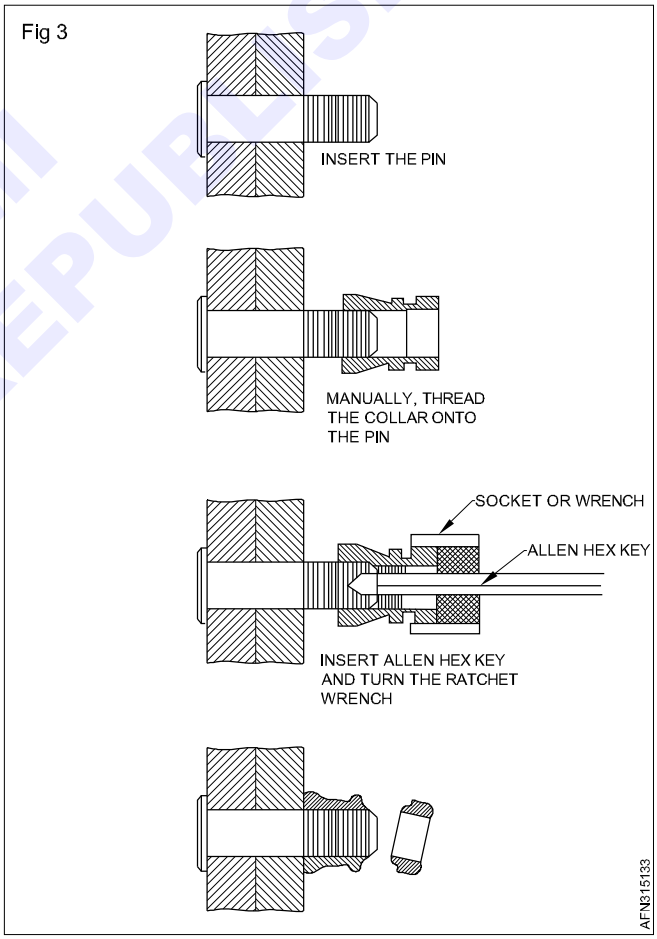

Inspection before installation

- Visual check the fastener, the lubrication, the nut or collar, and the washer.
- Check debarring, trimming or chamfering was done before installation fastener.
- Adequate full grip in the hole (no threads in hole).

© NIMI NOT TO BE REPUBLISHED

For wet installation, visually check before installation of collar/nut that no sealant is on the threads.

Inspection after installation

Threaded parallel shank fasteners are visually inspected:

- Countersink flushness (countersunk head).
- Seating of nut/collars (Fig 4).
- Seating of fastener heads (Fig 5).
- Head deformation (Fig 6).
- Check the pin protrusion with specific gauge (Fig 7).
- Check of nut/collar and head for damage.
- Check of pin head for damage.

Seating of nut/collars (Fig 4)

The gap under the nut/collars shall be checked with the appropriate feeler gauge.

The 0.04mm gap extends less than 25% of circumference and no gaps permitted for the remaining circumference.

Fig 4

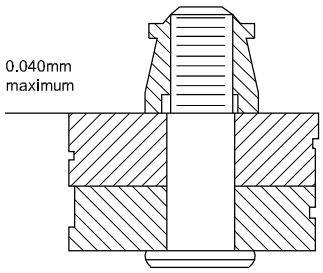

Seating of fastener heads (Fig 5)

The gap under the bolt shall be checked with the appropriate feeler gauge.

Fig 5

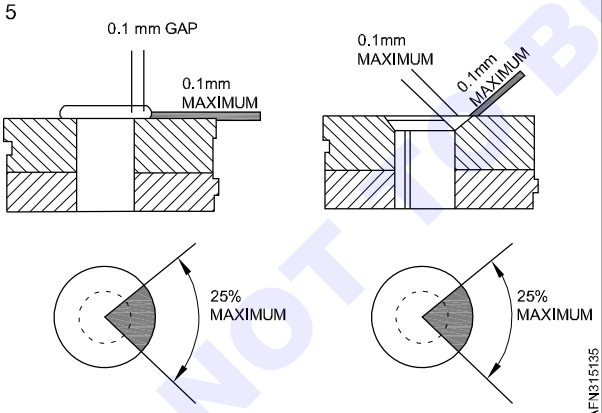

Countersunk head deformation (Fig 6)

It can be checked with a pointer comparator in accordance with manufacturer standard.

Fig 6

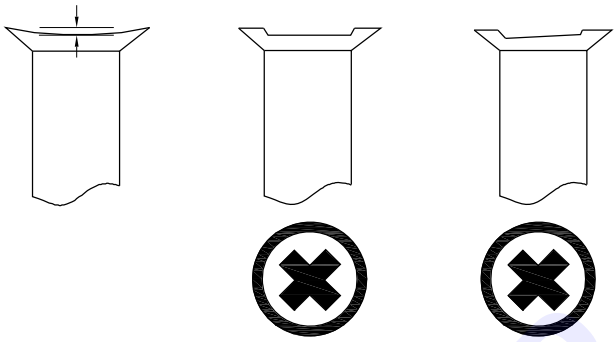

Protrusion check with gauge (Fig 7)

Fig 7

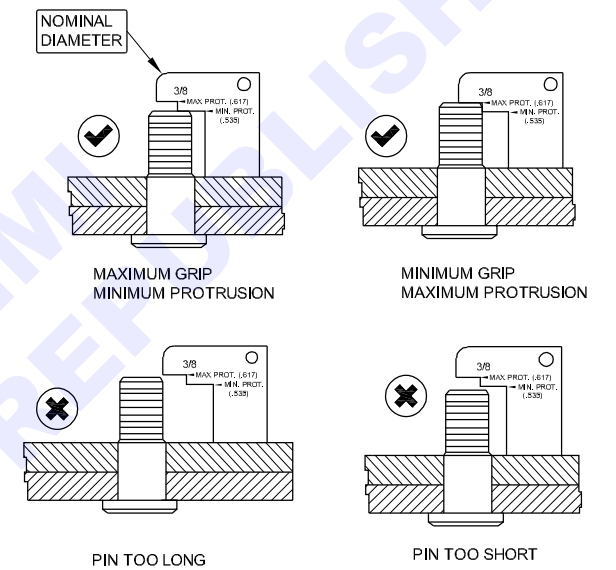

Removal of installed fastener

These fasteners can be removed with common hand tools in a manner similar to removing nut from a bolt. Use an Allen hex wrench to prevent the pin from rotating while the collar is being unscrewed with pliers.

© NIMI NOT TO BE REPUBLISHED

Swaged parallel shank fasteners - Lock bolts

Objectives: At the end of this lesson you shall be able to
- **explain the composition of swaged parallel shank fasteners**
- **understand a designation of swaged parallel shank fasteners.**

A lock bolt is a fastener that has either a collar swaged into annular locking groves on the pin shank or a type of threaded collar to lock it in place. (Fig 1)

Fig 1

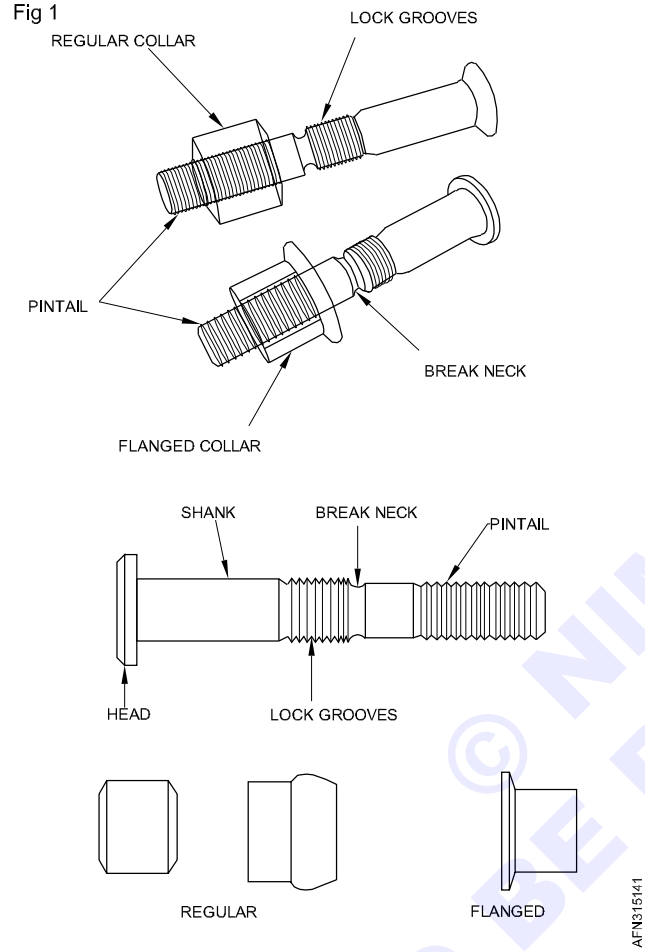

A lock bolt is similar to an ordinary rivet in that the locking collar is weak in tension and it is difficult to remove once installed. When installed, the lock bolt is rigidly and permanently locked in place.

The pull-type lock bolt is mainly used in aircraft and primary and secondary structure. The lock bolt is generally used in wing splice fittings, landing gear fittings, fuel cell fittings, longerons, beams, skin splice plates, and other major structural attachment.

The stump-type lock bolt, although not having the extended stem with pull grooves, is a companion fastener to the pull-type lock bolt. It is used primarily where clearance does not permit effective installation of the pull-type lock bolt. It is driven with a standard pneumatic riveting hammer, with a hammer set attached for swaging the collar into the pin locking grooves, and a bucking bar.

Pins

Available with either countersunk or protruding heads, lock bolts are permanent type fasteners assemblies and consist of a pin and a collar. Lock bolts are made in various head styles, alloys, and finishes (Fig 2).

Fig 2

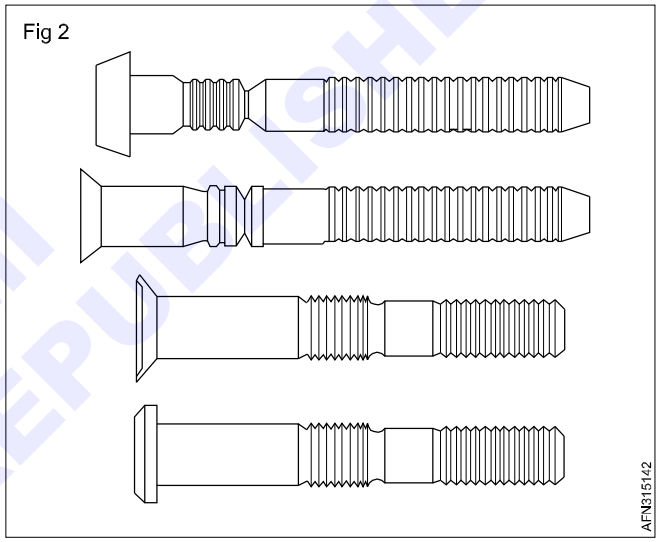

The Lock bolt pin has a slight radius under its head to increase fatigue life. After drilling, deburr the edge of the hole to allow the head to seat fully in the hole. (Fig 3)

Fig 3

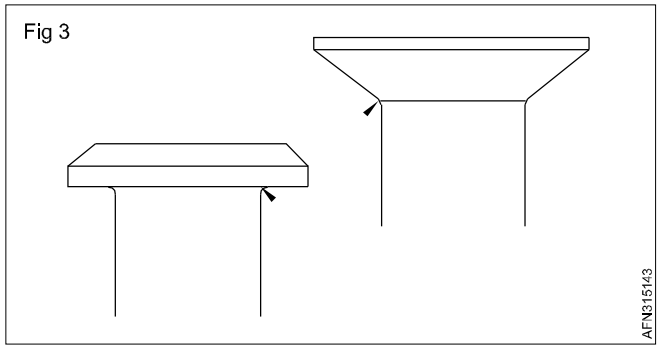

© NIMI NOT TO BE REPUBLISHED

Pin basic part number

Groove Proportioned (GP)

Fig 4

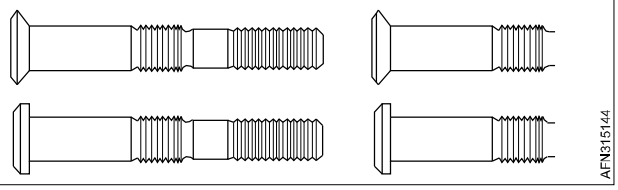

GPL	8TC	- V	06	- 06	AC
GPL: PULL TYPEGPS: STUMP TYPE	3SC: 100° flush shear head 3SP: Protruding shear head 4TC: 100° Shear crown flush tension head 6TC: 100° Shear (MS20426) crown flush tension head 8TC: 100° flush tension head 8TP: Protruding tension head	MATERIAL V: Titanium DT: Alloy steel EU: Stainless steel	DIAMETER CODE - In 1/32"	LENGTH CODE - In 1/16"	Treatment

Pin basic part number

Light Groove Proportioned (LGP)

Fig 5

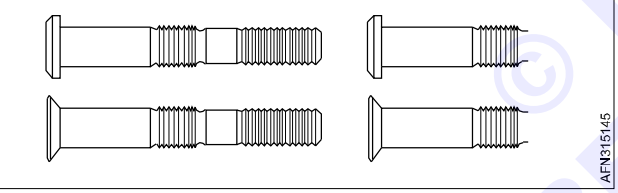

LGPL	2SP	- V	06	- 06	AC
LGPL: PULL TYPELGPS: STUMP TYPE	2SP: Protruding shear head 2SC: 100° crown flush shear head 4SP: Intermediate protruding head 4SC: 100° Intermediate flush head	MATERIALV: TitaniumDT: Alloy steel EU: Stainless steel	DIAMETER CODE - In 1/32	LENGTH CODE - In 1/16"	TREATMENT

© NIMI NOT TO BE REPUBLISHED

Lockbolt NAS standard - Shear

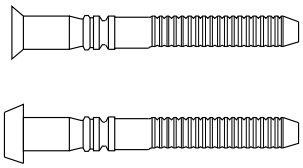

	HEAD	PULL TYPE SHEAR DIAMETER(1/32")					
		-4	-5	-6	-8	-10	-12
STEEL*	CSK	NAS7024	NAS7025	NAS7026	NAS7028	NAS7030	NAS7032
	FLAT	NAS7034	NAS7035	NAS7036	NAS7038	NAS7040	NAS7042
STEEL**	CSK	-	-	NAS1436	NAS1438	NAS1740	NAS1442
	FLAT	-	-	NAS1446	NAS1448	NAS1450	NAS1452
ST. STEEL	CSK	NAS7004	NAS7005	NAS7006	NAS7008	NAS7010	NAS7012
	FLAT	NAS1014	NAS1015	NAS1016	NAS1018	NAS1020	NAS1022
TITAN.	CSK	-	-	NAS2506	NAS2508	NAS2510	NAS2512
	FLAT	-	-	NAS2406	NAS2408	NAS2410	NAS2412

*: 108KSI steel / **: 95KSI steel

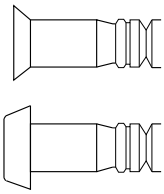

	HEAD	PULL TYPE SHEAR DIAMETER(1/32")					
		-4	-5	-6	-8	-10	-12
STEEL*	CSK	NAS1414	NAS1415	NAS1416	NAS1418	NAS1420	NAS1422
	FLAT	NAS1424	NAS1425	NAS1426	NAS1428	NAS1430	NAS1432
STEEL**	CSK	NAS6974	NAS6975	NAS6976	NAS6978	NAS6980	NAS6982
	FLAT	NAS6984	NAS6985	NAS6986	NAS6988	NAS6990	NAS6992
ST. STEEL	CSK	-	NAS2705	NAS2706	NAS2708	NAS2710	NAS2712
	FLAT	-	NAS2605	NAS2606	NAS2608	NAS2610	NAS2612
TITAN.	CSK	NAS1414	NAS1415	NAS1416	NAS1418	NAS1420	NAS1422
	FLAT	NAS1424	NAS1425	NAS1426	NAS1428	NAS1430	NAS1432

*: 108KSI steel / **: 95KSI steel

© NIMI NOT TO BE REPUBLISHED

Lockbolt NAS standard - Tension

			HEAD	PULL TYPE SHEAR DIAMETER(1/32")				
				-5	-6	-8	-10	-12
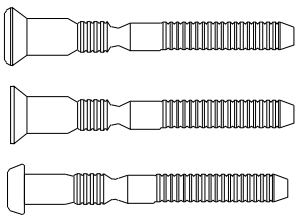	TENSION PULL TYPE	STEEL	CSK *		NAS1456	NAS1458	NAS1460	NAS1462
			CSK **	NAS1475	NAS1476	NAS1478	NAS1480	NAS1482
			FLAT	NAS1465	NAS1466	NAS1468	NAS1470	NAS1472
			ROUND H.	NAS6935	NAS6936	NAS6938	NAS6940	NAS6942
		ST STEEL	CSK *	-	NAS6946	NAS6948	NAS6950	NAS6952
			CSK **	NAS6955	NAS6956	NAS6958	NAS6960	NAS6962
			FLAT	NAS6965	NAS6966	NAS6968	NAS6970	NAS6972
		ALU	CSK *	-	NAS1516	NAS1518	NAS1520	NAS1522
			CSK **	NAS1535	NAS1536	NAS1538	NAS1540	NAS1542
			FLAT	NAS1525	NAS1526	NAS1528	NAS1530	NAS1532
		TITANIUM	CSK *	NAS2105	NAS2106	NAS2108	NAS2110	NAS2112
			CSK **	NAS2115	NAS2116	NAS2118	NAS2120	NAS2122
			FLAT	NAS2005	NAS2006	NAS2008	NAS2010	NAS2012
			ROUND H.	NAS2125	NAS2126	NAS2128	NAS2130	NAS2132
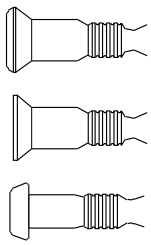	TENSION STUMP TYPE	STEEL	CSK *	-	NAS1486	NAS1488	NAS1490	NAS1492
			CSK **	NAS6925	NAS6926	NAS6928	NAS6930	NAS6932
			FLAT	NAS1497	NAS1496	NAS1498	NAS1500	NAS1502
		ALU	CSK *	-	NAS1546	NAS1548	NAS1550	NAS1552
			CSK **	NAS6915	NAS6916	NAS6918	NAS6920	NAS6922
			FLAT	NAS1555	NAS1556	NAS1558	NAS1560	NAS1562
		TITANIUM	CSK *	-	NAS2306	NAS2308	NAS2310	NAS2312
			CSK **	NAS2315	NAS2316	NAS2318	NAS2320	NAS2322
			FLAT	NAS2205	NAS2206	NAS2208	NAS2210	NAS2212
			ROUND H.	NAS2325	NAS2326	NAS2328	NAS2330	NAS2332

*: CSK head following MS24694 **: CSK head following MS20426

© NIMI NOT TO BE REPUBLISHED

Swaged parallel shank fasteners - Installation, check, removal

Objectives: At the end of this lesson you shall be able to
- **describe how to install pull-type swaged parallel shank fasteners**
- **describe how to check swaged parallel shank fasteners**
- **describe how to remove swaged parallel shank fasteners.**

Hole preparation

The straight wall drilled/reamed holes shall be prepared in accordance with manufacturer standard.

The pin has a slight radius under its head. After drilling, deburr the edge of the hole. This permits the head to fully seat in the hole. See appropriate manufacturer standards pages for head radius dimension. (Fig 1)

Fig 1

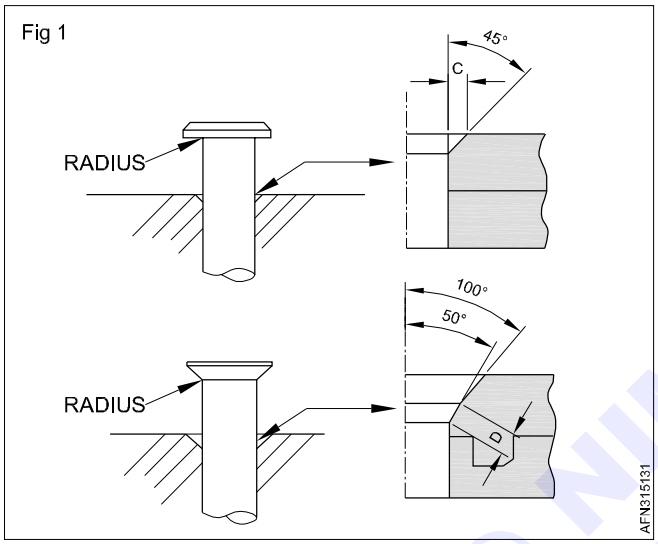

Tooling for pull-type lock bolt (Fig 2)

These fasteners are rapidly and quietly installed by one person working from one side of the work.

The lock bolt pull-type requires a pull riveter for installation and specifics heads.

Fig 2

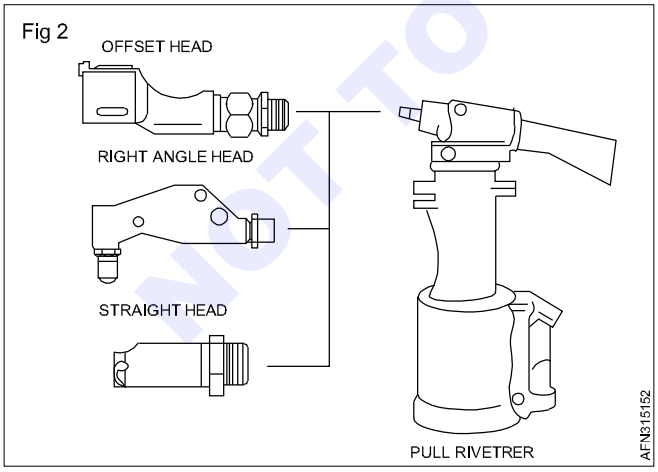

Selecting the pin grip length

To measure fastener grip length, place the fastener against the gauge as show in Fig 3.

Fig 3

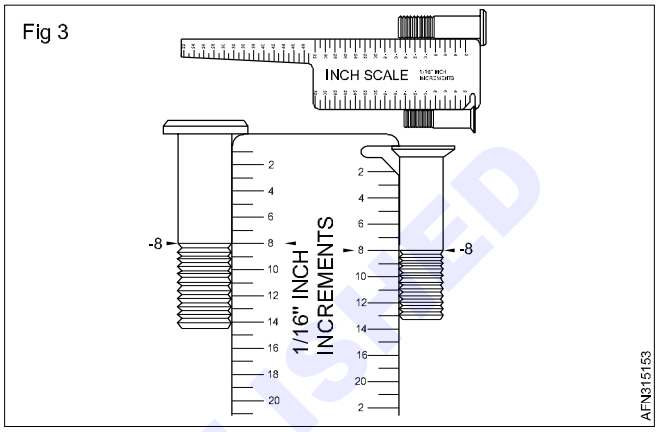

Fastener installation (Fig 4)

Fig 4

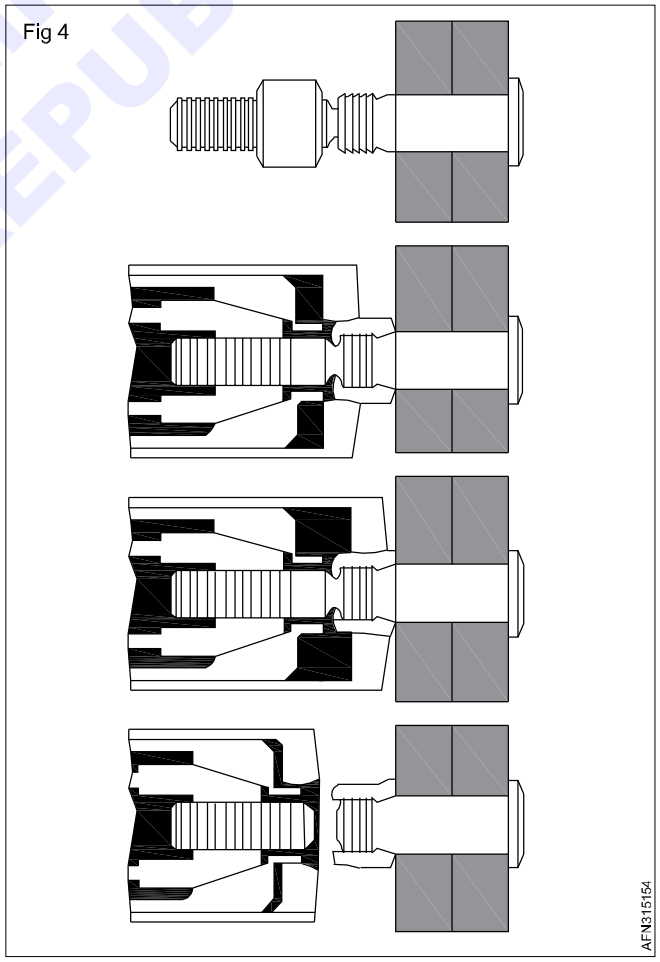

© NIMI NOT TO BE REPUBLISHED

Inspection before installation

- Visual check the fastener, the lubrication, the nut or collar.
- Check debarring, trimming or chamfering was done before installation fastener.
- Adequate full grip in the hole (no groove in hole).

For wet installation, visually check before installation of collar that no sealant is on the pin locking grooves.

Inspection after installation

Swaged parallel shank fasteners are visually inspected:

- Countersink flushness (countersunk head).
- Seating of collars (Fig 5).
- Seating of fastener heads (Fig 5).
- Head deformation (Fig 6).
- Check the pin protrusion with specific gauge (Fig 7).
- Check of collar for damage.
- Check of pin head for damage.

Seating of fastener heads (Fig 5)

The gap under the bolt shall be checked with the appropriate feeler gauge.

Fig 5

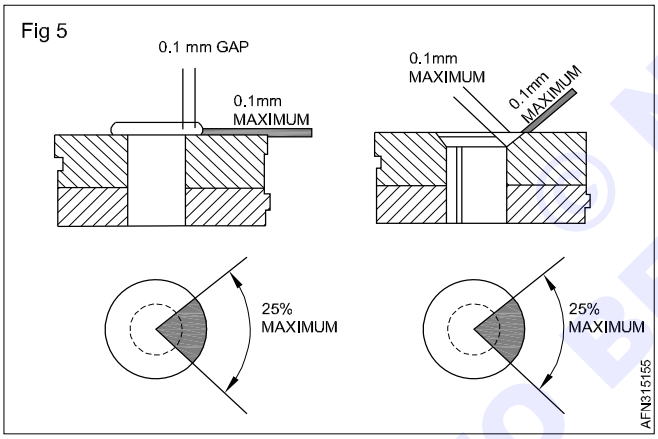

Countersunk head deformation (Fig 6)

It can be checked with a pointer comparator in accordance with manufacturer standard.

Fig 6

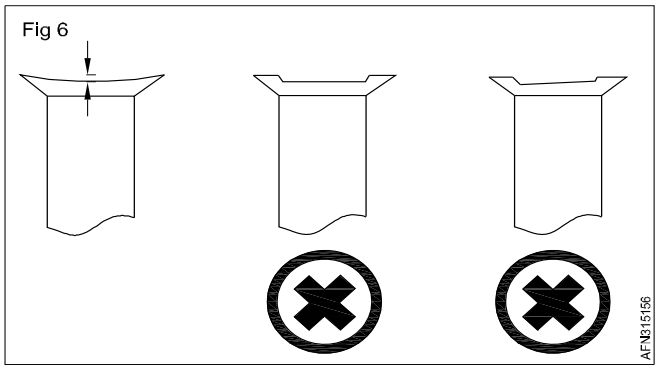

Protrusion check with gauge (Fig 7)

Fig 7

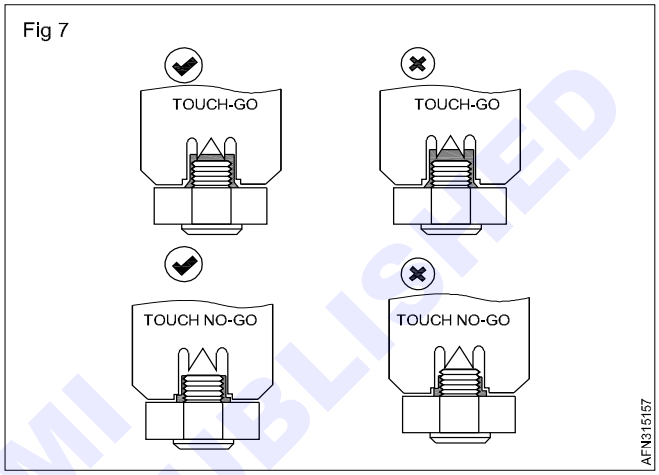

Removal of installed fastener: The best way to remove a lock bolt is to remove the collar and drive out the pin. The collar can be removed with a special bolt cutter type pliers (Fig 7) or small chisel can be used. If you use chisel, put a backup block on the opposite side to prevent elongation of the hole.

Fig 8

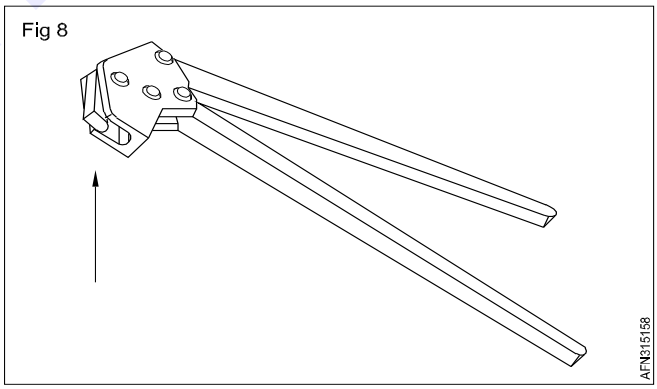

© NIMI NOT TO BE REPUBLISHED

Blind structural fasteners- Pull type - Rivets and bolts

Objectives: At the end of this lesson you shall be able to
- **describe the composition of structural blind pull type fasteners**
- **understand a designation of structural blind pull type fasteners.**

Blind pull-type fasteners- Introduction (Fig 1)

Blind rivets are intended for use where access is limited to one side of the work.

Blind rivets consist of 3 parts:

1 A cylindrical spindle (or mandrel) with a pull stem with pull grooves,

2 A hollow shank or body.

3 A locking ring/collar.

Fig 1

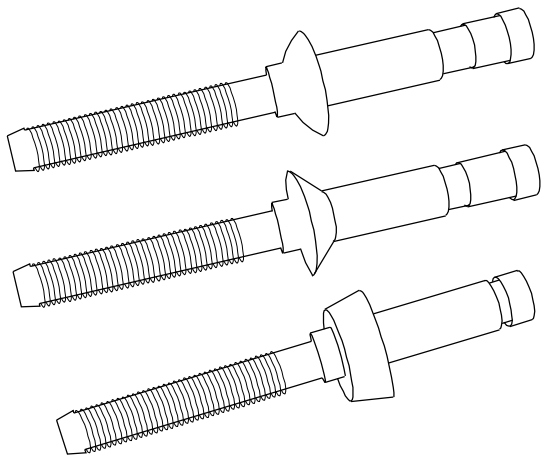

The locking ring can be internal (Fig 2) or external (Fig 3).

Fig 2

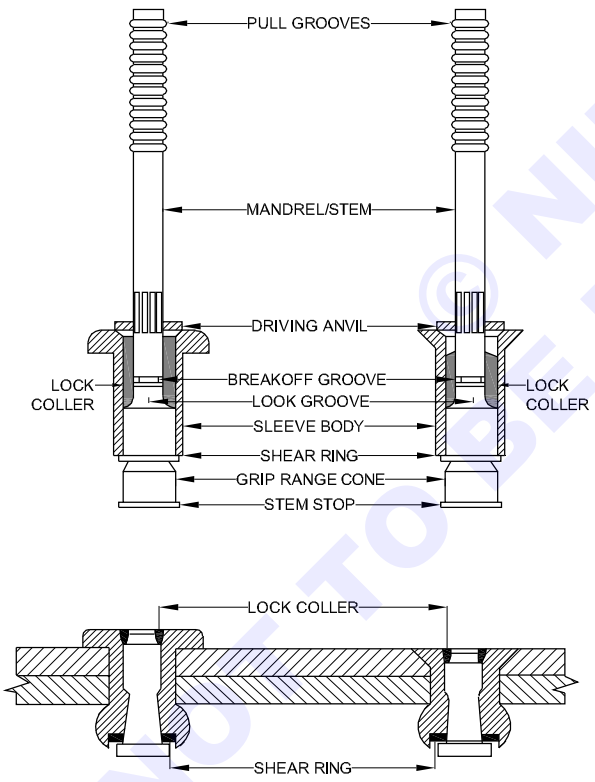

Fig 3

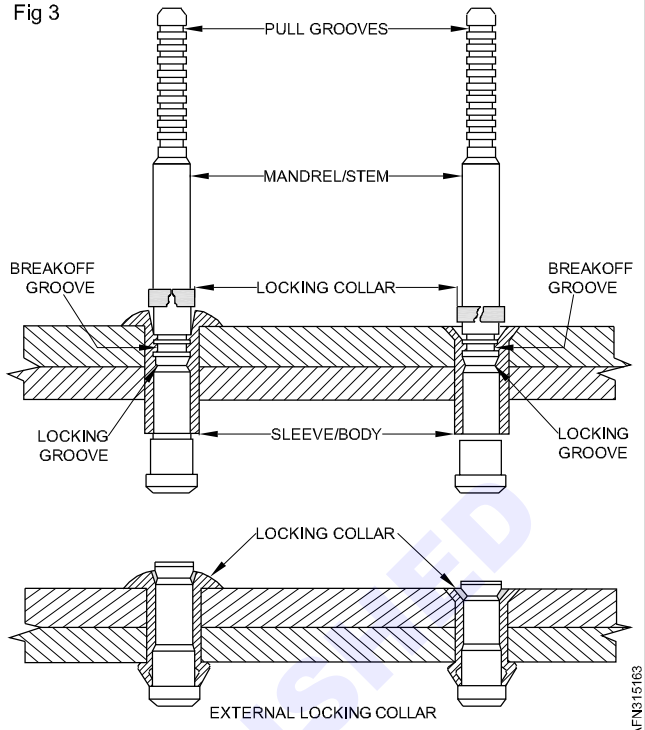

Two forms of expansion on upset side (Fig 4):

- Bulbing: the sleeve of the fastener is compressed, causing it to fold outwards to form a bulb. This form itself tightly against the joint material.

Used for tensile application.

- **Expanding:** pulling on the pintail causes the head of the pin to draw into the sleeve. This expansion causes a footprint to form against the joint material.

Used for shear application.

Do not used with composite materials.

Fig 4

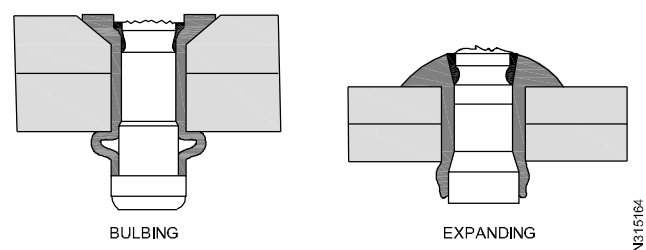

Head marking (Fig 5)

Grip length

The grip range of blind fasteners is in increments of 1/16 inch, with the ultimate dash number indicating the maximum grip in sixteenths.

NOT TO BE REPUBLISHED © NIMI

Example: A -04 grip rivet has a grip range of 3/16 Inch to 1/4 inch.

The grip length can be determined by either a gauge or a table. (Refer "Length determination" Lesson)

Fig 5

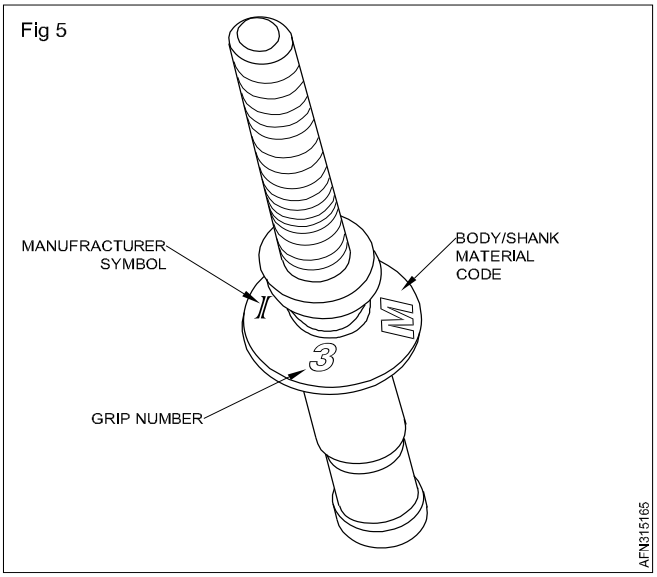

NAS1919 / NAS1921

Fig 6

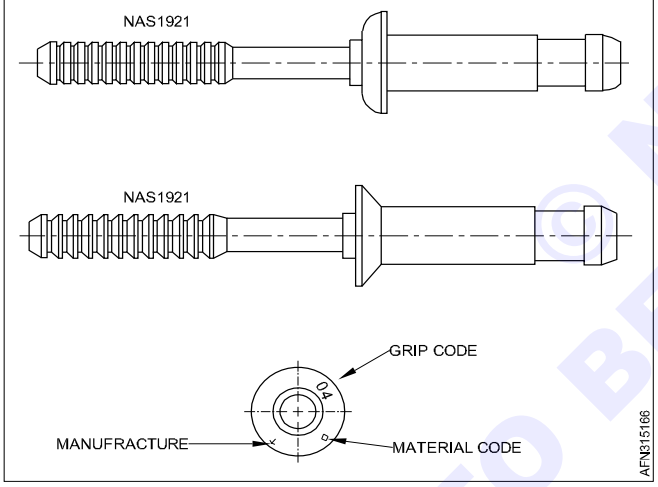

Material code

B Aluminium body

C Stainless steel body

M Monel body

Available diameters

1/8" 5/32" 3/16" 1/4"

Min/max drilling diameters and recommended

Diameter >>	1/8" -4	5/32" -5	3/16" -6	1/4" -8
Min Max	3.277 3.353	4.064 4.165	4.877 4.978	6.502 6.629
Recommended	3.3	4.1	4.9	6.5

Basic part number

NAS1919	M	05	S	04	WU

1919: protruding head
1921: countersunk head

Material code
B - 5056 Aluminum
C - A-286 CRES
M - MONEL

Nominal diameter
In 1/32 inch

Installation Method
S - Single Action Installation
Blank - Double action installation

Maximum grip length in 1/16 inch

Coating codes
Blank - Uncoated
A - Aluminum Coating
FC - Chemical Film
W - Cadmium Plating
U - Optional Drive Washer

Fig 7

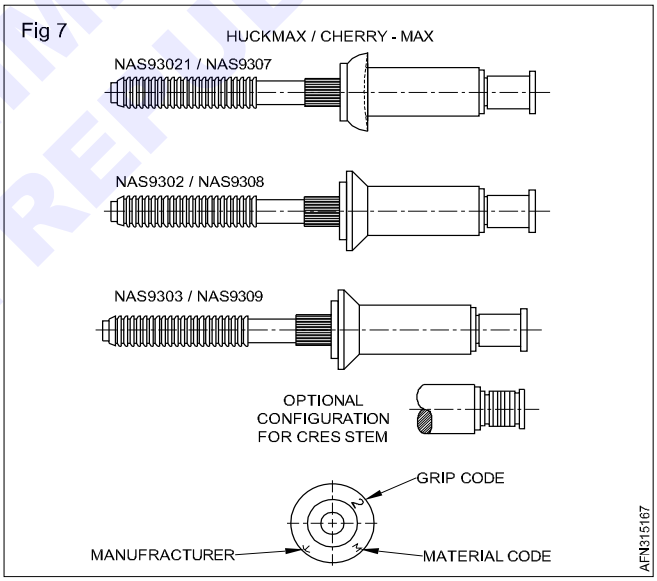

Available diameters

1/8" 5/32" 3/16" 1/4"

Min/max drilling diameters and recommended

	1/8" -4	5/32" -5	3/16" -6	1/4" -8
Min Max	3.277 3.353	4.064 4.165	4.877 4.978	6.502 6.629
Recommended	3.3	4.1	4.9	6.5

© NIMI NOT TO BE REPUBLISHED

Basic part number

NAS0000	B	-05	-04
See Figure			
Material code			
Nominal diameter-In 1/32 inch			
Maximum grip length in 1/16 inch			

Cross-reference list - extract

Cherry	NAS	Body/Stem
CR3213	NAS9301B	ALU/steel
CR3223	NAS9301E	ALU/stainless steel
CR3523	NAS9307	monel/stainless steel
CR3212	NAS9302B	ALU/steel
CR3222	NAS9302E	ALU/stainless steel
CR3522	NAS9308	monel/stainless steel
CR3214	NAS9303B	ALU/steel
CR3224	NAS9303E	ALU/stainless steel
CR3524	NAS9309	monel/stainless steel

Fig 8

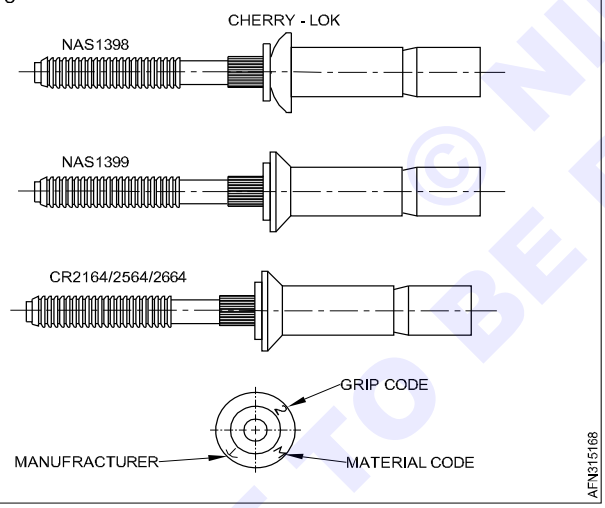

Available diameters

3/32" 1/8" 5/32" 3/16" 1/4"

Min/max drilling diameters and recommended

	1/8" -4	5/32" -5	3/16" -6	1/4" -8
Min Max	3.277 3.353	4.064 4.165	4.877 4.978	6.502 6.629
Recommended	3.3	4.1	4.9	6.5

Basic part number

NAS0000	B	-05	-04
See Figure			
Material code			
Nominal diameter in 1/32 inch			
Maximum grip length in 1/16 inch			

Cherry	NAS	Body/Stem
CR2249	NAS1738B	ALU5056/steel
CR2239	NAS1738E	ALU5056/inconel
CR2539	NAS1738M	monel/inconel
CR2839	NAS1738C	inconel/stainlesssteel
CR2248	NAS1739B	ALU5056/steel
CR2238	NAS1739E	ALU5056/inconel
CR2538	NAS1739M	monel/inconel
CR2838	NAS1739C	inconel/stainlesssteel

Fig 9

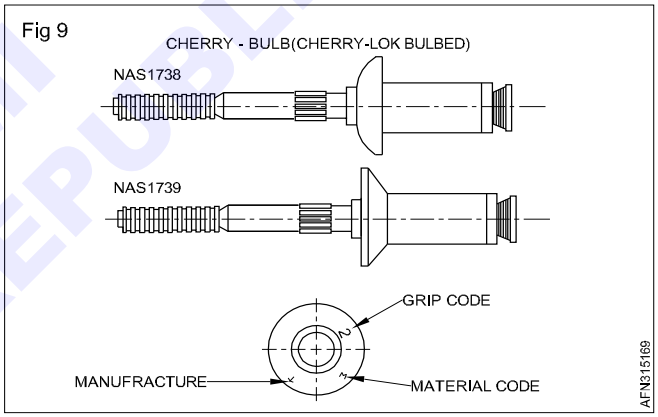

Available diameters

3/32" 1/8" 5/32" 3/16" 1/4"

Min/max drilling diameters and recommended

	3/32" -3	1/8" -4	5/32" -5	3/16" -6	1/4" -8
Min Max	2.464 2.54	3.277 3.353	4.064 4.165	4.877 4.978	6.502 6.629
Recommended	2.5	3.3	4.1	4.9	6.5

Basic part number

NAS0000	B	-05	-04
See Figure			
Material code			
Nominal diameter In 1/32 inch			
Maximum grip length In 1/16 inch			

© NIMI NOT TO BE REPUBLISHED

Cross-reference list - Extract

Cherry	NAS	Body/Stem
CR2249	NAS1738b	ALU5056/STEEL
CR2239	NAS1738e	ALU5056/INCONEL
CR2539	NAS1738m	monel/INCONEL
CR2839	NAS1738c	inconel/STAINLESS STEEL
CR2248	NAS1739b	ALU5056/STEEL
CR2238	NAS1739e	ALU5056/INCONEL
CR2538	NAS1739m	monel/INCONEL
CR2838	NAS1739c	inconel/STAINLESS STEEL

Fig 10

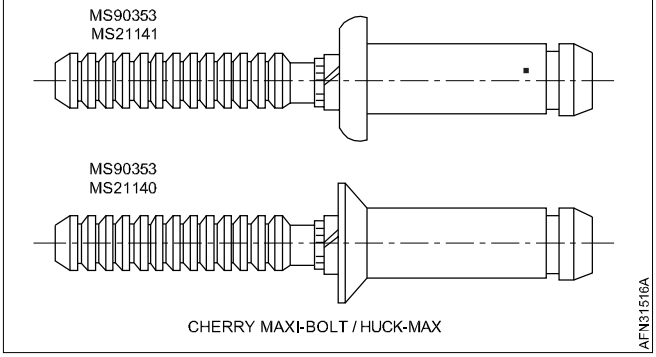

CHERRY MAXI-BOLT / HUCK-MAX

Available diameters

1/8" 5/32" 3/16" 1/4" 5/16"

Min/max drilling diameters and recommended

	1/8" -4	5/32" -5	3/16" -6	1/4" -8	5/16" -10
Min Max	3.277 3.353	4.166 4.242	5.055 5.131	6.604 6.680	7.925 8.000
Recom mended	3.3	4.2	5.1	6.6	7.95

Basic part number

MS00000	**-05**	**-04**
See Figure		
Nominal diameter In 1/32 inch		
Maximum grip length In 1/16 inch		

Cross-reference list - Extract

Cherry	MS	BODY
CR7311	MS90354	STEEL
CR7621	MS21141	STAINLESS STEEL
CR7310	MS90353	STEEL
CR7620	MS21140	STAINLESS STEEL

Blind fasteners - Pull type - Installation, check, removal

Objectives: At the end of this lesson you shall be able to
- **describe how to install pull-type blind fasteners**
- **describe how to check pull-type blind fasteners**
- **describe how to remove pull-type blind fasteners**

Hole preparation

The straight wall drilled/reamed holes shall be prepared in accordance with manufacturer standard.

Sharp edges in back side must only be slightly broken; chamfers must not be made.

The fastener has a slight radius under its head. After drilling, deburr the edge of the hole. This permits the head to fully seat in the hole. See appropriate manufacturer standards pages for head radius dimension.

Tooling for pull-type blind fasteners (Fig 1)

These fasteners are rapidly and quietly installed by one person working from one side of the work.

The blind fasteners pull-type requires a pull riveter for installation and specifics heads.

Fig 1

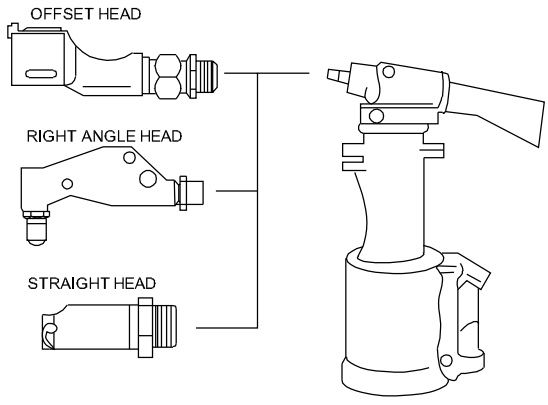

PULL RIVETRER

© NIMI NOT TO BE REPUBLISHED

Inspection before installation

- Visual check the fastener.
- Check deburring, trimming or chamfering was done before installation fastener.
- Adequate full grip in the hole.

For wet installation, visually check before installation that no sealant is on the blind end and on the locking ring.

Installation (Fig 2)

Place the pulling head on the rivet.

Hold the riveter and pulling head in line with the axis of the rivet.

Press firmly against the rivet head.

Apply a steady, firm pressure and pull the trigger. The rivet clamping action will pull the metal sheets together, seat the rivet head, and break the stem flush with the head of the rivet

Fig 2

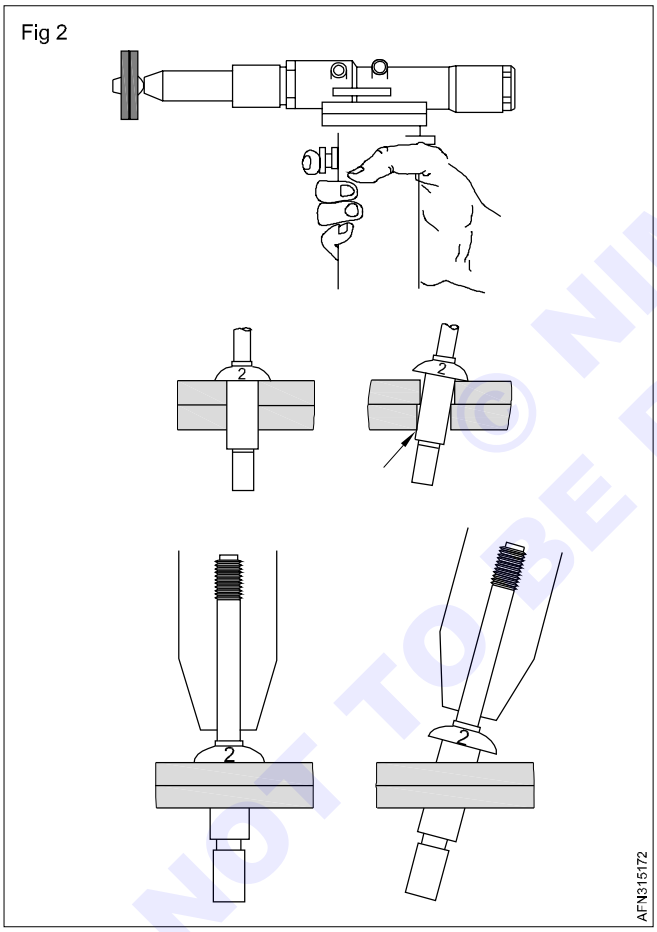

Inspection after installation

Pull-type blind fasteners are visually inspected:

- Countersink flushness (countersunk head).
- Seating of fastener heads.
- Head deformation.
- Upset head forming.
- Check of fastener for damage.

Check stem and ring protrusions:

Fig 3

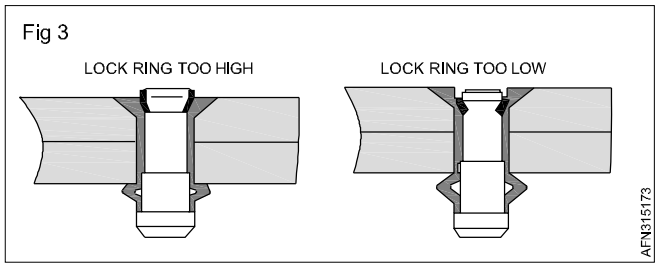

Ring too high

- Gun perpendicularity varied during installation.
- Poor use of gun.
- Tool locking anvil broken, peened over or missing.
- Angle on blind side greater than 5°.

Ring too low

- Gap between sheets too large.
- Grip length above maximum capacity of blind fastener.
- Countersink too shallow.

Fig 4

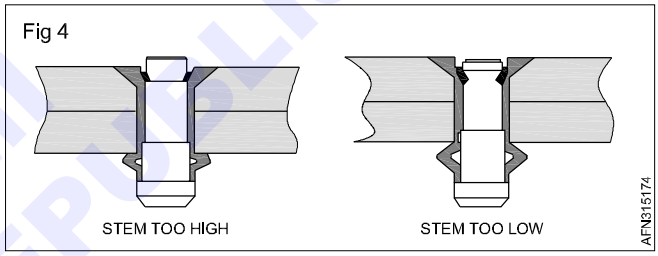

Stem too high

- Hole not within maximum tolerances.
- Fastener grip length too high for parts to be assembled.
- Tool locking anvil broken, peened over or missing.
- Hole excessively deburred or chamfered leading to correct bulb seating on blind side.

Stem too low

- Blind fastener head not in contact at start of installation.
- Fastener grip length too small for parts to be assembled.
- Gap between sheets too large.
- Holes incorrectly aligned.
- Countersink too shallow.
- Angle on blind side greater than 5°.

© NIMI NOT TO BE REPUBLISHED

Removal of installed fastener

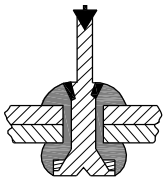

Drill through the fastener head with a small diameter drill (diameter smaller than the locking collar) to point the centre of the fastener.

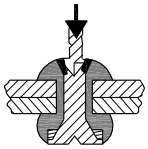

By means of a larger drill (inner diameter of the locking collar) release the stem.

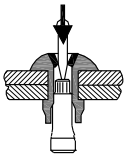

Drive out the rivet stem by means of a tapered drift pin.

Remove the locking collar with a drift pin.

(Note: the locking collar can be removed before driving out the rivet stem as seen in the previous step)

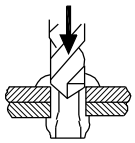

Drill through the head with a drill that has the nominal diameter (minus 0.2 mm recommended).

Do not drill farther than the head to avoid damaging the work piece.

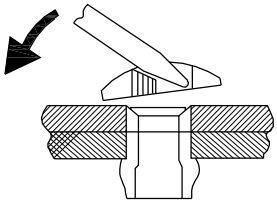

Remove the head by means of a drift pin of the same diameter as the hole.

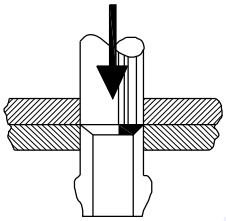

Remove the rest of the fastener with a pin.

Do not hit too hard, the shank must leave easily.

Blind fasteners - Drive nut type

Objectives: At the end of this lesson you shall be able to
- **state the composition of structural blind drive nut type fasteners**
- **explain designation of structural blind drive nut type fasteners.**

Jo-bolt, Visu-lok, Composi-Lok, etc. fasteners use the drive nut concept and are composed of a nut, sleeve, and a draw bolt (or driving flats on the threaded end) which are factory preassembled. (Fig 1)

Fig 1

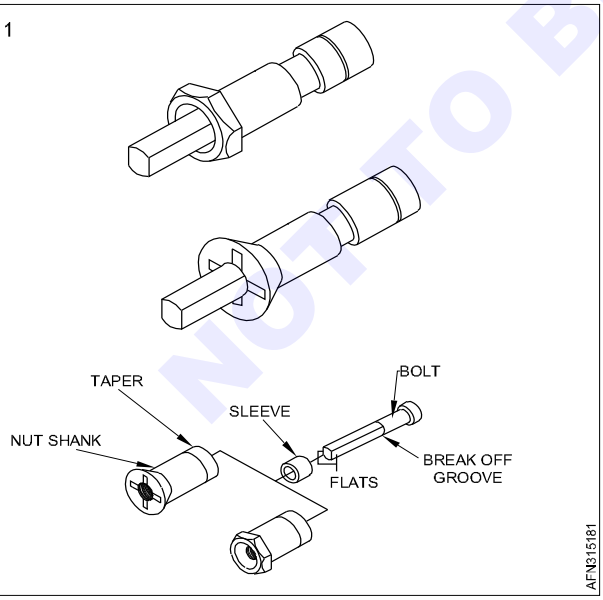

These types of blind bolts are used for high strength applications in metals and composites when there is no access to the blind side.

These types of bolts are available in many different head styles, including 100° flush head and hex head.

The nut and the bolt are made of high-tensile steel, or stainless steel. The sleeve is made of stainless steel.

Jo-Bolt / Visu-Lok

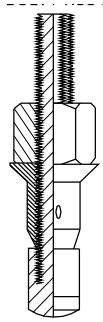

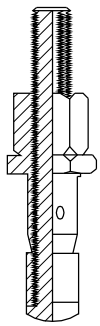

Hexagonal		100 Flush head	
PLT 5210	NAS 1669	PLT 5110	NAS 1670
PLT 5220	NAS 1671	PLT 5120	NAS 1672
PLT 5221	NAS 1763	PLT 5130	NAS 1674
PLT 5211	NAS 1751	PLT 5111	NAS 1750
PLT 5230	NAS 1673	PLT 5121	NAS 1752
PLT 5231	NAS 1755	PLT 5131	NAS 1754

© NIMI NOT TO BE REPUBLISHED

Basic part number

PLT 5	1	1	0	-06	-4

- 5 with drive nut
- 1 countersunk head
  2 hexagonal head
- Material
  1: steel
  2: stainless steel
  3: aluminium
  5: alloy steel
  7: titanium
- Type of shank
  0: nominal
  1: 1/64" oversize
  4: ground shank
- Nominal diameter
  In 1/32 inch
- Grip length
  In 1/16 inch

NAS	1669	06	L	04

- Type and material
- Nominal diameter
  In1/32 inch
- Drive nut
  L: without nut
  DL: with nut
- Grip length In 1/16 inch

Blind fasteners - Drive nut-type - Installation, check, removal

Objectives: At the end of this lesson you shall be able to
- **describe how to install drive nut blind fasteners**
- **describe how to check drive nut blind fasteners**
- **describe how to remove drive nut blind fasteners.**

Hole preparation

The straight wall drilled/reamed holes shall be prepared in accordance with manufacturer standard.

The pin has a slight radius under its head. After drilling, deburr the edge of the hole. This permits the head to fully seat in the hole. See appropriate manufacturer standards pages for head radius dimension.

Tooling

These fasteners are rapidly and quietly installed by one person working from one side of the work.

They are installed with special tooling (powered and hand tooling).

During installation, the nut is held stationary while the core bolt is rotated by the installation tooling. The rotation of the core bolt draws the sleeve into the installed position and continues to retain the sleeve for the life of the fastener. The bolt has left hand threads and driving flats on the threaded end. A break-off relief allows the driving portion of the bolt to break off when the sleeve is properly seated.

Selecting the pin grip length

Use the grip gauge available for the type of fastener and select the bolt grip after careful determination of the material thickness. The grip of the bolt is critical for correct installation.

Fastener installation

Install the fastener into the hole.

The fastener can be pushed easily into a properly prepared hole, and in no case shall a fastener be forced into the hole. A very light tap fit is acceptable in aluminium alloy parts, but not in steel or composite materials.

Place the installation tooling over the stem (bolt) and nut.

In either case, select the correct nose and wrench adapter for the fastener and secure them in the tool body.

Hold the tool firmly against the fastener head and perpendicular to the surface of the work. Failure to hold the tool perpendicular may result in stem break off before the fastener is tight.

The screw continues to advance through the nut body causing the sleeve to be drawn up over the tapered nose of the nut. When the sleeve forms tightly against the blind side of the structure, the screw fractures in the break groove.

Inspection before installation

- Visual check the fastener.
- Check deburring, trimming or chamfering was done before installation fastener.
- Adequate full grip in the hole (no groove in hole).

For wet installation, visually check before installation that no sealant is on the sleeve.

Inspection after installation

Blind bolts are visually inspected:

© NIMI NOT TO BE REPUBLISHED

- Countersink flushness (countersunk head).
- Seating of sleeve.
- Seating of fastener heads.
- Check the stem protrusion with specific gauge (Fig 1).
- Check of fastener for damage.

Collars check (Fig 1)

In areas where the fasteners collars can be seen after installation, they shall be visually inspected.

Fasteners having split or buckled collars shall be rejected.

Fig 1

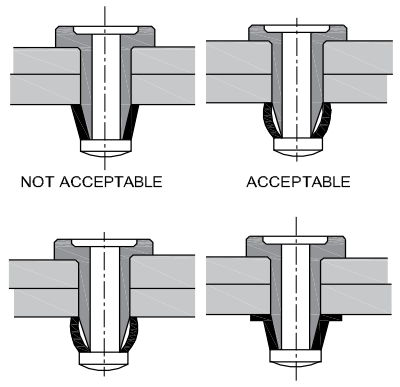

Stems check

Check the stem break-off with the appropriate stem break-off gauge (Fig 2).

If the stem breaks off outside the limits shown, the fastener either is out of grip range or did not drive properly. If the stem breaks off above the limits shown, the fastener is either too long or too loose.

If the stem breaks off lower than the limits shown, the grip is too short.

Fig 2

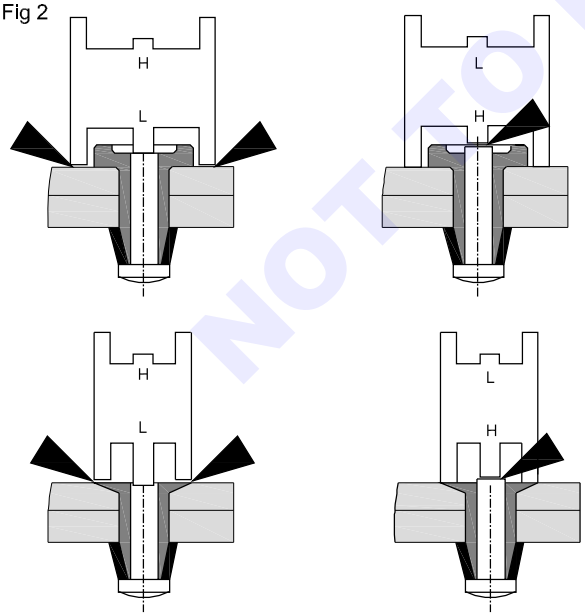

Removal of installed fastener

Blind bolts are difficult to remove due to the hardness of the core bolt. A special removal kit is available from the manufacturer for removing each type of blind bolt. These kits make it easier to remove the blind bolt without damaging the hole and parent structure.

If it is necessary to remove, a drill with a speed of 500 rpm should be used. The procedure depends on whether the fastener is clamped up tight or is loose.

Tight fastener

If the fastener is clamped up tight in the hole, it can be removed by drilling just through the fastener head and then driving out the shank portion with a drift pin, as shown in Fig 3.

Fig 3

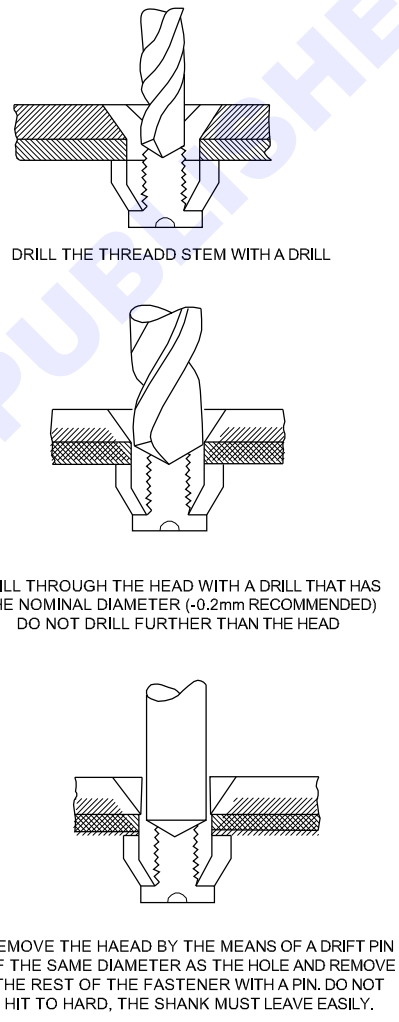

Loose fastener

If the fastener is loose in the hole, it must be prevented from turning by using a drill bushing which can engage the head slots, and a handle or other device to hold it. While holding the fastener to prevent it from turning, drill the bolt portion of the fastener completely out and remove the bolt head and fastener sleeve. After the bolt head and sleeve are removed, pick out the nut portion of the fastener.

© NIMI NOT TO BE REPUBLISHED

Length determination

Objective: At the end of this lesson you shall be able to
- **determin the correct length of a fastener.**

Determining the correct length of the fastener is critical to correct installation.

The grip length of a bolt is the distance from the under-head bearing surface to the first thread.

The grip is the total thickness of material joined by the bolt.

Ideally, the grip length should be a few less than the actual grip to avoid bottoming the nut/collar.

Special grip gauges (Fig 1) are inserted in the hole to determine the length of the fastener to be used. Every fastener system can have its own grip gauge and is not interchangeable with other fastener or rivet systems.

Fig 1

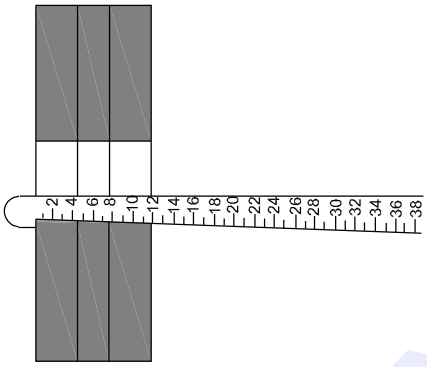

For some fasteners (Jo-Bolt, Maxi-Bolt, Lockbolt tension under NAS standards, etc), the grip gauge related to each type of fastener should be best used, because each specific length code does not exactly correspond to other fasteners. If you do not have both types of gages, the differences related to different types of fasteners should be taken into consideration (Fig 2).

Fig 2

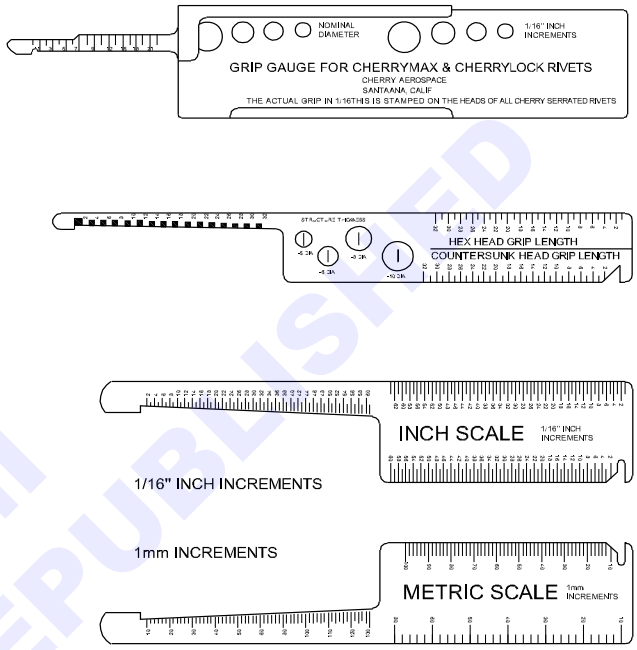

Fig 3

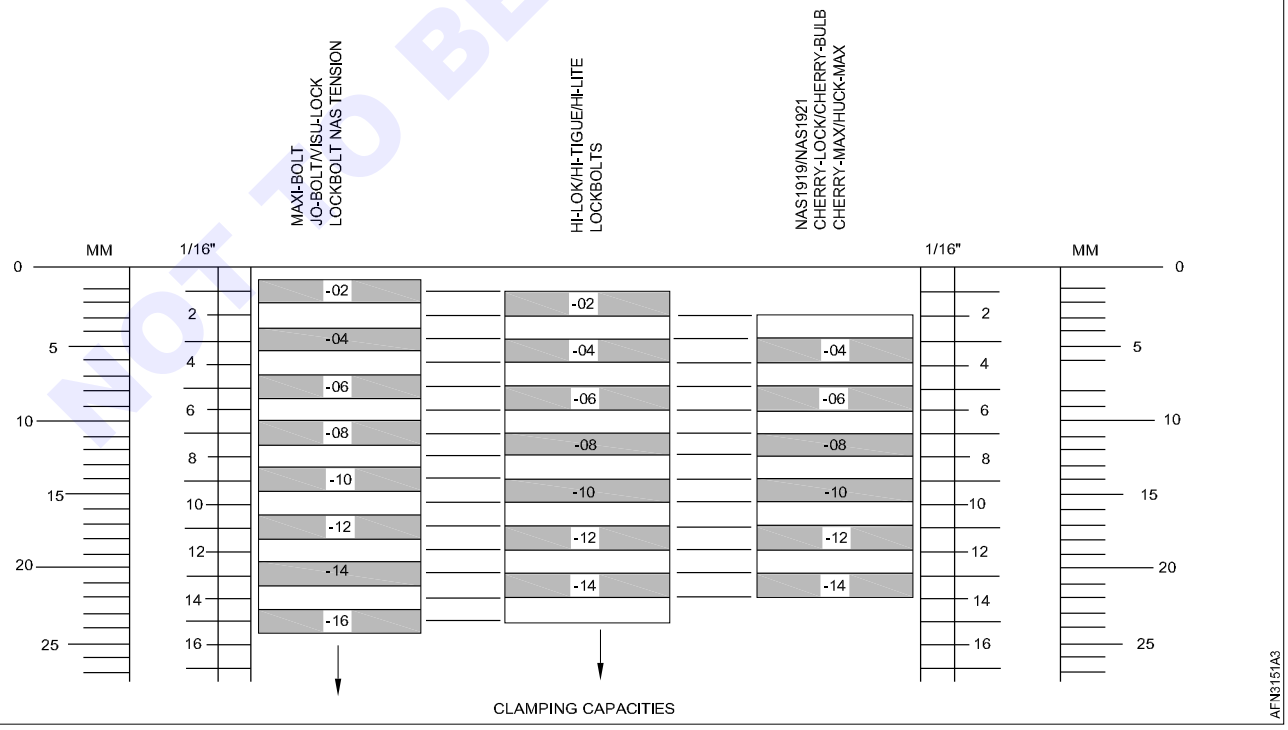

© NIMI NOT TO BE REPUBLISHED

International aviation legislation

Objectives: At the end of this lesson you shall be able to
- **state the content of convention on international civil aviation**
- **describe the role of the international civil aviation organization.**

Convention on International Civil Aviation, also known as Chicago Convention, was signed on 7 December 1944 by 52 States.

Pending ratification of the Convention by 26 States, the Provisional International Civil Aviation Organization (PICAO) was established. It functioned from 6 June 1945 until 4 April 1947.

By 5 March 1947 the 26th ratification was received.

ICAO came into being on 4 April 1947. In October of the same year, ICAO became a specialized agency of the United Nations linked to Economic and Social Council.

The aims and objectives of the Organization are to develop the principles and techniques of international air navigation and to foster the planning and development of international air transport so as to:

1 Insure the safe and orderly growth of international civil aviation throughout the world;

2 Encourage the arts of aircraft design and operation for peaceful purposes;

3 Encourage the development of airways, airports, and air navigation facilities for international civil aviation;

4 Meet the needs of the peoples of the world for safe, regular, efficient and economical air transport;

5 Prevent economic waste caused by unreasonable competition;

6 Insure that the rights of contracting States are fully respected and that every contracting State has a fair opportunity to operate international airlines;

7 Avoid discrimination between contracting States;

8 Promote safety of flight in international air navigation;

9 Promote generally the development of all aspects of international civil aeronautics.

Convention on International Civil Aviation

CONVENTION
ON
INTERNATIONAL
CIVIL AVIATION
DONE
AT CHICAGO
ON THE
1st DAY OF DECEMBER
1994

The Convention on International Civil Aviation set forth the purpose of ICAO:

Whereas the future development of international civil aviation can greatly help to create and preserve friendship and understanding among the nations and peoples of the world, yet its abuse can become a threat to the general security; and

Whereas it is desirable to avoid friction and to promote that co-operation between nations and peoples upon which the peace of the world depends;

Therefore the undersigned governments having agreed on certain principles and arrangements in order that international civil aviation may be developed in a safe and orderly manner and that international air transport services may be established on the basis of equality of opportunity and operated soundly and economically;

Have accordingly concluded this Convention to that end.

Some important articles are:

Part I - Air navigation

Chapter I - General principles and application of the Convention

Article 1 - Sovereignty

The contracting States recognize that every State has complete and exclusive sovereignty over the airspace above its territory.

©NIMI NOT TO BE REPUBLISHED

Article 2 - Territory

For the purposes of this Convention the territory of a State shall be deemed to be the land areas and territorial waters adjacent thereto under the sovereignty, suzerainty, protection or mandate of such State.

Article 3 - Civil and state aircraft

This Convention shall be applicable only to civil aircraft and shall not be applicable to state aircraft.

Aircraft used in military, customs and police services shall be deemed to be state aircraft.

(…)

Chapter II - Flight over territory of Contracting States

(…)

Chapter III - Nationality of aircraft

Article 17 - Nationality of aircraft

Aircraft have the nationality of the State in which they are registered.

Article 18 - Dual registration

An aircraft cannot be validly registered in more than one State, but its registration may be changed from one State to another.

Article 19 - National laws governing registration

The registration or transfer of registration of aircraft in any contracting State shall be made in accordance with its laws and regulations.

Article 20 - Display of marks

Every aircraft engaged in international air navigation shall bear its appropriate nationality and registration marks.

(…)

Chapter IV - Measures to facilitate air navigation

(…)

Article 25 - Aircraft in distress

Each contracting State undertakes to provide such measures of assistance to aircraft in distress in its territory as it may find practicable, and to permit, subject to control by its own authorities, the owners of the aircraft or authorities of the State in which the aircraft is registered to provide such measures of assistance as may be necessitated by the circumstances. Each contracting State, when undertaking search for missing aircraft, will collaborate in coordinated measures which may be recommended from time to time pursuant to this Convention.

Article 26 - Investigation of accidents

In the event of an accident to an aircraft of a contracting State occurring in the territory of another contracting State, and involving death or serious injury, or indicating serious technical defect in the aircraft or air navigation facilities, the State in which the accident occurs will institute an inquiry into the circumstances of the accident, in accordance, so far as its laws permit, with the procedure which may be recommended by the International Civil Aviation Organization. The State in which the aircraft is registered shall be given the opportunity to appoint observers to be present at the inquiry and the State holding the inquiry shall communicate the report and findings in the matter to that State.

Chapter V - Conditions to be fulfilled with respect to aircraft

Article 29 - Documents carried in aircraft

Every aircraft of a contracting State, engaged in international navigation, shall carry the following documents in conformity with the conditions prescribed in this Convention:

1 Its certificate of registration;

2 Its certificate of airworthiness;

3 The appropriate licenses for each member of the crew;

4 Its journey log book;

5 If it is equipped with radio apparatus, the aircraft radio station license;

6 If it carries passengers, a list of their names and places of embarkation and destination;

7 If it carries cargo, a manifest and detailed declarations of the cargo.

Article 30 - Aircraft radio equipment

- Aircraft of each contracting State may, in or over the territory of other contracting States, carry radio transmitting apparatus only if a license to install and operate such apparatus has been issued by the appropriate authorities of the State in which the aircraft is registered. The use of radio transmitting apparatus in the territory of the contracting State whose territory is flown over shall be in accordance with the regulations prescribed by that State.
- Radio transmitting apparatus may be used only by members of the flight crew who are provided with a special license for the purpose, issued by the appropriate authorities of the State in which the aircraft is registered.

Article 31 - Certificates of airworthiness

Every aircraft engaged in international navigation shall be provided with a certificate of airworthiness issued or rendered valid by the State in which it is registered.

Article 32 - Licenses of personnel

- The pilot of every aircraft and the other members of the operating crew of every aircraft engaged in international navigation shall be provided with certificates of competency and licenses issued or rendered valid by the State in which the aircraft is registered.
- Each contracting State reserves the right to refuse to recognize, for the purpose of flight above its own territory, certificates of competency and licenses granted to any of its nationals by another contracting State.

© NIMI NOT TO BE REPUBLISHED

Article 33 - Recognition of certificates and licenses

Certificates of airworthiness and certificates of competency and licenses issued or rendered valid by the contracting State in which the aircraft is registered, shall be recognized as valid by the other contracting States, provided that the requirements under which such certificates or licenses were issued or rendered valid are equal to or above the minimum standards which may be established from time to time pursuant to this Convention.

Chapter VI - International standards and recommended practices

Article 37 - Adoption of international standards and procedures

Each contracting State undertakes to collaborate in securing the highest practicable degree of uniformity in regulations, standards, procedures, and organization in relation to aircraft, personnel, airways and auxiliary services in all matters in which such uniformity will facilitate and improve air navigation.

To this end the International Civil Aviation Organization shall adopt and amend from time to time, as may be necessary, international standards and recommended practices and procedures dealing with:

- Communications systems and air navigation aids, including ground marking;
- Characteristics of airports and landing areas;
- Rules of the air and air traffic control practices;
- Licensing of operating and mechanical personnel;
- Airworthiness of aircraft;
- Registration and identification of aircraft;
- Collection and exchange of meteorological information;
- Log books;
- Aeronautical maps and charts;
- Customs and immigration procedures;
- Aircraft in distress and investigation of accidents;

  and such other matters concerned with the safety, regularity, and efficiency of air navigation as may from time to time appear appropriate.

Article 38 - Departures from international standards and procedures

Any State which finds it impracticable to comply in all respects with any such international standard or procedure, or to bring its own regulations or practices into full accord with any international standard or procedure after amendment of the latter, or which deems it necessary to adopt regulations or practices differing in any particular respect from those established by an international standard, shall give immediate notification to the International Civil Aviation Organization of the differences between its own practice and that established by the international standard. In the case of amendments to international standards, any State which does not make the appropriate amendments to its own regulations or practices shall give notice to the Council within sixty days of the adoption of the amendment to the international standard, or indicate the action which it proposes to take. In any such case, the Council shall make immediate notification to all other states of the difference which exists between one or more features of an international standard and the corresponding national practice of that State.

Article 39 - Endorsement of certificates and licenses

- Any aircraft or part thereof with respect to which there exists an international standard of airworthiness or performance, and which failed in any respect to satisfy that standard at the time of its certification, shall have endorsed on or attached to its airworthiness certificate a complete enumeration of the details in respect of which it so failed.
- Any person holding a license who does not satisfy in full the conditions laid down in the international standard relating to the class of license or certificate which he holds shall have endorsed on or attached to his license a complete enumeration of the particulars in which he does not satisfy such conditions.

Article 40 - Validity of endorsed certificates and licenses

No aircraft or personnel having certificates or licenses so endorsed shall participate in international navigation, except with the permission of the State or States whose territory is entered. The registration or use of any such aircraft, or of any certificated aircraft part, in any State other than that in which it was originally certificated shall be at the discretion of the State into which the aircraft or part is imported.

Article 41 - Recognition of existing standards of airworthiness

The provisions of this Chapter shall not apply to aircraft and aircraft equipment of types of which the prototype is submitted to the appropriate national authorities for certification prior to a date three years after the date of adoption of an international standard of airworthiness for such equipment.

Article 42 - Recognition of existing standards of competency of personnel

The provisions of this Chapter shall not apply to personnel whose licenses are originally issued prior to a date one year after initial adoption of an international standard of qualification for such personnel; but they shall in any case apply to all personnel whose licenses remain valid five years after the date of adoption of such standard.

Part II - The International Civil Aviation Organization

Chapter VII - The Organization

Chapter VIII - The Assembly

Chapter IX - The Council

Chapter X - The Air Navigation Commission

Chapter XI - Personnel

© NIMI NOT TO BE REPUBLISHED

Chapter XII - Finance

Chapter XIII - Other international arrangements

Chapter XIV - Information and reports

Chapter XV - Airports and other air navigation facilities

Chapter XVI - Joint operating organizations and pooled services

Chapter XVII - Other aeronautical agreements and arrangements

Chapter XVIII - Disputes and default

Directorate general of civil aviation of India

Objective: At the end of this lesson you shall be able to
- **describe the rules of directorate general of civil aviation.**

नागर विमानन महानिदेशालय
DIRECTORATE GENERAL OF CIVIL AVIATION

Directorate General of Civil Aviation is an attached office of the Ministry of Civil Aviation.

The Directorate General of Civil Aviation is the regulatory body in the field of Civil Aviation primarily dealing with safety issues. It is responsible for regulation of air transport services to/from/within India and for enforcement of civil air regulations, air safety and airworthiness standards. It also co-ordinates all regulatory functions with International Civil Aviation Organisation.

The headquarters are located in New Delhi with regional offices in the various parts of India.

The Government of India is planning to replace the organisation with a Civil Aviation Authority (CAA), modelled on the lines of the European Union Aviation Safety Agency (EASA) and American Federal Aviation Administration (FAA).

DGCA Headquarters

Director General of civil aviation

AIR Transport	Legal affairs
Personnel licensing	State safety programme
Flying training and sports	International cooperation
AIR craft certification	Investigation and prevention
Continuing airworthiness	Surveillance and enforcement
AIR craft operations	Information technology
Aerodromes and ground aids	Administration
AIR navigation services	Training

Departments of DGCA

- Administration Directorate
- Aerodrome Standards Directorate (AD)
- Air Safety Directorate (DAS)
- Air Transport Directorate (AT)
- Airworthiness Directorate (DAW) (which is also responsible for registering drones in India)
- Flight Standards Directorate (FSD)
- Information & Regulation Directorate (DRI)
- Aircraft Engineering Directorate (AED)
- Directorate Of Flying Training (DFT)
- Medical Section
- Directorate of Training & Licensing (DTL)
- Directorate of Airspace and Air Navigation Services Standards (ANSS)

Functions of DGCA

- Registration of civil aircraft
- Certification of airports
- Licensing of pilots, aircraft maintenance engineers, air traffic controllers and flight engineers, and conducting examinations and checks for that purpose
- Carrying out amendments to the Aircraft Act, the Aircraft Rules and the Civil Aviation Requirements for complying with the amendments to ICAO Annexes, and initiating proposals for amendment to any other Act or for passing a new Act in order to give effect to an international Convention or amendment to an existing convention.
- Formulation of standards of airworthiness for civil aircraft registered in India and grant of certificates of airworthiness to such aircraft
- Conducting investigation into incidents and serious incidents involving aircraft up to 2250 kg AUW and taking accident prevention measures, including formulation of implementation of Safety Aviation Management Programmes
- Checks on the proficiency of flight crew and other operational personnel such as flight dispatchers and cabin crew

© NIMI NOT TO BE REPUBLISHED

- Coordination of ICAO matters with all agencies, sending replies to State letters, and taking all necessary action arising out of the Universal Safety Oversight Audit Programme (USOAP) of ICAO.
- Granting Air Operator's Certificates to Indian carriers and regulation of air transport services operating to/ from/within/over India by Indian and foreign operators, including clearance of scheduled and non-scheduled flights of such operators
- Approval of institutes engaged in flying training including simulator training, AME training, air traffic services training or any other training related with aviation, with a view to ensuring a high quality of training
- Approval to aircraft maintenance, repair, design and manufacturing organizations and their continued oversight
- A nodal agency for implementing Annex 9 provisions in India and for coordinating matters relating to facilitation at Indian airports, including holding meetings of the National Facilitation Committee DGCA Organisation Manual
- Rendering advice to the Government on matters relating to air transport including bilateral air services agreements, on ICAO matters and generally on all technical matters relating to civil aviation, and to act as an overall regulatory and developmental body for civil aviation in the country
- Keeping a check on aircraft noise and engine emissions in accordance with ICAO Annex 16 and collaborating with the environmental authorities in this matter, if required
- Regulation and oversight of matters related to Air Navigation Services. Coordination at national level for flexi-use of air space by civil and military air traffic agencies and interaction with ICAO for provision of more air routes for civil use through Indian airspace
- Promoting indigenous design and manufacture of aircraft and aircraft components by acting as a catalytic agent
- Approving training programmes of operators for carriage of dangerous goods, issuing authorizations for carriage of dangerous goods, etc.
- Safety Oversight of all entities approved/ certified/ licensed under the Aircraft Rules 1937.

Civil aviation regulation

Objectives: At the end of this lesson you shall be able to
- **state the role of CAR-21**
- **state the role of CAR-M**
- **state the role of CAR-145**
- **state the role of CAR-147.**

CAR-21

Certification procedures for aircraft and related products and parts

CAR21 prescribes procedural requirements for issue of type certificates and changes to these certificates, issue of certificate of airworthiness, issue of noise certificate and issue of export airworthiness certificate. It covers matters related to design, manufacture and all other issues related to airworthiness including continued airworthiness, repairs, etc.

CIVIL AVIATION
REQUIREMENTS
CAR 21
CERTIFICATION PROCEDURES FOR
AIRCRAFT AND RELATED
PRODUCTS AND PARTS
ISSUE II (Revision 3)
24th April 2015
Director General of civil Aviation
OFFICE OF THE DIRECTOR GENERAL OF CIVIL AVIATION
TECHNICAL CENTRE OPP SAFDARJUNG AIRPORT. NEW DELHI

CAR 21 also contains requirements for approval of design and production organisations.

Subpart b

Type-certificates and restricted type- certificates

This Subpart establishes the procedure for issuing type-certificates for products and restricted type-certificates for aircraft and establishes the rights and obligations of the applicants for, and holders of, those certificates.

Subpart F

Production without production organisation approval

This Subpart establishes the procedure for demonstrating the conformity with the applicable design data of a product, part and appliance that is intended to be manufactured without a production organization approval under Subpart G.

This Subpart establishes the rules governing the obligations of the manufacturer of a product, part, or appliance being manufactured under this Subpart.

Subpart G

Production organisation approval for products, parts and appliances

The procedure for the issuance of a production organization approval for a production organization showing conformity

© NIMI NOT TO BE REPUBLISHED

of products, parts and appliances with the applicable design data.

Subpart H

Airworthiness certificates, restricted certificates of airworthiness and export certificates of airworthiness

This Subpart prescribes procedural requirements for the issue of Certificates of Airworthiness, Restricted Certificates of Airworthiness, Export Certificate of Airworthiness for new aircraft manufactured/assembled in India only.

Subpart JA

Design organisation approval- products or changes to products

This Subpart establishes the procedure for the approval of design organizations designing products, changes to products thereto and rules governing the rights and obligations of applicants for, and holders of, such approvals.

Subpart JB

Design organisation approval- parts & appliances

This Subpart prescribes procedural requirements for the approval of design organizations designing parts and appliances or changes thereto and requirements governing the holders of such approvals.

Subpart k

Parts and appliances

This Subpart establishes the procedure relating to the approval of parts and appliances.

Subpart M

Repairs

- This Subpart establishes the procedure for the approval of repair design, and establishes the rights and obligations of the applicants for, and holders of, those approvals.
- A 'repair' means elimination of damage and/or restoration to an airworthy condition following initial release into service by the manufacturer of any product, part or appliance.
- Elimination of damage by replacement of parts or appliances without the necessity for design activity shall be considered as a maintenance task and shall therefore require no approval under this Part.

Subpart O

Indian technical standard order authorisations

This Subpart establishes the procedure for issuing Indian Technical Standard Order authorization and the rules governing the rights and obligations of applicants for, or holders of, such authorizations.

Subpart Q

Identification of products, parts and appliances

The identification of products shall include the following information:

- Manufacturer's name.
- Product designation.
- Manufacturer's Serial number.
- Any other information DGCA finds appropriate.

CAR-M

Continuing airworthiness requirements

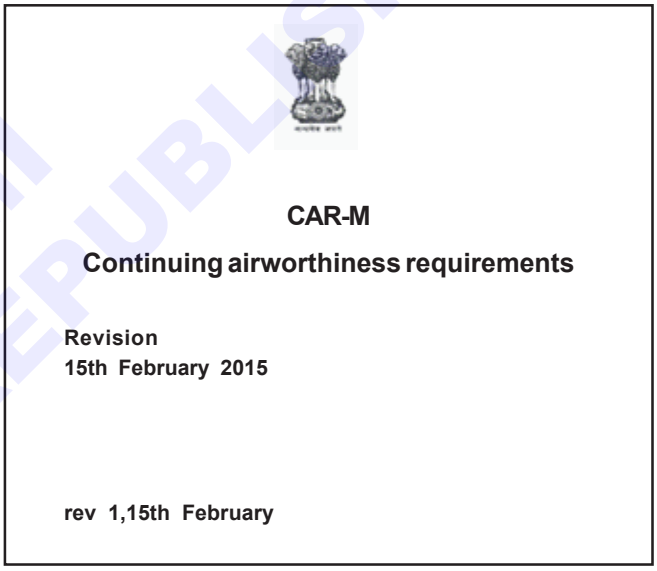

CAR-M specifies certain technical requirements to be complied by organisations and personnel involved in the maintenance of aircraft and aeronautical products, parts and appliances in order to demonstrate the capability and means of discharging the obligations and associated privileges thereof. The CAR-M also specifies conditions of issuing, maintaining, amending, suspending or revoking certificates attesting such compliance.

CAR-M establishes common technical requirements and administrative procedures for ensuring the continuing airworthiness of aircraft, including any component for installation thereto, which are registered in India; or registered in a foreign country and used by an Indian operator for which India ensures oversight of operations.

© NIMI NOT TO BE REPUBLISHED

CAR-145

Approval of maintenance organisations

CIVIL
AVIATION
REQUIREMENTS

CAR – 145

APPROVAL OF MAINTENANCE
ORGANISATIONS

Issue 02
08th October 2013

OFFICE OF THE DIRECTOR GENERAL OF CIVIL AVIATION
TECHNICAL CENTRE OPP SAFDURJUNG AIRPORT, NEW DELHI-
110003

Rules for the maintenance organisations that carry out the maintenance works on aircraft and components (including engines).

CAR-145 Rev.0 was introduced on 26th January 2005 in order to harmonize requirements for approval of aircraft maintenance organizations with that of international requirements, which was primarily based on EASA Part-145 regulation.

Since the initial issue of CAR-145, it has been revised from time to time to synchronize with EASA Part-145.

CAR-147

Approved maintenance training organisation

GOVERNMENT OF INDIA DIRECTORATE GENERAL OF
CIVIL AVIATION OPP. SAFDARJUNG AIRPORT, NEW
DELH 1 - 110 003

CAR – 147

APPROVED MAINTENANCE TRAINING
ORGANISATIONS

(TYPE TRAINING)

Issue 1, Revision 0
19th September, 2014

CAR-147 specifies the requirements to be met by organizations seeking approval to conduct type training and examination as specified in CAR-66.

The CAR-147 specifies conditions for issue, renewal, suspension and revocation of certificates attached to the approval and privileges thereof.

This CAR provides the technical standards and guidelines for the approval of aircraft maintenance type training organizations.

© NIMI NOT TO BE REPUBLISHED

Aircraft description - ATA standard and ATA list

Objectives: At the end of this lesson you shall be able to
- **state the ATA numbering system**
- **state the main system chapters.**

ATA Spec 100 and iSpec 2200

ATA Spec 100 and iSpec 2200 are information standards for aviation maintenance and flight operations published by Airlines for America (formerly Air Transport Association of America).

These standards provide recommended specifications for the content, structure and deliverables to meet communication requirements of aircraft

This specification defines a widely used numbering scheme for aircraft parts and the appearance of printed aircraft maintenance information. The Federal Aviation Administration's JASC (Joint Aircraft System/Component) code table provides a modified version of ATA Spec 100.

ATA Spec 100 contains format and content guidelines for technical manuals written by aviation manufacturers and is used by airlines and other segments of the industry in the maintenance of their respective products. This document provides the industrywide standard for aircraft systems numbering, often referred to as the ATA system or ATA chapter numbers. The format and content guidelines define the data prepared as conventional printed documentation. In 2000 ATA Spec 100 and ATA Spec 2100 were incorporated into ATA iSpec 2200: Information Standards for Aviation Maintenance. ATA Spec 100 and Spec 2100 will not be updated beyond the 1999 revision level.

ATA numbering system

ATA 100 numbering system uses an identification code that has six numbers divides the chapter into its related parts. This is identification code is divided into three elements. Each element contains two number. The code divides the data into:

- Chapter/ System (First element)
- Section/ Sub-system (Second element)
- Subject/ Unit (Third element)

21	30	00
Chapter	Section	Subject
> System	> Sub-system	> Unit

System chapter	Sub system section	Title and definition
1		RESERVED FOR AIRLINE USE
2		RESERVED FOR AIR LINEUSE
3		RESERVED FOR AIR LINEUSE
4		RESERVED FOR AIR LINEUSE
5		TIME LIMITS/MAINTENANCE CHECKS Manufacturers' recommended time limits for inspections, maintenance checks and inspections (both scheduled and unscheduled)
	-00	GENERAL
	-10	**TIMELIMITS** Manufacturer recommended time limits for inspections, maintenance and overhaul of the air craft, its systems and units, and life of parts For engine manufacturers this will include the flight cycle lives of major rotating components and other items designated critical
	-20	**Scheduled maintenance check** Manufacturer recommended maintenance checks and inspections of the air craft, its systems and units dictated by the time limits specifiedin-10 above. This section shall list in more detail the items which are out line don the air line job forms (usually by title only) and shall cross-reference the detailed procedures in cluded in the individual Maintenance Practices
	-30&-40	Reserved for use in those cases where the number of break out provided by the fourth digit of the-20 break

NOT TO BE REPUBLISHED

System chapter	Sub system section	Title and definition
		out is not sufficient to cover all of the maintenance checks dictated by subsystem-10 above.
	-50	**Unscheduled maintenance checks** Those maintenance checks and in sections on the air craft, its systems and units which are dictated by special or unusual conditions which are not related to the time limits specified in-10 above. Includes inspections and checks such as hard landing, over weight landing, bird strike, turbulent air, lightning strike, slush ingestion, radioactive contamination, maintenance checks prior to engine -out ferry, etc.
6		**Dimensions and areas** Those charts, diagrams, and text which show the area, dimensions, stations, access doors/zoning and physical locations, of the major structural members of the aircraft. Includes an explanation of the system of zoning and measurement used.
7		**Lifting & shoring** This chapter shall include the necessary procedures to lift and shore air craft in any of the conditions to which it may be subjected. Includes lifting and shoring procedures that may be employed during air craft maintenance and repair.
	-00	GENERAL
	-10	JACKING Provides in format ion relative to jack points, adapters, tails up ports, balance weights, jacks and jacking procedures utilized During air craft maintenance and repair.
	-20	SHORING Those instructions necessary to support the air craft during maintenance and repair. Includes information on shoring materials and equipment, contour dimensions, shoring locations, etc.
8		**levelling & weighing** This chapter shall include the necessary information to properly level the air craft for any of the various maintenance, overhaul or major repairs which might become necessary during the life of the air craft. Its hall also include those units or components which are specifically dedicated to record, store or compute weight and balance data. Includes those maintenance practices necessary to prepare the air craft for weighing.
	-00	**General**
	-10	**Weighing and balancing** Those units or components dedicated to the specific function of recording, storing or computing weight and balance data.
	-20	**Levelling** Provides information relative to those units or components dedicated to the specific function of levelling the air craft.
9		**Towing & Taxiing** Those instructions necessary to tow and taxi the aircraft. Charts showing location of attachment points, turning radius, etc., shall be included. Includees those maintenance practices necessary to prepare the aircraft for towing and taxiing.
	-00	**General**
	-10	**Towing** Those instructions necessary to tow or push the air craft in normal or other conditions such as towing with engines removed, etc. Shall include equipment and materials required such as towing vehicles, tow bars, towing cables, etc.; procedures to be used such as ground turning techniques, use of inter phone and brakes, connection of electrical power, etc.; precautions

NOT TO BE REPUBLISHED © NIMI

System chapter	Sub system section	Title and definition
		and limitations such as use of landing gear and control surface locks, minimum turning radius, maximum to wing and pushing load son nose landing gear, etc.
	-20	**Taxiing** Those instructions necessary to taxi the air craft in normal or abnormal conditions such as adverse weather conditions, etc. Shall include procedures to be used such as use of engines, inter phone and brakes, ground turning techniques, etc.; precautions and limitations such as jet intake and exhaust danger areas, minimum turning radius, friction coefficients for various ground conditions, etc.
10		**Parking, mooring, storage & return to service** Those instructions necessary to park, store, moor and prepare the air craft for service in any of the conditions to which it may be subjected. Charts showing location of landing gear and control surface locks, blanking plugs and covers, mooring points, etc., shall be included. Includes those maintenance practices necessary to prepare the aircraft for parking, mooring, or storage.
		GENERAL
		Parking/storage Those instructions necessary to park or store the air craft in normal or abnormal conditions such as with engines removed, or air craft damaged for short or long terms. Shall include equipment and materials required such as landing gear and control surface locks, wheel chocks, blanking plugs and covers, cocooning materials, etc.; procedures such as periodic engine running, control or drainage of fluid systems, static grounding, etc.; precautions and limitations, such as landing gear strut pressures and wheel rotation, control of lifted equipment, etc.

System chapter	Sub system section	Title and definition
	-20	**MOORING** Those instructions necessary to moor or picket the air craft in normal or abnormal conditions or with engines removed, etc.; for short or long terms in extremes of weather conditions. Shall include equipment and materials required such as wheel chocks, mooring blocks, mooring cables, etc.; procedures such as ballasting, etc.; precautions and limitations such as control in high wind conditions, etc.
	-30	**Return to service** Those instructions necessary to prepare the air craft for operation following mooring, parking, or a period of storage.
-11		**Placards and markings** All procurable placards, labels, etc., shall be included in the illustrated Parts Cat alog. They shall be illustrated, showing the part number, Legend and Location.
	-00	**General**
	-10	Exterior color schemes and markings This sub-system/section breakdown reserved for airline use.
	-20	**Exterior placards and markings** Those placards and markings required for ground servicing instructions, inspections, cautions, warnings, etc.
	-30	**Interior placards** Those placards, markings, self-illuminating signs, etc. required for interior general and emergency information, instructions, cautions, warnings, etc.
-12		**Servicing** Those instructions for the replenishment of fluids, scheduled and unscheduled servicing applicable to hew hole air plane. The information shall be concise and prefer ably in tabular or chart form. Precautions to be observed in servicing a particular ankor reservoir,

NOT TO BE REPUBLISHED © NIMI

System chapter	Sub system section	Title and definition
		such as grounding and prevention of fire hazards, shall be clearly stated. Instructions regarding access to any out-of-the-way or unusual places requiring service shall be given. A diagrams howling location of regular and emergency servicing points shall be included. "No-step" are also walkways leading to any tan kina wing or hull, with necessary precautions, shall be indicated.
	-00	**General**
	-10	**Replenishing** Those instructions necessary for the replenishment of fuel, oil, hydraulic fluid, water, other fluids, tire pressure, etc. Tank and reservoir capacities in U.S., imperial and metric measure, shall be included. ANA or other standard specification number and grade (if applicable) of fuel, oil, fluid, and other material used shall be given. Specifications and grades should be shown grouped on one page to facilitate revisions. For fuel, give expansion volume, to tal fuel capacity, sump capacity, net fuel capacity (as applicable) for each tank. For oil, give allowance for expansion.
	-20	**Scheduled servicing** Those instructions necessary to carryout servicing that maybe scheduled. Includes instructions such as those for periodic lubrication of components, radioactivity decontamination, aircraft extern a land internal cleaning, disinfection of aircraft, sanitization of drinking water, etc. Shall not include lubrication procedures required for the accomplishment of maintenance
	-30	**Unschdule servicing** Those instructions necessary to carryout servicing that is normally unscheduled. Includes instructions such as those force and snow removal from parked aircraft, etc.
13		UN ASSIGNED
14		UN ASSIGNED
15		UN ASSIGNED
16		UN ASSIGNED
17		UN ASSIGNED

System chapter	Sub system section	Title and definition
18		**Vibration and noise analysis (Helicopter only)** This chapter shall provide the necessary information to enable operators to monitor and diagnose vibration and noise levels in order to identify imbalance, damage or misalignment in helicopter dynamic and structural components.
	-00	**General**
	-10	**Vibration Analysis** Those instructions necessary to monitor, measure, diagnose and locate sources of vibration in dynamic and structural components. The instructions shall cover related maintenance procedures such as main rotor tracking, tail rotor balancing, main rotor head absorber tuning/checking, general airframe vibration monitoring, etc.
	-20	**Noise Analysis** Those instructions necessary to monitor, measure, diagnose and locate sources of noise in dynamic and structural components.
19		**Un assigned**
20		**Standard Practices-Airframe**
21		**Air Conditioning** Those units and components which furnish a means of pressurizing, heating, cooling, moisture controlling, filtering and treating the air used to ventilate the air as of the fusel age with in the pressure seals. Includes cabin super charger, equipment cooling, heater, heater fuel system, expansion turbine, valves, scoops, ducts, etc.
	-00	**General**
	-10	**Compression** That portion of the system and its controls which supplies compressed air. Includes items such as controls and indicating systems related to the compressors, wiring, etc.

© NIMI NOT TO BE REPUBLISHED

System chapter	Sub system section	Title and definition
	-20	Does not include the pressure control and indicating system for the cabin pressurization. **Distribution** That portion of the system used to induct and distribute air. Includes equipment rack cooling systems and items such as blowers, scoops, ducting, inlets, check valves, wiring, etc. Does not include valves which Are part of pressurization and temperature control.
	-30	**Pressurization control** That portion of the system used to control the pressure with in the fuselage. Includes items such as control valves, relief valves, indicators, switches, amplifiers, wiring, etc.
	-40	**Heating** That portion of the system and its controls which supply heated air. Includes items such as heater panels and other units, fuel system and control, Ignition, indicating systems related to heater operation, wiring, etc. Does not include temperature control and indicating systems.
	-50	**Cooling** That portion of the system and its controls which supply cooled air. Includes items such as the cooling unit, indicating systems related to the cooler operation, wiring, etc. Does not include temperature control and indicating systems.
	-60	**Temperature control** That portion of the system used to control the temperature of the air. Includes items such as control valves, thermal sensing devices, switches, indicators, amplifiers, wiring, etc.
	-70	**Moisture/air contaminant control** That portion of the system used to control moisture in the air, to control ozone concentrations, to filter radio active debris from conditioned air, and to treat the air with deodorizers, insecticides, etc.

System chapter	Sub system section	Title and definition
22		**Auto flight** Those units and components which furnish a means of automatically controlling the flight of the aircraft. Includes those units and components which control direction, heading, attitude, altitude and speed.
	-00	**General**
	-10	**Autopilot** That portion of the system that uses radio/radar signals, directional and vertical references, air data pitot-static, computed flight path data, or manually induced inputs to the system to automatically control the flight path of the air craft through adjustment to the pitch/roll/yaw axis or wing lift characteristics and provide visual cues for flight path guidance, i.e.: Integrated Flight Director. This includes power source devices, interlocking devices and amplifying, computing, integrating, controlling, actuating, indicating and warning devices such as computers, servos, control panels, indicators, warning lights, etc.
	-20	**Speed-Attitude Correction** That portion of the system that automatically maintains safe flight conditions by correcting for effects of speed and out-of-trim conditions by such means as automatic trim, Mach trim or speed stability and Mach feel. This includes sensing, computing, actuating, indicating, internal monitoring, and warning devices, etc.
	-30	**Auto throttle** That portion of the system that automatically controls the position of the throttles to properly man a genuine power during all phases off light/attitude. This includes engaging, sensing, computing, amplifying, controlling, actuating and warning devices such as amplifiers, computers, servos, limits witches, clutches, gearboxes, warning lights, etc.

NOT TO BE REPUBLISHED © NIMI

System chapter	Sub system section	Title and definition
	-40	**System Monitor** That which provides separate or external monitoring/remote readout(for maintenance or other purposes) not directly related to the internal system monitoring (for system integrity flight crew warning). This includes sensing, computing, indicating and warning devices, control panels, etc.
	-50	**Aerodynamic load alleviating** The system or portion of the system that automatically corrects/provides for gust loading/upset, aerodynamic augmentation/alleviation/ suppression, ride control, etc. This includes sensing, computing, actuating, indicating internal monitoring, warning devices, etc.
23		**Communications** Those units and components which furnish a means of communicating from one part of the aircraft to another and between the aircraft and another aircraft or ground stations. Includes voice, data, C-W communicating components, reproducers, all transmitting/receiving equipment, associated antennas, etc.
	-00	**General**
	-10	**Speech Communications** That portion of the system which utilizes voice modulated electromagnetic waves to transmit and/or receive messages from air to air, or air to ground in salvations. Includes H.F., VHF., UHF., etc., in-flight telephone, communication transmitting & receiving equipment.
	-15	**SATCOM** That portion of the system which utilizes satellite communication systems (SATCOM).
	-20	**Data trans mission and automatic Calling** That portion of the system which presents information derived from pulse coded transmissions. Includes Tele printer, Selcal, etc.
	-30	**Passenger address, Entertainment and Comfort**

System chapter	Sub system section	Title and definition
		Available. This sub-system now included in Chapter (System)44.
	-40	**Interphone** Available. Interphone now included in Chapters23-50(Cockpit)and44-10 (Cabin)
	-50	**Audio integrating** That portion of the system which controls the output of the communications and navigation receivers into the flight crew head phones and speakers and the output of the flight crew microphones into the communications transmitters. Also includes the flight to ground personnel communications. Includes items such as audio selector control panel, micro-phones, headphones, cock pit loudspeakers, etc.
	-60	**Static is charging** That portion of the system which is used to dissipate static electricity.
	-70	**Audio & Video monitoring** Those installations that record, or monitor crew conversation or movement, or provide external monitoring, for security or safety purposes. Includes externally mounted cameras, voice and/or video recorders, etc., used for aircraft operations.
	-80	**Integrated automatic tuning** That portion of the system which maintains integrated control of the operating frequencies of communication and navigation transmitter/receivers after either a manually inserted command or a pre-programmed integrated flight system command. Includes such items as integrated frequency selector panels, digital frequency control computers, integrated frequency display panels, etc.
24		**Electrical power** Those electrical units and components which generate, control and supply AC and/or DC electrical power for other systems, including generators and relays, inverters, batteries, etc., through the

NIMI © NOT TO BE REPUBLISHED

System chapter	Sub system section	Title and definition
		secondary buses. Also includes common electrical items such as wiring, switches, connectors, etc.
	-00	**General**
	-10	**Generator drive** Mechanical devices that drive the generators at a desired RPM. Includes items such as oil system, connecting devices, indicating and warning systems for the drive, etc.
	-20	**AC generation** That portion of the systems used to generate, regulate, control, and indicate AC electrical power. Includes items such as inverters, AC generators/alternators, control and regulating components, indicating systems, etc., all wiring to but not including main buses.
	-30	**DC generation** That portion of the systems used to generate, regulate, control and indicate DC electrical power. Includes items such as generators/ alternators, transformers, rectifiers, batteries, control and regulating components, indicating systems, etc., all wiring to but not including main buses.
	-40	**External power** That portion of the system within the aircraft which connects external electrical power to the aircraft's electrical system. Includes items such as receptacles, relays, switches, wiring, warning lights, etc.
	-50	**AC electrical load distribution** That portion of the system which provides for connection of AC power to using systems. Includes items such as AC main and secondary buses, main system circuit breakers, power system devices, etc.
	-60	**DC electrical load distribution** That portion of the system which provides for connection of DC power to using systems. Includes items such as DC main and secondary buses, main system circuit breakers, power system devices, etc.

System chapter	Sub system section	Title and definition
	-70	**Primary and secondary power** That portion of the system which provides for connection of AC and DC power to using systems. Includes items such as main and secondary busses, main system circuit breakers, power system devices, specific interface for computer-aided maintenance action etc.
25		**Equipment/furnishings** Those removable items of equipment and furnishings contained in the flight and passenger compartments. Includes emergency, galley and lavatory equipment. Does not include structures or equipment assigned specifically to other chapters.
	-00	**General**
	-10	**Flight compartment** The compartment above the floor and between the forward passenger partition and the forward pressure dome. Includes items such as flight crew seats, tables, pilot check lists and food containers, wardrobes, curtains, manuals, electronic equipment rack, spare bulbs, fuses, etc. Does not include cargo compartments.
	-20	**Passenger compartment** The areas in which the passengers are seated. Includes lounges but not dressing rooms. Includes items such as seats, berths, over head storage compartments, curtains, wall coverings, carpets, magazine racks, ward robes, movable partitions, wall-type thermometers, spare bulbs, fuses, etc.
	-30	**Galleys** The areas in which food and beverage sare. Stored and prepared. Includes items such as Removable and fixed cabinets, ovens, refrigerators, garbage containers, dish racks, coffee maker and dispensers, containers, electrical outlets, wiring, etc.

© TAMI NOT TO BE REPUBLISHED

System chapter	Sub system section	Title and definition
	-40	**Lavatories** The toilet and dressing room areas containing washbasins, dressing tables, and water closet. Includes items such as mirrors, seats, cabinets, dispensing equipment, electrical outlets, wiring, etc. Washbasins and water closets are included in Chapter (System) 38.
	-50	**Additional compartments** Those additional compartments for the use of passengers and/or crew. Includes such compartments as crew rest compartments, sleeping compartments etc.
	-60	**Emergency** Those items of equipment carried for use in emergency procedures. Includes items such as evacuation equipment, life rafts, jackets, emergency locator transmitters, underwater locator devices, first aid kit, incubators, oxygen tents, medical stretchers, landing and signal flares, drag parachutes, evacuation signalling systems, etc. Does not include fire extinguishers, oxygen equipment or masks.
	-70	**Available**
	-80	**Insulation** Those insulation blankets which are used for heat and sound insulation. Includes flight compartments, passenger compartment and additional compartment insulation, etc.
-26		**Fire protection** Those fixed and portable units and components which detect and indicate fire or smoke and store and distribute fire extinguishing agent to all protected areas of the aircraft; including bottles, valves, tubing, etc.
	-00	**General**
	-10	**Detection** That portion of the system which is used to sense and indicate the presence of overheat, smoke, or fire.

System chapter	Sub system section	Title and definition
	-20	**Extinguishing** That portion of those fixed or portable systems which is used to extinguish fire.
	-30	**Explosion suppression** That portion of the system which is used to sense, indicate and extinguish a flame propagating into the fuel vent or scoop to prevent an explosion in the fuel system.
-27		**Flight controls** Those units and components which furnish a means of manually controlling the flight attitude characteristics of the aircraft, including items such as hydraulic boost system, rudder pedals, controls, mounting brackets, etc. Also includes the functioning and maintenance aspects of the flaps, spoilers and other control surfaces, but does not include the structure which is covered In the Structures Chapters. Does not include rotor craft rotor controls which are covered in Chapter(System)65.
	-00	**General**
	-10	**Aileron & tab** That portion of the systems which controls the position and movement of the ailerons/elevons and tabs. Includes items such as the control wheels, cables, boosters, linkages, control surfaces, indicators, etc.
	-20	**Rudder & tab** That portion of the systems which controls the position and movement of the rudder and rudder tabs. Includes items such as the rudder pedals, tab control wheel, cables, boosters, linkages, control surfaces, position indicators, etc.
	-30	**Elevator & tab** That portion of the systems which controls the position and movement of the elevator/elevon and tabs. Includes items such as the control column, stick shaker units, automatic stall recovery devices, tab

© NIMI NOT TO BE REPUBLISHED

System chapter	Sub system section	Title and definition
		control wheels, cables, boosters, linkages, control surfaces, position indicators, stall warning systems, etc.
	-40	**Horizontal stabilizer** That portion of the system which controls the position and movement of the horizontal stabilizer/canard. Includes items such as control handle, cables, jackscrews, motors, warning systems, linkages, control surfaces, position indicators, etc.
	-50	**Flaps** That portion of the systems which controls the position and movement of the trailing edge flaps. Includes items such as control handles, cables, actuators, warning systems, linkages, control surfaces, position indicators, etc.
	-60	**Spoiler, drag devices and variable aerodynamic fairings** That portion of the systems which controls the position and movement of the spoilers, drag devices and variable aerodynamic fairings. Includes fairings. Includes items such as control handles, cables, warning systems, linkages, spoilers, drag devices, position indicators, etc.
	-70	**Gust lock & dampener** That portion of the systems which protects the control surfaces from movement by wind while the aircraft is on the ground. Does not include locking the control by means of flight control boost system.
	-80	**Lift augmenting** That portion of the systems which controls the position and movement of variable opening wings slots, leading edge wing flaps, and other similar auxiliary devices used for increasing aero dynamic lift. Includes items such as control handles, cables, actuators, linkages, warning systems, control surfaces, position indicators, etc. Does not include trailing edge flaps.

System chapter	Sub system section	Title and definition
-27		**Fuel** Those units and components which store and deliver fuel to the engine. Includes engine driven fuel pumps for reciprocating engines, includes tanks (bladder), valves, boost pumps, etc., and those components which furnish a means of dumping fuel overboard. Includes integral and tip fuel tank leak detection and sealing. Does not include the structure of integral or tip fuel tanks and the fuel cell backing boards which are covered in the Structures Chapters, and does not include fuel flow rate sensing, transmitting and/or indicating, which are covered in Chapter(System) 73.
	-00	**General**
	-10	**Storage** That portion of the system which stores fuel. Includes tank sealing, bladder type cells, ventilating system, cell and tank inter-connectors, over wing filler necks and caps, etc. Also includes reservoir feed pumping systems and reservoirs within the tanks which are not part of the distribution system.
	-20	**Distribution** That portion of the system which is used to distribute fuel from the filler connect or to the storage system and from the storage system to and including the power plant fuel quick disconnect. Includes items such as plumbing, pumps, valves, controls, etc.
	-30	**Dump** That portion of the system which is used to dump fuel over board during flight. Includes items such as plumbing, valves, controls, chutes, etc.
	-40	**Indicating** That portion of the system which is used to indicate the quantity, temperature, and pressure of the fuel. Includes pressure warning systems for pumping systems within the tank, etc.

NCVT MMI © NOT TO BE REPUBLISHED

System chapter	Sub system section	Title and definition
		Does not include engine fuel flow or pressure.
-29		**Hydraulic power** Those units and components which furnish hydraulic fluid under pressure (includes pumps, regulators, lines, valves, etc.) to a common point (manifold) for redistribution tooth redefined systems.
	-00	**General**
	-10	**Main** That portion of the system which is used to store and deliver hydraulic fluid to using systems. Includes items such as tanks, accumulators, valves, pumps, levers, switches, cables, plumbing, wiring, external connectors, etc. Does not include the supply valves to the using systems.
	-20	**Auxiliary** That portion of the system which is classified as auxiliary, emergency or stand by, and which is used to supplement or take the place of the main hydraulic system. Includes items such as tanks and accumulators which are separate from the main system, hand pumps, auxiliary pumps, valves, plumbing, wiring, etc.
	-30	**Indicating** That portion of the system which is used to indicate the quantity, temperature and pressure of the hydraulic fluid. Includes items such as transmitters, indicators, wiring, warning systems, etc.
-30		**Ice and rain protection** Those units and components which provide a means of preventing or disposing of formation of ice and rain on various parts of the aircraft. Includes alcohol pump, valves, tanks, propeller/rotor anti-icing system, wing heaters, water line heaters, pitot heaters, scoop heaters, windshield wipers and the electrical and heated air portion of wind shiel dice control. Does not include the basic windshield panel.

System chapter	Sub system section	Title and definition
		For turbine type power plants using air as the anti-icing medium, engine anti-icing is contained under Air System.
	-00	**General**
	-10	**Airfoil** That portion of the system which is used to eliminate or prevent the formation of ice on all airfoil surfaces. Includes wings, airfoil sections of the empennage, and pylons.
	-20	**Air intakes** That portion of the system which is used to eliminate or prevent the formation of ice in or around air intakes. Includes power plant cowling anti-icing.
	-30	**Pitot and static** That portion of the system which is used to eliminate or prevent the formation of ice on the pitot and static systems.
	-40	**Windows, windshields and doors** That portion of the system which is used to eliminate or prevent the formation office, frost or rain on the windows, wind shields and doors.
	-50	**Antennas and radomes** That portion of the system which is used to eliminate or prevent the formation of ice on an ten nasandra domes.
	-60	**Propellers/rotors** That portion of the system which is used to eliminate or prevent the formation office on propellers or rotors. Includes all components up to but not including rotating assembly.
	-70	**Waterlines** That portion of the system which is used to prevent the formation office in water supply and drain lines.
	-80	**Detection** That portion of the system which is used to detect and indicate the formation office.

NOT TO BE REPUBLISHED © NIMI

System chapter	Sub system section	Title and definition
-31		**Indicating/recording systems** Pictorial coverage of all instruments, instrument panels and controls. Procedural coverage of those systems which give visual or aural warning of conditions in unrelated systems. Units which record, store or compute data from unrelated systems. Includes systems/units which integrate indicating instruments into a central display system and instruments not related to any specific system.
	-00	**General**
	-10	**Instrument & control panels** Coverage of all panels fixed or movable with the irreplaceable components such as instruments, switches, circuit breakers, fuses, etc. Also includes general coverage of instrument panel vibrators and other panel accessories.
	-20	**Independent instruments** Those instruments, units and components which are not related to specific systems. Includes items such as inclinometers, clocks, etc.
	-30	**Recorders** Those systems and components used for recording data not related to specific systems. Includes items such as flight recorders, performance or maintenance recorders, vg recorders, etc.
	-40	**Central computers** Those systems and components used for computing data from a number of different sources without a preponderance of function sin anyone system. Includes items such as Digital Core Avionic System (DCAS), stored checklist, emergency procedures, company regulations, etc., for call-up on a display, integrated instrument systems such as engine, airplane power and central warning indicators when combined into a central display.

System chapter	Sub system section	Title and definition
	-50	**Central warning systems** Those systems and components which give audible or visual warning of conditions in unrelated systems. Includes items such as master warning or flight warning systems, central instrument warning, or caution and warning systems, tone generators, enunciators, etc.
	-60	**Central display systems** Those systems and components which give visual display of conditions in unrelated systems.
	-70	**Automatic data reporting systems** Those systems and components used for collating and computing data from unrelated systems and transmitting same automatically. Includes asdar systems and components.
-32		**Landing gear** Those units and components which furnish a means of supporting and steering the aircraft on the ground or water, and make it possible to retract and store the landing gear in flight. Includes tail skid assembly, brakes, wheels, floats, skids, skis, doors, shock struts, tires, linkages, position indicating and warning systems. Also includes the functioning and maintenance aspects of the landing gear doors but does not include the structure which is covered in chapter(system)52.
	-00	**General**
	-10	**Main gear and doors** That portion of the system which provides the major support for the aircraft while on the ground. Includes items such as shock struts, bogie axles, drag struts, doors, linkages, attach bolts, etc.
	-20	**Nose gear and doors** That portion of the system which supports the nose of the aircraft while the aircraft is on the ground. Includes items such as shock struts, drag struts, doors, linkages, attach bolts, etc.

NOT TO BE REPUBLISHED © NIMI

System chapter	Sub system section	Title and definition
	-30	**Extension and retraction** That portion of the system which is used to extend and retract the landing gear and open and close the landing gear doors. Includes items such as actuating mechanisms, bogie trim, bungees, up and down latches, operating controls, valves and motors, cables, wiring, plumbing, etc.
	-40	**Wheels and brakes** That portion of the system which provides for rolling and stopping the aircraft while on the ground and stopping wheel rotation after retraction. Includes items such as bearings, tires, valves, de-boosters, swivel glands, anti-skid devices, pressure indicators, plumbing, etc.
	-50	**Steering** That portion of the system which is used to control the direction of movement of the aircraft on the ground. Includes items such as actuating cylinders, controls, bogie swivel unlock, etc.
	-60	**Position and warning** That portion of the system which is used to indicate and warn of the position of the landing gear/doors. Includes items such as switches, relays, lights, indicators, horns, wiring, etc.
	-70	**Supplementary gear** Devices used to stabilize the aircraft while on the ground and prevent damage by ground contact. Includes items such as shock strut, skid block, wheels, etc.
33		**Lights** Those units and components (electrically powered) which provide for external and internal illumination such as landing lights, taxi lights, position lights, rotating lights, ice lights, master warning lights, passenger reading and cabin dome lights, etc.

System chapter	Sub system section	Title and definition
		Includes light fixtures, switches and wiring. Does not include warning lights for individual systems or self-illuminating signs, see chapter(system)11.
	-00	**General**
	-10	**Flight compartment** The lighting sub-systems in the compartment above the floor and between the forward passenger partition and the forward pressure dome. Does not include cargo compartment. Includes direct and indirect illumination of work areas, panels, and instruments. Includes master warning light and warning light dimming systems, where not integrated with a central audio or visual system under31-50.
	-20	**Passenger compartment** The lighting sub-systems in the areas in which the passengers are seated and in buffet/galley, lavatories, lounges and coat rooms. Includes items such as direct and indirect illumination, passenger call system, lighted signs, etc.
	-30	**Cargo and service compartments** The lighting sub-systems in the compartments for stowage of car go and the housing of various components of accessories.
	-40	**Exterior** The lighting sub-systems used to provide illumination out side of the aircraft. Includes lights such as landing, navigation, position indicating, wing illumination, rotating, courtesy, taxi, etc.
	-50	**Emergency lighting** The separate and independent sub-system used to provide illumination in case of primary electrical power failure. Includes items such as inertia flash lights, lanterns, etc.
34		**Navigation** Those units and components which

© NIMI NOT TO BE REPUBLISHED

System chapter	Sub system section	Title and definition
		provide aircraft navigational information. Includes vor, pitot, static, ils, flight director, compasses, indicators, etc.
	-00	**General**
	-10	**Flight environment data** That portion of the system which senses environmental conditions and uses the data to influence navigation. Includes such items as central air data computers, pitot/static systems, air temperature, rate-of-climb, airspeed, high speed warning, altitude, altitude reporting, altimeter correction system, air disturbance detection system, etc.
	-20	**Attitude & direction** The portion of the system which uses magnetic or inertia forces to sense and display the direction or attitude of the aircraft. This includes sensing, computing, indicating and warning devices such as magnetic compasses, vertical and directional references, magnetic heading systems, attitude director systems, symbol generators, turn and bank, rate of turn, amplifiers, indicators, etc. Includes Flight Director when it is not integral with the auto pilot computation.
	-30	**Landing and taxiingaids** That portion of the system which provides guidance during approach, landing and taxiing. Includes items such as localizer, glide slope, ils, markers, para-visual director ground guidance systems, etc.
	-40	**Independent position determining** That portion of the system which provides information to determine position and is mainly independent of ground installations or orbital satellites. Includes items such as inertial guidance systems, weather radar, doppler, proximity warning, collision avoidance, start racker, etc. Also includes sextants/octants, etc.
	-50	**Dependent position determining** That portion of the system which provides information to determine position and is mainly dependent on ground installations or orbital satellites. Includes items such as dme, transponders, radio compass, etc.
	-60	**Flight management computing** That portion of the system which combines navigational data to compute or manage the aircraft's geographical position or theoretical flight path. Includes items such as course computers, flight management computers, performance data computers, and associated control display units, warning annunciators, etc.
35		**Oxygen** Those units and components which store, regulate, and deliver oxygen to the passengers and crew, including bottles, relief valves, shut-off valves, outlets, regulators, masks, walk-around bottles, etc.
	-00	**General**
	-10	**Crew** That portion of the system which furnishes oxygen to the crew.
	-20	**Passenger** That portion of the system which furnishes oxygen to the passengers.
	-30	**Portable** That portion of the system which has an independent oxygen supply, and which can be transported about the air plane.
36		**Pneumatic** Those units and components (ducts and valves) which deliver large volumes of compressed air from a power source to connecting points for such other systems as air conditioning, pressurization, de-icing, etc.
	-00	**General**
	-10	**Distribution** That portion of the system which is used to distribute high or low pressure air to using systems. Includes items such as ducts, valves, actuators,

© NIMI NOT TO BE REPUBLISHED

System chapter	Sub system section	Title and definition
		heat exchangers, controls, etc. Does not include the supply valves to the using systems.
	-20	**Indicating** That portion of the system which is used to indicate temperature and pressure of the pneumatic system. Includes temperature and pressure warning systems.
37		**Vacuum** Those units and components used to generate, deliver and regulate negative air pressure, including pumps, regulators, lines, etc., through and including the manifold.
	-00	**General**
	-10	**Distribution** That portion of the system which is used to distribute negative pressure air to using systems.
	-20	**Indicating** That portion of the system which is used to indicate pressure. Includes pressure warning system.
38		**Water/waste** Those fixed units and components which store and deliver for use, fresh water, and those fixed components which store and furnish a means of removal of water and waste. Includes wash basins, toilet assemblies, tanks, valves, etc.
	-00	**General**
	-10	**Potable** That portion of the system which is used to store and deliver fresh drinking water. Includes wash water system if the potable water is also used for washing.
	-20	**Wash** That portion of the system which is used to store and deliver wash water which is not potable.
	-30	**Waste disposal** That portion of the system which is used for disposal of water and waste.

System chapter	Sub system section	Title and definition
		Includes items such as wash basins, water closets, flushing systems, etc.
	-40	**Air supply** That portion of the system common to more than one sub-system which is used for pressurizing supply tanks to insure fluid flow.
39		**Unassigned**
40		**Unassigned**
41		**Water ballast** Those units and components provided for the storage, balancing, control, filling, discharge, and dumping of water ballast. Does not include units or components covered in chapter(system)38.
	-00	**General**
	-10	**Storage** That portion of the system which stores water solely for the purpose of providing air ship ballast. Includes removable tanks (bladder cells), interconnecting balance pipes, filler valves, etc.
	-20	**DUMP** That portion of the system used to dump water ballast during flight. Includes valves, remote/direct, manual/automatic controls, etc.
	-30	**Indication** That portion of the system used to indicate quantity, condition and relative distribution of the water ballast.
42		**Integrated modular avionics (proposed)** Generalize computing devices that can host software applications for system functions that had traditionally been implemented in dedicated hardware. The actual system functions are covered in the irrespective ata chapters.
	-00	**General**
	-20	**Core system**
	-30	**Network components**
43		**Unassigned**

© NIMI NOT TO BE REPUBLISHED

System chapter	Sub system section	Title and definition
44		**Cabin systems** Those units and components which furnish a means of entertaining the passengers and providing communication within the aircraft and between the aircraft cabin and ground stations. Includes voice, data, music and video transmissions. Does not include SATCOM, HF, VHF, UHF and all transmitting/receiving equipment, antennas, etc., which are covered in Chapter (System)23or Chapter(System)46.
	-00	**General**
	-10	**Cabin core system** That portion of the system used to accomplish the integrated functional control, operation, testing and monitoring of cabin systems and to increase cabin comfort (such as active noise control). Includes items such as controllers, cabin control panels, handsets, signs, loudspeakers, etc.
	-20	**In flight entertainment system** That portion of the system used to entertain the passengers with music, video, information, games, etc. Includes items such as controllers, cabin control panels, audio and video equipment, etc.
	-30	**External communication system** That portion of the system used by System passengers and cabin crew to transmit and/or receive data/ messages from air to air or from air to ground installations. Includes items such as telephones, tele faxes, modems, AM/FM radio units, etc.
	-40	**Cabin mass memory system** That portion of the system used to store and process cabin related data, such as systems configuration data, multimer dia programs, etc. Includes items such as controllers, terminals, keyboards, disk drives, printers, modems, etc.
	-50	**Cabin monitoring system** That portion of the system used to monitor parts of the cabin area. Includes items such as surveillance cameras, monitors, etc. Does not include external anti-hijack devices or external video monitoring which are covered in chapter(system)23.
	-60	**Miscellaneous cabin system** That portion of the system used to support miscellaneous cabin functions.
45		**Central maintenance system (CMS)** Those units, components and associated system which interfaces with multiple aircraft systems. Contains check out and fault isolation procedures using a central computer complex and/or standard fault isolation procedure to locate a single system or componential function.
	-00	**General**
	-5 thru-19	**CMS/aircraft general** Central maintenance system interfaces with general aircraft systems and identification of maintenance functions related to aircraft general.
	-20 thru -49	**CMS/airframe systems** Central Maintenance System interfaces with Airframe Systems, and identification of maintenance functions related to Airframe Systems.
	-45	**Central maintenance system** That portion of the system which interfaces with other airplane systems, flight line mechanics, and radio communications. Includes computers, storage devices, control and display devices.
	-50 thru -59	**CMS/structures** Central Maintenance System interfaces with Structures, and identification of maintenance functions related to Structures.
	-60 thru -69	**CMS/propellers** Central Maintenance System interfaces with Propeller, and identification of maintenance functions related to Propellers.

NOT TO BE REPUBLISHED © NIMI

System chapter	Sub system section	Title and definition
	-70 thru -89	**CMS/power plant** Central Maintenance System interfaces with Power Plant, and identification of maintenance functions related to Power Plant.
46		**Information systems** Those units and components which furnish a means of storing, updating, and retrieving digital information traditionally provided on paper, microfilm, or microfiche. Includes units that are dedicated to the information storage and retrieval function such as the Electronic Library mass storage and controller. Does not include units or components installed for other uses and shared with other systems, such as flight deck printer or general use display.
	-00	**General**
	-10	**Airplane general information systems**
	-20	**Flight deck information systems** That portion of the on board information system that' supports the flight deck systems, flight deck crew and flight operations
	-30	**Maintenance information systems** That portion of the on board flight information system that supports all on board maintenance system functions, maintenance technicians, and any ground based maintenance activity.
	-40	**Passenger cabin information systems** That portion of the on board information system that supports the passenger cabin, cabin operations, and flight attendants.
	-50	**Miscellaneous information systems** That portion of the on board information system that supports other functions, as defined by the user, that cannot be related to the flight deck, passenger cabin, or maintenance.

System chapter	Sub system section	Title and definition
49		**Inert gas system** Those units and components used to generate, store, deliver and regulate inert gas. Includes regulators, lines, manifolds, etc.
	-00	**General**
		Generation/storage
	-10	That portion of the system which generates and/or stores inert gas. Includes tanks, cells, reservoirs, accumulators, etc. Does not include plumbing, pumps, valves, controls, etc.
	-20	**Distribution** That portion of the system which is used to distribute inert gas to the using systems. Includes plumbing, pumps, valves, regulators, etc.
	-30	**Control** The inert gas controls which meter the inert gas to the distribution components and into the using systems. Includes items such as levers, switches, cables, etc.
	-40	**Indicating** That portion of the system which is used to indicate the flow rate, temperature and pressure of the inert gas. Includes items such as transmitters, indicators, etc.
-49		**Airborne auxiliary power** Those air borne power plants(engines) which are installed on the air craft for the purpose of generating and supplying a single type or combination of auxiliary electric, hydraulic, pneumatic or other power. Includes power and drive section, fuel, ignition and control systems; also wiring, indicators, plumbing, valves, and ducts up to the power unit. Does not include generators, alternators, hydraulic pumps, etc., or their connecting systems which supply and deliver power to their respective aircraft systems.

© NIMI NOT TO BE REPUBLISHED

System chapter	Sub system section	Title and definition
	-00	**General**
	-10	**Power plant** For definitions see Chapter (System) 71.
	-20	**Engine** For definitions see Chapter (System) 72.
	-30	**Engine fuel and control** For definitions see Chapter (System) 73.
	-40	**Ignition/starting** For definitions see Chapter (System) 74 and Chapter(System)80.
	-50	**AIR** For definitions see Chapter(System)75.
	-60	**Engine controls** For definitions see Chapter(System)76.
	-70	**Indicating** For definitions see Chapter(System)77.
	-80	**Exhaust** For definitions see Chapter(System)78.
	-90	**OIL** For definitions see Chapter(System)79.
50		**Cargo and accessory compartments** Those compartments for storage of cargo and various components and accessories. Includes those systems used to load/unload cargo and other cargo related systems. Does not include aircraft structure which is in Chapter(System)53.
	-00	**General**
	-10	**Cargo compartments** Those compartments for storage of cargo.
	-20	**Cargo loading systems** Those systems which have components which are or can be mounted on the aircraft and used to load/unload, restrain, guide or service cargo. Includes drive systems, rollers, latches, restraint nets etc.
	-30	**Cargo related systems** Those systems which are related to loading/unloading of cargo. Includes aircraft levelling, loader alignment systems etc. Does not include Cargo Loading Systems
	-40	**Unassigned**
	-50	**Accessory compartments** Those compartments used for the housing of various components and accessories. Includes wheel wells, tail-hydraulic-electrical/electronic equipment racks, main battery structure etc.
	-60	**Insulation** Those insulation blankets which are used for heat and sound insulation. Includes cargo compartments and accessory compartments, insulation, etc.
51		**Standard practices and structures-general** Standard practices, general procedures and typical repairs applicable to more than one chapter and are not specifically covered under chapter(system)52thru chapter (system)57sub-sys/sect breakdown.
	-00	**General** Airplane major structural breakdown diagram. Primary and secondary structure diagram. Principal area and dimensional data. Restricted area diagram. Zoning diagram. Access do or and panel identification. Glossary.
	-10	**Investigation, clean up and aero dynamic** **Smoothness** Definition of damage classifications. Clean up of dents, cracks, scratches, corrosion, etc. Aerodynamic smoothness requirements for the airplane, and permissible contour variations, gaps, and mismatch data.
	-20	**Processes** Special processes for use in the

NOT TO BE REPUBLISHED © NIMI

System chapter	Sub system section	Title and definition
		repair of the airplane. Will not include general engineering practices unless specific deviations are required. Unique processes such as welding specifications, etc., relative to a single repair shall be in corporate in the repair and only referenced here.
	-30	**Materials** Description of materials (metallic and non-metallic) including extrusions, formed sections, sheet, sealants, adhesives, and special materials used in airplane repair. Where possible, permissible substitutes and sources of supply will be given.
	-40	**Fasteners** Description off as tener types, materials, and sizes. Procedures for fastener installation and removal including hole preparation. Fasteners strength values and substitution data.
	-50	**Support of airplane for repair and Alignment check procedures** Procedure for supporting the airplane to relieve loads during repairs. Includes locations for supports and contour dimensions for required ground equipment.
	-60	**Control-surface balancing** Procedures for adjusting the mass balance of control surfaces after repair. Where applicable, individual repairs will contain their own balancing instructions.
	-70	**Repairs** Typical repairs suitable for general use, not limited to one ata chapter.
	-80	**Electrical bonding** Topics concerning the electrical bonding of aircraft structure as well as electrical bonding of sub systems to air craft structure.
-52		**Doors** Removable units used for entrance or exit, and for enclosing other structure contained with in the fuselage. Includes passenger and crew doors, cargo doors, emergency exits, etc. Electrical and hydraulic systems associated with door control are

System chapter	Sub system section	Title and definition
		included as appropriate.
	-00	**General**
	-10	**Passenger/crew** Doors used for entrance and exit of the passengers and crew to and from the aircraft. Includes items such as structure, latching mechanis ms, lockingunits, handles, insulation, lining, controls, integral steps, ramps, handrails, attach/attached fittings, etc.
	-20	**Emergency exit** Exit doors used to facilitate evacuation that are not normally used for exit. Includes items such as structure, latching mechanisms, locking units, handles, insulation, lining, controls, attach/attached fittings, etc.
	-30	**Cargo** Exterior doors used primarily to gain access to cargo compartments. Includes items such as structure, latching mechanisms, motors, handles, insulation, lining, controls, integral steps, ramps, handrails, attach/attached fittings, etc.
	-40	**Service and miscellaneous** Exterior doors used primarily to gain access for servicing aircraft systems and equipment and miscellaneous exterior doors used to fulfill system functions. Includes items such as structure, latching mechanisms, handles, insulation, lining, controls, integral steps, handrails, attach/ attached fittings, etc.
	-50	**Fixed interior** Doors inside the fusel age installed in fixed partitions. Includes items such as structure, latching mechanisms, handles, lining, attach/ attached fittings, etc. Does not include doors installed in movable partitions which are covered in chapter (system)25.
	-60	**Entrance stairs** Stairs which operate in conjunction with but are not an integral part of entrance doors. Stairs whose primary

© NIMI NOT TO BE REPUBLISHED

System chapter	Sub system section	Title and definition
		structure is a door shall be covered under the appropriate topic. Includes items such as structure, actuating mechanisms and controls, handrails, attach/attached fittings, etc.
	-70	**Monitoring and operation** That portion of the system which is used for the powered operation of the doors and/or to indicate whether the doors are closed and properly latched. Includes items such as motors, computers, sensors, switches, lights, bells, horns, etc. Does not include landing gear door warning which is covered in chapter (system)32.
	-80	**Landing gear** Structure of the doors used to enclose the landing gear compartments. Includes items such as structure, latching mechanisms, handles, insulation, lining, controls, attach/ attached fittings, etc.
53		**Fuselage** Structural units and associated components and members which make up the compartments for equipment, passengers, crew, cargo, plus the structure of the envelope and gondola of airships. Includes skins, belt frames, stringers, floor beams, floor, pressure dome, scuppers, tail cone, fuselage-to-wing-and-empennage fillets, attach/attached fittings, load curtains, cables, ballonets, etc.
	-00	**General**
	-10 thru-90)as reqd)	**Fuselage sections** Skins, main structure, secondary structure, and fairing soft he complete fusel age with any structural differences grouped together and highlighted by fusel age section location. The section locations shall be defined by manufacturing joints or other suitable demarcations in sequence from front to rear. Does not include movable partitions covered in chapter(system)25 nor the functional and maintenance aspects of variable aerodynamic fairings covered in chapter(system)27.

System chapter	Sub system section	Title and definition
54		**Nacelles/pylons** Structural units and associated components and members which furnish a means of mounting and housing the power plant or rotor assembly. Includes skins, longerons, belt frames, stringers, clamshells, scuppers, doors, nacelle fillets, attach/attached fittings, etc. Also includes the structure of power plant cowling inclusive of the structural portion of the inlet whether or not integral with the aircraft. Structural portions of the exhaust system are excluded where they are not integral with the airframe.
	-00	**General**
	-10 thru-40)as reqd)	**Nacelle section** Skins, primary structure, secondary structure, fillets, and fairing sofa complete nacelle with any structural differences grouped together and highlighted by specific nacelle designator.The section locations shall be defined by manufacturing joints or other suitable demarcations in a logical sequence.
	-50 thru-80)as reqd)	**Pylon** Skins, primary structure, secondary structure, fillets, and fairing sofa complete pylon with any structure differences grouped together and highlighted by specific pylon designator. The section locations shall be defined by manufacturing joints or other suitable demarcations in a logical sequence.
55		**Stabilizers** Horizontal and vertical stabilizers include the structure of the elevator and rudder.
	-00	**General**
	-10	**Horizontal stabilizer or canard** The horizontal lair foil of the tail or nose section to which the elevator is attached. Includes items such as spars, ribs, stringers, skins, access covers, tips, attach/attached fittings, etc.

© NIMI NOT TO BE REPUBLISHED

System chapter	Sub system section	Title and definition
	-20	**Elevator** Removable airfoil which is attached to the horizontal stabilizer or canard and used for pitch control. Includes items such as spars, ribs, stringers, skins, access covers, tabs, balance devices, attach/attached fittings, etc.
	-30	**Vertical stabilizer** Vertical airfoil to which the rudder is attached. Includes items such as spars, ribs, stringers, skins, access covers, tips, attach/attached fittings, etc.
	-40	**Rudder** Removable air foil which is attached to the vertical stabilizer and used for yaw control. Includes items such as spars, ribs, stringers, skins, access covers, tabs, balance devices, attach/ attached fittings, etc.
56		**Windows** Fusel age and crew compartment windows inclusive of wind shield ;also, those windows installed in doors
	-00	**General**
	-10	**Flight compartment** Compartment above the floor and between the forward passenger partition and the forward pressure dome. Includes items such as the transparent material and its frame of sliding and fixed windows and wind shields, handles, latching mechanisms, etc. Does not include door or inspection/observation windows.
	-20	**Passenger compartment** Area in which the passengers are seated. Includes lounges, lavatories, buffets/galleys and coatrooms. Includes items such as transparent material, its frame, frost shield, etc.
	-30	**Door** Doors used for entrance and exit of the passengers, flight crew and service personnel to and from the airplane. Includes items such as transparent material, its frame, etc. Does not include emergency exit windows.

System chapter	Sub system section	Title and definition
	-40	**Inspection and observation** Windows used for examining compartments and equipment in and about the airplane, and astrodomes used for celestial navigation. Includes items such as transparent material, its frame, etc.
57		**Wings** Center wing and outer wing structural units and associated components and members which support the aircraft in flight. Includes spars, skin, ribs, stringers, clamshells, scuppers, etc., and integral fuel tank structure of the flaps, slats, ailerons or elevons (complete with tabs), spoilers, and wing folding system.
	-00	**General**
	-10	**Center wing** Skins, primary structure, fillets, and fairings of the center wing ,and attach/ attached fittings.
	-20	**Outer wing** Skins, primary structure, fillets, and fairings of the outer wing, and attach/ attached fittings.
	-30	**Wingtip** Skins and structure of the wing tip and attached fittings.
	-40	**Leading edge and leading edge devices** Skins and structure of the wing leading edge and removable leading edge air foils such as flaps, slats, attach/attached fittings, etc.
	-50	**Trailing edge trailing edge devices** Skins and structure of the wing and trailing edge and removable edge airfoils such as flaps and attach/ attached fittings.
	-60	**Ailerons and elevons** Skins and structure of aileron sand tabs including balancing devices and attach/attached fittings.

© NIMI NOT TO BE REPUBLISHED

System chapter	Sub system section	Title and definition
	-70	**Spoilers** Skins and structure of wing-mounted spoilers, airbrakes, lift dumpers, attach/attached fittings, etc.
	-80	**(As required)**
	-90	**Wing folding system** System that controls the on-ground movement of any portion of the main wing structure. Includes mechanisms, linkages, actuators, locks, indicating/warning systems, etc.
58		**Unassigned**
59		**Reserved for air line use**
60		**Standard practices - propeller/ rotor**
61		**Propellers/propulsion** The complete mechanical or electrical propeller, pumps, motors, governor, alternators, and those units and components external to or integral with the engine used to control the propeller blade angle. Includes propeller spinner synchronizers. Also includes propulsion duct assemblies, including aerodynamic fairing of mechanical components, stators, vectoring systems, etc.
	-00	**General**
	-10	**Propeller assembly** That portion of the system which rotates except the engine propeller shaft. Includes items such as blades, dome, hub, spinner, slip ring, de-icer boot, distributor valve, etc.
	-20	**Controlling** That portion of the system which controls the pitch of the propeller blades. Includes items such as governor synchronizers, switches, wiring, cables, levers, etc. Does not include any parts which rotate with the propeller assembly. Also includes all those units and components provided for the propulsor vector drive system. Includes flight deck control, drive motors, gear boxes, drive shafts, synchronizing shafts, etc.

System chapter	Sub system section	Title and definition
	-30	**Braking** That portion of the system which is used to decrease run-down time or stop propeller rotation during engine power-off conditions. Includes brake mechanisms, levers, pulleys, cables, switches, wiring, plumbing, etc.
	-40	**Indicating** That portion of the system used to indicate operation or activation of propeller/propulsor systems. Includes items such as light, switches, wiring etc.
	-50	**Propulsorduct** The complete duct assembly including vector drive attachment, fairings, stators, gear box covers, etc.
62		**Rotor(S)** Rotor head assembly (IES) and rotor blades, including the swash plate assembly (IES) and the rotor shaft unit (S) if not an integral part of the gear box (ES). Does not include the rotor anti-icing system which is dealt with in Chapter(System)30
	-00	**General**
	-10	**Rotor blades** Rotor blade assemblies, including the heating mate (electrical resistors) for anti-icing.
	-20	**Rotor head (S)** Complete rotor head (S), including blade folding system(S). Includes sleeves, spindles, dampers, rotor head fairing (s) as well as rotor shaft (S) and swash plate(S)if the rotor head and shaft constitute a non-dissociable assembly.
	-30	**Rotor shaft (S)/swash plateaus (IES)** If not included in 20
	-40	**Indicating** That portion of the system which indicates operation or activation of rotor systems. Includes items such as lights, gauges, switches, wiring, etc.

NSDC AMI NOT TO BE REPUBLISHED

System chapter	Sub system section	Title and definition
63		**Rotor drive(S)** Includes all components transmitting power to the rotor (s) : engine coupling components, drive shaft (s),clutch and free wheel units, gearbox(es),its(their) components, systems and securing elements.
	-00	**General**
	-10	**Engine/gear box couplings** Drive shaft(s) between engine(s) and main gear box (es) and, if applicable, clutch and free wheel unit(s).
	-20	**Gearbox (ES)** Part of the system driving the rotor (s). Includes the mechanical power take-off (s) and accessory drives but does not include the accessories themselves (alternators, hydraulic pumps, etc.). Includes the G.B. lubricating system (s)and the rotor brake (s) if the latter form (s)part of the G.B.(s).
	-30	**Mounts, attachments** Suspension bars, vibration damping system providing attachment of the G.B.(s) to the airframe.
	-40	**Indicating** That portion of the system which indicates operation or activation of rotor systems.Includes items such as lights, gauges, switches, wiring, etc.
64		**Tail rotor** Assembly that rotates in a plane nearly parallel to the symmetry plane and delivers a thrust opposing to the main rotor torque thus ensuring yaw control. Includes the rotor blades and rotor head. Does not include the rotor anti-icing system which is dealt with in Chapter(System)30.
	-00	**General**
	-10	**Rotor blades** Blade assemblies, including the heating mats (electrical resistors) for anti-icing.

System chapter	Sub system section	Title and definition
	-20	**Rotor head** Tail rotor head.
	-30	**Unassigned**
		Indicating
	-40	That portion of the system which indicates operation or activation of rotor systems. Includes items such as lights, gauges, switches, wiring, etc.
65		**Tail rotor drive** Includes all the components transmitting power to the tail rotor: driveshaft's, bearings, gearboxes.
	-00	**General**
	-10	**Shafts** Driveshaft's, bearings, flexible couplings.
	-20	**Gearboxes** Intermediate gearbox. Tail gearbox.
	-30	**Unassigned**
	-40	**Indicating** That portion of the system which indicates operation or activation of rotor systems. Includes items such as lights, gauges, switches, wiring, etc.
66		**Folding blades/pylon** The whole of the system ensuring automatic or manual folding and spreading of the rotor blades and/or tail pylon.
	-00	**General**
	-10	**Rotor blades** Part of the system ensuring rotor blade folding and spreading ;includes the mechanical, hydraulic and electrical means permanently fitted on the aircraft.
	-20	**Tail pylon** Part of system ensuring tail pylon folding and spreading ; includes mechanical, hydraulic and electrical means permanently fitted on the aircraft.

© NIMI NOT TO BE REPUBLISHED

System chapter	Sub system section	Title and definition
	-30	**Controls and indicating** Part of the system intended for controlling folding/spreading sequences and for indicating the system operation. Includes the control units, caption lights, indicators, wiring, etc.
67		**Rotors flight control** The system which provides means of manually controlling the flight attitude of the helicopter. Includes items such as control linkage and control cables for collective pitch, cyclic pitch, directional control, servo-controls and corresponding system. The trim system and the indicating and monitoring system.
	-00	**General**
	-10	**Rotor control** That portion of the system which controls the attitude by the angle of attack of the rotor blades. Includes items such as collective pitch lever, cyclic pitch stick and corresponding linkage and cable controls, coupling and mixing units, and artificial feel unit system. Also includes the control position indicating system.
	-20	**Anti-torque rotor control (yaw control)** That portion of the controls which control the direction of the helicopter (yaw control). Includes items such as tail rotor control pedals, relevant linkage and cable controls, bell cranks constituting the yaw control channel and the control position indicating system.
	-30	**Servo-control system** That portion of the system which from a power source ensures distribution to the rotor servo-control system. Includes items such as pressure relief valves, electro valves, check valves, accumulators and equipment needed for the operation of the servo control system, the servo controls, the systems used for monitoring and indicating the operation of the servo-control system.

System chapter	Sub system section	Title and definition
68		**Unassigned**
69		**Unassigned**
70		**Standard practices- engines**
71		**Power plant** The overall power package inclusive of engine, air in take, mount, cowling, scoops, cowl flaps.
	-00	**General** This topic shall include general information, limits and procedures. In the maintenance manual this section shall cover subjects such as engine changes, run-up, externally-mounted spare power plants, etc. In the over haul manual, this section shall cover subjects such as power plant build-up, tear down, etc.
	-10	**Cowling** Those removable coverings which extend over and around the power plant assembly. Includes the functioning and maintenance aspects of items such as accessory section cowls, cowl flaps, cowling supports, and attach and locking mechanisms, etc. Does not include the structure integral with the air frame which shall be covered in the applicable Structures chapter.
	-20	**Mounts** The frame work, either of build-up construction or forgings which support the engine and attach it to then a celle or pylon. Includes items such as engine mounts, vibration dampeners, support links, mounting bolts, etc.
	-30	**Fire seals** Those fire-resistant partition sand seals mounted on or about the power package for the purpose of isolating areas subject to fire. Does not include those fire-walls which are included in Chapter (System) 54.
	-40	**Attach fittings** Those fittings and brackets which are used for the support of equipment in and about the power package.

NOT TO BE REPUBLISHED © NIMI

System chapter	Sub system section	Title and definition
	-50	**Electrical harness** Those electrical cables, conduits, plugs, sockets, etc., which serve several power plant systems, but which are banded together to facilitate removal and installation of the power plant. Does not include the wiring which is specifically covered under another system.
	-60	**Air intakes** That portion of the power plant system which directs and may or may not vary the mass air flow to the engine. Includes items such as nose ring cowls, scoops, compress or fan cowls, buried engine ducts, vortex generators, actuators, control handles, cables, wiring, plumbing, linkages, doors, warning systems, position indicators, etc. Does not include integral structure with the air frame, which shall be included in the applicable Structures chapter.
	-70	**Engine drains** Those components and manifold assemblies which are used to drain off excess fluids from the power plant and its accessories. Includes drain lines, manifolds, tanks, flame arrestors, vents, and their supporting brackets, etc. Also includes components that are an integral part of, or fitted to the power plant cowling.
72		**Engine turbine/turboprop ducted fan/un-ducted fan**
	-00	**General**
		This topic is intended to cover general information, limits and procedures. In the engine over haul manual this section would include such subjects as teardown, cleaning, inspection, assembly, testing, etc.
	-10	**Reduction gear, shaft section (turbo-prop and/or front mounted gear Driven propulsion)** The section of the engine e which contains the propeller shafts and reduction gears. Includes items such as drives for hose mounted accessories, etc. If applicable, the section of the engine which uses mechanical force, through a gear-driven system, to drive front mounted propulsors which provide the majority of the energy generated. Includes items such as Propulsor Blades, Actuation Systems, Reduction Gears, Drive-Shafts, etc.
	-20	**Air inlet section** The section of the engine through which the air enters the compressor section. Includes items such as guide vanes, shrouds, cases, etc.
	-30	**Compressor section** The section of the engine in which the air is compressed. Includes items such as cases, vanes, shrouds, rotors, diffusers, etc. Also includes the maintenance and over haul of stat or blades but not the operation of variable stat or blades which is covered under Chapter (System)75-30. Does not include compressor bleed system.
	-40	**Combustion section** The section of the engine in which the air and fuel are combined and burned. Includes items such as burner cans, cases, etc.
	-50	**Turbine section** The section of the engine containing the turbines. Includes items such as turbine nozzles, turbine motors, cases, etc.
	-60	**Accessory drives** The mechanical power take-offs to drive accessories. Includes items such as engine-mounted gearboxes, gears, seals, pumps, etc. Does not include remotely installed gear boxes which are covered in Chapter (System)83.
	-70	**By-pass section** The section of the engine which by-passes a portion of the normal engine airflow (either ram or compressed air) for the prime purpose of adding to engine thrust or reducing specific fuel consumption.

NOT TO BE REPUBLISHED © NIMI

System chapter	Sub system section	Title and definition
	-80	**Propuls or section (rear mounted)** The section of the engine which contains a propulsor (s) and provides the majority of the energy generated. The propulsor may be turbine-driven or gear-driven. Includes such items as propuls or turbines, propulsor blades, blade actuation, and frames (rotating and/or stationary).
73		**Engine fuel and control** For turbine engines, those units and components and associated mechanical systems or electrical circuits which furnish or control fuel to the engine beyond the main fuel quick disconnect; and thrust augmenter, fuel flow rate sensing, transmitting and/or indicating units whether the units are before or beyond the quick disconnect. Includes coordinator or equivalent, engine driven fuel pump and filter assembly, main and thrust augmenter fuel controls, electronic temperature datum control, temperature datum valve, fuel manifold, fuel nozzles, fuel enrichment system, speed sensitive switch, relay box assembly, solenoid drip valve, burner drain valve, etc. For reciprocating engines, those units and components which deliver metered fuel and air to the engine. The fuel portion includes the carburettor/master control from the inlet side to the discharge nozzle (s), injection pumps, carburettor, injection nozzles and fuel primer. The air portion includes units from the scoop inlet to the vapour vent return, and the impeller chamber.
	-00	**General**
	-10	**Distribution** That portion of the system from the main quick disconnect to the engine, which distributes fuel to the engine burner section and the thrustaug mentor. Includes items such as plumbing, pumps, temperature regulators, valves, filters, manifold, nozzles, etc. Does not include the main or thrust aug mentor fuel control.

System chapter	Sub system section	Title and definition
	-20	**Controlling** The main fuel control which meters fuel to the engine and to the thrustaug mentor. Includes items such as hydro mechanical or electronic fuel control, levers, actuators, cables, pulleys, linkages, sensors, valves, etc., which are components of the fuel control units.
	-30	**Indicating** That portion of the system which is used to indicate the flow rate, temperature and pressure of the fuel. Includes items such as transmitters, indicators, wiring, etc. Does not include indication, if indication is accomplished as part of an integrated engine instrument system (Ref. Chapter (System)77-40).
74		**Ignition** Those units and components which generate, control, furnish, or distribute an electrical current to ignite the fuel air mixture in the cylinders of reciprocating engines or in the combustion chambers or thrustaug menters of turbine engines. Includes induction vibrators, magnetos, switches, lead filters, distributors, harnesses, plugs, ignition relays, exciters, and the electrical portion of spark advance.
	-00	**General**
	-10	**Electrical power supply** That portion of the system which generates electrical current for the purpose of igniting the fuel mixture in the combustion chambers and thrust augmenters. Includes items such as magnetos, distributors, booster coils, exciters, transformers, storage capacitors and compositors, etc.
	-20	**Distribution** That portion of the system which conducts high or low voltage electricity from the electrical power supply to the sparkplugs, or igniters. Includes wiring between magneto and distributor in those systems where they are separate units. Includes

NOT TO BE REPUBLISHED

System chapter	Sub system section	Title and definition
		items such as ignition harness, high tension leads, coils as used in "low tension" systems, sparkplugs, igniters, etc.
	-30	**Switching** That portion of the system which provides a means of rendering the electrical power supply inoperative. Includes items such as ignition switches, wiring, connectors, etc.
75		**AIR** For turbine engines, those external units and components and integral basic engine parts which go together to conduct air to various portions of the engine and to the extension shaft and torquemeter, assembly, if any. Includes compressor bleed systems used to control flow of air through the engine, cooling air systems and heated air systems for engine anti-icing. Does not include aircraft anti-icing, engine starting systems, nor exhaust supplementary air systems.
	-00	**General**
	-10	**Engineanti-icing** That portion of the system which is used to eliminate and prevent the formation of ice by bleed air in all parts of the engine, excluding power plant cowling which is covered under Chapter (System) 30. Includes items such as valves, plumbing, wiring, regulators, etc. Electrical anti-icing is covered in Chapter (System) 30.
	-20	**Cooling** That portion of the system which is used to ventilate the engine and accessories. Includes items such as valves, plumbing, wiring, jet pumps, vortex spoilers, etc.
	-30	**Compressor control** That portion of the system which is used to control the flow of air through the engine. Includes items such as governors, valves, actuators, linkages, etc. Also includes the operation of variable stator blades, but not the maintenance and over haul, which shall be covered under Chapter (System) 72-30.

System chapter	Sub system section	Title and definition
	-40	**Indicating** That portion of the system which is used to indicate temperature, pressure, control positions, etc., of the air systems. Includes items such as transmitters, indicators, wiring, etc
76		**Engine controls** Those controls which govern operation of the engine. Includes units and components which are inter connected for emergency shutdown. For turbo-propengines, includes linkages and controls to the coordinator or equivalent to the propeller governor, fuel control unit or other units being controlled. For reciprocating engines, includes controls for blowers. Does not include units or components which are specifically include din other chapters.
	-00	**General**
	-10	**Power control** That portion of the system which furnishes a means of controlling the main fuel control or coordinator. Includes controls to the propeller regulator on turbo propengines. Includes items such as linkages, cables, levers, pulleys, switches, wiring, etc. Does not include the units themselves.
	-20	**Emergency shutdown** That portion of the system which furnishes a means of controlling the flow off luids to and from the engine during emergency procedures. Includes items such as levers, cables, pulleys, linkages, switches, wiring, etc. Does not include the units themselves.
77		**Engine indicating** Those units, components and associated systems which indicate engine operation. Includes indicators, transmitters, analyzers, etc. For turbo-propengines include phase detectors. Does not include systems or items which are specifically included in other chapters except when indication is accomplished as

© NIMI NOT TO BE REPUBLISHED

System chapter	Sub system section	Title and definition
		part of an integrated engine instrument system (Ref. Chapter (System) 77-40).
	-00	**General**
	-10	**Power** That portion of the system which directly or indirectly indicates power or thrust. Includes items such as BMEP, pressure-ratio, RPM, etc.
	-20	**Temperature** That portion of the system which indicates temperatures in the engine. Includes items such as cylinder head, exhaust(turbine inlet),etc.
	-30	**Analyzers** That portion of the system which is used to analyze engine performance or condition by means of instruments or devices such as oscilloscopes, etc. Includes items such as generators, wiring, amplifiers, oscilloscopes, etc.
	-40	**Integrated engine instrument systems** That portion of the system which is an integrated concept receives several/all engine operating parameters and transmits this to a central processor for crew presentation. Includes items such as display units, transmitters, receivers, computers, etc.
78		**Exhaust** Those units and components which direct the engine exhaust gases overboard. For turbine engines, includes units external to the basic engine such as thrust reverser and noise suppressor. For reciprocating engines, includes augmenters, stacks, clamps, etc. Excludes exhaust-driven turbines.
	-00	**General**
	-10	**Collector/nozzle** That portion of the system which collects the exhaust gases from the cylinders or turbines and conducts them overboard. Includes items such as collect or rings, exhaust and thrust augment or ducts, variable nozzles,

System chapter	Sub system section	Title and definition
		actuators, plumbing, linkages, wiring, position indicators, warning systems, etc. Does not include power recovery turbines, turbo-superchargers, etc., not noise suppressors or thrust reversers where they are not an integral part of the nozzle system.
	-20	**Noise suppressor** That portion of the system which reduces the noise generated by the exhaust gases. Includes items such as pipes, baffles, shields, actuators, plumbing linkages, wiring, position indicators, warning systems, etc. Use-10whereintegralpartof nozzle system.
	-30	**Thrust reverser** That portion of the system which is used to change the direction of the exhaust gases for reverse thrust. Includes items such as clam shells, linkages, levers, actuators, plumbing, wiring, indicators, warning systems, etc. Use-10whereintegralpartof nozzle system.
	-40	**Supplementary air** That portion of the system which varies and controls supplementary airflow of the exhaust system. Includes items such as tertiary air doors, actuators, linkages, springs, plumbing, wiring, position indicators, warning systems, etc.
79		**Oil** Those units and components external to the engine concerned with storing and delivering lubricating oil to and from the engine. Covers all units and components from the lubricating oil engine out let to the inlet, including the inlet and outlet fittings, tank, radiator, by-pass valve, etc., and auxiliary oil systems.
	-00	**General**
	-10	**Storage** That portion of the system used for storage of oil. Includes items such as tanks, filling systems, internal hoppers, baffles, tank sump and drain, etc. Does not include tanks

NOT TO BE REPUBLISHED © NIMI

System chapter	Sub system section	Title and definition
		which are an integral portion of the engine.
	-20	**Distribution** That portion of the system which is used to conduct oil from and to the engine. Includes items such as plumbing, valves, temperature regulator, control systems, etc.
	-30	**Indicating** That portion of the system which is used to indicate the quantity, temperature and pressure of the oil. Includes items such as transmitters, indicators, wiring, warning systems, etc. Does not include indication if indication is accomplished as part of an integrated engine instrument system (Ref. Chapter(System) 77-40).
80		**Starting** Those units, components and associated systems used for starting the engine. Includes electrical, inertia air or other starter systems. Does not include ignition systems which are covered in Chapter (System)74.
	-00	**General**
	-10	**Cranking** That portion of the system which is used to perform the cranking portion of the starting operation. Includes items such as plumbing, valves, wiring, starters, switches, relays, etc.
81		**Turbines** For reciprocating engines only. Includes power recovery turbine assembly and turbo-super charger unit when external to the engine.
	-00	**General**
	-10	**Power recovery** The turbines which extract energy from the exhaust gases and are coupled to the crankshaft.
	-20	**Turbo-supercharger** The turbines which extract energy from the exhaust gases and drive an air compressor.

System chapter	Sub system section	Title and definition
82		**Water injection** Those units and components which furnish, meter and inject water or water mixtures in to the induction system, includes tanks, pumps, regulators, etc.
	-00	**General**
	-10	**Storage** That portion of the system which is used for the storage of water or water mixtures. Includes tank sealing, attachment of bladder type cells, ventilating system, cell and tank inter connectors, filling systems, etc.
	-20	**Distribution** That portion of the system which is used to conduct water or water mixtures from the tanks or cells to the engine. Includes items such as plumbing, cross feed system, pumps, valves, controls, etc.
	-30	**Dumping and purging** That portion of the system which is used to dump injection water and to purge the system. Includes items such as plumbing, valves, controls, etc.
	-40	**Indicating** That portion of the system which is used to indicate the quantity, temperature and pressure of the water mixtures. Includes items such as transmitters, indicators, wiring, etc.
83		**Accessory gear-boxes** Those units and components which are remotely installed and connected to the engine by a drive shaft and which drive multiple types of accessories. Does not include those accessory drives which are bolted to and are immediately adjacent to the engine. The latter item shall be covered under Chapter (System)72.
	-00	**General**
	-10	**Driveshaft section** That portion of the system which is used to conduct power from the engine to the gearbox. Includes items

NOT TO BE REPUBLISHED © NIMI

System chapter	Sub system section	Title and definition
		such as drive shaft, adapters, seals, etc.
	-20	**Gear box section** The case which contains the gear trains and shafts. Includes items such as gears, shafts, seals, oil pumps, coolers, etc.
84		**Propulsion augmentation** Those units and components that, independent of the primary propulsion system, furnish additional thrust of short duration. Includes solid or liquid propellents, controls, indicators, etc.
	-00	**General**
	-10	**Jet assist take off** Those units or components dedicated to jet assist take off (JATO) systems.
85		**Unassigned**
86		**Unassigned**
87		**Unassigned**

System chapter	Sub system section	Title and definition
88		**Unassigned**
89		**Unassigned**
90		**Unassigned**
91		**Charts** Miscellaneous charts not applicable to any particular system, such as spare wire charts, junction box charts, disconnect plug charts, conduit and wire routing charts, rigid tube charts, flexible hose charts and control cables
92		**Unassigned**
93		**Unassigned**
94		**Unassigned**
95		**Reserved for airline use**
96		**Reserved for air line use**
97		**Reserved for air line use**
98		**Reserved for air line use**
99		**Unassigned**

© NIMI NOT TO BE REPUBLISHED

Common damages on pipes

Objectives: At the end of this lesson you shall be able to
- **define pipe and tube**
- **describe the commons damage on pipes.**

Pipe

A hollow metal cylinder dimensioned to the Inside diameter with end connections consisting of tapered threads cut into the outside diameter.

Tube

A hollow metal cylinder dimensioned to the outside diameter to which flareless or flared fittings, or externally swaged fittings, roller swaged hydraulic fittings, or axially swaged hydraulic fittings will be mechanically attached or welded.

Tube Assembly

A tube with other components permanently attached. However, the tube assembly definition does not apply where any single component or end of an assembly meets the definition of duct or duct assembly. In this case, the assembly is a duct assembly.

Hose

A hose is a flexible hollow tube designed to carry fluids from one location to another.

Protective cap

The protective caps come in threaded or non-threaded options and multiple styles and materials. Minimise the threat of rust and pollution to the pipe's contents by preventing the entry of contaminants and foreign objects with a pipe end cap.

Plug

The pipe plugs are designed to insert into the end of tubing to dead-end the flow. Various materials are used to manufacture high quality tube plugs in a variety of end connections.

Damages

Wrinkle

A radial or longitudinal deformation. Radial wrinkles are measured from peak to valley. Longitudinal wrinkles are measured according to their height above the natural curvature of the tube.

Crack

A parting or cleft due to fracture of the solid metal.

Scratch

A mark which may run in any direction and is, or appears to be, a cut or tear in the surface of the material.

Dent

A hollow or a depression in the tube or duct wall. The surface of the wall material is not cut or removed.

Nick

Sharp bottom indentation on the surfaces produced by forceful impact or abrasion with a length less than three times longer than its width.

Gouge

A defect wherein the surface of the material itself is actually broken or removed sufficiently to cause local thinning. Usually the gouge will have sharp edges and corners.

Fluid lines and fittings

Objectives: At the end of this lesson you shall be able to
- **state the type of fluid lines used**
- **list the materials of pipes**
- **state the type of fitting.**

Aircraft fluid lines are usually made of metal tubing or flexible hose. Rigid fluid lines, also called metal tubing, is used in stationary applications. They are widely used in aircraft for fuel, oil, coolant, oxygen, instrument, and hydraulic lines.

Flexible hose is generally used with moving parts or where the hose is subject to considerable vibration.

Rigid fluid lines tubing materials

Aluminium Alloy Tubing

Tubing made from 1100-H14 or 3003-H14 is used for general purpose lines of low or negligible fluid pressures, such as instrument lines and ventilating conduits.

Tubing made from 2024-T3, 5052-O and 6061-T6 is used in general purpose systems of low and medium pressures, such as hydraulic, pneumatic, fuel and oil lines.

Corrosion resistant steel

Corrosion resistant steel tubing, either annealed CRES 304, CRES 321 is used extensively in high pressure hydraulic systems (3,000 psi or more) for the operation of landing gear, flaps, brakes and in fire zones.

© NIMI NOT TO BE REPUBLISHED

Its higher tensile strength permits the use of tubing with thinner walls.

CRES lines are used where there is a risk of foreign object damage (FOD); i.e., the landing gear and wheel well areas.

Titanium 3AL-2.5V

This type of tubing and fitting is used extensively in transport category and high-performance aircraft hydraulic systems for pressures above 1,500 psi.

Cryofit or swaged fittings are used with titanium tubing.

> **Do not use titanium tubing and fittings in any oxygen system assembly.**
>
> **Titanium and titanium alloys are oxygen reactive.**
>
> **If a freshly formed titanium surface is exposed in gaseous oxygen, spontaneous combustion could occur at low pressures.**
>
> **Flexible hose fluid lines**

Flexible hose is used in aircraft fluid systems to connect moving parts with stationary parts in locations subject to vibration or where a great amount of flexibility is needed. It can also serve as a connector in metal tubing systems.

Fittings

Rigid tubing may be joined to either an end item another section of either rigid tubing, or to a flexible hose.

In the case of connection to an end item or another tube, fittings are required, which may or may not necessitate flaring of the tube.

In the case of attachment to a hose, it may be necessary to bead the rigid tube so that a clamp can be used to hold the hose onto the tube.

Straight unions and adapters - Fig 1

Fig 1

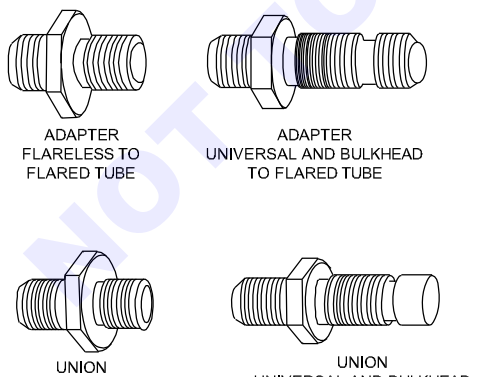

AFN326011

Elbows and cross - Fig 2

Fig 2

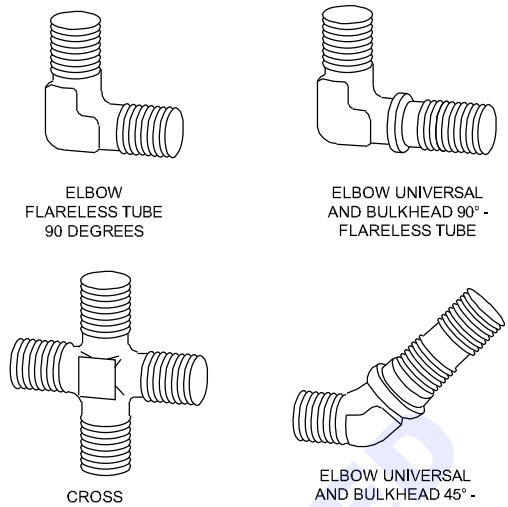

AFN326012

Tees - Fig 3

Fig 3

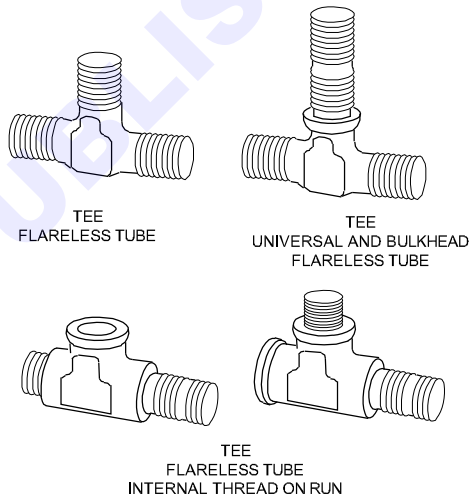

AFN326013

Reducer - Fig 4

Fig 4

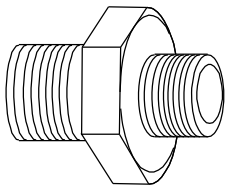

AFN326014

Bushing - Fig 5

Fig 5

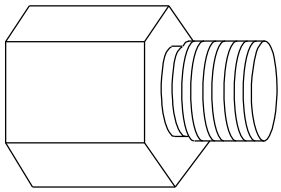

AFN326015

© NIMI NOT TO BE REPUBLISHED

Plug and cap - Fig 6

Fig 6

Rigid pipe fabrication - Cutting

Objectives: At the end of this lesson you shall be able to
- **state the tools used to cut pipe**
- **explain how to cut pipe.**

When cutting tubing, it is important to produce a square end, free of burrs.

Tubing may be cut with a tube cutter or a hacksaw.

The cutter can be used with any soft metal tubing, such aluminium alloy.

Special cutters are available for cutting aluminium alloy, corrosion resistant steel and titanium tubing. (Fig 1)

Fig 1

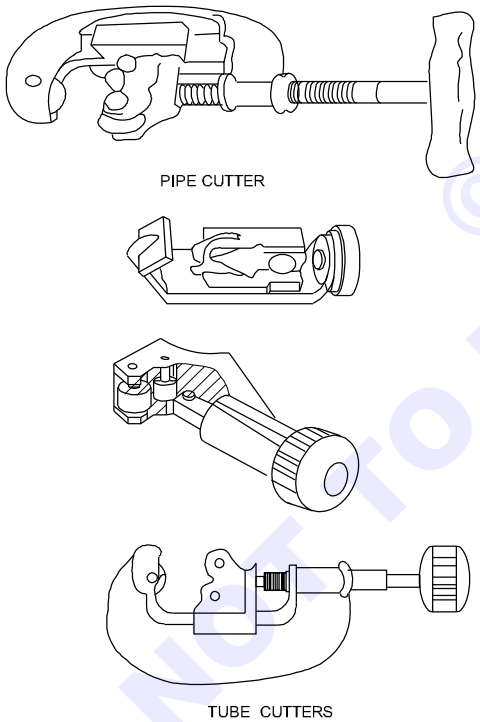

A new piece of tubing should be cut approximately 10 percent longer than the tube to be fabricated to provide for minor variations in bending.

Cutting process

Correct use of the tube cutter is shown in Fig 2.

Place the tubing in the cutting tool, with the cutting wheel at the point where the cut is to be made.

Fig 2

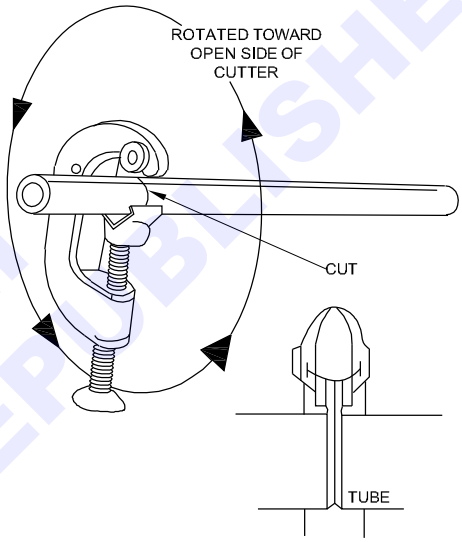

Rotate the cutter around the tubing, applying a light pressure to the cutting wheel by intermittently twisting the thumbscrew.

Too much pressure on the cutting wheel at one time could deform the tubing or cause excessive burring.

After cutting the tubing, carefully remove any burrs from inside and outside the tube. Use a knife or the burring edge attached to the tube cutter.

When performing the deburring operation, use extreme care that the wall thickness of the end of the tubing is not reduced or fractured.

Very slight damage of this type can lead to fractured flares or defective flares which will not seal properly. Use a fine-tooth file to file the end square and smooth.

If a tube cutter is not available, or if tubing of hard material is to be cut, use a fine-tooth hacksaw (preferably one having 32 teeth per inch).

The use of a saw will decrease the amount of work hardening of the tubing during the cutting operation. After sawing, file the end of the tube square and smooth, removing all burrs.

© NIMI NOT TO BE REPUBLISHED

Rigid pipe fabrication - Bending

Objectives: At the end of this lesson you shall be able to
- **state the tool used to bend pipe**
- **explain how to bend pipe**
- **list the bending defects**

The objective in tube bending is to obtain a smooth bend without flattening the tube.

Tubing under 1/4" in diameter usually can be bent without the use of a bending tool.

For larger sizes, either portable hand benders (Fig 1) or production benders are usually used.

Fig 1

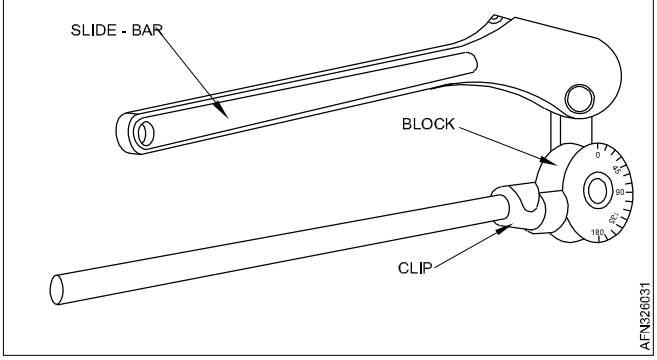

Bending process (Fig 2)

Using a hand bender, insert the tubing into the groove of the bender, so that the measured end is left of the form block.

Align the two zeros and align the mark on the tubing with the L on the form handle.

If the measured end is on the right side, then align the mark on the tubing with the R on the form handle. With a steady motion, pull the form handle till the zero mark on the form handle lines up with the desired angle of bend, as indicated on the radius block.

Bend the tubing carefully to avoid excessive flattening, kinking, or wrinkling.

A small amount of flattening in bends is acceptable, but the small diameter of the flattened portion must not be less than 75 percent of the original outside diameter.

Tubing with flattened, wrinkled, or irregular bends should not be installed.

Wrinkled bends usually result from trying to bend thin wall tubing without using a tube bender.

Excessive flattening will cause fatigue failure of the tube. Examples of correct and incorrect tubing bends are shown in Fig 3.

Fig 2

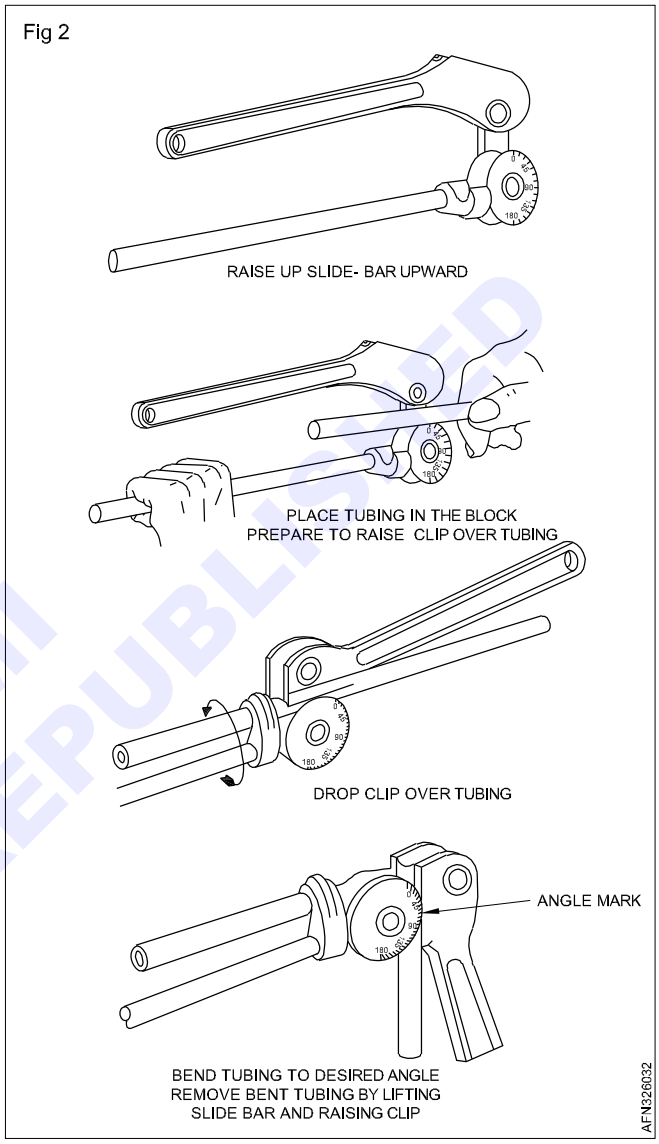

Fig 3

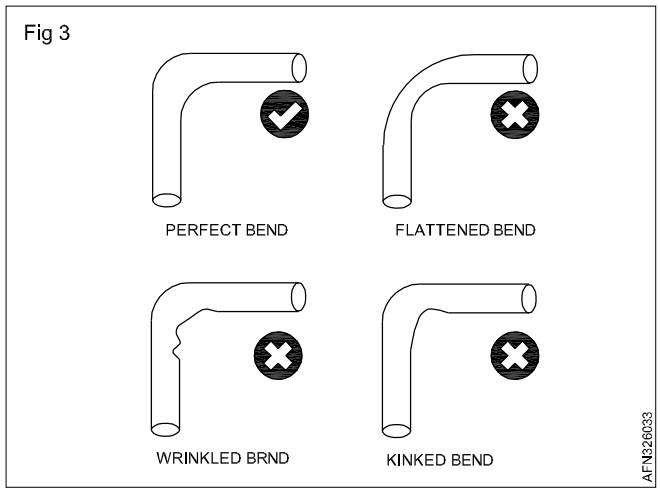

© NIMI NOT TO BE REPUBLISHED

Rigid pipe fabrication - Flaring

Objectives: At the end of this lesson you shall be able to
- **state the tools used to flare pipe**
- **explain how to flare pipe**

Two kinds of flares (Fig 1) are generally used in aircraft tubing:

- Single flare.
- Double flare.

Fig 1

Flares are frequently subjected to extremely high pressures; therefore, the flare on the tubing must be properly shaped or the connection will leak or fail.

A flare made too small produces a weak joint, which may leak or pull apart; if made too large, it interferes with the proper engagement of the screw thread on the fitting and will cause leakage (Fig 2).

A crooked flare is the result of the tubing not being cut squarely.

Fig 2

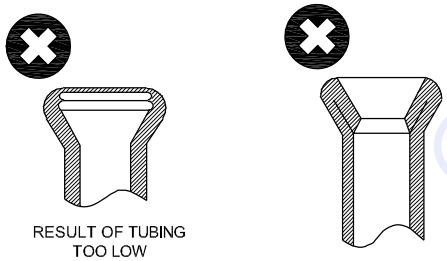

If a flare is not made properly, flaws cannot be corrected by applying additional torque when tightening the fitting. The flare and tubing must be free from cracks, dents, nicks, scratches, or any other defects.

The flaring tool used for aircraft tubing has male and female dies ground to produce a flare of 35° to 37°.

Under no circumstance is it permissible to use an automotive-type flaring tool which produces a flare of 45°.

Single flaring

The single-flare hand flaring tool, similar to that shown in Fig 3 and 4, is used for flaring tubing.

The tool consists of a flaring block or grip die, a yoke, and a flaring pin. The flaring block is a hinged double bar with holes corresponding to various sizes of tubing. These holes are countersunk on one end to form the outside support against which the flare is formed.

The yoke is used to center the flaring pin over the end of the tube to be flared.

Two types of combination flaring tools (Fig 3) are used to make flares on tubing:

- Screw/rolling type.
- Impact type.

Fig 3

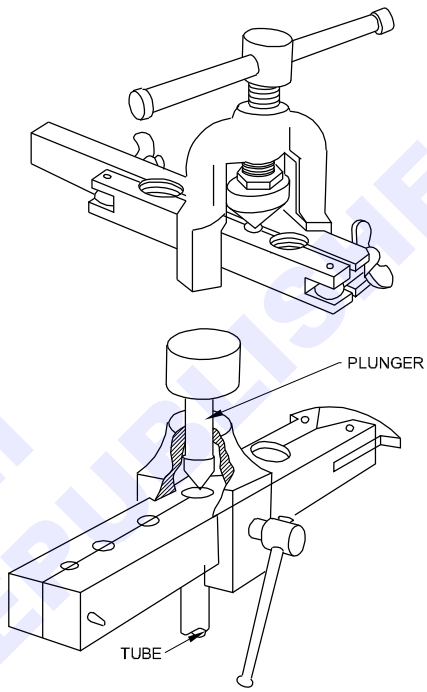

Fig 4

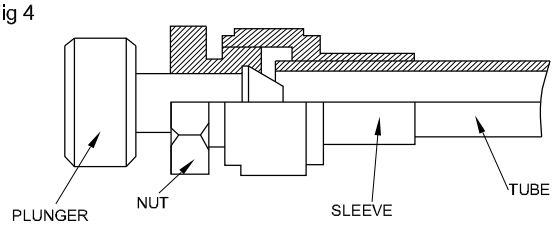

Double Flaring

A double flare is used on soft aluminum alloy tubing 3/8” outside diameter and under.

This is necessary to prevent cutting off the flare and failure of the tube assembly under operating pressures. A double flare is smoother and more concentric than a single flare and therefore seals better.

It is also more resistant to the shearing effect of torque.

NOT TO BE REPUBLISHED © NIMI

Double Flaring Instructions

Deburr both the inside and outside of the tubing to be flared.

Open the flaring tool (Figure 5) by unscrewing both clamping screws. Select the hole in the flaring bar that matches the tubing diameter and place the tubing with the end you have just prepared, extending above the top of the bar by a distance equal to the thickness of the shoulder of the adapter insert.

Tighten clamping screws to hold tubing securely.

Insert pilot of correctly sized adapter into tubing.

Slip yoke over the flaring bars and centre over adapter.

Advance the cone downward until the shoulder of the adapter rests on the flaring bar.

This bell-out the end of the tubing. Next, back off the cone just enough to remove the adapter.

After removing the adapter, advance the cone directly into the belled end of the tubing.

This action folds the tubing on itself and forms an accurate double flare without cracking or splitting the tubing.

To prevent thinning out of the flare wall, do not over tighten.

Fig 5

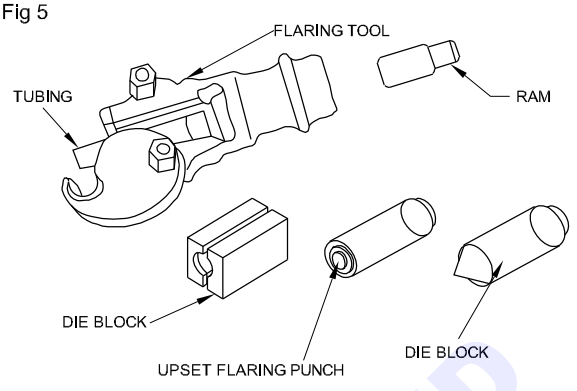

DOUBLE FLARING TOOL

Rigid pipe fabrication - Beading

Objectives: At the end of this lesson you shall be able to
- **list the tool used to make a bead on pipe**
- **state how to make a bead on pipe**

Fig 1

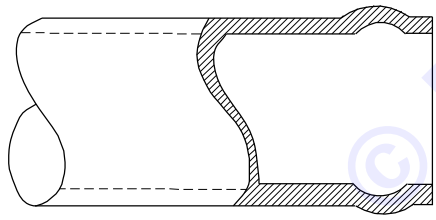

BEAD

Tubing may be beaded with a hand beading tool, with machine beading rolls, or with grip-dies. The grip-die method of beading is confined to very small tubing.

The method to be used depends on the diameter and wall thickness of the tube and the material from which it was made.

The hand beading tool is used with tubing having 1/4" to 1" outside diameter. (Fig 2)

The bead is formed by using the beading machine frame with the proper rollers attached.

The inside and outside of the tube are lubricated with light oil to reduce the friction between the rollers during beading.

The sizes, marked in sixteenths of an inch on the rollers, are for the outside diameter of the tubing that can be beaded with the rollers.

Separate rollers are required for the inside of each tubing size, and care must be taken to use the correct parts when beading.

Fig 2

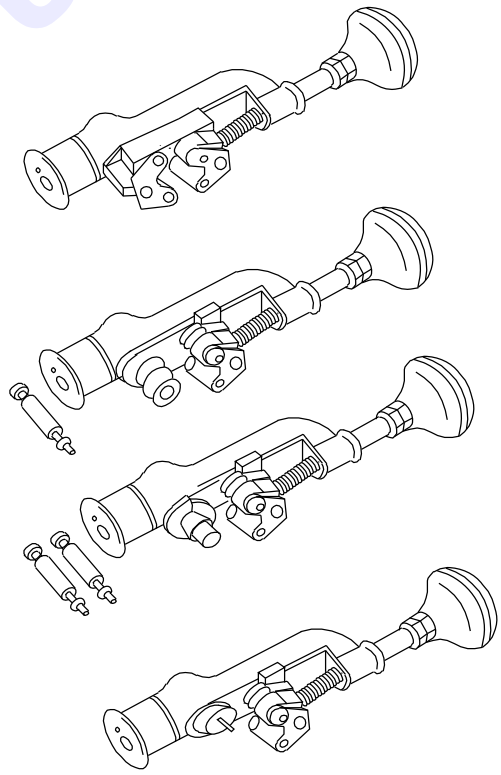

TUBE BEADING TOOL

The hand beading tool works somewhat like the tube cutter in that the roller is screwed down intermittently while rotating the beading tool around the tubing.

© NIMI NOT TO BE REPUBLISHED

Fig 3

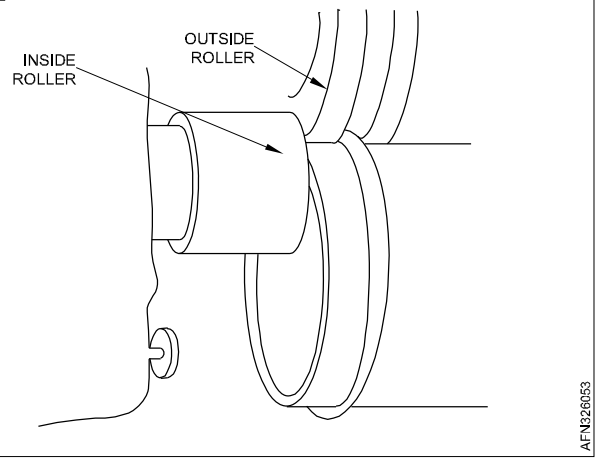

In addition, a small tube holderis furnished with the kit.

Other methods and types of beading tools and machines are available, but the hand beading tool is used most often.

As a rule, beading machines are limited to use with large diameter tubing, over 1-15/16”, unless special rollers are supplied.

© NIMI
NOT TO BE REPUBLISHED

Air conditioning system – ATA21 – Brief description

Objectives: At the end of this lesson you shall be able to
- **describe the ATA21 sections**
- **list the mains components of air conditioning system.**

21		**Air Conditioning** Those units and components which furnish a means of pressurizing, heating, cooling, moisture controlling, filtering and treating the air used to ventilate the areas of the fusel age within the pressure seals. Includes cabin super charger, equipment cooling, heater, heater fuel system, expansion turbine, valves, scoops, ducts, etc.
	-00	GENERAL
	-10	COMPRESSION That portion of the system and its controls which supplies compressed air. Includes items such as controls and indicating systems related to the compressors, wiring, etc. Does not include the pressure control and indicating system for the cabin pressurization.
	-20	DISTRIBUTION That portion of the system used to induct and distribute air. Includes equipment rack cooling systems and items such as blowers, scoops, ducting, inlets, check valves, wiring, etc. Does not include valves which Are part of pressurization and temperature control.
	-30	PRESSURIZATION CONTROL That portion of the system used to control the pressure within the fuselage. Includes items such as control valves, relief valves, indicators, switches, amplifiers, wiring, etc.
	-40	HEATING That portion of the system and its controls which supply heated air. Includes items such a shearer panels and other units, fuel system and control, ignition, indicating systems related to heater operation, wiring, etc. Does not include temperature control and indicating systems.
	-50	COOLING That portion of the system and its controls which supply cooled air. Includes items such as the cooling unit, indicating systems related to the cooler operation, wiring, etc. Does not include temperature control and indicating systems.
	-60	TEMPERATURE CONTROL That portion of the system used to control the temperature of the air. Includes items such as control valves, thermal sensing devices, switches, indicators, amplifiers, wiring, etc.
	-70	MOISTURE AIR CONTAMINANT CONTROL That portion of the system used to control moisture in the air, to control ozone concentrations, to filter radioactive debris from conditioned air, and to treat the air with deodorizers, insecticides, etc.

The air conditioning system main function is to keep the air in the pressurized fuselage compartments at the correct pressure and temperature. In details, this system provides the following functions:

- Cabin temperature control,
- Pressurisation control,
- Avionics ventilation and cooling,
- Optional cargo compartment ventilation and heating.

The pressurisation control system controls the pressure in thefuselage. It operates fully automatically and has a manual backup.The pressure change rate is controlled to

NOT TO BE REPUBLISHED © NIMI

give satisfactory pressure values of safety and comfort for the passengers and crew.

The air-cooling system decreases the temperature of the hot bleed air from the pneumatic system. It also reduces the quantity of water in the hot bleed air.

The temperature control system controls the temperature of the air supplied to the cockpit and cabin.

Overview

The engine bleed system method is adopted in most types of turbojet aircraft, in which hot air, readily available from main engine compressors is tapped off and supplied to the cabin. Before the air enters in the crew and passengers' compartment, it is passed through appropriate control valves and a temperature control system to reduce its pressure and temperature.

Air supply, Auxiliary Power Unit

The auxiliary power unit is an independent source of pressurised air.

Air supply, Compressors or blowers

This air supply is utilised in some aircraft. The compressors or blowers being driven by the engines via accessory drives, gear boxes or bleed air.

Air is drawn in through a ram air intake located in a wing leading edge or an engine nacelle fairing. A filter unit may be provided to protect the blower rotors from foreign matter and to ensure a clean air supply. In order to reduce the level of noise emanating from the blower, silencers are incorporated in the main supply ducting.

Heating

Engine bleed air system employs compression heating. This system of heating relies on the principle whereby the air temperature is increased by compression and forms the basis of the heating method employed air supply system utilising engine driven compressors or engine bleed air.

Cooling

The operation of an air-cooling system is based on the principal of dissipating heat by converting its energyinto work. The principle components of a typical system are the primary and secondary air-to- air heat exchangers, a turbo-compressor cold air unit and a water separator.

Distribution

The air is distributed by a ducting system. The layout of which depends on the typeof aircraft and its air conditioning system.

Fig 1

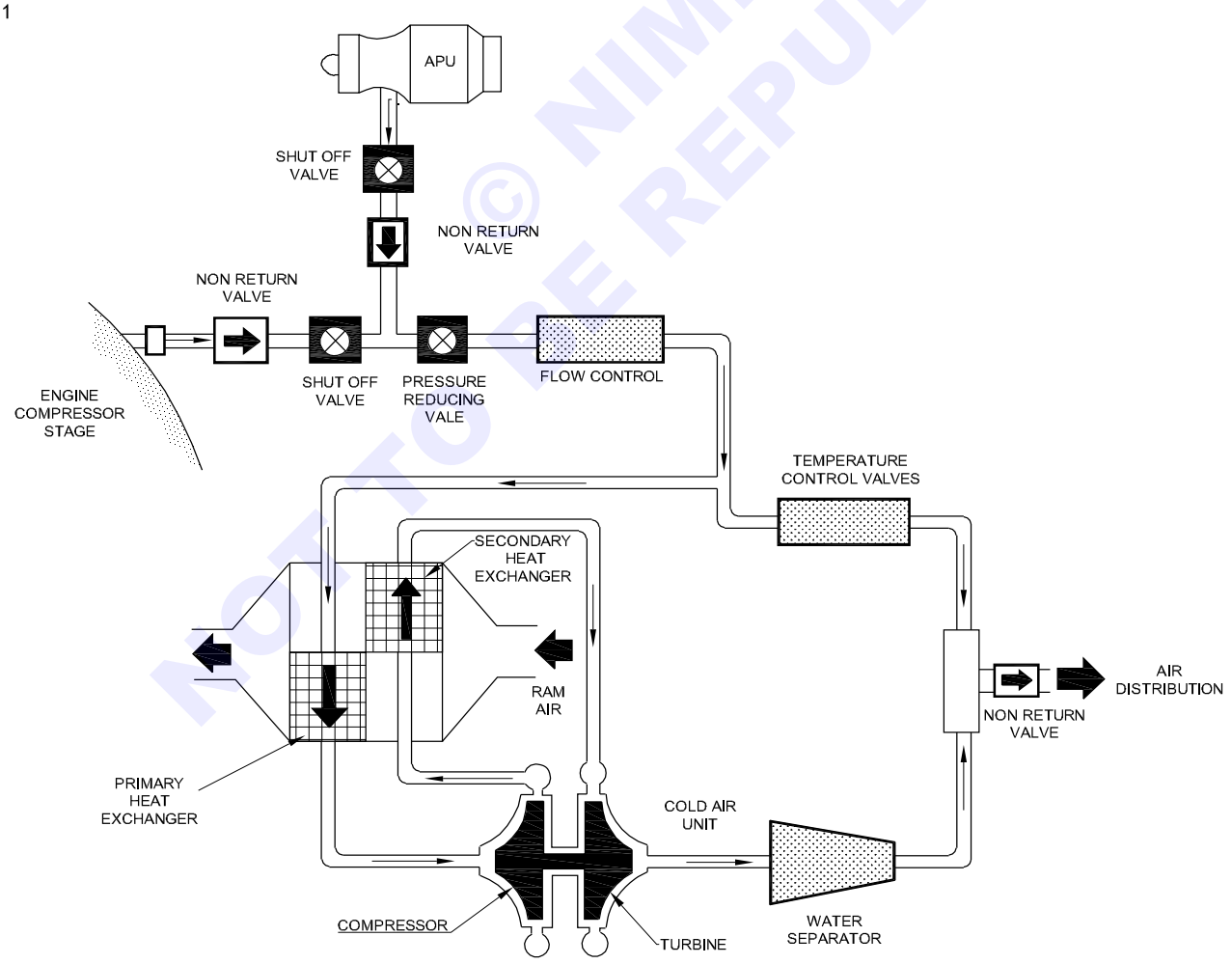

TYPICAL BLEED AIR SYSTEM

AFN326111

© NIMI NOT TO BE REPUBLISHED

In a basic system, such as that employing a ram air supply and combustion heating (Fig1) the ducting is generally in two distinct sections and provides for separate flows of cold and heated air.

The outlets for cold air are normally of the adjustable louvre type and are installed so that air flows from such points as below hat racks, cockpit and cabin sidewalls.

Heated air is distributed through outlet grilles situated at floor level. The degree of heat being regulated by mechanical valves directly controlled at the outlets, or by control knobs in the flight compartment. The heated air duct also hasa branch duct which directs heated air to the wind shield panels for demisting purposes.

Fig 2

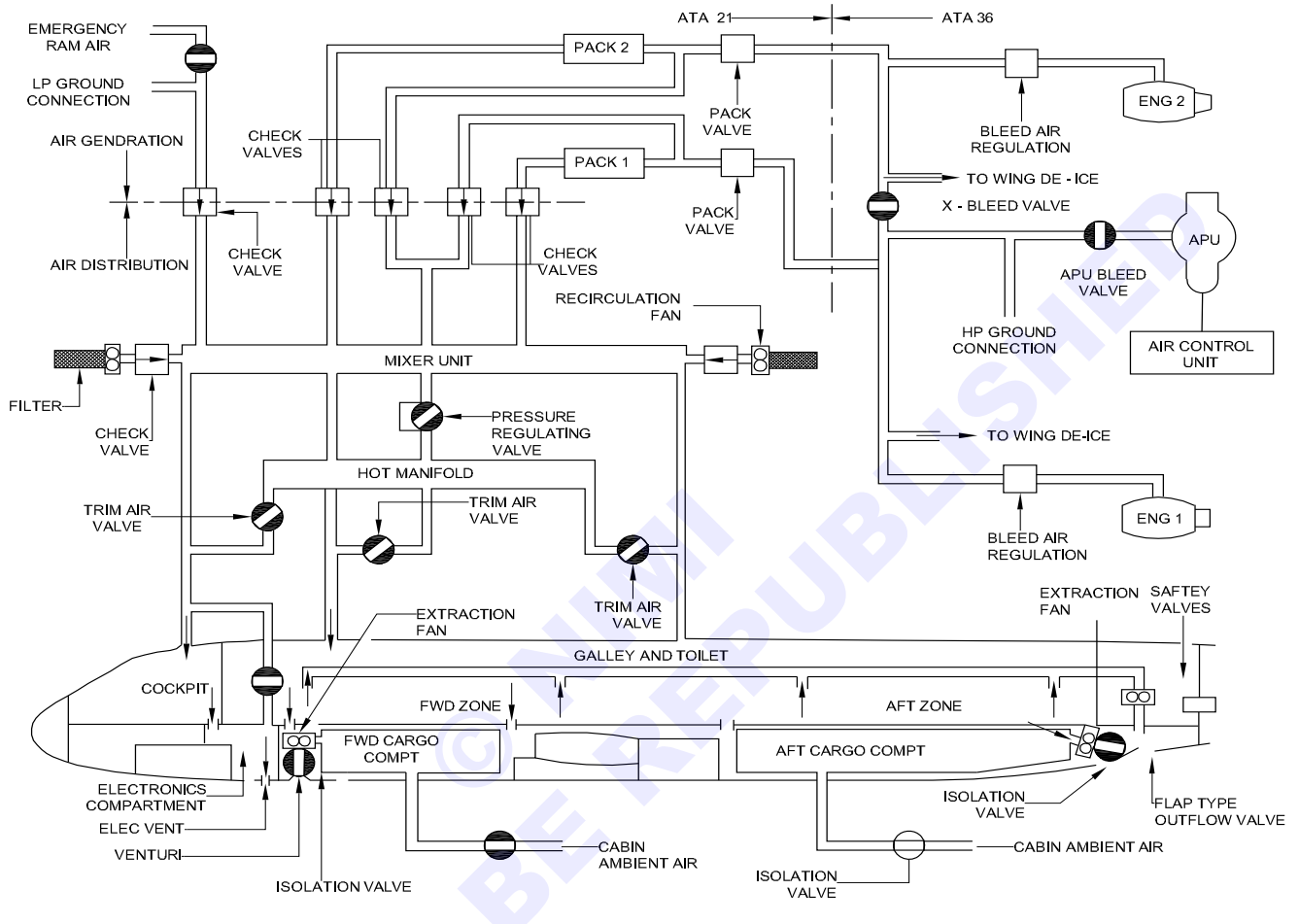

AIR BUS A320 AIR CONDITIONING SYSTEM OVERVIEW AND RELATION BETWEEN ATA21 AND ATA36

Flight control systems – ATA27 – Brief description

Objectives: At the end of this lesson you shall be able to
- **describe the ATA27 sections**
- **list the mains components of flight control systems**

System chapter	Sub system section	Title and definition
27		FLIGHT CONTROLS Those units and components which furnish a means of manually controlling the flight attitude characteristics of the aircraft, including items such as hydraulic boost system, rudder pedals, controls, mounting brackets, etc. Also includes the functioning and maintenance aspects of the flaps, spoilers and other control surfaces, but does not include the structure which is covered in the Structures Chapters. Does not include rotorcraft rotor controls which are covered in Chapter(System)65.
	-00	GENERAL

NOT TO BE REPUBLISHED © NIMI

	-10	AILERON&TAB That portion of the systems which controls the position and movement of the ailerons/elevens and tabs. Includes items such as the control wheels, cables, boosters, link ages, control surfaces, indicators, etc.
	-20	RUDDER&TAB That portion of the systems which controls the position and movement of the rudder and rudder tabs. Include site ms such as the rudder pedals, tab control wheel, cables, boosters, linkages, control surfaces, position indicators, etc.
	-30	ELEVATOR&TAB That portion of the systems which controls the position and movement of the elevator/eleven and tabs. Includes items such as the control column, stick shaker units, automatics tall recovery devices, tab control wheels, cables, boosters, linkages, controls surfaces, position indicators, stall warning systems, etc.
	-40	HORIZONTAL STABILIZER That portion of the system which controls the position and movement of the horizontal stabilizer/canard. Includes items such as control handle, cables, jackscrews, motors, warning systems, linkages, control surfaces, position indicators, etc.
	-50	FLAPS That portion of the systems which controls the position and movement of the trailing edge flaps. Includes items such as control handles, cables, actuators, warning systems, linkages, control surfaces, position indicators, etc.
	-60	SPOILER, DRAG DEVICES AND VARIABLE AERODYNAMIC FAIRINGS That portion of the systems which controls the position and movement of the spoilers, drag devices and variable aero dynamic fairings. Includes fairings. Includes items such as control handles, cables, warning systems, linkages, spoilers, drag devices, position indicators, etc.
	-70	GUSTLOCK&DAMPENER That portion of the systems which protects the control surfaces from movement by wind while the air craft is on the ground. Does not include locking the control by means off-light control boost system.
	-80	LIFT AUGMENTING That portion of the systems which controls the position and movement of variable opening wings lots, leading edge wing flaps, and other similar auxiliary devices used for increasing aerodynamic lift. Includes items such as control handles, cables, actuators, linkages, warning systems, control surfaces, position indicators, etc. Does not include trailing edge flaps.

All aircraft are governed by the same basic principles of flight control, whether the vehicle is the most sophisticated high-performance fighter or the simplest model aircraft.

Primary flight control (Fig 1)

Primary flight control in pitch, roll and yaw is provided by the control surfaces: ailerons, elevators, and rudder. Speed-brakes are deployed when all of the over-wing spoilers are extended together which has the effect of reducing lift as well as increasing drag. Spoilers are used for decreasing wing lift; however, their specific design, function, and use vary with different aircraft.

Secondary flight control (Fig 2)

Flap control is located on the inboard two thirds of the wing trailing edges. Deployment of the flaps during take-off or landing extends the flap sections rearwards and downwards to increase wing area and camber, thereby greatly increasing lift for a given speed.

Slats are movable control surfaces attached to the leading edge of the wing. In a similar fashion to the flaps described above, this has the effect of increasing wing area and camber and therefore overall lift.

Flight control linkage systems

Pitch control

The elevators are operated by a fore-and-aft movement of the control stick or yoke. Raising the elevators causes the aircraft to climb. Lowering the elevators causes it to dive or descend. The pilot raises the elevators by pulling back on the stick or yoke and lowers them by pushing the stick or yoke forward.

Roll control

The ailerons are operated by a lateral (side-to-side) movement of the control stick or a turning motion of the wheel on the yoke. The ailerons are interconnected in the control system and work simultaneously, but in opposite directions to one another. As one aileron moves downward to increase lift on its side of the fuselage, the aileron on the opposite side of the fuselage moves upward to decrease lift.

NOT TO BE REPUBLISHED

Yaw control

The rudder is connected to the rudder pedals and is used to move the aircraft about the vertical axis. If the pilot moves the rudder to the right, the aircraft turns to the right; if the rudder is moved to the left, the aircraft turns to the left. The pilot moves the rudder to the right by pushing the right rudder pedal, and to the left by pushing the left rudder pedal.

Fig 1

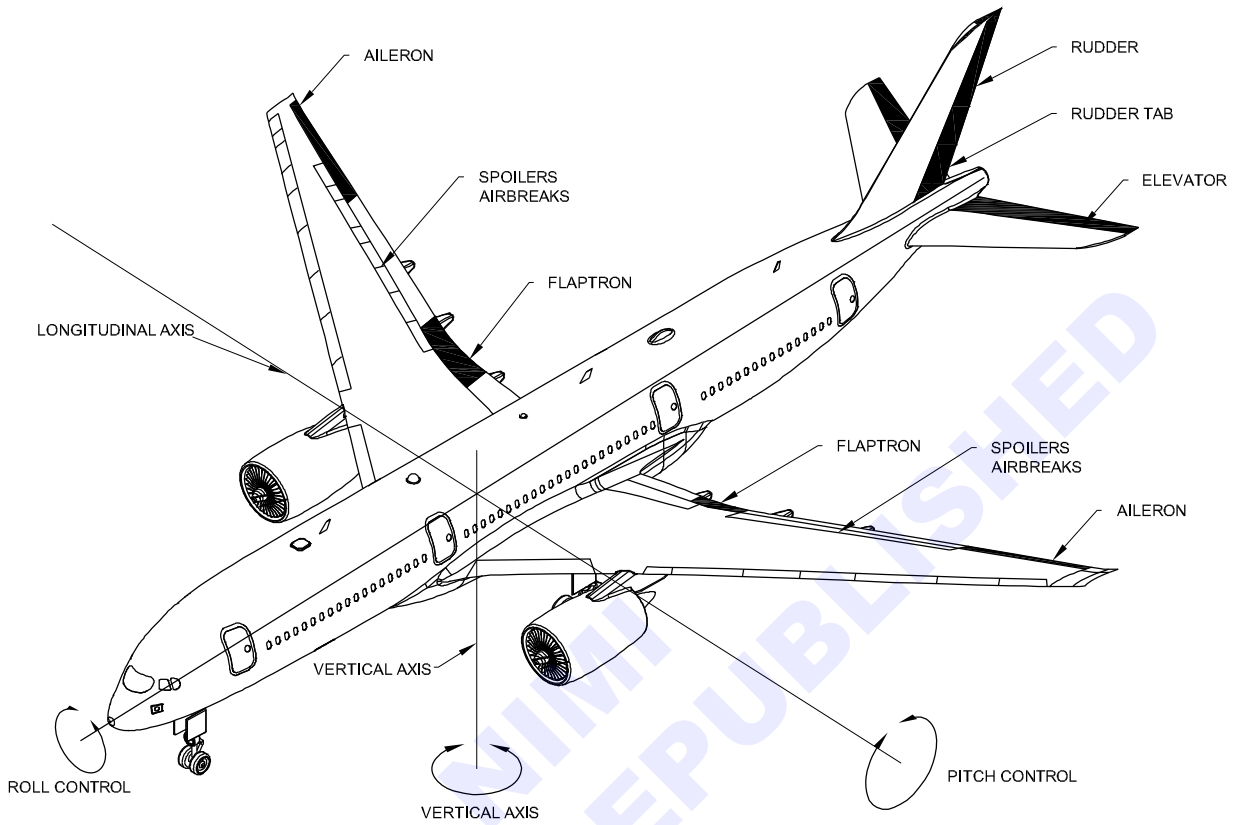

PRIMARY FLIGHT CONTROL

AFN326121

Fig 2

SECONDARY FLIGHT CONTROL

AFN326122

© NIMI NOT TO BE REPUBLISHED

Fuel system – ATA28 – Brief description

Objectives: At the end of this lesson you shall be able to
- **describe the ATA28 sections**
- **list the mains components of fuel system**

System chapter	Sub system section	Title and definition
28		FUEL Those units and components which store and deliver fuel to the engine. Includes engine driven fuel pumps for reciprocating engines includes tanks (bladder), valves, boost pumps, etc., and those components which furnish means of dumping fuel overboard. Includes integral and tip fuel tank leak detection and sealing. Does not include the structure of integral or tip fuel tanks and the fuel cell backing boards which are covered in the Structures Chapters, and does not include fuel flow rate sensing, transmitting and/or indicating, which are covered in Chapter(System) 73.
	-00	GENERAL
	-10	STORAGE That portion of the system which stores fuel. Includes tank sealing, bladder type cells, ventilating system, cell and tank inter-connectors, over wing filler necks and caps, etc. Also includes reservoir feed pumping systems and reservoirs within the tanks which are not part of the distribution system.
	-20	DISTRIBUTION That portion of the system which is used to distribute fuel from the filler connector to the storage system and from the storage system to and including the power plant fuel quick disconnect.Includes items such as plumbing, pumps, valves, controls,etc.
	-30	DUMP That portion of the system which is used to dump fuel over board during flight.Includes items such as plumbing, valves, controls, chutes, etc.
	-40	INDICATING That portion of the system which is used to indicate the quantity, temperature, and pressure of the fuel. Includes pressure warning systems for pumping systems within the tank, etc. Does not include engine fuel flow or pressure.

Description and overview

The purpose of an aircraft fuel system is primarily to provide a reliable supply of fuel to the engines. Without the motive power provided by them the aircraft is unable to sustain flight.

Modern aircraft fuel management and gauging systems are based upon a plenty of valves, pumps, probes, level sensors, switches etc. controlled by microprocessor-based systems. In modern turbine-powered aircraft, the fuel is usually contained in a number of integral tanks, in the wings and centre section, and, occasionally, in the fin.

Individual engines are usually fed from an associated tank, or group of tanks, but cross-feed and inter-engine valves may be provided to enable the engines to be fed from any desired group of tanks, and also to permit fuel transfer between tanks. Fuel supplies for auxiliary power-units and combustion heaters, where fitted, are normally taken direct from a suitable tank or from a feed line.

Fuel transfer pumps perform the task of transferring fuel between the aircraft fuel tanks to ensure that the engine fuel feed requirement is satisfied. Fuel booster pumps, also called engine feed pumps, are used to boost the fuel flow from the aircraft fuel system to the engine.

A variety of fuel valves will typically be utilised in an aircraft fuel system. Valves are used to regulate and control the flow of fuel in the aircraft and engine fuel systems.

Shutoff valves are two-position (open and closed) valves.

Check valves are installed in the fuel system wherever fuel flow in one direction is required. Strainers are installed in the tank outlets and frequently in the tank filler necks. These strainers are of fairly coarse mesh and prevent only the larger particles from entering the fuel system. Other strainers are provided in the fuel inlets and in the fuel lines themselves.

NOT TO BE REPUBLISHED

Fuel lines and identification marking

The fuel lines between the various tanks and between the tanks and the engine-driven pump are of the conventional type. They consist of metal tubing or flexible hose. The majority of rigid tubing used is manufactured from aluminium. However, exposed lines and lines subject to abrasion or intense heat are made of stainless steel

Fig 1

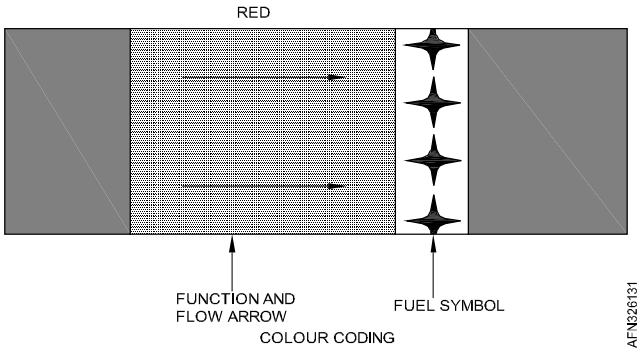

Fig 2

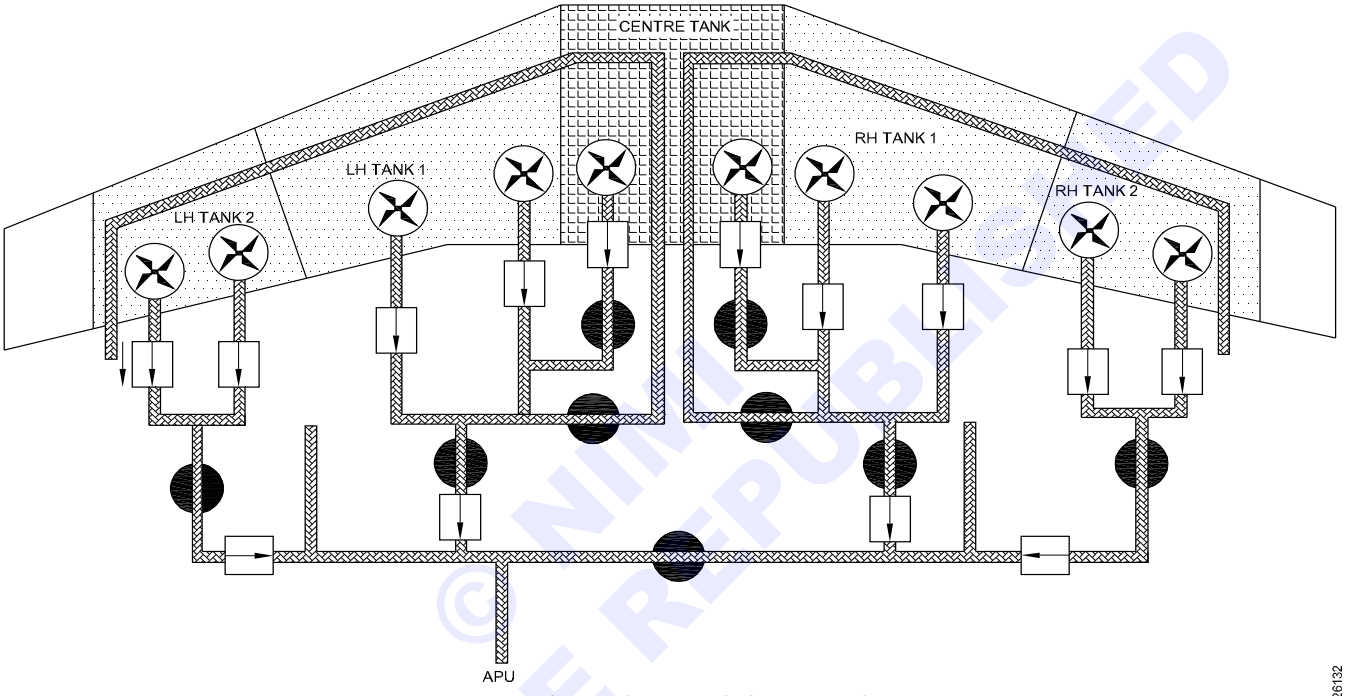

EXAMPLE OF TYPICAL FUEL SYSTEMAIRBUS A320

Fig 3

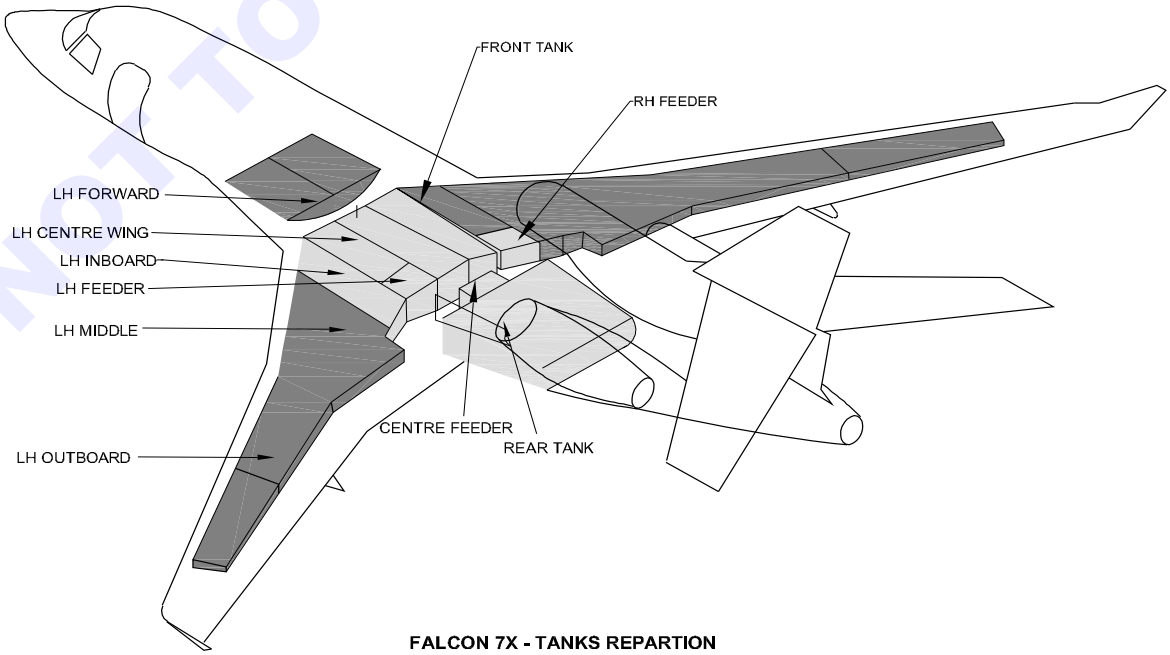

FALCON 7X - TANKS REPARTION

NOT TO BE REPUBLISHED
© NIMI

Hydraulic system – ATA29 – Brief description

Objectives: At the end of this lesson you shall be able to
- **describe the ATA29 sections**
- **list the mains components of hydraulic system**

System chapter	Sub system section	Title and definition
29		HYDRAULIC POWER Those units and components which furnish hydraulic fluid under pressure (includes pumps, regulators, lines, valves, etc.) to a common point (manifold) for redistribution too the defined systems.
	-00	GENERAL
	-10	MAIN That portion of the system which is used to store and deliver hydraulic fluid to using systems. Includes items such as tanks, accumulators, valves, pumps, levers, switches, cables, plumbing, wiring, external connectors, etc. Does not include the supply valves to the using systems.
	-20	AUXILIARY That portion of the system which is classified as auxiliary, emergency or standby, and which is used to supplement or take the place of the main hydraulic system. Includes items such as tanks and accumulators which are separate from the main system, hand pumps, auxiliary pumps, valves, plumbing, wiring, etc.
	-30	INDICATING That portion of the system which is used to indicate the quantity, temperature and pressure of the hydraulic fluid. Includes items such as transmitters, indicators, wiring, warning systems, etc.

Description and overview

Hydraulics is a method of transmitting power through pipes and control devices, using liquid as the operating medium. For certain applications hydraulic systems are used in preference to mechanical or electrical systems for anumber of reasons, among which are ease of application of force, ability to increase the applied force as necessary,ease of routing of pipelines, etc.

Hydraulic systems in aircraft provide a means for the operation of aircraft components.

The operation of landing gear, flaps, flight control surfaces, and brakes is largely accomplished with hydraulic power systems.

To achieve the necessary redundancy and reliability, the system may consist of several subsystems. Each subsystem has a power generating device (pump), reservoir, accumulator, heat exchanger, filtering system, etc.

System operating pressure from 3,000 to4,000 psi in large aircrafts.

Basic hydraulic system

Regardless of its function and design, every hydraulic system has a minimum number of basic components in addition to a means through which the fluid is transmitted.

A basic system consists of a pump, reservoir, directional valve, shutoff valve, pressure relieve valve, selector valve, actuator, priority valve and filter.

The primary source of power on an aircraft is the engine, and the hydraulic pump is connected to the engine gearbox. A system will contain one or more hydraulic pumps depending on the type of aircraft.

The pump causes a flow of fluid at a certain pressure, through stainless steel pipes to various actuating devices.

In practice most aircraft contain multiple pumps and connections of pipes to ensure that single failures and leaks do not deplete the whole system of power.

A reservoir ensures that sufficient fluid is available under all conditions of demand.

All hydraulic systems have some form of emergency power source. In its simplest form this will be an accumulator.The purpose of the accumulator in a hydraulic system is to store a volume of fluid under pressure. There are several reasons why it is advantageous to store a volume of fluid under pressure.

Hydraulic fluid will hold in suspension tiny particles generated during normal wear of selector valves, pumps, and other system components.Because close tolerances exist within a hydraulic system, the performance and reliability of the entire system depend upon adequate filtration.

Filters may be located within the reservoir, the pressure line, the return line, or any other location where they are needed to safeguard the hydraulic system against contaminants.

NOT TO BE REPUBLISHED © NIMI

Hydraulic line marking

Fig 1

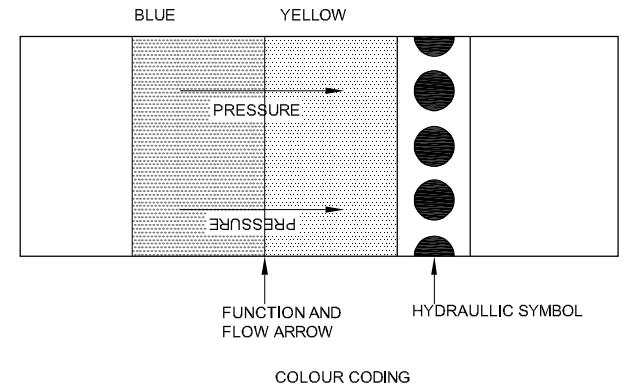

Example of hydraulic systems

Dassault Aviation Falcon 7X - Hydraulic system

Hydraulic power on Falcon 7X is supplied by:

- The primary hydraulic systems during normal flight operation
- The auxiliary hydraulic supply:
- On ground if primary hydraulic power is not available or for maintenance operations,
- In flight in case of failure of the primary hydraulic system.

The primary hydraulic power supply features three independent hydraulic systems (referred to as A, B, and C systems), each operating with hydraulic fluid at a nominal pressure of 3000 psi. It is powered by five Engine Driven Pumps (EDP).

The auxiliary hydraulic supply, which is provided by the electrical backup pump and selectorvalve, provide back-up power between 2900 psi and 1500 psi for system B as wellas power to systems A or B for ground maintenance activities.

Fig 2

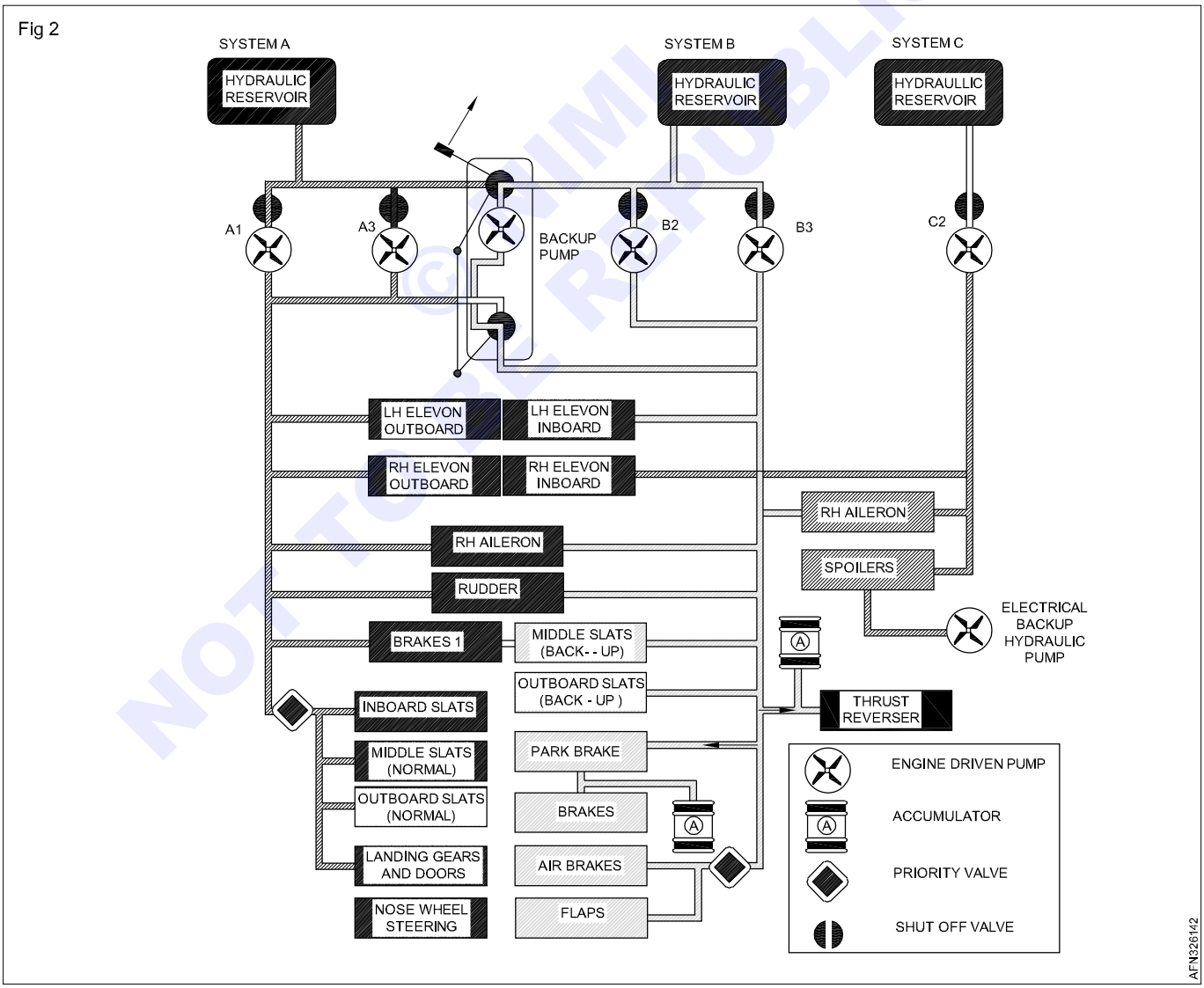

NOT TO BE REPUBLISHED ©SIMI

Example of hydraulic systems

Airbus A320 family - Hydraulic system

The Airbus A320 is equipped with three continuously operating hydraulic systems called Blue, Green and Yellow. Each system has its own hydraulic reservoir as a source of hydraulic fluid.

- The Green system (System 1) is pressurised by an Engine Driven Pump (EDP) located on No. 1 engine which may deliver 140 l/min
- The Blue system (System 2) is pressurised by an electric motor-driven pump capable of delivering 23 l/min. A Ram Air Turbine (RAT) can provide up to 78 l/min at 2175 psi in emergency conditions
- The Yellow system (System 3) is pressurised by an EDP driven by No. 2 Engine. An electric motor driven pump is provided which is capable of delivering 23 l/min for ground servicing operations. This system also has a hand pump to pressurise the system for cargo door operation when the aircraft is on the ground with electrical power unavailable

Each main system has a hydraulic accumulator to maintain system pressure in the event of transients.

Each system includes a leak measurement valve and a priority valve.

Fig 3

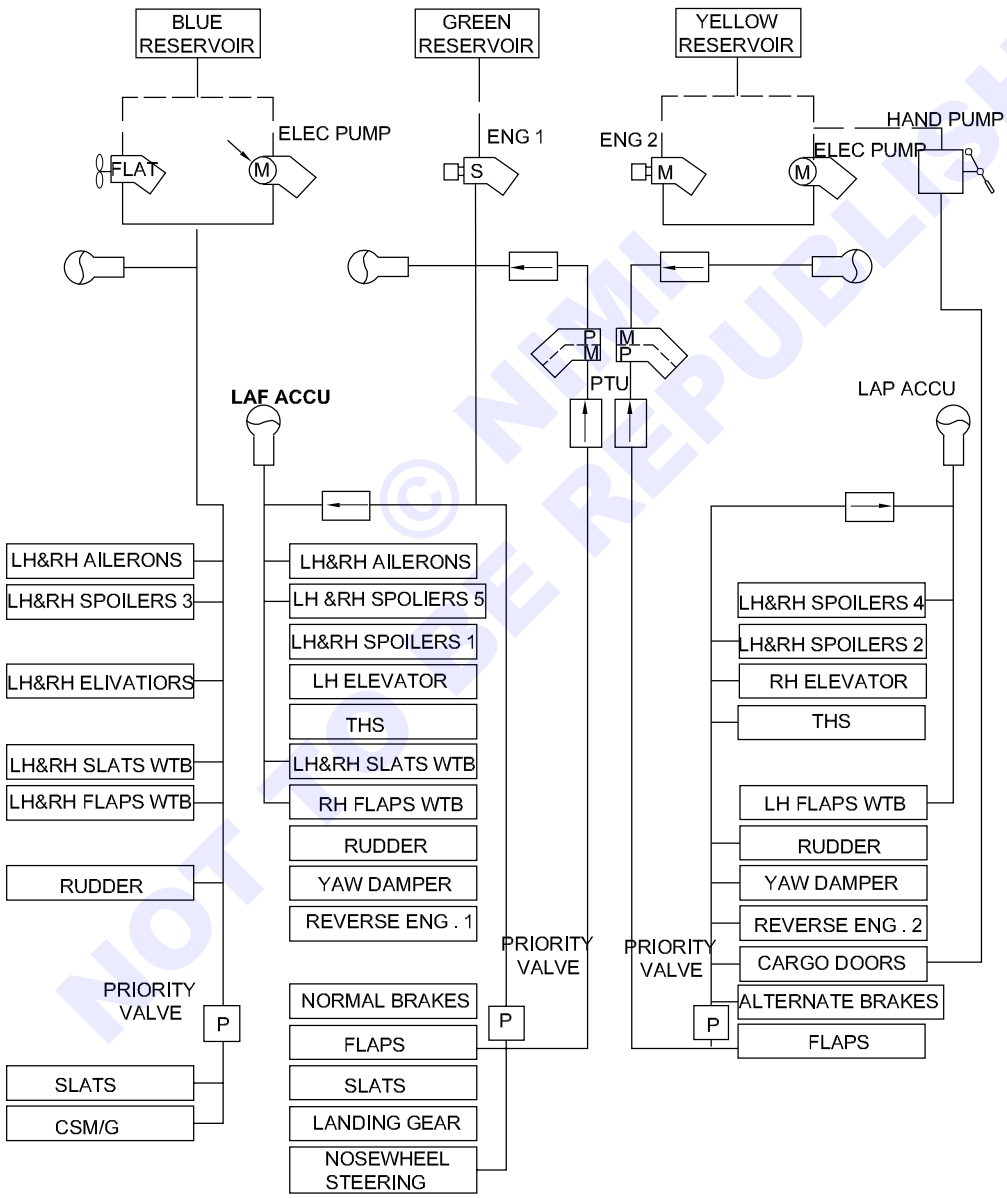

AIRBUS A320 FAMILY - HYDRAULIC SYSTEM

© NIMI NOT TO BE REPUBLISHED

Fig 4

SYMBOLS USED

M	ELECTRIC PUMP		PRESSURE ACCUMULATOR
S	ENGINE PUMP		TEMPRATURE SENSOR
RAT	RAM AIR TURBINE (RAT)	P	PRIORIJTY VALVE
	HAND PUMP	HP	HIGH PRESSURE MANIFOLD
S	ELECTRICALLY OPERATED SHUT OFF VALVE		TOW WAY RESTRICTOR
	GROUND CONNECTOR		POWER TRANSFER UNIT
	SELF SEALING COUPLING		SPRING -TYPE ACCUMLATOR
	PRESSURE RELIF VALVE		PRESSURE GAGE
	CHECK VALVE		PULSATION DAMPENER
F	HYDRAULIC SAFTEY VALVE (FUSE)	LP	LOW PRESSURE MANIFOLD
	FILTER	H	HYDRAULLIC OPERATED SELECTOR VALVE
	PRESSURE TRANSMITTER		VALVE WITH MANNUEL OPERATION
	PRESSURE SWITCH	M	HYDRAULIC MOTOR
S	SOLENOID VALVE		HYDRAULIC ACTUATOR

AFN326144

© NIMI NOT TO BE REPUBLISHED

Oxygen system - ATA35 - Brief description

Objectives: At the end of this lesson you shall be able to
- **describe the ATA35 sections**
- **list the mains type of oxygen system**

ATA Chapter/Section contents

System chapter	Sub system section	Title and definition
35		OXYGEN Those units and components which store, regulate, and deliver oxygen to the passengers and crew, including bottles, relief valves, shut-off valves, outlets, regulators, masks, walk-around bottles, etc.
	-00	GENERAL
	-10	CREW That portion of the system which furnishes oxygen to the crew.
	-20	PASSENGER That portion of the system which furnishes oxygen to the passengers.
	-30	PORTABLE That portion of the system which has an independent oxygen supply, and which can be transported about the airplane.

With increase in altitude the pressure of the atmosphere and the partial pressure of its oxygen content decreases, resulting in a deficiency of oxygen in the blood and tissues of individuals subjected to such pressures.

Civil transport aircraft cruise at altitudes where cabin pressurisation is necessary to maintain conditions inside the cabin approximately equal to a maximum altitude of 8,000 feet, regardless of the actual altitude of the aircraft. Under such conditions, oxygen is not normally needed for the comfort of the passengers and crew.

However, as a precaution, oxygen equipment is installed for use in the event of a cabin pressurisation system failure.

In addition, portable oxygen sets are also provided for therapeutic purposes, and for cabin attendants' use while moving about the passenger cabin during low cabin pressure emergencies.

Pipe indication marking

Fig 1

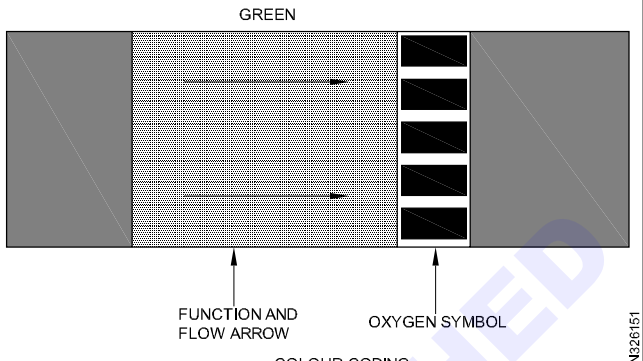

Crew oxygen overview (Fig 1 and 2)

Fig 2

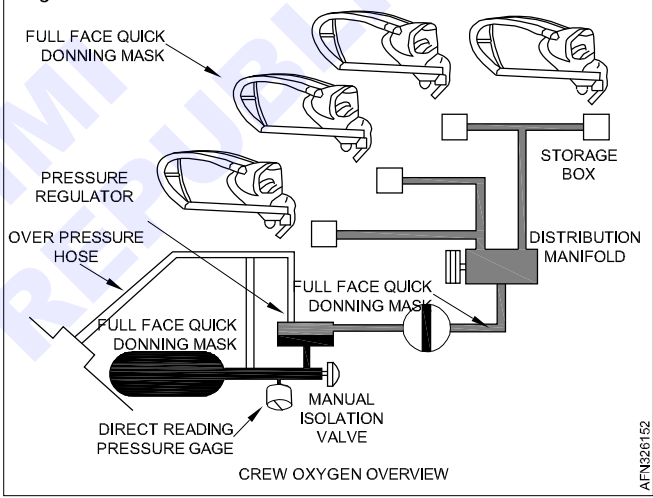

Fig 3

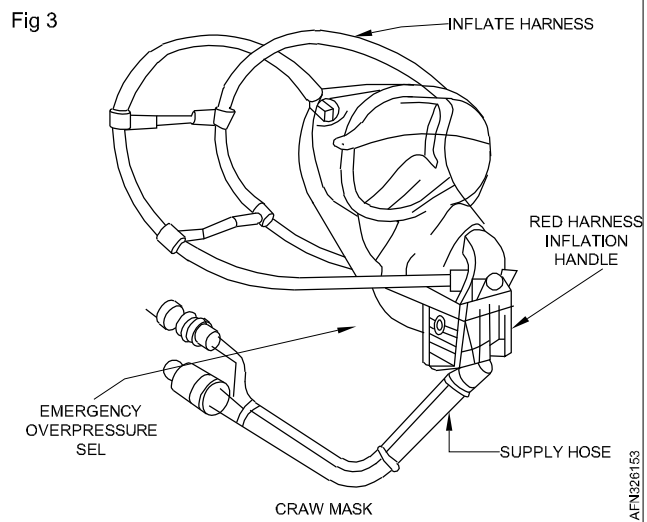

© NIMI NOT TO BE REPUBLISHED

Fig 4

Airbus A340 - passenger oxygen system

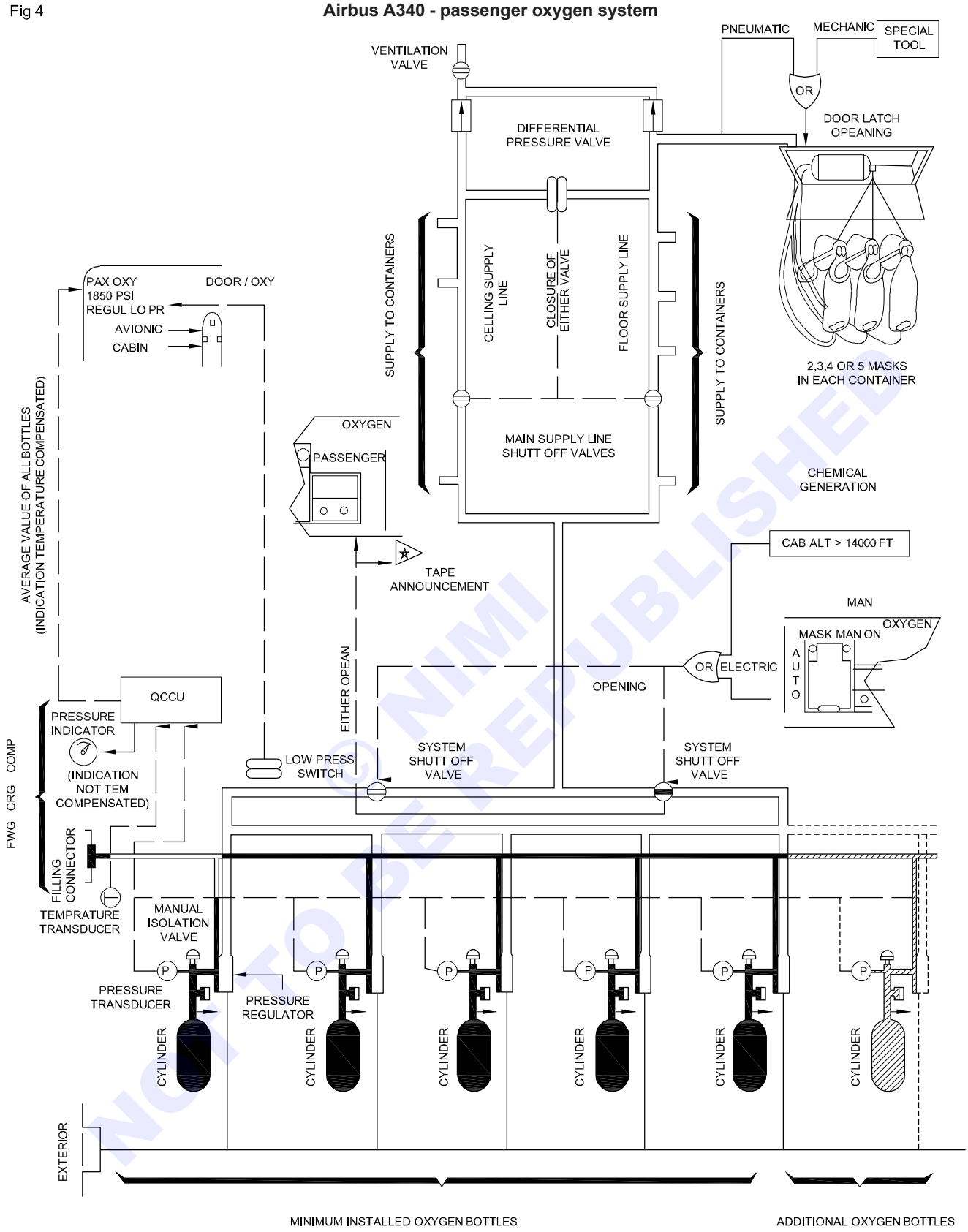

© NIMI NOT TO BE REPUBLISHED

Pipes jointing techniques

Objective: At the end of this lesson you shall be able to
- **describe the mains fittings used in pipe jointing.**

Fittings attach one piece of tubing to another or to the system units can be:

- Bead and clamp for low/med pressure and vacuum/ coolant system
- Flared fittings for all systems regardless of pressure.
- Flare less fittings for all systems regardless of pressure.
- Permanent fittings (swaged) for all systems regardless of pressure.

Flared Fittings (Fig 1)

A flared tube fitting consists of a sleeve and a nut, as shown in Figure 1. The nut fits over the sleeve and, when tightened, draws the sleeve and tubing flare tightly against a male fitting to form a seal.

Tubing used with this type of fitting must be flared before installation.

The male fitting has a cone-shaped surface with the same angle as the inside of the flare. The sleeve supports the tube so that vibration does not concentrate at the edge of the flare and distributes the shearing action over a wider area for added strength.

Fig 1

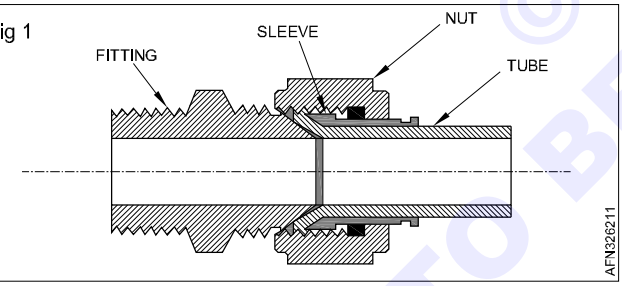

Flareless Fittings

Flareless fittings are designed primarily for high-pressure (3,000 psi) hydraulic systems that may be subjected to severe vibration or fluctuating pressure.

Using this type of fitting eliminates all tube flaring, yet provides a safe and strong, dependable tube connection.

The fitting consists of three parts: a body, a sleeve, and a nut.

The internal design of the body causes the sleeve to cut into the outside of the tube when the body and nut are joined.

Fig 2

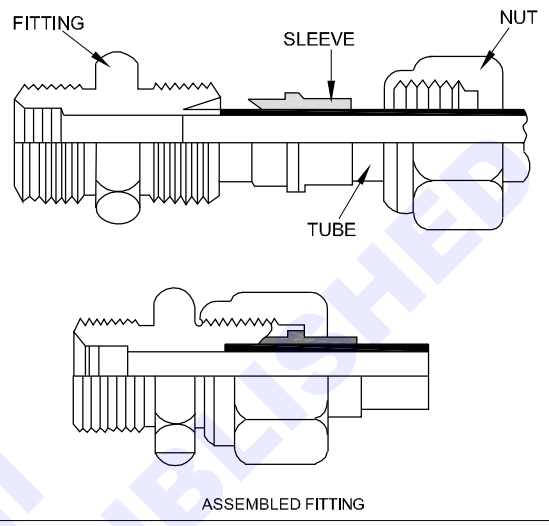

Swaged Fittings

A popular repair system for connecting and repairing hydraulic lines on transport category aircraft is the use of Perm swage™ fittings. Swaged fittings create a permanent connection that is virtually maintenance free.

Swaged fittings are used to join hydraulic lines in areas where routine disconnections are not required and are often used with titanium and corrosion resistant steel tubing. The fittings are installed with portable hydraulically powered tooling.

The movement of the ring along the fitting body results in deformation of the tube with a leak-tight joint.

Fig 3

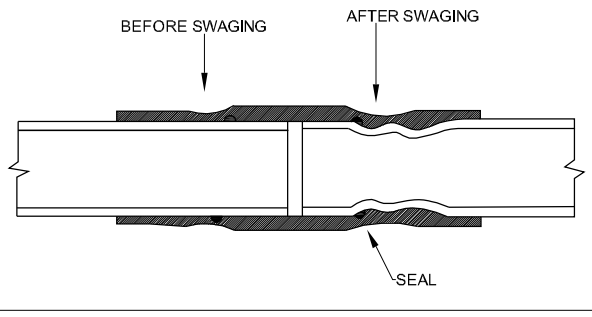

© NIMI NOT TO BE REPUBLISHED

Rigid pipes installation

Objectives: At the end of this lesson you shall be able to
- **explain the styles of clamps**
- **state how to install clamps**
- **state how to install rigid pipes.**

Clamps

Loop style without cushion (Fig 1)

Used primarily for electrical bonding or grounding and in some instances for high temperatures in excess of cushion capabilities.

AN742 / MS9025 / NASMS21322/ MS122900 through MS122939 / etc.

Fig 1

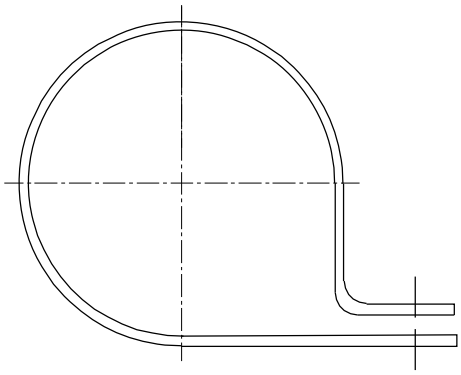

Loop style with cushion (Fig 2)

A clamp configuration for tube clamping available in a variety of metal bands and cushioning materials. For general purpose use on ground support and automotive equipment.

NAS1715 / NASMS21322 / MS21919 / etc.

Fig 2

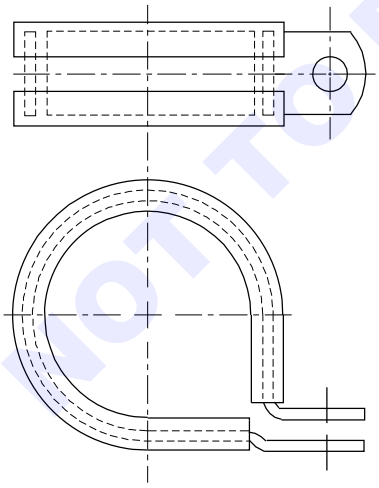

Loop style cushioned with wedge (Fig 3)

The most widely used configuration for wire bundle, cable and tube clamping.

Also available in a variety of metal bands and cushioning materials.

Wedge dimensional requirements vary according to use. Refer to MIL-C-85052 for full contour wedge providing maximum tube retention.

MS21919 / NAS1715 / etc.

Fig 3

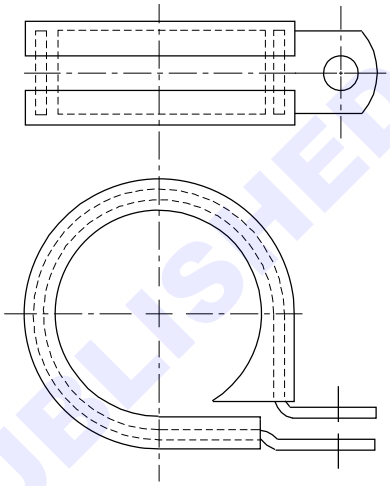

Centre mount without cushion (Fig 4)

Used for electrical bonding or grounding and in some applications where temperatures exceed cushion capabilities.

AN735 / etc.

Fig 4

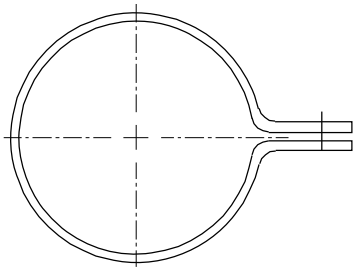

Centre mount with cushion (Fig 5)

An excellent tube clamp providing excellent retention resulting from 360-degree contact. Also, can be used for cable installations. Not preferred for wire bundles as trapping of wires is possible.

NAS1713 / etc.

© NIMI NOT TO BE REPUBLISHED

Fig 5

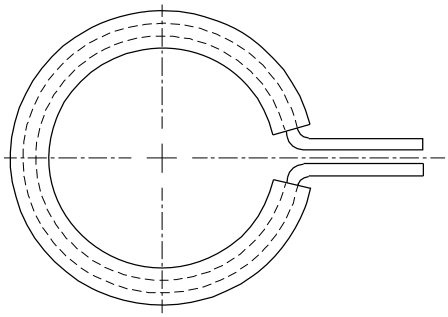

Installation of tubing (Fig 6)

Make sure that the parts you assemble are clean and free of contamination.

Make sure that the parts you assemble are not damaged. Specially, inspect the sealing surfaces (on fittings and pipe ends) and the threads of the fittings.

Fig 6

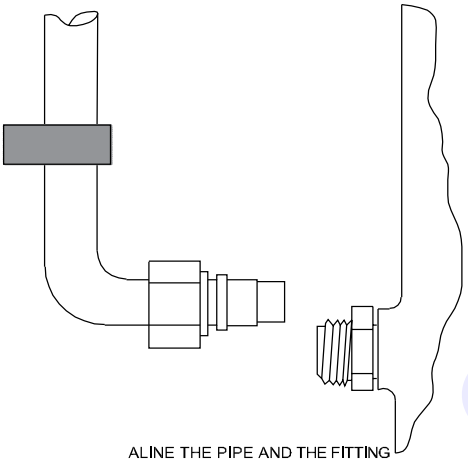

Position the pipe and make sure that:

- The pipe you install is not too short or too long
- The pipe you install can be positioned without too much force on the clamp blocks
- The pipe alignment at unions is correct.

1 Align the pipe and the fitting and insert tube end. The sleeve must be fully bottomed against the mating surface of the fitting.

Note: Tighten the sleeve nut with your hand until it bottoms against sleeve shoulder.

The nut must turn freely on the thread. This shows that the tube ends are correctly aligned.

You must connect and tighten with your hand all the ends of the pipe before you apply the tightening torque on one end.

When you install a pipe on a tee or a cross, you must connect and tighten with your hand all the connections of the tee or the cross before you apply the tightening torque on one end.

2 Attach the clamp blocks without tightening.

3 Set the torque wrench to the applicable value.

4 Position the torque wrench on the sleeve nut and the counter-torque wrench on the fitting

5 Apply a slow and continuous force on the torque wrench until you reach the set torque value.

(See Tightening chapter for details)

Align the pipe and the fitting

Protection and distance between structural part and tubing: Flexible grommets or hose shall be used at points where tubing passes through bulkheads. Unless otherwise specified, where tubing is supported to structure or other rigid members, a minimum clearance of 1/16 inch shall be maintained. In areas close to rigid structures or where relative motion of adjoining components exists, a minimum clearance of 1/4 inch shall be maintained.

Installing clamps

All system tubing shall be supported from rigid structures preferably by cushioned steel clamps or multiple tube block clamps.

System tubing support clamps shall be installed and maintained in the positions described in applicable manufacturer technical directives.

Selecting Clamps (Fig 7)

Selecting the correct size clamp is vital for a dependable tubing installation.

A loose clamp will permit abrasion and often cause clamp breakage or even result in tube or fitting failure.

The use of too small a clamp will likely result in a broken clamp and subsequent tubing or fitting failure.

Fig 7

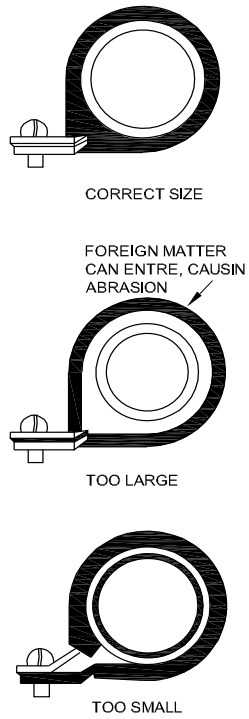

NOT TO BE REPUBLISHED © NIMI

Mounting Clamps (Fig 8)

The position of the clamp,relative to the tube, must be at 90 degrees at installation to prevent built-in preload and subsequent clamp distortion and failure.

Clamp misalignment will also cause abrasion or tearing of the cushion material, resulting in a metal-to-metal condition, anda far greater abrasion problem.

Fig 8

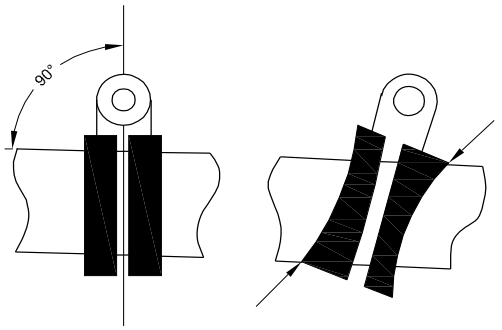

Spacing Clamps

Spacing of clamps must be determined for each and every tube installation, taking into consideration load, flexure, vibration, surges and other operational factors.

Clamping Bend Tubes (Fig 9)

Tubing should be supported to rigid structure as close to the tube bends aspossible, as this is an area of pressure build-up and surge, especially in hydraulic and fuel systems.

As tubing is no longer perfectly round after bending,check the tube for roundness, before positioning theclamp and securing it to the structure. Clamping onthe tube bend or out-of-round areas will distort the clamp, causing abrasion and subsequent clamp and tube failure.

Locate the clamp mounting, where possible,to the inside of the bend for the best structural advantage.

Fig 9

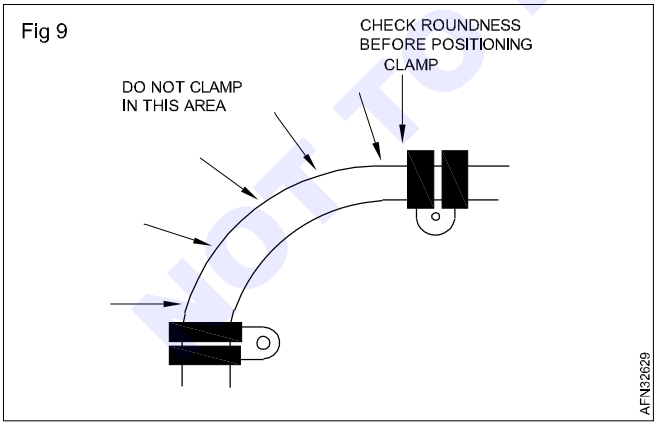

Clamping Tubes Vertically (Fig 10)

When mounting tubes to vertical structure, the static load force should oppose the mounting foot and bolt when using a single mounting point clamp.

If the tube is mounted withthe bolt below the tube, bending or distortion can and probably will result from either static load or personnel using the tubing as a hand hold.

Fig 10

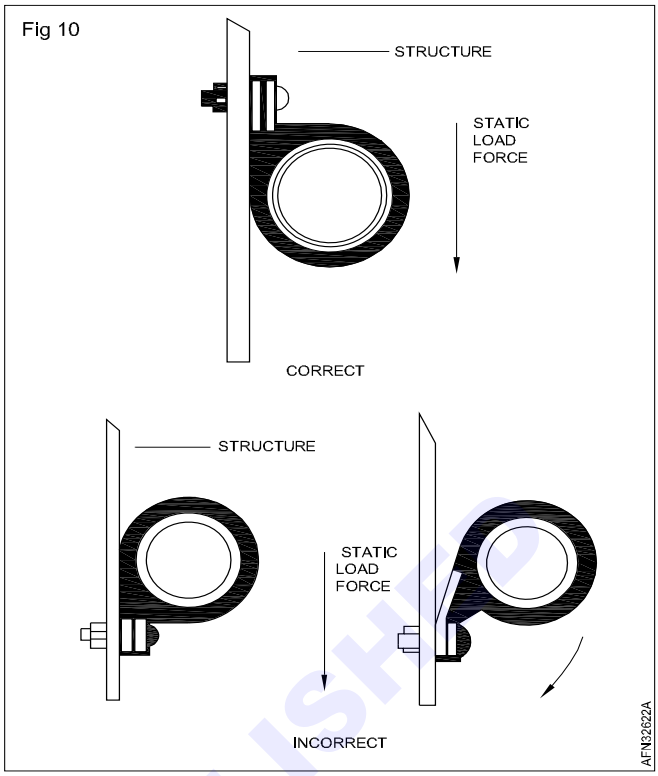

Standoffs and Brackets (Fig 11)

Standoffs and brackets are necessary for many tubing and wiring installations due to existing available structure and the line or cable separation required.

Fig 11

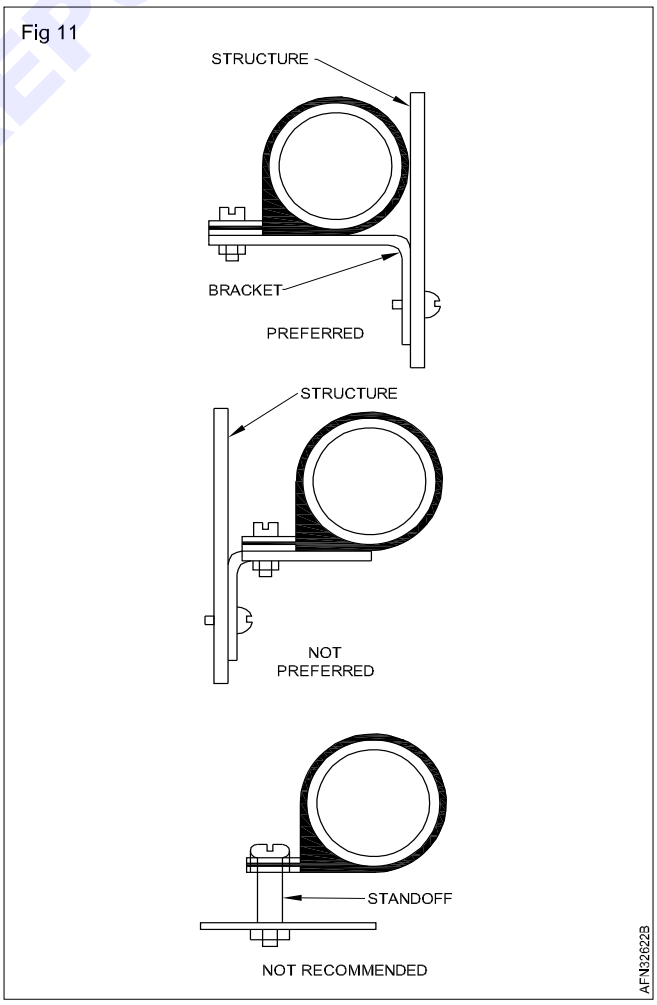

NOT TO BE REPUBLISHED © NIMI

Brackets are preferred over stand offs since they provide more support for the clamp and eliminate another piece of loose hardware, a principle cause of Foreign Object Damage (FOD).

Butterflying (Figs 12 and 13): The common practice of mounting two or more clamps with a single bolt, known as butterflying, should be kept to a minimum.

Brackets or base mounting are preferred.

Fig 12

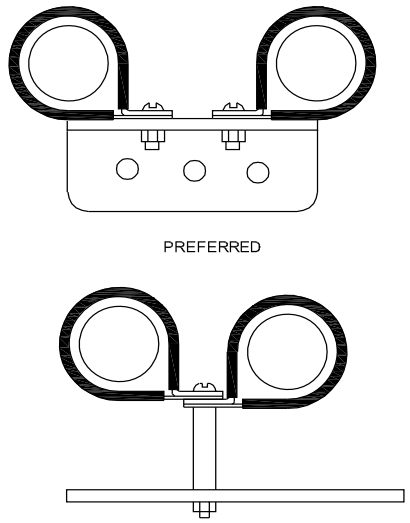

Fig 13

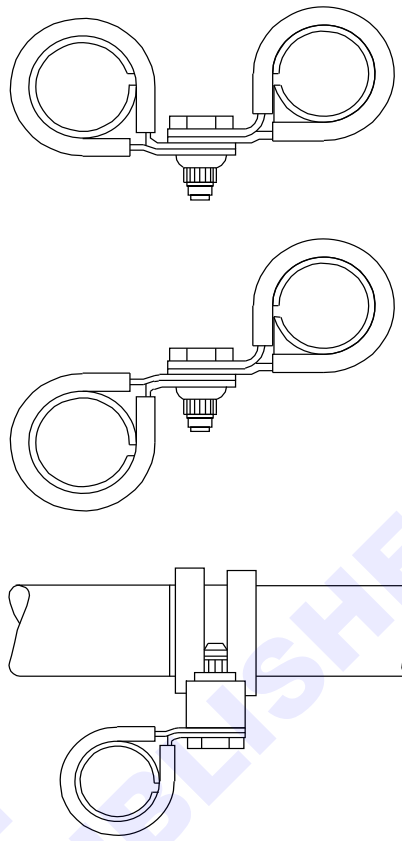

Marking of pipes

Objectives: At the end of this lesson you shall be able to
- **state the basic fluid line identification**
- **explain the main symbols and colours.**

Fluid Line Identification

Fluid lines in aircraft are often identified by markers made up of colour codes, words, and geometric symbols.

Each line shall be identified as to function and subsidiary functions when required, applicable hazard and direction of flow if applicable

Fig 1

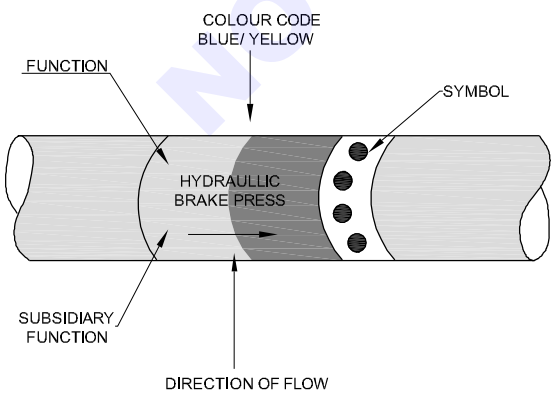

Identification of function

Function shall be identified by the use of words, colours (see application colour table), and symbols (see symbols table), except that symbols need not be used where identification is accomplished with paints, and neither colours nor symbols are required on tags or bands.

Identification of subsidiary function

If required for unique identification of a line, additional information relating to function of a line may be imprinted in words or abbreviations on the coloured portion of the tape.

Designation of hazards

Hazardous materials or conditions shall be designated in black letters on white or silvery background. Where such hazards result from working pressure only, and where the pressure is indicated in the identification, no further identification of hazard is necessary.

Under conditions warranting special care over and above that required for the identified hazard, the skull and cross-bones symbolshall be used.

© NIMI NOT TO BE REPUBLISHED

Designation of direction of flow

When required, a direction of flow arrow shall be used to indicate the direction in which the content of the line is flowing.

A two-headed arrow will be used to indicate reversible flow.

Designation of pressure

When necessary, the pressure shall be shown in pounds (force) per square inch, i.e., 150 PSI.

Lettering shall be black on a white or metallic (silvery or chrome) background.

Identification media

Tape which completely encircles the line, shall be used to identify function of all lines, except lines exposed to excessive heat, lines in engine compartments and fuel tanks or fuel cells where there is a possibility of the tape being drawn into the engine intake or fuel screen.

Tapes used to identify function shall be colour coded, geometric symbols and lettering.

Where the configuration does not permit application of tape, alternate identification methods such as brands or tags may be used.

Application of colours

Colour coding shall be based upon function as indicated below. Where more than one colour is required to identify a single function the order of colours is from left to right, and the coloured area shall be composed of vertical stripes, of equal width, of the required colours.

Functions and associated symbols table

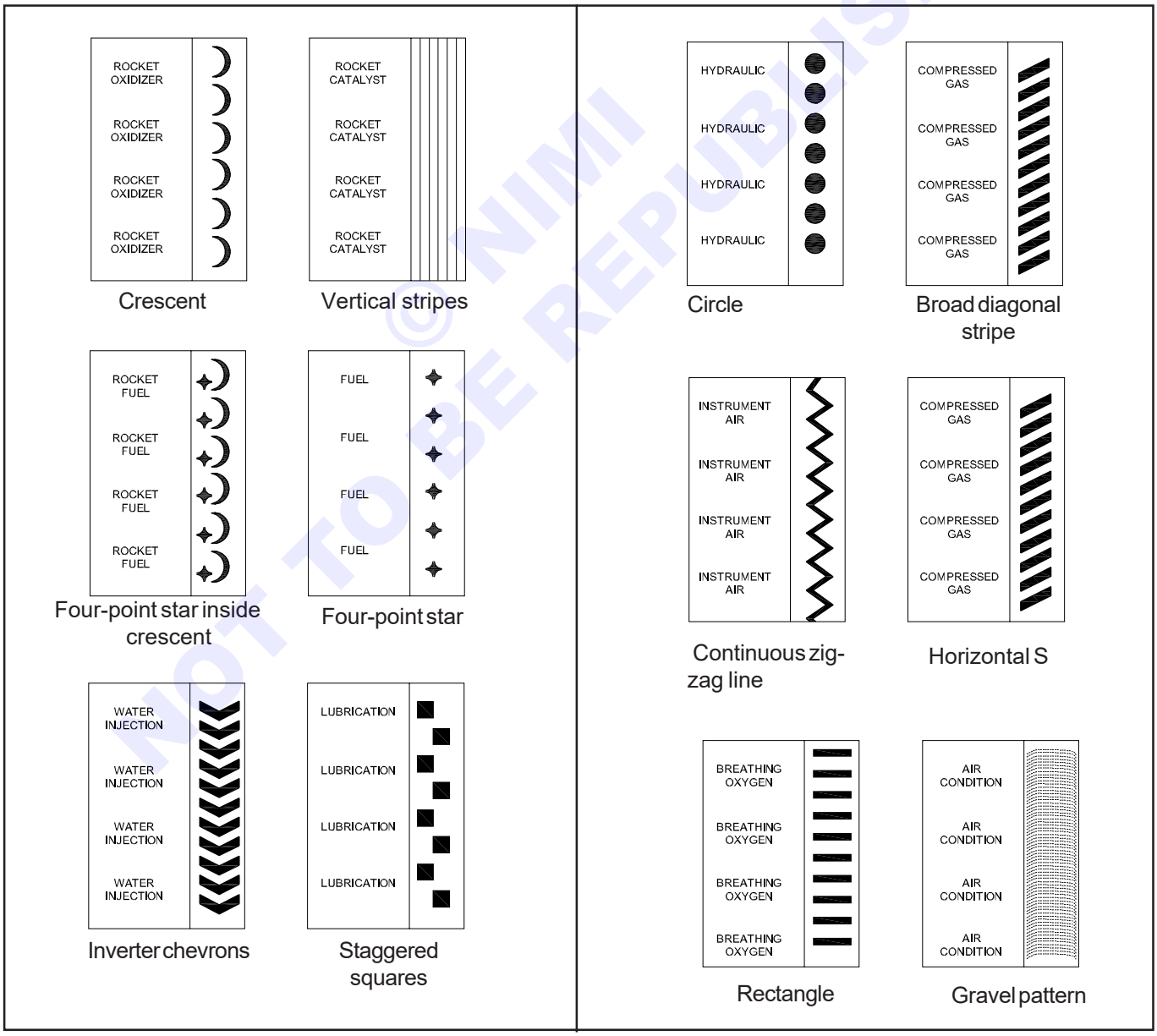

© NIMI NOT TO BE REPUBLISHED

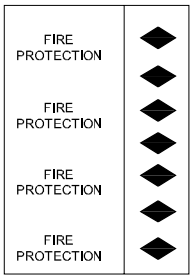

Horizontal diamond

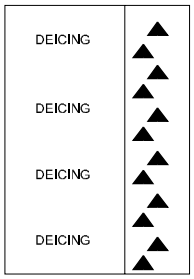

Staggered triangles

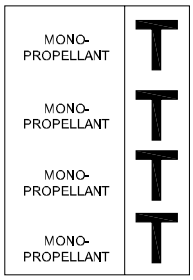

Block T

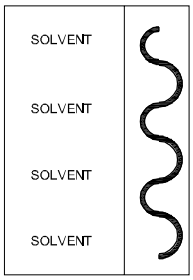

Vertical navy line

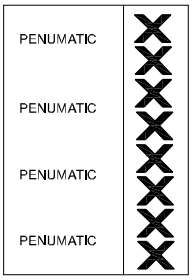

Continuous X-form lattice

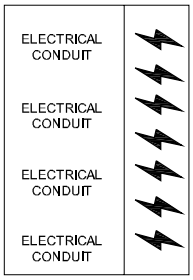

Flash of lighting

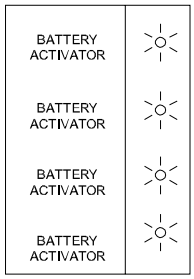

Sparkling

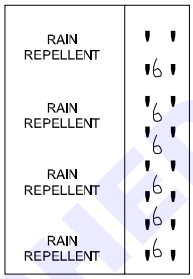

Rain drops

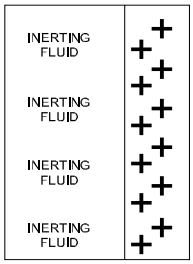

Staggered pipe cross

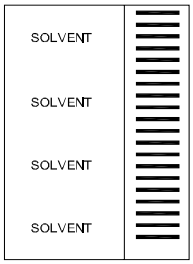

Horizontal stripes

Functions and associated colours table

Function	Colour
Fuel	Red
Rocket Oxidizer	Green, Grey
Rocket	Fuel Red, Grey
Water Injection	Red, Grey, Red
Lubrication	Yellow
Hydraulic	Blue, Yellow
Solvent	Blue, Brown
Pneumatic	Air Orange, Blue
Instrument Air	Orange, Grey
Coolant	Blue
Breathing Oxygen	Green

Air Conditioning	Brown, Grey
Monopropellant	Yellow, Orange
Battery Activator	Yellow, Grey
Rain Repellents	Blue, Grey
Vacuum	Grey, Orange, Grey
Fire Protection	Brown
De-Icing	Grey
Rocket Catalyst	Yellow, Green
Compressed Gas	Orange
Electrical Conduit	Brown, Orange
Inerting Fluid	Orange, Green

© NIMI NOT TO BE REPUBLISHED

Pipes torque wrenching

Objectives: At the end of this lesson you shall be able to
- **state the torque wrenching rules**
- **explain how to torque wrench tightening the pipes**

Tightening capacities of manual torque tools (as per standard ISO 6789) - (Fig 1)

The torque value to be applied shall mandatorily be included in upper 80% of the scale (from 20 to 100% maximum torque).

In practice, recommended use will be 30 to 80% of the maximum torque (good tightening sensation and moderate force applied).

Example: wrench with maximum capacity of 100Nm --> the usable range is 20 to 100 Nm and the recommended range is 30 to 80Nm.

Fig 1

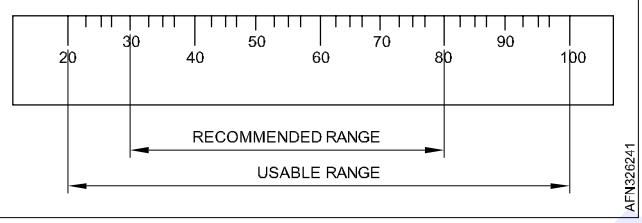

How to hold manual torque tools

As the way in which the wrench or nut runner is held directly affects the torque obtained, proceed as follows:

1 Position the wrench perpendicular to the axis of the fastener.

2 Place your hand on the handle and pull along the axis.

3 Movement shall be gradual and perpendicular to the wrench.

4 Stop movement when the wrench releases (or on signal).

Torque wrenches shall not be used for untightening, as this would degrade the release system.

Double tightening torque

The double tightening torque is not applicable for the installation of plug-in fittings installed on manifold or equipment.

If one or more of the parts you assemble are new, you must do the double torque procedure:

- Torque the nut to the correct value
- Loosen the nut by one turn
- Torque the nut again to the correct value.

Use of wrench adapter (Fig 2)

When you use a wrench adapter, you must adjust the torque value. Use the formula below to adjust the torque value.

Fig 2

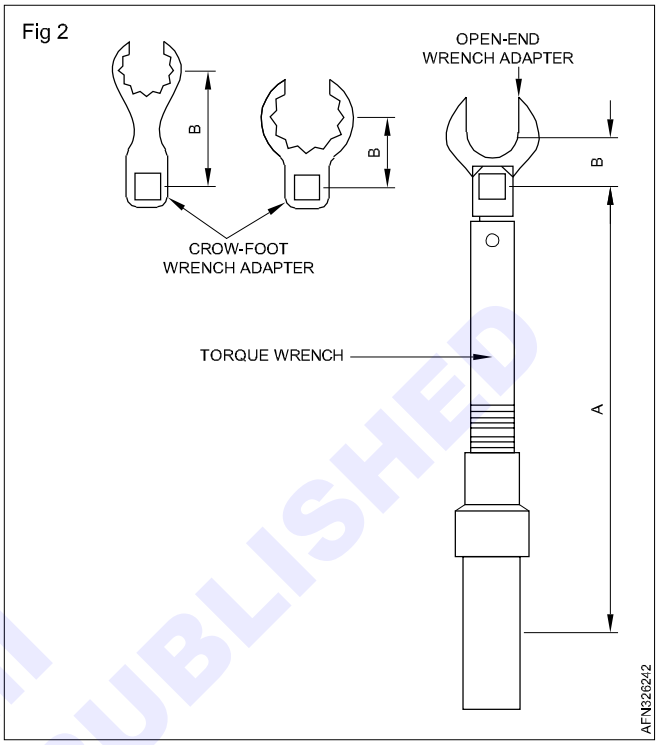

T : specified torque value

T2 : new torque value to be set on the torque wrench

Formula:

$T_2 = (T \times A) / (A + B)$

Examples

Union swaged / Sleeve nut (Fig 3)

Fig 3

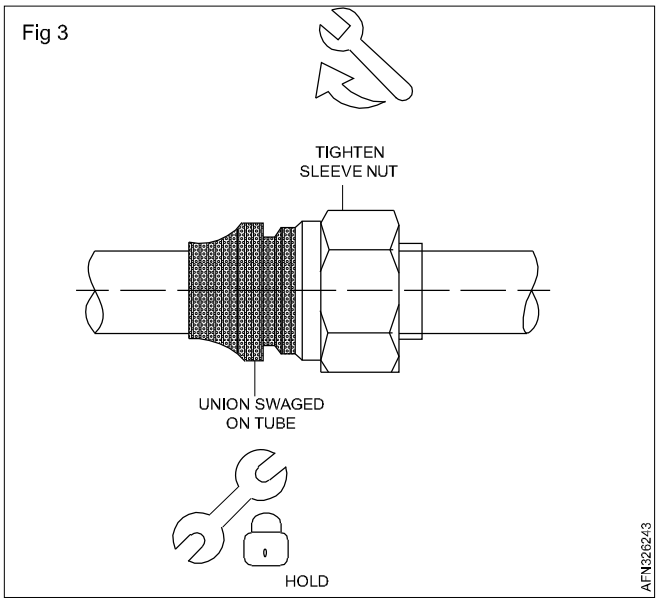

NOT TO BE REPUBLISHED © NIMI

Union swaged / Sleeve nut (Fig 4)

Fig 4

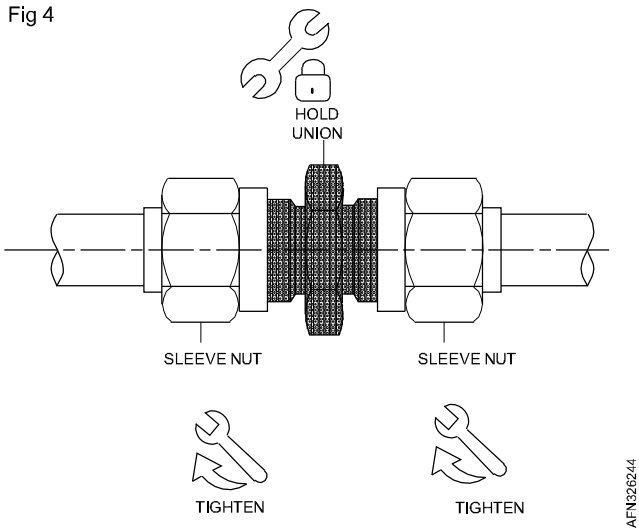

Plug-in union / Sleeve nut (Fig 5)

Fig 5

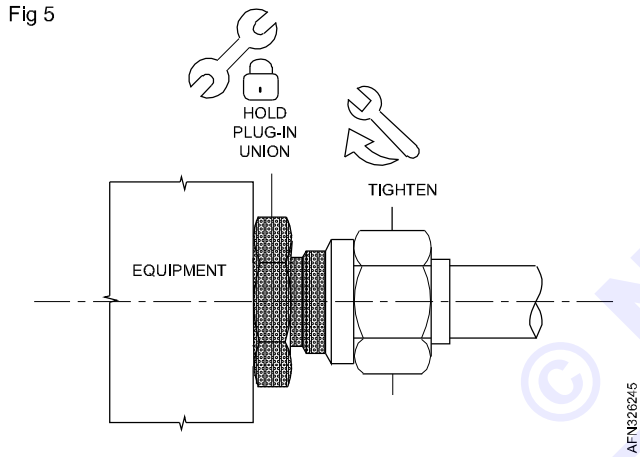

Swivel union / Sleeve nut (Fig 6)

Marking of tightening unions (Fig 7)

After you tighten a union on a hydraulic or crew oxygen system, you must identify it with a red painted line:

- This identifies a tightened union
- This shows possible loosening of the union.

Make a mark on the union with one 2 mm to 4 mm wide line.

Fig 6

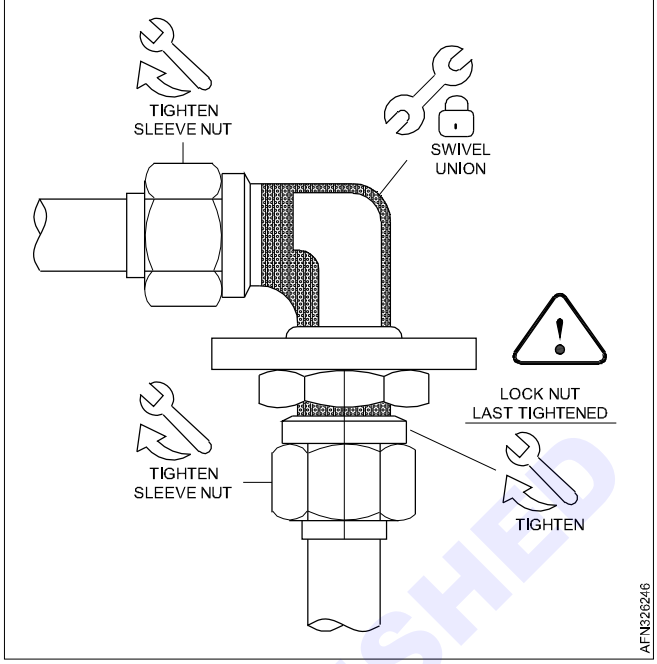

Fig 7

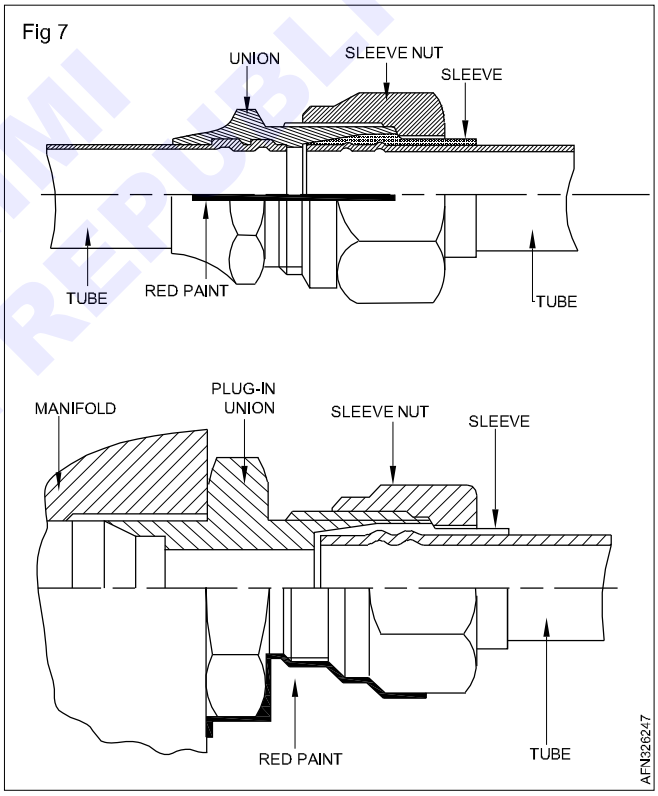

© NIMI
NOT TO BE REPUBLISHED

Pipes – Bounding and grounding

Objective: At the end of this lesson you shall be able to
- **state the basic techniques to bond pipes.**

Bonding pipes

Remove all the oil and grease contamination with solvent.

Protect the area around the area to be treated to keep to a limit the effects of the abrasive.

Remove the protective coating (Alodine, paint, etc.) from the contact zone with abrasive paper glass type 1 or grade 200 emery cloth.

The cleaned areas must be such that after assembly they give a zone between 1 mm and 4 mm around the contact faces.

If you cannot make the connection in less than 1/4 hour apply Vaseline.

Examples:

Bonding of two pipes with clamps and the bonding straps. (Fig 1)

Fig 1

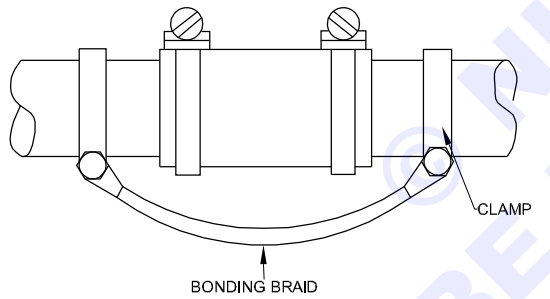

The clamps are in the same material as the pipes.

Bonding of pipe with clamps and the bonding straps. (Fig 2)

Fig 2

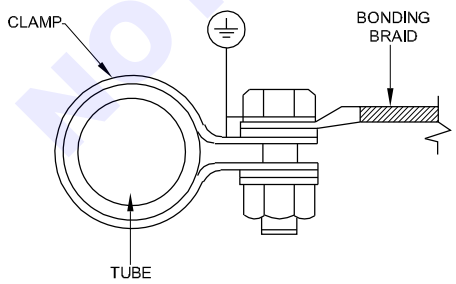

The clamps are in the same material as the pipes.

Bonding with clamp blocks. (Fig 3)

Fig 3

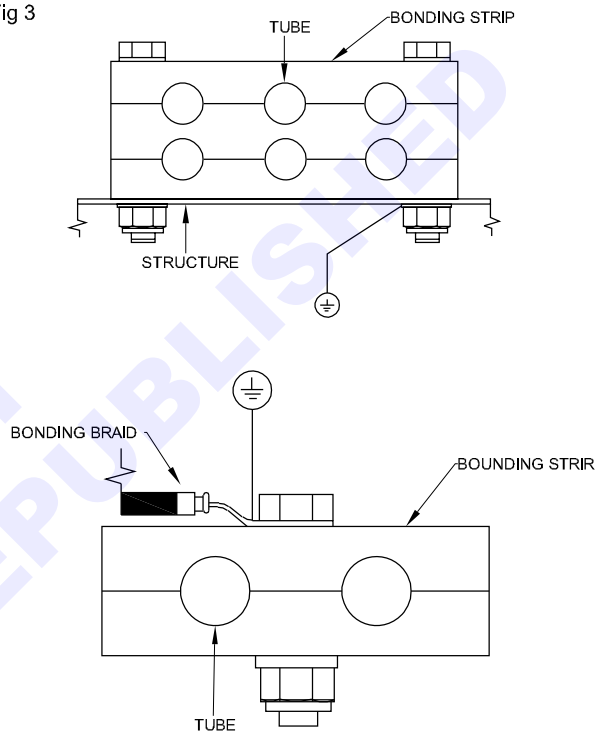

© NIMI NOT TO BE REPUBLISHED

Different flexible hose joining techniques

Objectives: At the end of this lesson you shall be able to
- **list the type of hoses.**
- **describe the constitution of hoses.**

Flexible hose is used in aircraft fluid systems to connect moving parts with stationary parts in locations subject to vibration or where a great amount of flexibility is needed.

It can also serve as a connect or in metal tubing systems.

Low, Medium, and High-Pressure Hoses

- Low pressure - below 250 psi. Fabric braid reinforcement.
- Medium pressure - up to 3,000 psi. One wire braid reinforcement. Smaller sizes carry up to 3,000 psi. Larger sizes carry pressure up to 1,500 psi.
- High-pressure - all sizes up to 3,000 psi operating pressures.

Hose description (Fig 1)

Rubber hoses consists of three basic parts:

- Inner Tube
- Reinforcement
- Cover

Fig 1

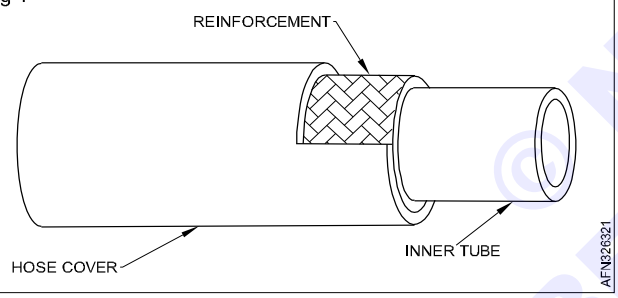

Hose assembly hardware

Materials used in the construction of fittings vary according to the application. Materials include aluminum, carbon steel, and corrosion-resistant steel.

Two methods or styles are used to secure the hose fitting on to the hose.

They are the reusable and swage or crimp style.

Reusable Style

The preferred reusable style has modified internal threads in the socket to grip the hose properly. The fitting can be disassembled from a hose assembly and reused on another hose, provided it passes an inspection for defects. Reusable style fittings are authorized replacement fittings for replacement hose assemblies.

Swage or Crimp Style

Some hose assembly manufacturers use a swage or crimp style. This style requires the socket to be permanently deformed by a hydraulic-powered machine. The deformed socket and related hardware are to be scrapped.

Low-pressure reusable rubber (Fig 2)

The low-pressure hose fitting is a compression type fitting constating of three pieces:

- Socket
- Nipple
- Nut

Fig 2

Medium-pressure reusable rubber three pieces (Fig 3)

The basic medium-pressure hose fitting is a compression type fitting constating of three pieces:

- Socket
- Nipple
- Nut

The socket are in aluminium.

Fig 3

Medium-pressure reusable rubber two pieces (Fig 4)

The two pieces are:

- Socket
- Nipple

The fitting work on a lip seal principle rather than the compression principle. The nipple spur cuts a lip in the inner tube, raising a flap which acts as a positive lip type seal.

NIMI NOT TO BE REPUBLISHED ©

Fig 4

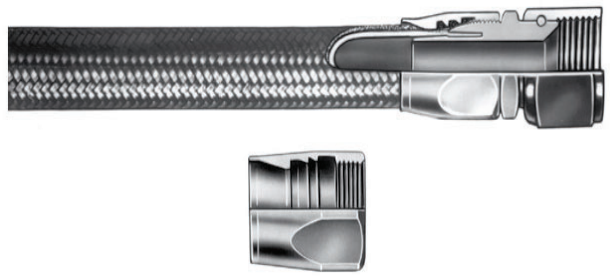

Medium-pressure compression crimp hose fitting (Fig 5)

Fig 5

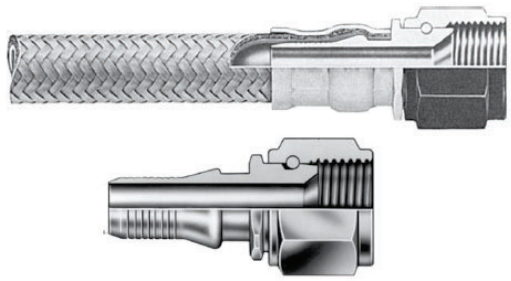

The compression crimp fitting for medium pressure hose fitting consists of two part:

- Nipple assembly
- Sleeve

Hose fittings

Hose fittings are assemblies of separate parts.

These parts are the nipple, the socket, the swivel nut or flange, and the sleeve. The nipple is the part that fits the inside diameter of the hose.

Nipples have three configurations for the hose-to-tube or component surface-sealing portion. They are the flared, flare less, and flanged configurations,

The socket fits over the outside diameter of the hose and secures one end of the nipple to the hose. The swivel nut or flange secures the other end of the nipple to the mating connection in the fluid system.

Flared or flareless fittings and nuts are color-coded to show materials or material finishes.

Flexible hose installation

Objectives: At the end of this lesson you shall be able to
- **list the fittings used.**
- **explain the rules for flexible hose installation.**

Hose Fittings

Flexible hose may be equipped with either swaged fittings or detachable fittings, or they may be used with beads and hose clamps.

Hoses equipped with swaged fittings are ordered by correct length from the manufacturer and ordinarily cannot be assembled by the mechanic. They are swaged and tested at the factory and are equipped with standard fittings.

The detachable fittings used on flexible hoses may be detached and reused if they are not damaged; otherwise, new fittings must be used.

Installation of Flexible Hose Assemblies

Twisting (Fig 1)

Hoses must be installed without twisting to avoid possible rupture of the hose or loosening of the attaching nuts. Use of swivel connections at one or both ends will relieve twist stresses. Twisting of the hose can be determined from the identification stripe running along its length. This stripe should not spiral around the hose.

Slack

Hose assemblies must not be installed in a manner that will cause a mechanical load on the hose.

Fig 1

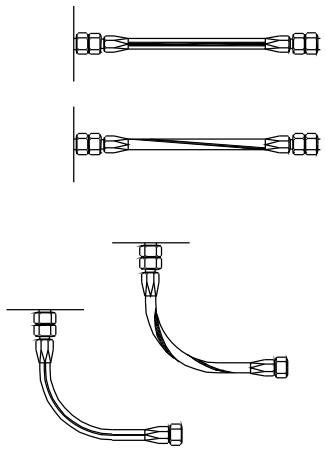

When installing flexible hose, provide slack or bend in the hose line from 5 to 8 percent of its total length to provide for changes in length that will occur when pressure is applied. Flexible hose contracts in length and expands in diameter when pressurized. Protectall flexible hoses from excessive temperatures, eitherby locating the lines so they will not be affected or by installing shrouds around them.

© NIMI NOT TO BE REPUBLISHED

Flex

When hose assemblies are subject to considerable vibration or flexing, sufficient slack must be left between rigid fittings. Install the hose so that flexure does not occur at the end fittings. The hose must remain straight for at least two hose diameters from the end fittings. Avoid clamp locations that will restrict or prevent hose flexure.

Bending (Fig 2)

To avoid sharp bends in the hose assembly,use elbow fittings, hose with elbow-type end fittings,or the appropriate bend radii. Bends that are too sharp will reduce the bursting pressure of flexible hose considerably below its rated value.

Fig 2

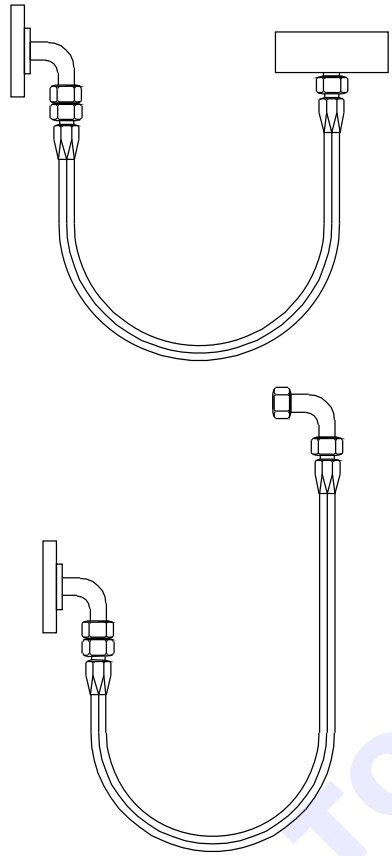

Clearance

The hose assembly must clear all other lines, equipment, and adjacent structure under every operating condition.

Flexible hose should be installed so that it will be subject to a minimum of flexing during operation.

Although hose must be supported at least every 24inches, closer supports are desirable. Flexible hose must never be stretched tightly between two fittings.

If clamps do not seal at specified tightening, examine hose connections and replace parts as necessary. Theabove is for initial installation and should not be used for loose clamps.

Hose Clamps

To ensure proper sealing of hose connections and to prevent breaking hose clamps or damaging the hose,follow the hose clamp tightening instructions carefully.

When available, use the hose clamp torque-limiting wrench.

Support clamps are used to secure the various lines to the airframe or power plant assemblies. Several types of support clamps are used for this purpose. The most commonly used clamps are the rubber-cushioned and plain. The rubber-cushioned clamp is used to secure lines subject to vibration; the cushioning prevents chafing of the tubing. The plain clamp is used to secure lines in are as not subject to vibration.

Use bonded clamps to secure metal hydraulic, fuel,or oil lines in place. Unbonded clamps should be used only for securing wiring.

Remove any paint or anodizing from the portion of the tube at the bonding clamp location.

Make certain that clamps are of the correct size.

Clamps or supporting clips smaller than the outside diameter of the hose may restrict the flow of fluid through the hose.

Do not bend or twist the hose.

Allow enough slack in the hose line to provide for changes in length when pressure is applied.

The hose will change in length from + 2% to - 4%.

Metal end fittings cannot be considered as part of the flexible portion of the assembly.

The use of elbows and adapters will ensure easier installation and, in many installations, will remove the strain from the hose line and greatly increase service life.

At all times keep the minimum bend radii of the hose as large as possible to avoid tube collapsing.

© NIMI NOT TO BE REPUBLISHED

Fire detection system - Bi-metallic strips and Graviner

Objectives: At the end of this lesson you shall be able to
- **explain the use of fire detection system**
- **explain how to work the bi-metallic strip detector and Graviner type.**

Aircraft are equipped with fire detection systems installed:

- On propulsion engines
- On reactors and spindles
- On auxiliary groups
- In the cargo compartments
- In landing gear compartments
- In the lavatories
- In defrost and air conditioning systems

Fire detection systems are usually installed in bays where the main and auxiliary power-plants are located. The intention is to monitor the temperature of the bays and to warn the crew when a predetermined temperature has been exceeded.

The system consists of a temperature measuring mechanism, either discrete or continuous, a control unit and a connection to the aircraft warning displays.

Bi-metallic strips detectors (Fig 1)

Discrete temperature sensors usually take the form of bi-metallic strips constructed so that a contact is made up to a certain temperature, when the strips part. A number of sensors are placed at strategic locations in the engine compartment, and wired to cause the contacts to open, then the control unit detects the change in resistance of the series wiring and causes a warning to illuminate in the cockpit.

Fig 1

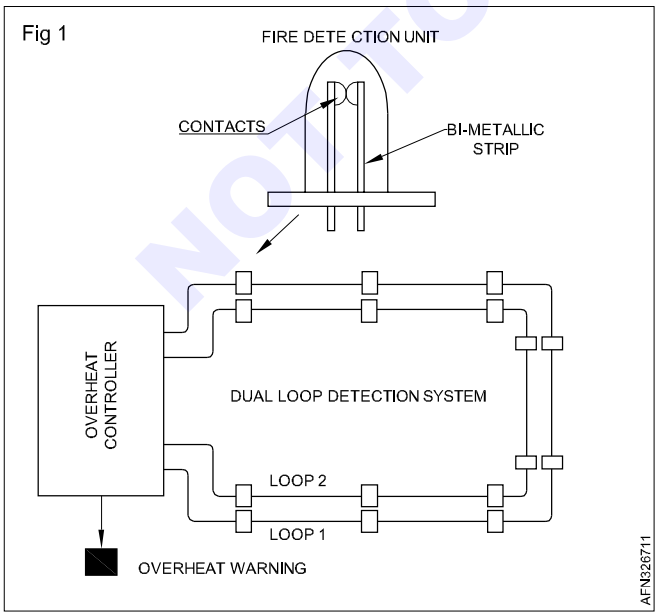

Fire detection GRAVINER type (Fig 2)

The sensing element is identical to that of the other fire detection systems. However, it is supplied with alternating current and is based on a capacitive effect in principle.

It can be compared to a cylindrical capacitor (C) of capacitance; whose dielectric is the thermos sensitive material.

T and A also form a resistance R.

The detector behaves as a parallel associated R/C cell.

This material has a negative temperature coefficient of resistance.

The resistance measured between the centre wire and the outer sheath decreases with temperature and is accompanied by a corresponding increase in capacitance.

The resistance and capacitance of a loop is monitored continuously by a control unit.

The control unit will provide a warning signal when the resistance reaches a predetermined value, as long as the capacitance is sufficiently high. Monitoring both parameters in this way reduces the potential for false recognition of fires resulting from damage or moisture contamination of the element.

Fig 2

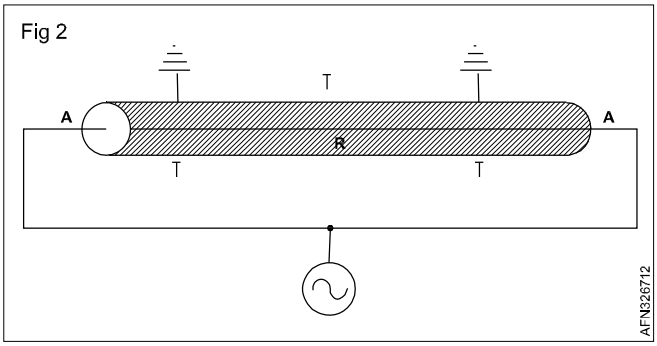

The Graviner fire wire sensing element is a slim stainless-steel tube with a centrally located coaxial wire surrounded by a temperature-sensitive, semi conductive material.

NOT TO BE REPUBLISHED © NIMI

Locking techniques

Objective: At the end of this lesson you shall be able to
- **describe the different locking techniques.**

The problems associated with threaded devices are the effects of vibration on their security.

In addition to using methods which increase the friction between threads, there are several other ways in which the integrity of a threaded joint can be assured.

Circlips and locking rings (Fig 1)

Circlips and locking rings are manufactured from spring sheet metal or spring steel wire. They may also be specially designed for a particular purpose.

Hardened and tempered to give either and 'inward' or 'outward' spring, they can be used for locking several parts together, locating components within bores or for locating components onto shafts.

Fig 1

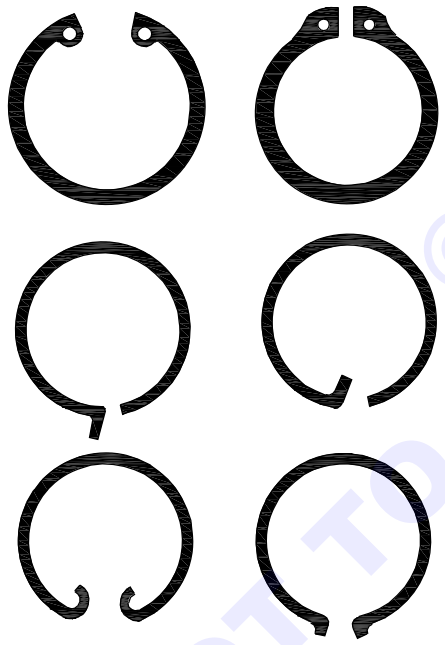

CIRCLIPS AND LOCKING WIRE

Spring sheet circlips have holes in the ends to allow circlips pliers to be inserted, enabling the circlip to be removed or installed as required.

Spring wire rings usually have one bent end that is inserted into a radial hole, drilled through the component, which matches an inner or outer ring.

All circlips are subject to some damage at times and it will usually be a requirement, after they have been removed, to inspect them thoroughly.

It is usual to discard the wire type circlips whenever they are removed.

Locking by adhesives

Applying adhesives (Araldite, etc.) may be used to lock many small components, particularly those in instruments, valves, switches etc.

Adhesive is applied to the outside of the nut face and the protruding screw thread, or to the component and screw head, after tightening, and prevents movement between relevant parts.

It is good practice, when using Araldite, to mix a separate sample under similar conditions, to check that it hardens within the specified time period.

Locking by Loctite™

Loctite is the trade name for a liquid sealant, used to lock metal threads. It is an approved, proprietary material, which hardens in the screw threads after assembly.

Loctite is supplied in various grades to give a predetermined locking strength in a variety of applications from stud locking to retaining bearing housings.

When using Loctite, it is advisable to degrease the parts to achieve maximum strength.

Shake-proof washers (Fig 2)

Flat washers of this type are manufactured from steel and are used in place of spring washers. In some circumstances conical shake-proof washers are used for locking countersunk screws.

Either the internal or the external diameters can be serrated, the serration being designed to bite into the component and nut to prevent rotation.

All shake-proof washers should be used only once.

Fig 2

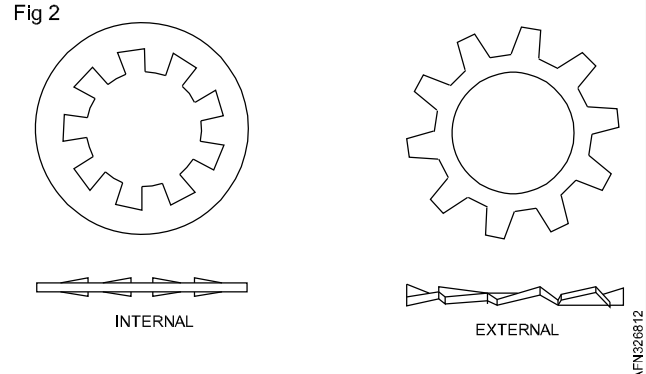

© NIMI NOT TO BE REPUBLISHED

Shake-proof washers - Tooth lock washer

Spring washers (Fig 3)

These washers are available in a variety of forms.

In some instances, spring washers are assembled with plain facing washers between the spring washer and the component to prevent damage to the surface finish when the spring washer is compressed although. With steel assemblies, the plain washer is usually omitted.

Fig 3

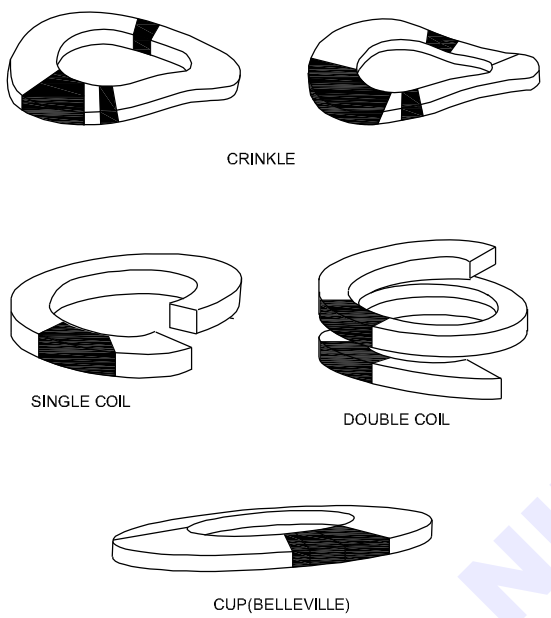

Types of spring washers include:

- Coil Washers/Split lock washer: Manufactured from rectangular-sectioned steel sheet and formed into a portion of a helix, the single and double coil are the most common types of spring washer to be found on aircraft components.
- Crinkle Washers: Crinkle washers are usually manufactured from either copper alloy or corrosion-resistant steel. They are often used in lightly loaded applications such as instruments and electrical installations.
- Cup (Belleville) Washers: Cup washers are manufactured from spring steel and are dished to form a spring of high rating. The flattening of the washer, during tightening, exerts an axial load to the nut, which will resist any tendency of the nut to lose torque.

Tab washers (Fig 4)

Tab washers are normally used on plain nuts. These washers are manufactured from thin metallic sheet material and have two or more tabs projecting from the external diameter.

When the washer is installed, one tab is bent against the component or inserted into a hole provided, whilst a second tab is bent against the flat, or flats, of the nut, after it has been torqued down correctly. The tab washers should be used only once.

Fig 4

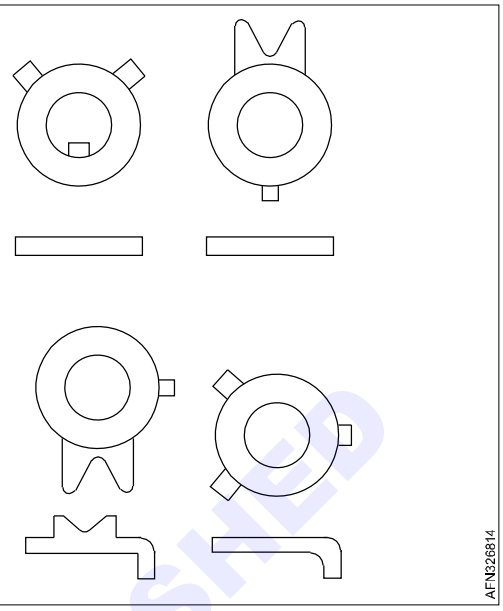

Cotter (split) pins (Fig 5)

Cotter pins are used to secure such items as bolts, screws, pins, and shafts.

These pins are usually manufactured from carbon steel or from corrosion-resistant steel. Their purpose is to lock slotted and castellated nuts as well as for securing clevis pins. The pins are measured by diameter and length.

The nuts are locked onto their bolts by passing the pin through the hole in the bolt and the nut castellation. The legs of the pin are spread in one of two methods.

Whilst either of these methods will secure the nut to the bolt, different airworthiness authorities prefer one method to the other. Ensure the prong, bent over the bolt, is seated firmly against the bolt shank, and does not exceed bolt diameter.

Also, when the prong is bent over the nut, ensure the bent prong is down and firmly flat against the nut and does not contact the surface of the washer.

It must be noted that the nuts must never be over-to rqued to get the holes into line. The nut must either be backed-off, if this is permitted, or washers added under the nut. Cotter pins should not be reused on aircraft.

Fig 5

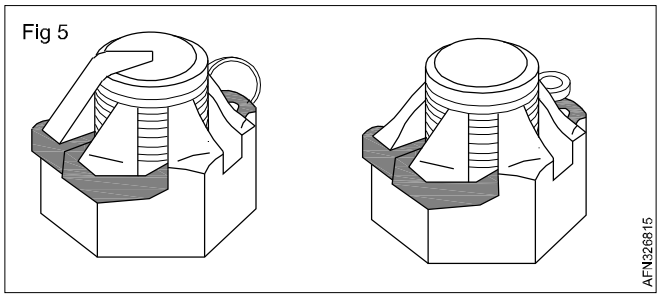

© NIMI NOT TO BE REPUBLISHED

Locking wire

Wire-locking is the commonest form of locking in use throughout the aircraft industry.

The wire is usually made of corrosion-resistant steel or heat-resistant nickel alloy. The wire is normally classified by its diameter in increments of Standard Wire Gauge (SWG) or American Wire Gauge (AWG).

Components designed to be wire-locked have holes in the appropriate positions to enable the lock wire to pass through.

When installing the wire, is positioned so that the item being locked will be restrained from turning in a loosening direction.

Do not use stainless steel or carbon steel safety wire to secure emergency mechanisms such as switch handles, guards covering handles used on exits, fire extinguishers, emergency gear releases, or another emergency equipment.

These devices require copper or brass safety wire.

There are two methods of safety wiring:

- Double-twist method that is most commonly used.
- Single-wire method used on screws, bolts, and/or nuts in a closely spaced. The single- wire method may also be used on parts in electrical systems and in places that are difficult to reach.

Safety wire must be installed in a manner that will prevent the tendency of the part to loosen.

Safety wire must never be overstressed. The wire will break under vibrations if twisted too tightly.

Safety-wire ends must be bent under and inward toward the part to avoid sharp or projecting ends, which might present a safety hazard.

Never over torque or loosen to obtain proper alignment of the holes.

Safety wire must not be nicked, kinked, or mutilated.

FAA examples

The direction of twist from the second to the third unit is counter clockwise in figure to keep the loop in position against the head of the bolt.

The wire entering the hole in the third unit will be the lower wire and by making a counter clockwise twist after it leaves the hole, the loop will be secured in place around the head of that bolt.

Parts are wired so that the loosening tendency of either part is counteracted by tightening of the other part. Fig 6

Fig 6

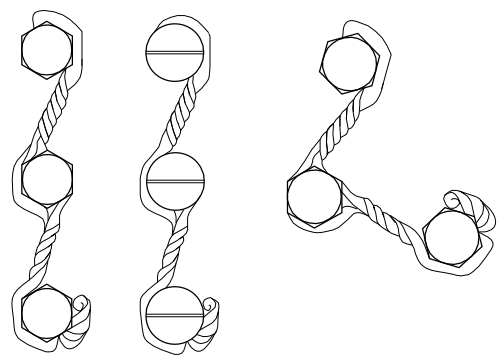

The direction of twist from the second to the third unit in Fig 7 is clockwise to keep the wire in position around the second unit.

Parts are wired so that the loosening tendency of either part is counteracted by tightening of the one part.

Fig 7

Fig 8 show methods for wiring various standard items.

Wire may be wrapped over the unit rather than around it when wiring castellated nuts or on other items when there is a clearance problem.

Fig 8

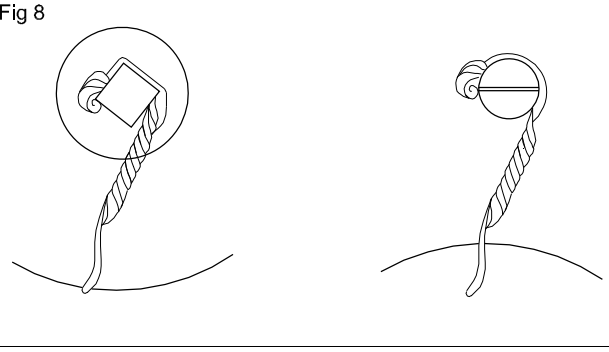

Fig 9 shows the method for wiring bolts in different planes. Note that wire should always be applied so that tension is in the tightening direction.

© NIMI NOT TO BE REPUBLISHED

Fig 9

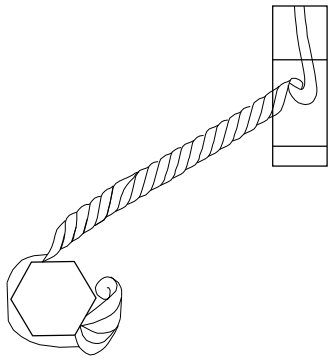

Hollow-head plugs shall be wired as shown with the tab bent inside the hole to avoid snags and possible injury to personnel working on the engine (Fig 10).

Fig 10

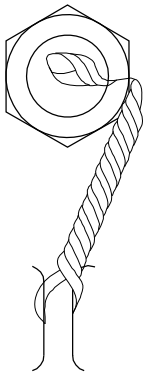

Correct application of single wire to closely spaced multiple group (Fig 11).

Fig 11

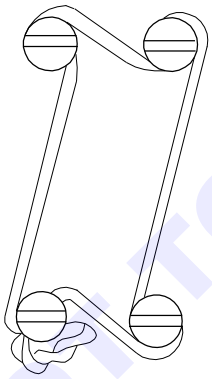

Fig 12 shows correct method for wiring adjustable connecting rod.

Fig 12

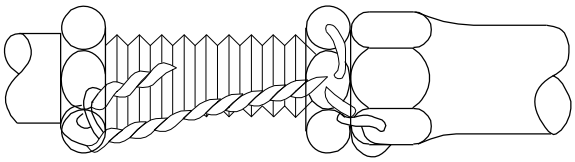

Fig 13 shows correct method for wiring the coupling nut on flexible line to the straight connector brazed on rigid tube.

Fig 13

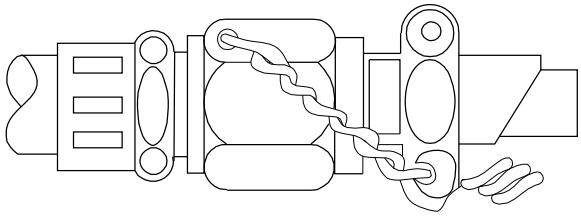

Fittings incorporating wire lugs shall be wired as shown in Fig 14. Where no lock-wire lug is provided, wire should be applied as shown in figure15 with caution being exerted to ensure that wire is wrapped tightly around the fitting. Fig 15

Fig 14

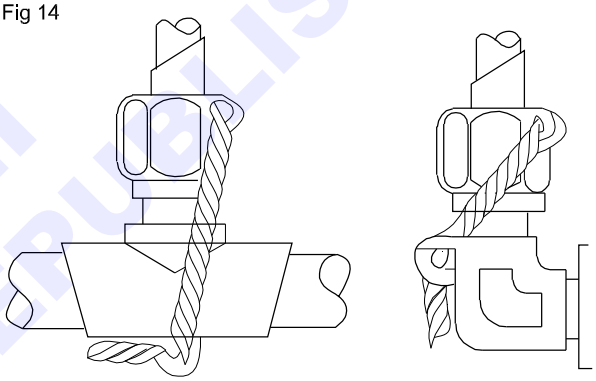

Fig 15

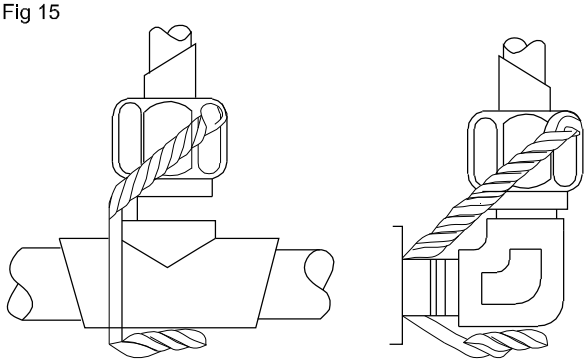

Coupling nuts attached to straight connectors shall be wired as, shown, when hex is an integral part of the connector. Fig 16

Coupling nuts on a tee shall be wired, as shown above, so that tension is always in the tightening direction.

© NIMI NOT TO BE REPUBLISHED

Fig 16

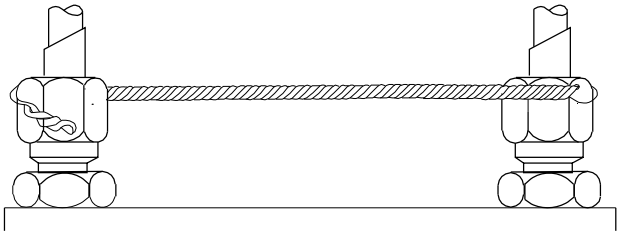

Fig 17

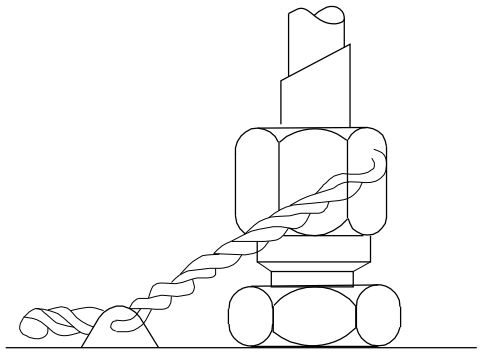

Fig 18

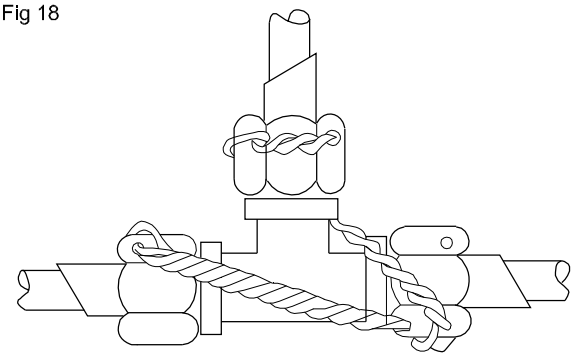

© NIMI
NOT TO BE REPUBLISHED

Documentation to wiring practices

Objectives: At the end of this lesson you shall be able to
- **explain the different wiring documents**
- **state the symbols used in wiring documents.**

Wiring documents

Wiring plan/graph (Fig 1)

It is a dimensional diagram, representing, in synoptic form, the general appearance of the wiring with the positioning of the connectors, splices and structure (frame, etc.) references.

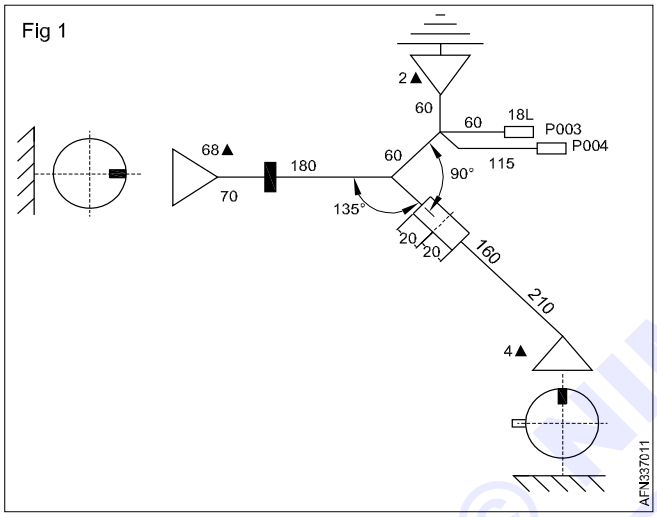

This type of diagram is used when making wiring in the workshop. The assembly of the wiring on the aircraft will be carried out after its complete manufacturing.

On this type of diagram, we find:

- The orientation of the connectors as well as their rear connectors,
- The dimensions of the cables, bundles and structural markings,
- The different angles at the right of the junctions.

Schematic diagram (Fig 2)

It is made in synoptic form, gives the main connections between the components and illustrates the operating principle of a circuit and the connections with the other circuits that make up the system.

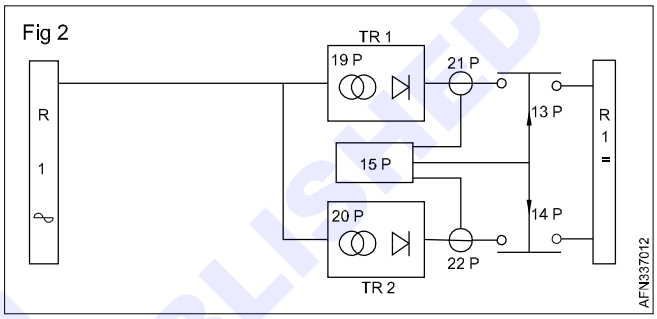

Operating diagram (Fig 3)

It represents all the components, accessories and equipment making up the layout as well as their functional connections.

It allows to follow the detailed functioning of the system.

Wiring diagram (Fig 4)

These diagrams represent all the effective electrical connections between the elements constituting the circuit.

It is a graphical representation with all the elements of a circuit and all the referenced conductors.

© NIMI NOT TO BE REPUBLISHED

Fig 3

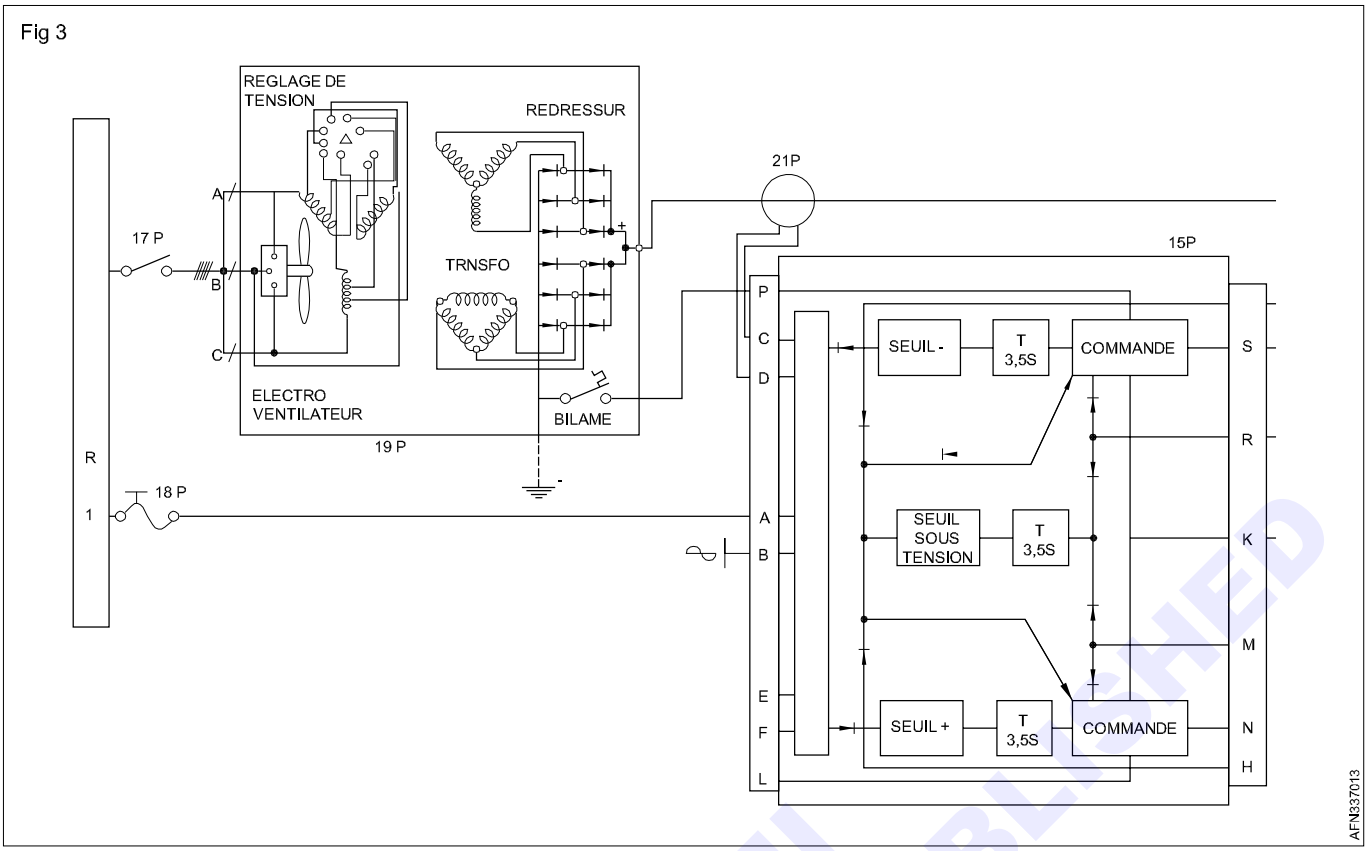

Fig 4

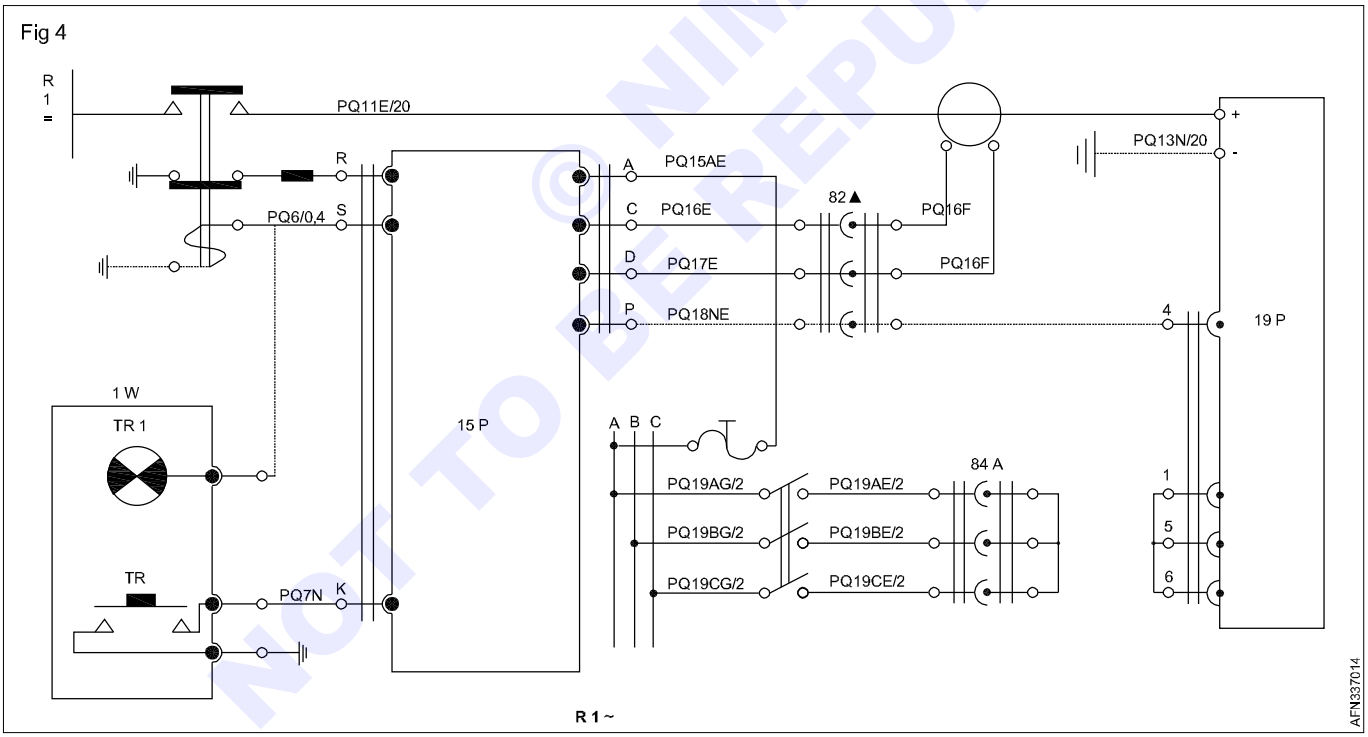

© NIMI NOT TO BE REPUBLISHED

Fig 5

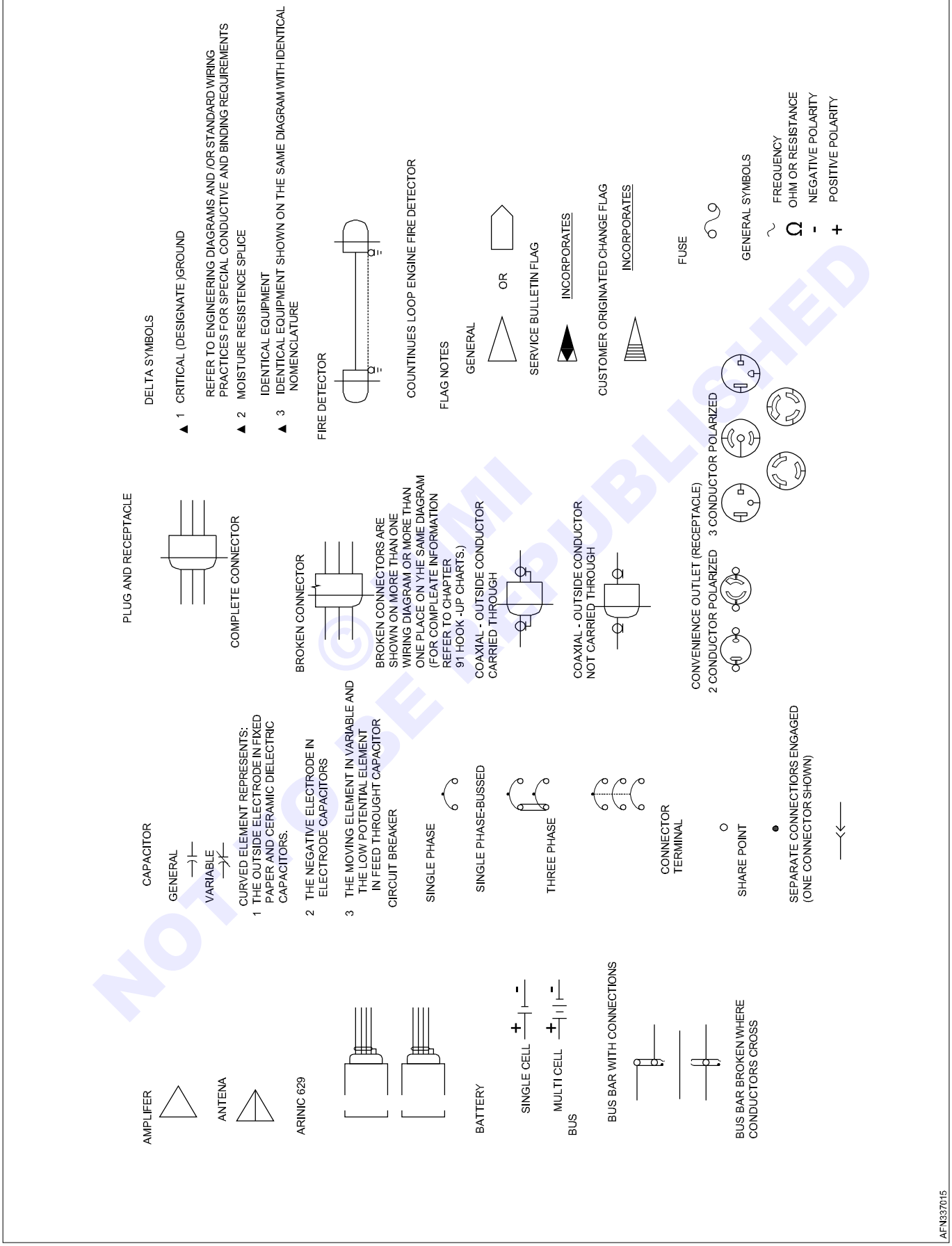

NOT TO BE REPUBLISHED © NIMI

Fig 6

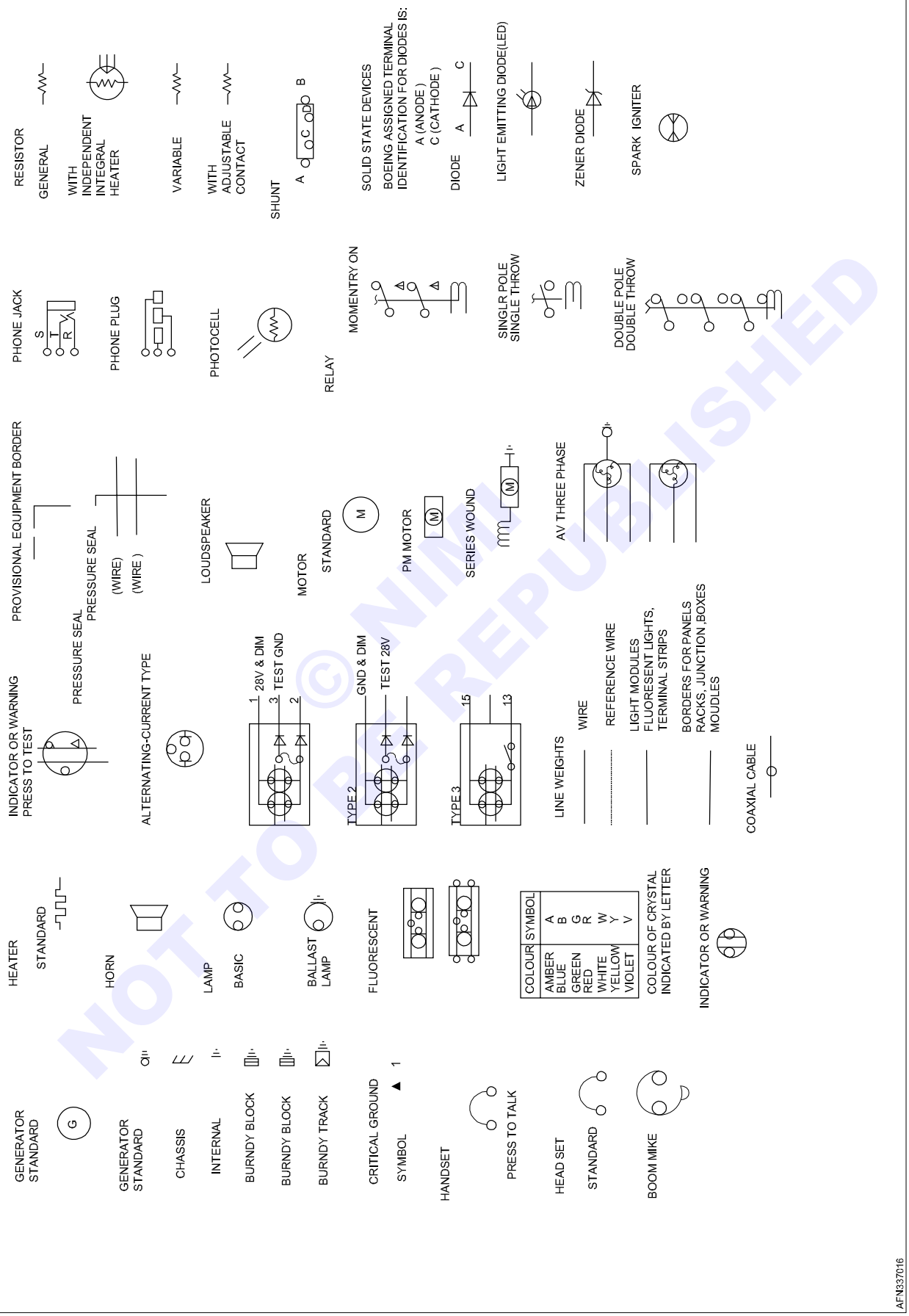

NOT TO BE REPUBLISHED © NIMI

Fig 7

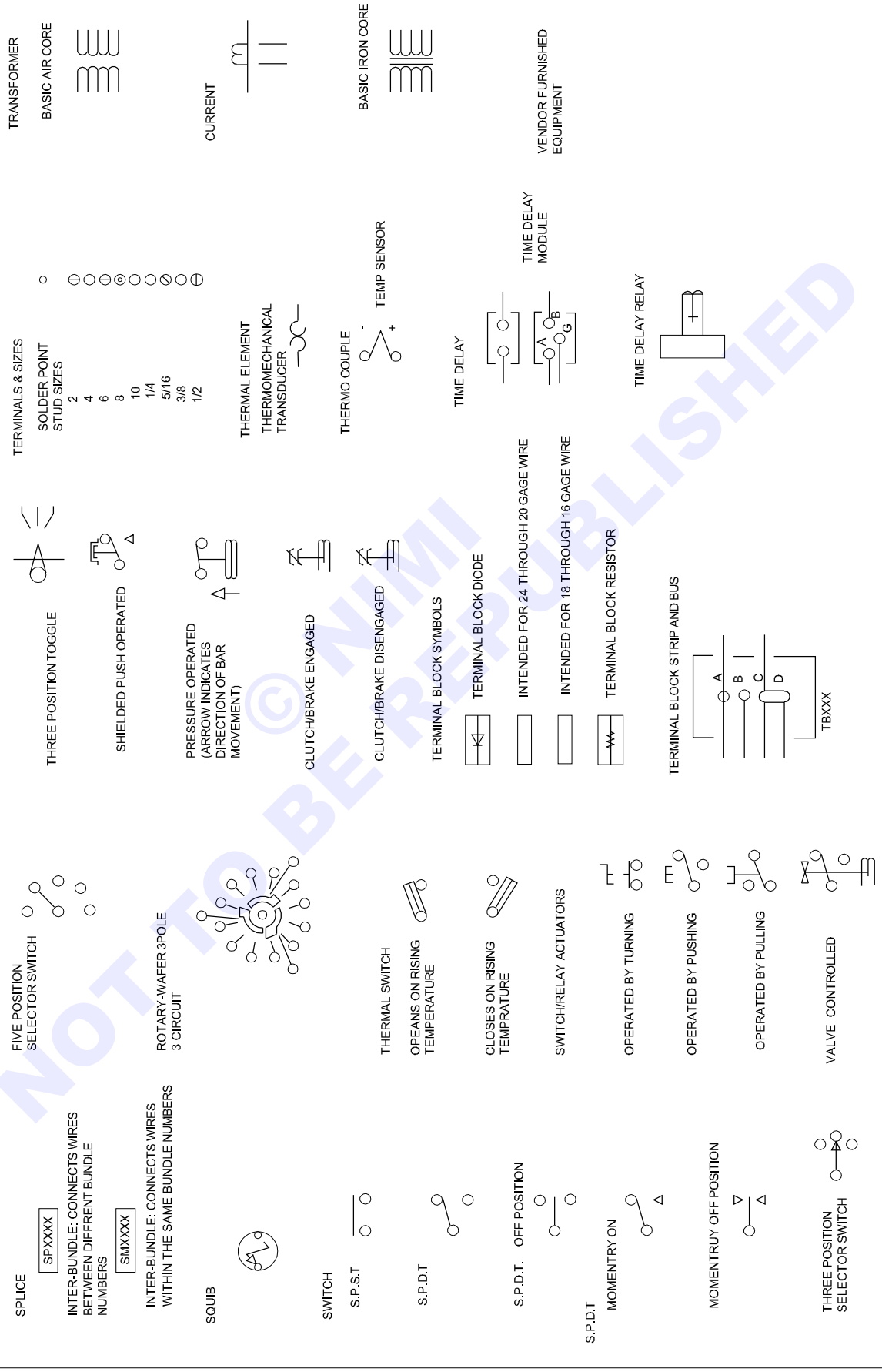

NOT TO BE REPUBLISHED © NIMI

Fig 8

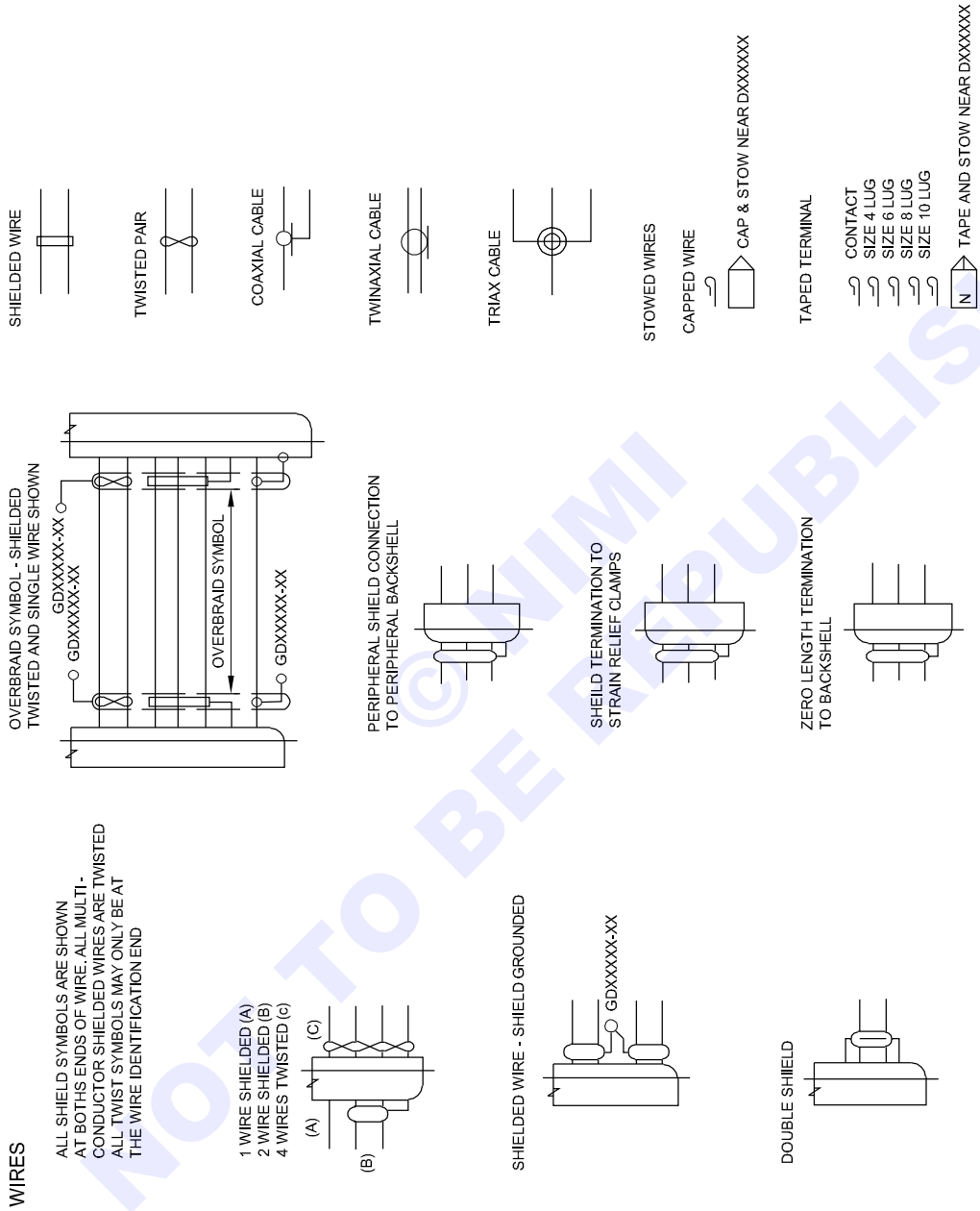

NOT TO BE REPUBLISHED © NIMI

Aeronautic electrical wires and cables

Objective: At the end of this lesson you shall be able to
- **describe the different aeronautical cables and wires**

Wire

A single means of electrical interconnection consisting of a conductor within an insulating surround.

Fig 1

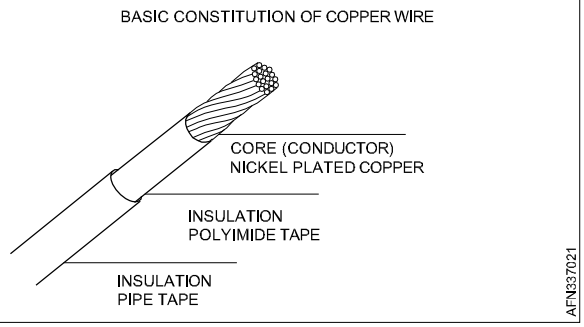

Cable

Two or more insulated conductors contained in a common covering, or two or more insulated conductors twisted or moulded together without common covering.

Standard Wire Gauge (SWG)

The size of the conductor is given by the standard wire gauge number. According to the standards each number has an assigned diameter and cross section.

The standard wire gauge, shown in Figure 2 could measure the wire size in SWG numbers from 0 to 36. It should be noted that the higher the number of wire gauge the smaller is the diameter of the wire.

Fig 2

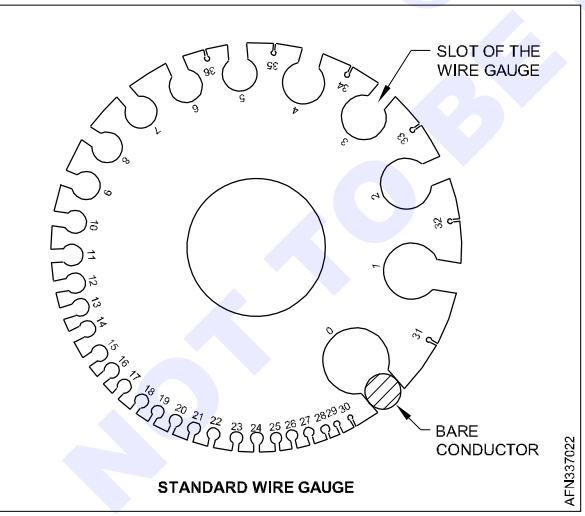

Types of wires

For the purposes of electric installation in aircraft, an insulated wire consists of a metal (copper or aluminium) conductor covered with a dielectric or insulating material. Insulated wire is usually referred to as wire.

Wires used in aircraft contain stranded conductors for flexibility. Insulations may consist of several materials and layers to provide dielectric insulation, thermal protection, abrasion resistance, moisture resistance, and fluid resistance.

Fig 3

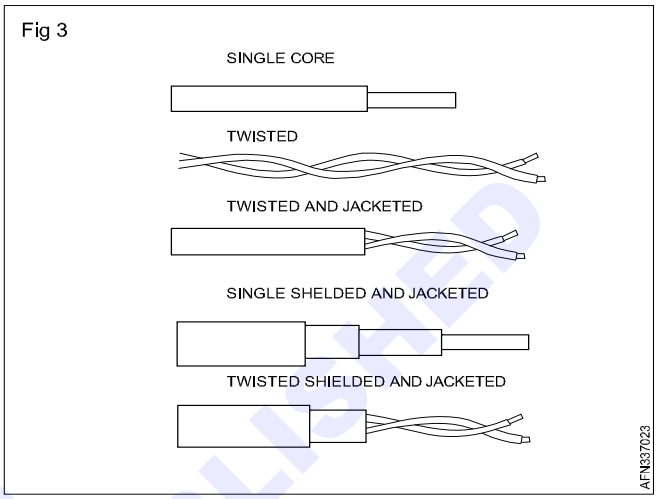

Hook-up Wire: Hook-up wire is designed for component interconnection inside a box or as an airframe wire only where there is a secondary insulation covering for abrasion protection. Hook-up wire is usually classed as lightweight and has only one insulation covering.

Hook-up wire is normally of a smaller overall diameter than the equivalent gauge airframe wire.

Airframe wire: Airframe wire is specifically designed for use as component interconnection wire in the airframe of aerospace vehicles. Airframe wire is usually classed as normal or medium weight and has two insulation coverings for protection against abrasions.

This type of wire should be used where a secondary covering of insulation material is not required.

Unshielded (Fig 4)

Fig 4

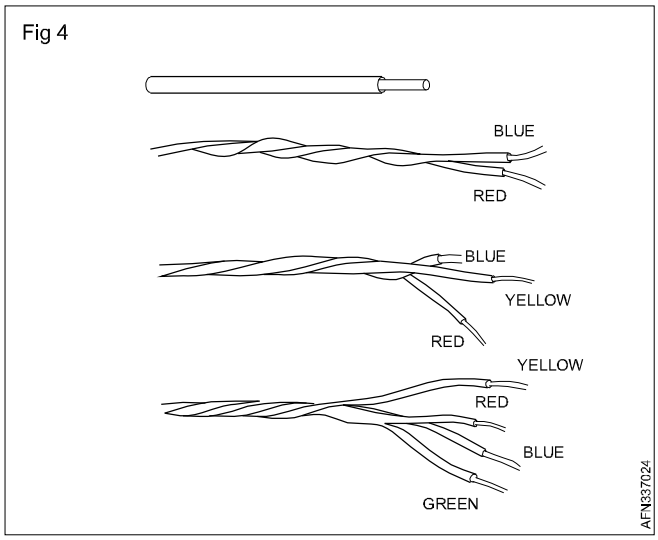

© NIMI NOT TO BE REPUBLISHED

Unshielded and jacketed (Fig 5)

Fig 5

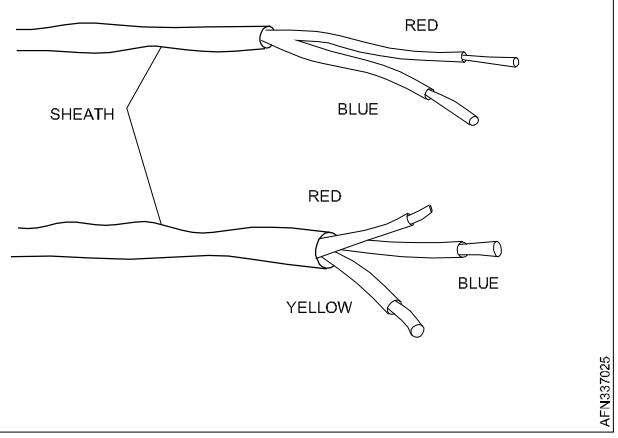

Shielded and jacketed (Fig 6)

Fig 6

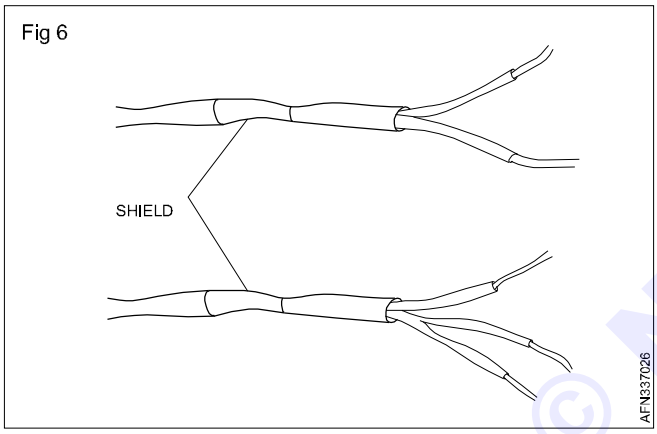

European hook-up and airframe wiring designation

EN 2267 - Unshielded

EN 2266 - XX	Y	00	S
007: DMA family 008: DM family (suitable for UV laser marking) 009: DRA family 010: DR family (suitable for UV laser marking) 011: DZA family 012: DZ family (suitable for UV laser marking)			
Number of cores See table 1			
Gauge code See table 2			
S: Single core. For colour code see table 3 P: Multi-core. For colour code see table 1			

EN 2266 - Unshielded and jacketed

EN 2267 - XX	Y	00	P
008: Specification D assault			
Number of cores See table 1			
Gauge code See table 2			
P: Multi-core. For colour code see table 1			

EN 2713 - Shielded and jacketed

EN 2713 - XX	Y	00	S
007: CF family 012: Specification D assault			
Number of cores See table 1			
Gauge code See table 2			
F: Single core. For colour code see table 4			

EN 2714 - Shielded and jacketed

EN 2714 - XX	Y	00	S
011: DM family 013: DR family			
Number of cores See table 1			
Gauge code See table 2			
F: Single core. For colour code see table 4			

© NIMI NOT TO BE REPUBLISHED

Table 1

Number of core (Y code) and colour code

Code (Y)	No. of core	Colours
B	2	Red / Blue
C	3	Red / Blue / Yellow
D	4	Red / Blue / Yellow / Green
E	5	Red / Blue / Yellow / Green / White
F	6	Red / Blue / Yellow / Green / White / Black
G	7	Red / Blue / Yellow / Green / White / Black / Brown
H	8	Red / Blue / Yellow / Green / White / Black / Brown / Orange
I	9	Red / Blue / Yellow / Green / White / Black / Brown / Orange / Violet
J	10	Red / Blue / Yellow / Green / White / Black / Brown / Orange / Violet / Grey

Jacket Colour (If Present):

Gauge Codes 002/006/012 (Swg24/20/16), Light Blue.

Other Gauges, White.

Table 2

Gauge code

Gauge	SWG code	Nominal cross section (mm2)
001	26	0.15
002	24	0.25
004	22	0.4
006	20	0.6
010	18	1
012	16	1.2
020	14	2
030	12	3
051	10	5
090	8	9
140	6	14
220	4	22
340	2	34
420	1	42
530	0	53
680	00	67
850	000	85
1070	0000	107

Table 3

Single core colour code

Code (Y)	No. of core	Colours
001	26	Light yellow
002	24	White
004	22	Light Green
006 to 340	20 to 2	White

Table 4

Number of core (Y code) and colour code

Code (Y)	No. of core	Colours
A	1	White **
B	2	Red / Blue
C	3	Red / Blue / Yellow
D	4	Red / Blue / Yellow / Green
E	5	Red / Blue / Yellow / Green / White
F	6	Red / Blue / Yellow / Green / White / Black
G	7	Red / Blue / Yellow / Green / White / Black / Brown
H	8	Red / Blue / Yellow / Green / White / Black / Brown / Orange
I	9	Red / Blue / Yellow / Green / White / Black / Brown / Orange / Violet
J	10	Red / Blue / Yellow / Green / White / Black / Brown / Orange / Violet / Grey

Jacket Colour (If Present):

Gauge Codes 002/006/012 (Swg24/20/16), Light Blue.

Other Gauges, White.

**: Light Green, For Gauge Code004 (Swg22) And Light Yellow For Gauge Code 001 (Swg26)

© NIMI NOT TO BE REPUBLISHED

Wiring tools - wire preparation

Objectives: At the end of this lesson you shall be able to
- **state the basic tools used for wiring preparation**
- **describe how to cut a wire**
- **describe how to strip a wire.**

Before wire and cable can be installed in aircraft and connected to components it must be prepared by cutting to the appropriate lengths and preparing the wire ends for attachment to connectors, terminal lugs, etc.

Measuring tools

Measuring tape (Fig 1)

The measuring tapes are made with a curved, but rigid, cross section flexible enough to be rolled up.

Long, flat tapes need support over their full length to avoid sagging.

Lack of support can cause reading errors. The most common types of steel tapes have a hook at one end to let one person take all the readings.

This tool is used for large measurements when manufacturing harnesses, cutting cables, etc.

Fig 1

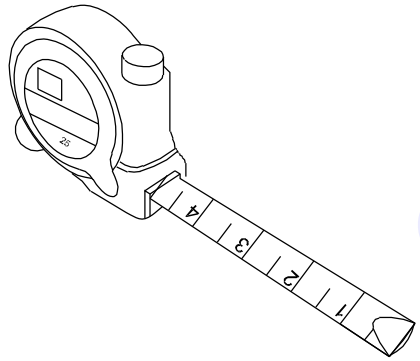

Ruler (Fig 2)

See semester 1 courses training (1.2.14).

Fig 2

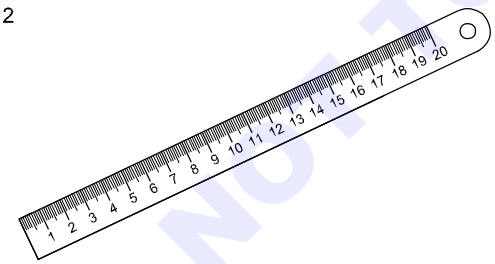

Cutting

Cut all wires and cables to lengths given on drawings or wiring diagrams. Cut wire and cable so that cut is clean, and wire is not deformed.

After cutting, reshape large diameter wire with pliers, if necessary.

Make sure that blades of cutting tools are sharp and free from nicks. A dull blade will deform and extrude wire ends.

Diagonal cutting pliers (Fig 3)

The diagonal cutting pliers have a fixed pivot. The jaws are offset by about 15 degrees and are shaped to give enough knuckle clearance while making flush cuts.

The diagonal cutting pliers are used for cutting small, light materials such as wire, cotter pins, and similar materials.

Fig 3

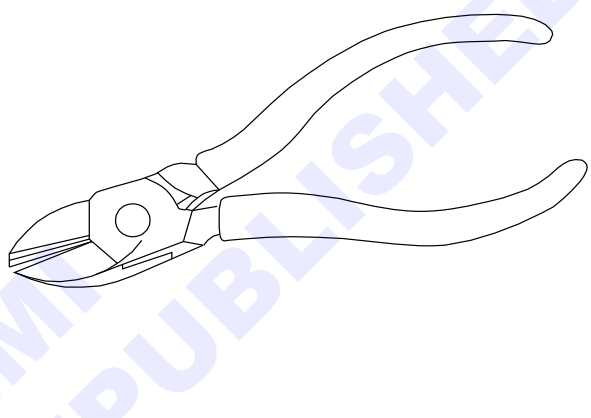

These pliers are not to be used to hold or grip objects.

Universal pliers (Fig 4)

The universal side cutting pliers have serrated jaws, a rod-gripping section, side cutters, wire cropper, a fixed pivot, and parallel handles. The flat serrated jaws are used to bend sheet metal and twist electrical wire.

The rod-gripping section is used to hold rods and bend small rods.

The side cutters are located just above the pivot point, where maximum pressure may be applied. They are ground at an angle permitting sharp flush cuts on electrical wire.

A pair of croppers is located above the pivot. They are used to shear larger wire.

Fig 4

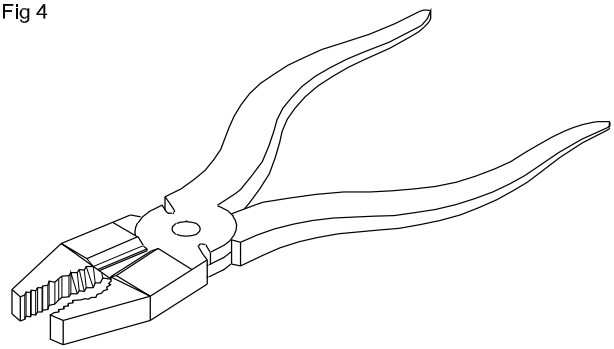

© NIMI NOT TO BE REPUBLISHED

Striping

Before wire can be assembled to connectors, terminals, etc, the insulation must be stripped from connecting ends to expose the bare conductor.

Shop knife (Fig 5)

The shop knife is used to cut paper, cardboard, linoleum, etc. and to strip shielded wires.

Fig 5

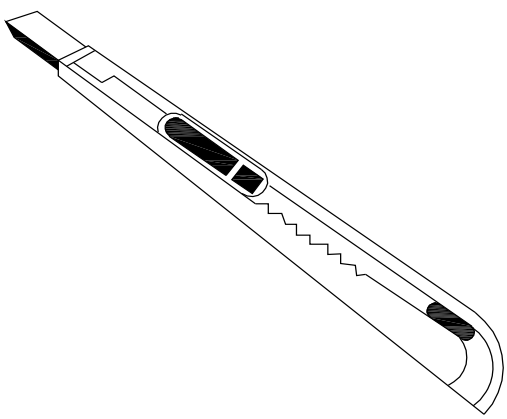

Automatic stripping tool (Strip master) (Fig 6)

This tool is used to strip single wires. The jaws block the cables during stripping.

Fig 6

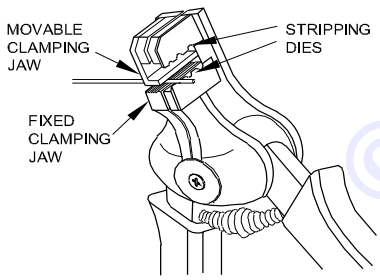

Insulation stripping Procedure with automatic stripping tool (Fig 7)

- The end of the cable must have a clean cut.
- Determine the stripping length to be applied to the cable.
- Determine the cavity to be used depending on the wire gauge of the cable to be stripped.
- Position the wire centrally in the appropriate cavity.
- Fully squeeze the tool handles.
- Release the handles for opening the blades and remove the stripped wire.
- After stripping, the wire strands should be twisted together in the same direction as the normal lay of the wire.

Fig 7

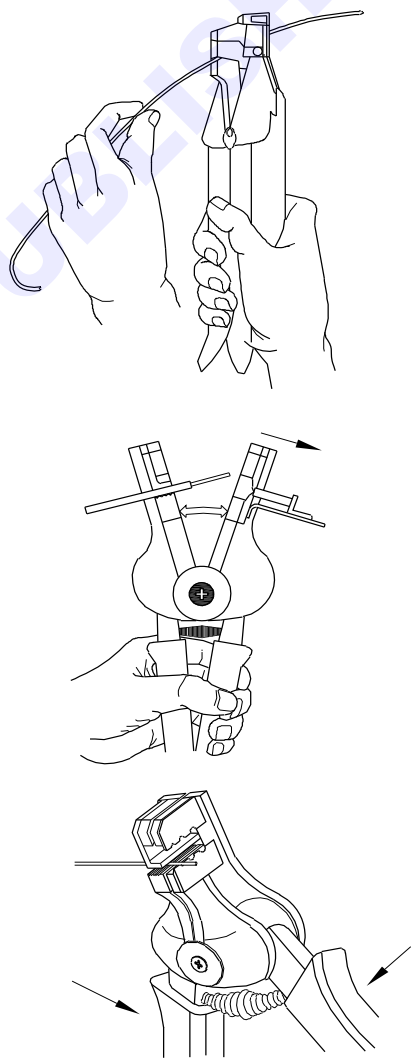

© NIMI NOT TO BE REPUBLISHED

Corrosion: Definition and forms of corrosion

Objectives: At the end of this lesson you shall be able to
- **state the corrosion principles**
- **state the main types of corrosion.**

Introduction

Corrosion is a slow (or rapid), progressive deterioration of a metal's properties such as its appearance, its surface aspect, or its mechanical properties under the influence of the surrounding environment: atmosphere, water, seawater, various solutions, organic environments, other material, etc.

Corrosion of metals is caused by the electrochemical reaction between a metal, or an alloy, and an aqueous phase. It proceeds according to a complex electrochemical process that is related to the atomic structure of matter.

This reaction occurs because of the tendency of metals to return to their naturally occurring state, usually oxide or sulphide. For example, iron in the presence of moisture and air will return to its natural state, iron oxide or rust. Aluminium form corrosion products that are white oxides (alumina).

Theory of corrosion

All metals will corrode to some extent in a natural environment. When a metal corrodes, the atoms lose electrons and become positively charged. In solution, the positively charged metal ions can combine with negatively charged ions to form corrosion products.

- Four conditions must exist before metal corrosion can occur (Figure 1):
- Presence of a metal that will corrode (anode).
- Presence of a dissimilar conductive material (cathode) which has less tendency to corrode.
- Presence of a conductive liquid (electrolyte).
- Electrical contact between the anode and cathode.

Fig 1

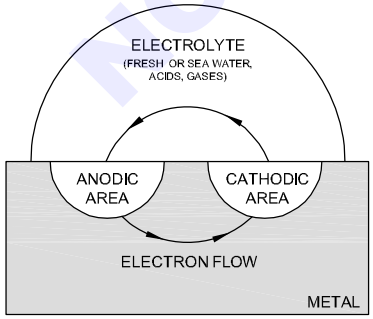

AF20N247111

Direct chemical attack

Direct chemical attack, or pure chemical corrosion, is an attack resulting from a direct expo-sure of a bare surface to caustic liquid or gaseous agents.

Unlike electrochemical attack where the anodic and cathodic changes may be taking place a measurable distance apart, the changes in direct chemical attack are occurring simultaneously at the same point.

Electrochemical Attack

An electrochemical attack may be likened chemically to the electrolytic reaction that takes place in electroplating or anodizing. The reaction in this corrosive attack requires a medium, usually water, which is capable of conducting a tiny current of electricity.

All metals and alloys are electrically active and have a specific electrical potential in a given chemical environment.

This potential is commonly referred to as the metal's nobility. The less noble a metal is, the more easily it can be corroded.

Factors influencing corrosion

Some factors which influence metal corrosion and the rate of corrosion are the:

- Type of metal.
- Heat treatment and grain direction.
- Presence of a dissimilar material.
- Anode and cathode surface areas.
- Temperature.
- Presence of electrolytes (water, seawater, battery fluids, etc.).
- Presence of oxygen.
- Presence of different concentrations of the same electrolyte.
- Presence of biological organisms.
- Mechanical stress.
- Time of exposure to a corrosive environment.

© NIMI NOT TO BE REPUBLISHED

Forms of corrosion

Corrosion is catalogued and typed in many ways.

Uniform corrosion (Fig 2)

Uniform corrosion is probably the most common type of corrosion. It results from a direct chemical attack on a metal surface that proceeds uniformly over the entire exposed surface.

Fig 2

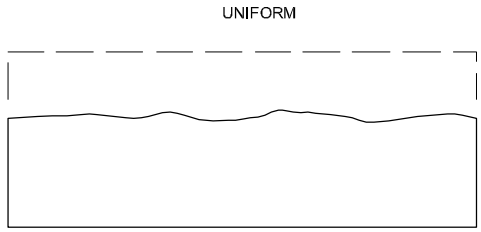

Pitting corrosion (Fig 3)

Pitting is a form of localized attack that results in little holes in the metal. Pitting is usually first noticeable as a white powdery deposit, similar to dust, which blotches the surface. When the deposit is cleaned away, tiny pits or holes can be seen in the surface.

Fig 3

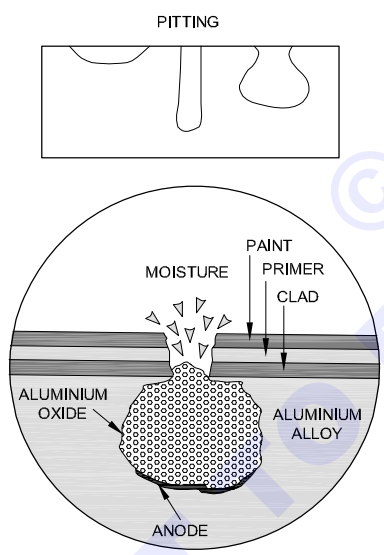

Galvanic corrosion (Fig 4)

This corrosion occurs when different metals are in contact with each other and an electrolyte, such as sea water. It is usually recognizable by the presence of a build-up of corrosion deposits at the joint between the metals.

The potential for galvanic corrosion is greatest when the two metals are well separated from each other in the galvanic series (see Fig 5) and are in electrical contact

Fig 4

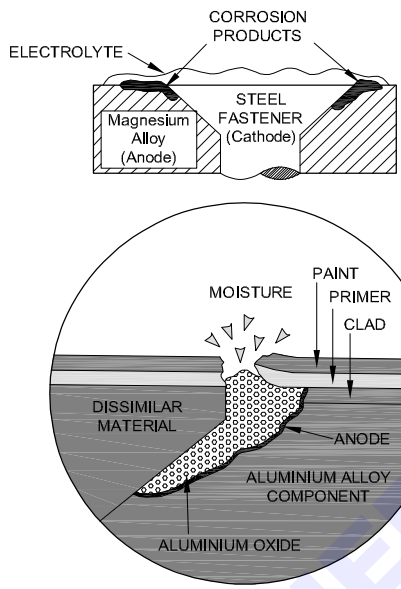

Fig 5

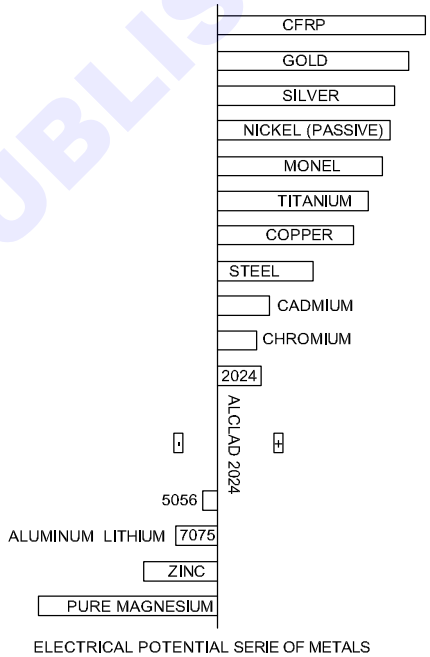

Intergranular corrosion (Fig 6)

Intergranular corrosion is an attack on the grain boundaries of the metal.

Frequently the grain boundaries are anodic (tend to corrode more easily) to the metal within the grain. When an electrolyte is present, rapid selective corrosion of the grain boundaries occurs.

Exfoliation corrosion (Fig 7)

Exfoliation corrosion is an advanced form of intergranular corrosion where the surface grains of a metal are lifted up by the force of expanding corrosion products occurring at the grain boundaries. The lifting up or swelling is visible evidence of exfoliation corrosion.

NOT TO BE REPUBLISHED © NIMI

Fig 6

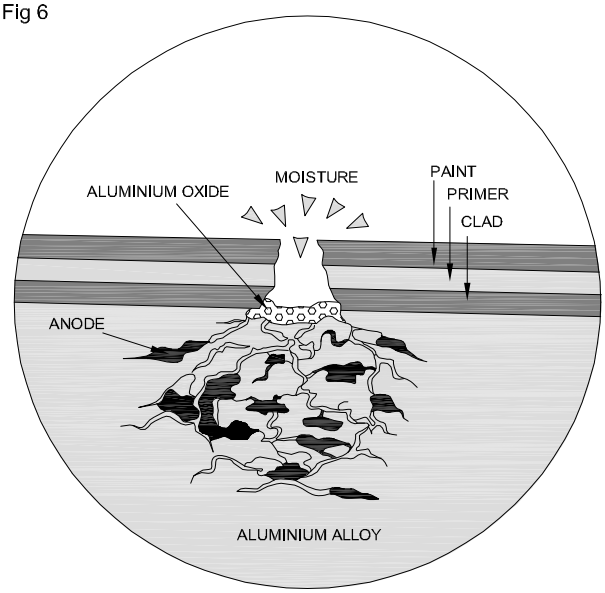

Exfoliation occurs on extruded, rolled, wrought, and forged high strength aluminium and magnesium parts.

Crevice corrosion (Fig 8)

Crevice corrosion is one of the most familiar types of corrosion. Field experience shows that this type of corrosion may occur in any crevice where a stagnant solution has pooled.

Crevices are usually located at lap joints and under bolt or rivet heads.

Fig 7

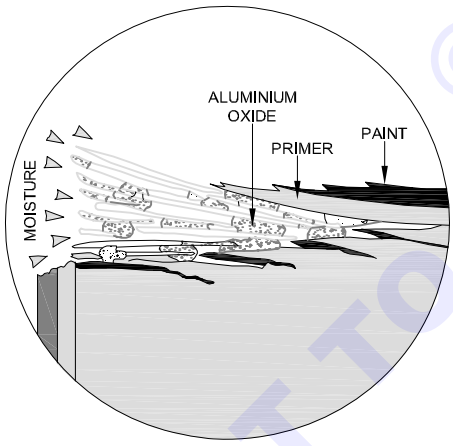

Filiform corrosion (Fig 9)

Filiform corrosion is a form of crevice corrosion which occurs on metal surfaces having a thin organic protective coating (paint or primer). It is recognized by its characteristic wormlike trace of corrosion products beneath the coating.

It starts at breaks in the coating system, such as scratches and cracks around fasteners and seams, and proceeds underneath the coating, due to the diffusion of water vapor and oxygen from the air through the coating

Fig 8

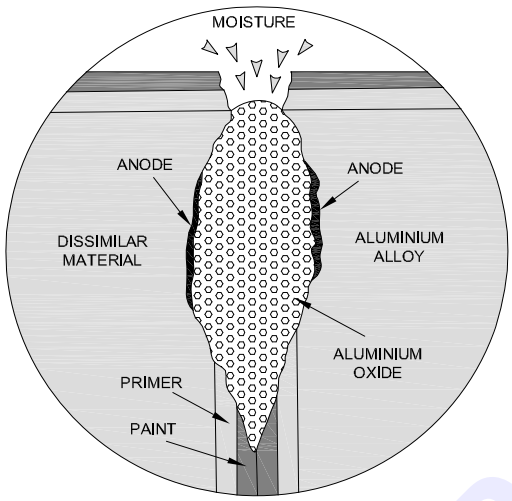

Fretting corrosion

Fretting corrosion occurs at contact areas between materials under load subject to repeated vibration. The relative motion needed to produce fretting is extremely small. The corrosion products increase the wear of the surface, and the wear exposes more bare metal surface to be corroded.

Stress corrosion (Figure 10)

Fig 10

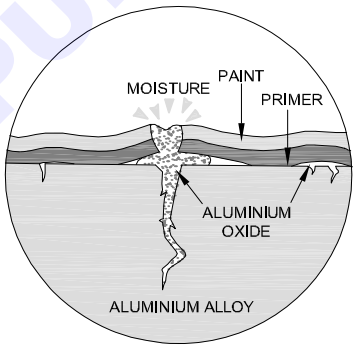

Corrosion - Pictures

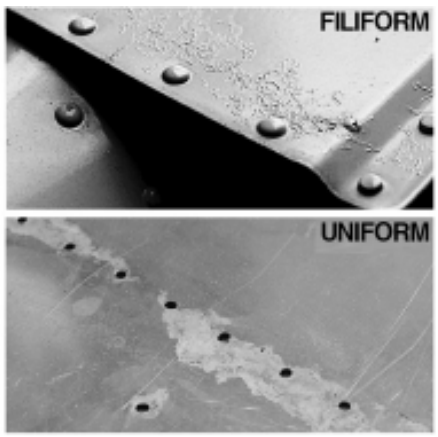

© NIMI NOT TO BE REPUBLISHED

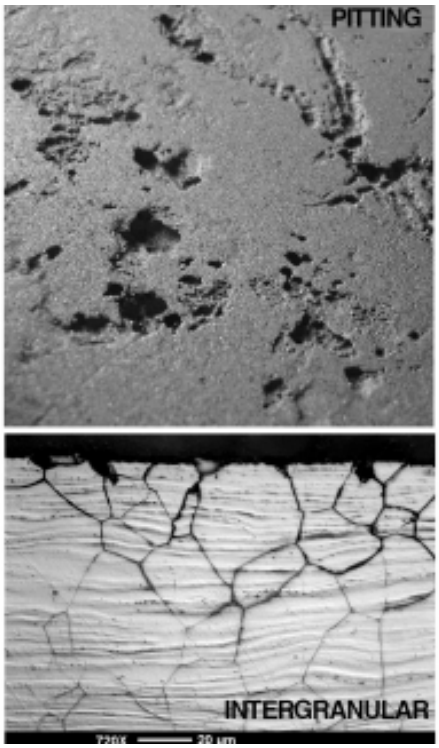

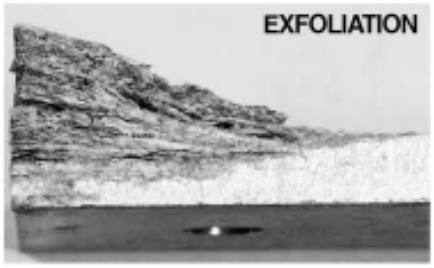

Methods of corrosion protection

Objectives: At the end of this lesson you shall be able to
- **state the basic of corrosion protection**
- **state the main surface treatments for aluminium alloys.**

In addition to the anode, there are three other components that are necessary for corrosion to occur: an aggressive environment, a cathode where the reduction reaction occurs, and an electron-conducting path between the anode and the cathode.

The basic concept for most methods of corrosion protection is to remove one or more of these cell components so that the pure metal or metal alloy of interest will not corrode. Another widely used corrosion protection approach is to change the nature of the anode so that it becomes the cathode

Surface treatments that aid in preventing corrosion are of several different types. There are organic coatings or paints that provide a barrier between a corrosive environment and the aluminum surface.

There are inorganic coatings, including claddings, and enhanced oxides, such as anodized films and conversion coatings.

Types of Surface Protection

The protection build-up is not the same in all areas of the aircraft structure. Some components are manufactured from corrosion-resistant material and require no surface protection. There are different protective treatments:

- Paint coatings.
- Cladding.
- Anodization.
- Conversion coatings.
- Etc.

Coatings

Coatings generally protect the metal by imposing a physical barrier between the metal substrate and the

environment. Three common types of coatings are organic, inorganic, and metallic.

Organic coatings afford protection by providing a physical barrier between the metal and the environment.

These coatings can also contain corrosion inhibitors. Organic coatings include paints, resins, lacquers, and varnishes.

Cladding

Alclad aluminum is a duplex product in which a thin surface layer of one aluminum alloy (usually 5 to 10% of the total thickness) is metallurgically bonded to the main core alloy selected for strength. In order to ensure effective sacrificial cathodic protection of the core alloy, the clad alloy is usually selected to be at least 100 mV anodic to the core.

The surface layer is normally 1xxx for 2xxx cores, 7072 for 3xxx, 5xxx, 6xxx, and 7xxx cores.

© NIMI NOT TO BE REPUBLISHED

Anodized Films pre-treatment

A commercial surface treatment unique to aluminum is anodizing. The object to be treated is immersed as the anode in an acid electrolyte, and a direct current is applied. Oxidation of the surface occurs to produce a greatly thickened, hard, porous film of aluminum oxide. This film is then normally immersed in boiling water to seal the porosity and render the film impermeable

Conversion Coatings

A number of proprietary chemical immersion treatments, such as Alodine and Bonderite (Henkel Surface Technologies), Iridite (MacDermid Inc.), and others, are used to produce a complex surface conversion coating thick on aluminum sheet and extrusions before painting in a factory operation, compared to 5 nm for an untreated surface. The proprietary solutions are acidic and contain chromates, phosphates, and other chemicals.

Surfaces protection treatments for aluminium alloys

Objectives: At the end of this lesson you shall be able to
- **state the mains anodising process**
- **state the chemical conversion process.**

Chemical Conversion Coating (CCC)

The Chemical Conversion Coating process will result in the chemical growth of a chromated aluminium oxide/ hydroxide layer of less 1mm in thickness by interaction of a clean aluminium surface with an acid chromate-based solution.

The oxide layer provides corrosion protection and a suitable treatment for adhesion of paint.

The Chemical Conversion Coating process may be either an immersion bath process or a locally applied process (by brush or similar).

In case of local process for repairing, it may be either a water rinsed process after CCC application (AlodineTM 1200 for example) or a non-rinsed process (AlodineTM 1132 for example).

Prior to the chemical conversion procedure:

- The parts shall be free of oil, grease, marking inks and other surface contaminations.
- The surface shall be free from precipitations or smut from alloying elements or pre-processes indicated by the bright and uniform appearance of the surface.

Advantages and application:

Thickness less than 1 micron, tolerances are preserved.

Limited inherent corrosion protection without paint.

Conducts electricity.

Application of primer to CCC should be specified in process document

Coupling treatment for paint adhesion.

Must be covered by a paint scheme, if used for protection purposes.

Restrictions:

For continued operating maximum temperature less than 120°C.

Anodising

Anodising is a process for producing decorative and protective films on components made from aluminium and its alloys. It is essentially a process where a thick film of aluminium oxide is built up on the surface of the aluminium through the use of a direct current electrical supply.

The anodizing process will result in the electrochemical growth of an aluminium oxide/ hydroxide layer by interaction of a clean aluminium surface with a acid based immersion bath with an applied voltage between the parts and a suitable cathode (Figure 1).

The oxide layer produced by the process has a good corrosion resistance when sealed or primed, provides a good paint and adhesive adhesion in unsealed conditions and is an electrical insulator when sealed.

Chromic Acid Anodising (CAA)

Oxide layer produced electrolytically having good corrosion resistance, when sealed or primed.

Surface treatment generally unsealed providing an excellent paints and adhesives adhesion. Exception for unpainted parts (completely or partially) chromic acid anodising is sealed.

The anodising thickness in the range 2 to 5 microns depends on the composition of the alloy.

CAA process affects the fatigue behaviour of aluminium. The application of an appropriate peening/blasting process may be required to reduce this impact.

The temperature limit in service is not affected by the oxide layer.

Is an electrical insulator.

Tartaric Sulphuric Anodising (TSA)

Oxide layer produced by an electrochemical galvanic process having good corrosion resistance, when sealed or painted.

Surface treatment generally unsealed providing an excellent paint adhesion.

Exception for unpainted parts (completely or partially) tartaric acid anodising is sealed.

The anodising thickness in the range 2 to 5 microns depends on the composition of the alloy.

© NIMI NOT TO BE REPUBLISHED

TSA process affects the fatigue behaviour of aluminium. The application of an appropriate peening/blasting process may be required to reduce this impact.

Temperature limit in service is not affected by the oxide layer.

TSA is an electrical insulator.

Sulphuric Acid Anodising (SAA)

Thickness in the range 5 to 15 microns according to the composition of aluminium alloys.

Aluminium oxide film layer thicker than with CAA or equivalent.

Used on normal case without paint.

For decorative purpose may be coloured or painted.

Good corrosion and mechanical erosion resistance.

Better corrosion resistance than CAA or equivalent when unpainted.

Significantly more influence of fatigue strength than CAA or equivalent.

Layer used on fretting surfaces.

Is an electrical insulator

Hard Sulphuric Anodising (HSA)

Electrolytic treatment producing a very hard oxide layer (500 Vickers).

Thickness range: 30 to 100 microns.

Good erosion resistance.

Layer used on fretting surfaces

Is an electrical insulator

© NIMI
NOT TO BE REPUBLISHED

Physical properties of aluminium alloys

Objectives: At the end of this lesson you shall be able to
- **state the main physical properties of aluminium alloys.**

Reminders from previous courses

Aluminium alloy identification system divides alloys into families for simplification.

For wrought alloys a four-digit system is used to produce a list of wrought composition families as follows:

- 1xxx: Controlled unalloyed (pure) composition.
- 2xxx: Alloys in which copper is the principal alloying element, although other elements, notably magnesium, may be specified.
- 3xxx: Alloys in which manganese is the principal alloying element.
- 4xxx: Alloys in which silicon is the principal alloying element.
- 5xxx: Alloys in which magnesium is the principal alloying element.
- 6xxx: Alloys in which magnesium and silicon are the principal alloying elements.
- 7xxx: Alloys in which zinc is the principal alloying element although other elements, such as copper, magnesium, chromium, and zirconium, may be specified.
- 8xxx: Alloys characterizing miscellaneous compositions. The 8xxx series alloys may contain appreciable amounts of tin, lithium, and/or iron.

There are two types of aluminium alloys depending on their hardening.

- Strain hardening, cold-working
- Precipitation or age hardening

Aluminium alloys of series 1000, 3000, 5000 are hardened by strain hardening or cold working.

The 2000, 4000, 6000 and 7000 series by precipitation hardening after heat treatment.

Important Physical Properties

Atomic Structure (Fig 1)

Aluminium is the third most plentiful element known (only oxygen and silicon exist in greater quantities).

The element aluminium, chemical symbol Al, has the atomic number 13.

According to present concepts, this means that an aluminium atom is composed of 13 electrons, each having a unit negative electrical charge, arranged in three orbits around a nucleus having a positive charge of 13.

Fig 1

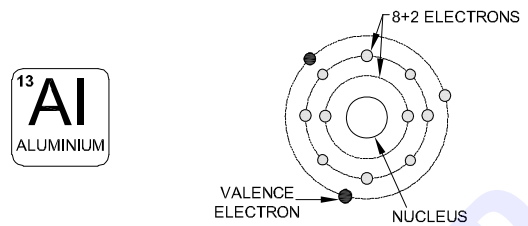

The three electrons in the outer orbit give the aluminium atom a valence or chemical combining power of +3.

Crystal Structure (Fig 2)

When metals change from the molten to the solid state, they assume crystalline structures.

Fig 2

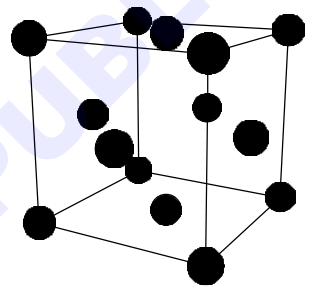

The atoms arrange themselves in definite ordered symmetrical patterns (lattice structures). Aluminium, like copper, silver and gold, crystallizes with the face-centred-cubic arrangement of atoms, common to most of the ductile metals. This means that the atoms form the corners of a cube, with one atom in the centre of each face

The face centred cubic structure is one of the arrangements assumed by close packed spheres at the corners of the cube being at the centre of each sphere. (Fig 3)

Fig 3

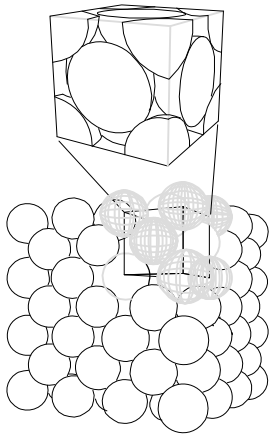

© NIMI NOT TO BE REPUBLISHED

Density

Aluminium has an atomic weight of 26.98 and a specific gravity of 2.70, approximately one-third the weight of other commonly used metals; with the exception of titanium and magnesium (Fig 4).

Fig 4

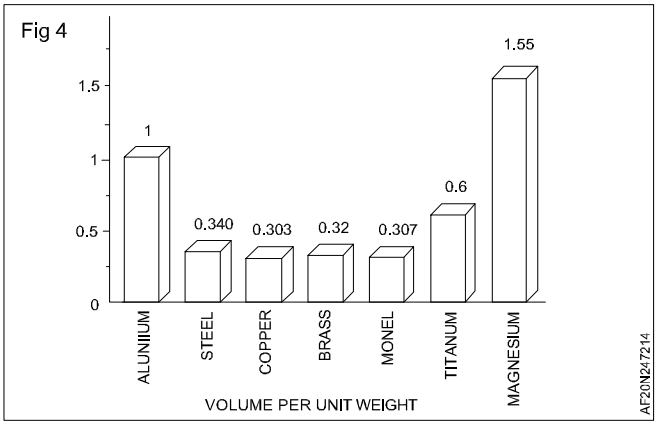

Alloy Systems

The Figures 5 to 7 show the relationship between the properties and characteristics of the various alloy groupings.

Fig 5

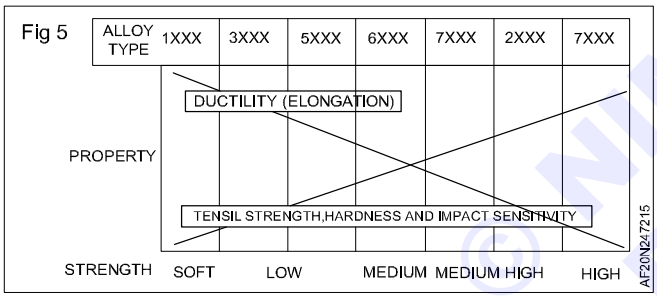

Fig 6

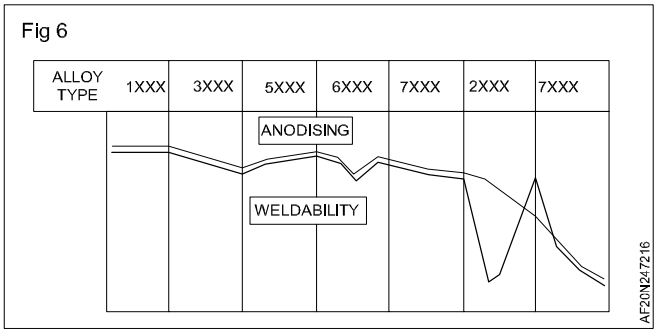

Fig 7

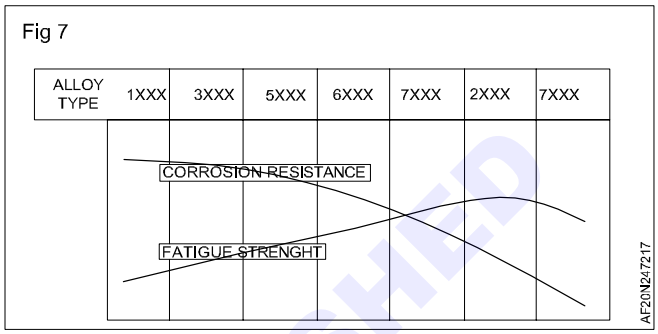

Fig 8

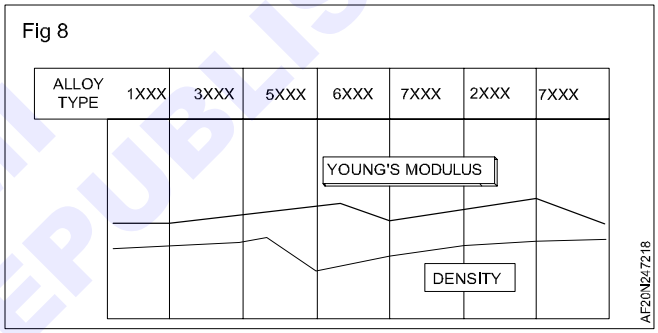

For instance, natural, unalloyed aluminium possesses an ultimate tensile strength of about 70 Mpa which compares to 700 MPa and above for some of the 7XXX series.

Binary phase diagram of Al-Cu, Al-Zn and Al-Mg

Objectives: At the end of this lesson you shall be able to

- **Know how to understand a phase diagram.**
- **understand a phase diagram of aluminium alloy Al-Cu**
- **understand a phase diagram of aluminium alloy Al-Zn**
- **understand a phase diagram of aluminium alloy Al-Mg.**

Definitions

Phases

All materials exist in gaseous, liquid, or solid form (usually referred to as a phase), depending on the conditions of state. State variables include composition, temperature, pressure, magnetic field, electrostatic field, gravitational field, and so on. The term "phase" refers to that region of space occupied by a physically homogeneous material.

Equilibrium

There are three types of equilibria: stable, metastable, and unstable.

Stable equilibrium exists when the object is in its lowest energy condition.

Metastable equilibrium exists when additional energy must be introduced before the object can reach true stability.

Unstable equilibrium exists when no additional energy is needed before reaching metastability or stability.

Equilibrium Conditions

Phase diagrams indicate the relationship between the phases present, alloy composition, and temperature under conditions of slow heating or cooling. Slow heating or cooling allows the atoms within a metal to move around so that the alloy is at equilibrium. However, with many heat treatment processes, a metal is exposed to fast heating and cooling. Under these conditions it is possible

NOT TO BE REPUBLISHED © NIMI

to have phases missing or present compared to what is indicated by the phase diagram. Therefore, it is also important to understand the kinetics of phase transformations, i.e. the effects of temperature, time, cooling rate, and heating rate on phase changes within an alloy.

Phase Diagrams.

In order to record and visualize the results of studying the effects of state variables on a system, diagrams were devised to show the relationships between the various phases that appear within the system under equilibrium conditions

A phase diagram, also called an equilibrium diagram, is a convenient way of representing the phases present in an alloy system at equilibrium as a function of composition and temperature (remember, pressure is one atmosphere).

A system of two components is known as a binary system.

A system with three components as a ternary system.

Brief explication of Binary Diagrams for binary alloys

When two metals or a metal and a small amount of a nonmetal are mixed in their molten states and allowed to cool the result is a binary alloy.

In general, binary alloys can be classified into the following types:

- Simple eutectic type
- Solid solution type
- Combination type

Simple eutectic type

The two components are soluble in each other in the liquid state but are completely insoluble in each other in the solid state.

In general case, consider for studying two components presents which are referred to as metal A and metal B, with the phase diagram as shown in Fig 1.

Fig 1

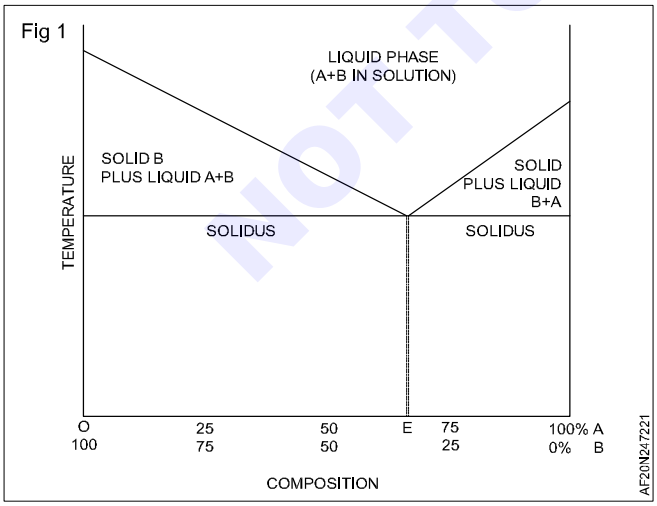

This point on the diagram is called the eutectic*, the temperature at which it occurs is the eutectic temperature**, and the composition is the eutectic composition.

Eutectic: this is the particular composition of two substances which freeze simultaneously at the same temperature.

Eutectic temperature: It is the melting temperature of any alloy with the eutectic composition. The temperature at which the liquid and the solid are in equilibrium.

Solid solution type

The two components are completely soluble in each other both in the liquid state and in the solid state.

Solid solution alloy is a phase, where two or more elements are completely soluble in each other.

Depending on the ratio of the solvent (matrix) metal atom size and solute element atom size, for example: gold/silver alloy, copper/nickel alloy (Fig 2).

Fig 2

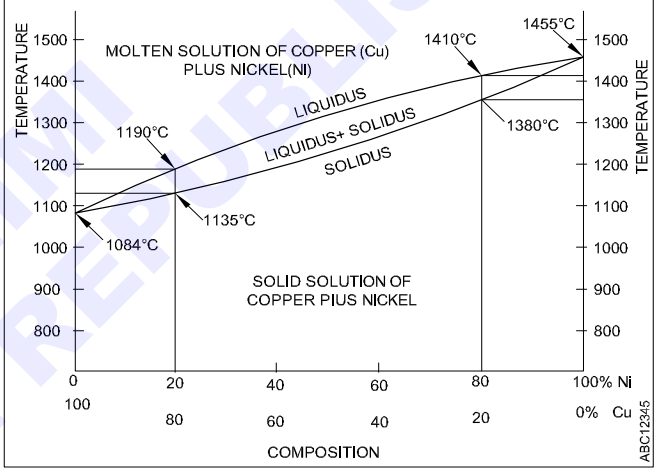

Factors affecting in solubility of solid solution alloys:

- Similarity the space lattice of solvent metal and soluble element.
- Atomic diameters for solvent and soluble must be converges.
- Chemical composition must be near of solvent and soluble.
- Frequency (Hz/s) must be near of solvent and soluble.
- Type the charges of solvent and soluble.

Combination type

The two components are completely soluble in the liquid state but are only partially soluble in each other in the solid state.

Many metals and non-metals are neither completely soluble in each other in the solid state nor are they completely insoluble. Therefore, they form a phase equilibrium diagram of the type shown in Fig 3.

© NIMI NOT TO BE REPUBLISHED

In this system there are two solid solutions labelled α and β. The use of the greek letters α, β, Y, etc., in phase equilibrium diagrams may be defined, in general, as follows:

- A solid solution of one component A in an excess of another component B, such that A is the solute and B is the solvent, is referred to as solid solution β.
- A solid solution of the component B in an excess of the component A, so that B now becomes the solute and A becomes the solvent, is referred to as solid solution ?.
- In a more complex alloy, any further solid solutions or intermetallic compounds which may be formed would be referred to by the subsequent letters of the greek alphabet. That is, Y, φ , δ , etc.

Fig 3

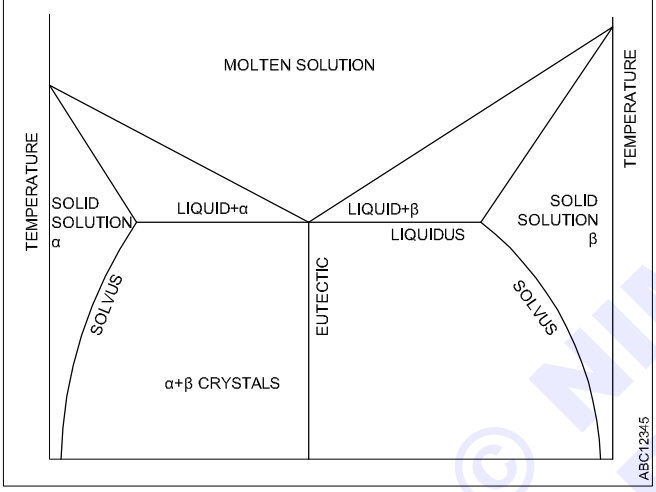

Binary phase diagram of Al-Cu

Aluminum-copper phase diagram is useful for understanding precipitation strengthening in Al-Cu alloys. The amount of copper present in an alloy is plotted on the x-axis. The phase fields of interest are the Al, θ, and Al+θ phase fields on the left-hand side.

Fig 4

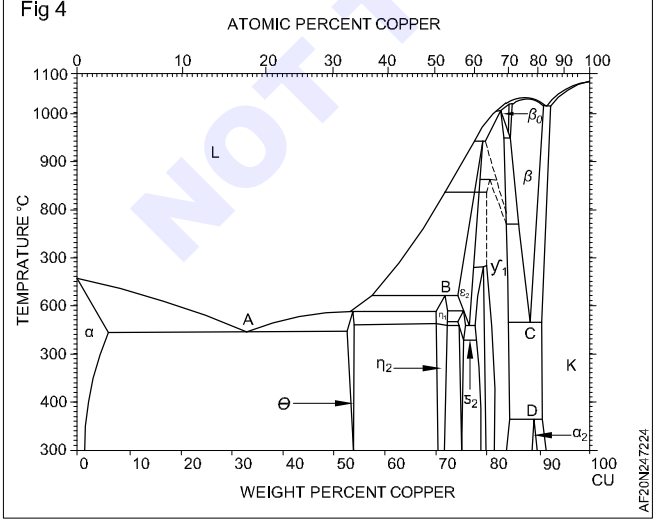

Fig 5

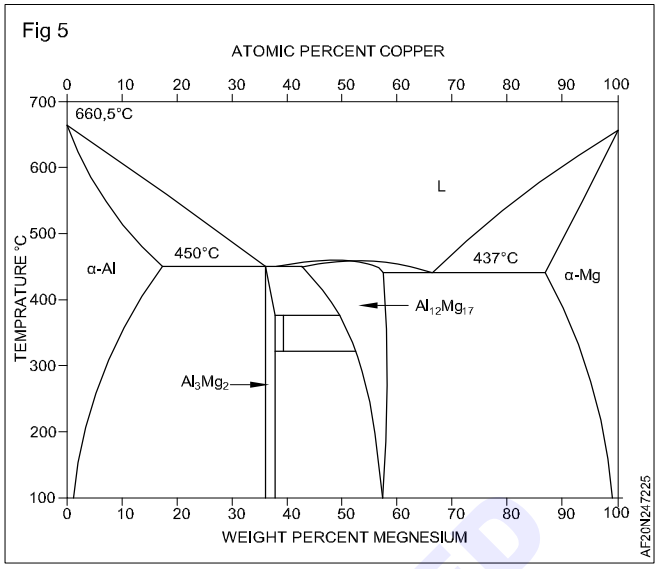

For precipitation strengthening an Al-Cu alloy, this phase diagram indicates the minimum temperature to which an alloy must be heated to put all the copper in solution. This is indicated by the solvus line on the phase diagram. The maximum amount of copper that can contribute to precipitation strengthening is indicated by the maximum amount of copper (5.45 %) that can go into solid solution in the aluminum.

Fig 6

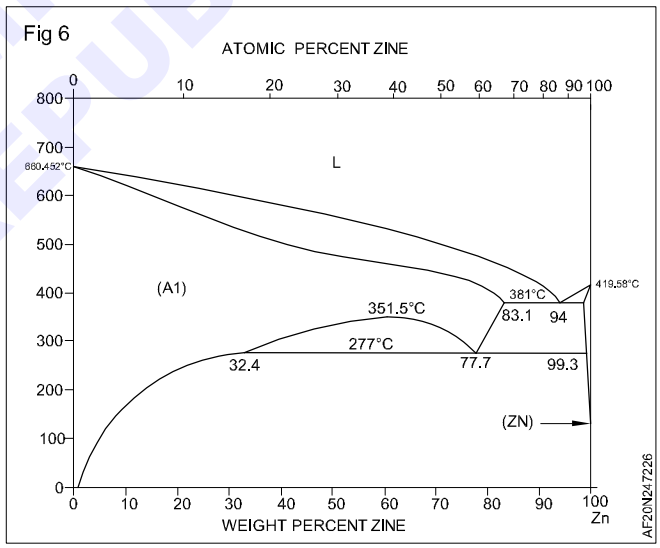

© NIMI NOT TO BE REPUBLISHED

Heat treatment of aluminium alloys

Objectives: At the end of this lesson you shall be able to
- **state the heat treatment of aluminium alloys.**

Reminders from previous courses

Aluminium alloys are classified as heat treatable or non-heat treatable, depending on whether or not they respond to precipitation hardening.

Heat treatable alloys are also produced by the addition of alloying elements to the pure aluminium. These elements include copper (2xxx series), magnesium and silicon, which is able to form the compound magnesium silicide (6xxx series), and zinc (7xxx series).

1xxx, 3xxx and 5xxx series alloys are designated to the major non-heat treatable aluminium. These alloys consist of the pure aluminium alloys (1xxx series), manganese alloys (3xxx series), silicon alloys (4xxx series) and magnesium alloys (5xxx series).

Temper designation

The temper designation follows the wrought designation number with a dash, a letter, and potentially a one to three-digit number.

NON-HEAT TREATABLE ALLOYS

Temper Desig-nation	Definition
-0	Annealed recrystallized applies to softest temper of wrought products.
-H1	Strain-hardened only. Applies to products which are strain-hardened to obtain the desired strength without supplementary thermal treatment.
-H12	Strain-hardened one-quarter-hard temper.
-H14	Strain-hardened half-hard temper.
-H16	Strain-hardened three-quarters-hard temper.
-H18	Strain-hardened full-hard temper.
-H2	Strain-hardened and then partially annealed. Applies to products which are strain-hardened more than the desired final amount and then reduced in strength to the desired level by partial annealing.
-H22	Strain-hardened and partially annealed to one-quarter-hard temper.
-H24	Strain-hardened and partially annealed to half-hard temper.
-H26	Strain-hardened and partially annealed to three-quarters-hard temper.
-H28	Strain-hardened and partially annealed to full-hard temper.
-H3	Strain-hardened and then stabilized. Applies to products which are strain hardened and then stabilised by a low temperature heating to slightly lower their strength and increase ductility.
-H32	Strain-hardened and then stabilized. Final temper is one-quarter hard.
-H34	Strain-hardened and then stabilized. Final temper is one-half hard.
-H36	Strain-hardened and then stabilized. Final temper is three-quarters hard.
-H38	Strain-hardened and then stabilized Final temper is full-hard.
-H112	As fabricated; with specified mechanical property limits.
-F	For wrought alloys; as fabricated. No mechanical properties limit.

HEAT TREATABLE ALLOYS

Temper Desig-nation	Definition
-0	Annealed recrystallized applies to softest temper of wrought products.
-T1	Cooled from an elevated temperature shaping process (such as extrusion or casting) and naturally aged to a substantially stable condition.
-T2	Annealed (castings only). \
-T3	Solution heat-treated and cold-worked by the flattening or straightening operation.
-T36	Solution heat-treated and cold-worked by reduction of 6 percent.
-T4	Solution heat-treated.
-T42	Solution heat-treated by the user regardless of prior temper (applicable only to 2014 and 2024 alloys).
-T5	Artificially aged only (castings only).
-T6	Solution heat-treated and artificially aged.
-T62	Solution heat-treated and aged by user regard-less of prior temper (applicable only to 2014 and 2024 alloys).

© NIMI NOT TO BE REPUBLISHED

Temper Desig-nation	Definition
-T351 -T451 -T3510 -T3511 -T4510 -T4511	Solution heat-treated and stress relieved by stretching to produce a permanent set of 1 to 3 percent, depending on the product.
-T651 -T851 -T6510 -T8510 -T6511 -T8511	Solution heat-treated, stress relieved by stretching to produce a permanent set of 1 to 3 percent, and artificially aged.
-T652	Solution heat-treated, compressed to produce a permanent set and then artificially aged.

Temper Desig-nation	Definition
-T8	Solution heat-treated, cold-worked and then artificially aged.
-T/4	Solution heat-treated, cold-worked by the flattening or straightening operation, and then artificially aged.
-T86	Solution heat-treated, cold-worked by reduction of 6 percent, and then artificially aged.
-T9	Solution heat-treated, artificially aged and then cold-worked.
-T10	Cooled from an elevated temperature shaping process artificially aged and then cold-worked.
-F	For wrought alloys; as fabricated. No mechanical properties limit.

General heat treatment introduction

Heat treatment of metals and alloys is an operation which involves the heating and cooling of the metal in its solid state in order to obtain certain desirable characteristics or properties.

The general types of heat treatment are annealing, hardening and tempering.

Annealing

Annealing is a process involving the heating of a metal above the critical temperature and subsequent slow cooling. The purpose of such heating may be to remove stresses, to induce softness, to alter ductility, toughness, electrical, magnetic, or other physical properties; to refine crystalline structure, to remove gases, or to produce a definite microstructure. Some specific treatments which fall into this category are normalizing, tempering, and malleablizing.

Hardening

Alloys are hardened by heating them above their critical temperature and cooling them rapidly by plunging them into cold water, iced brine, or other liquid. When the metal is at its critical temperature, certain alloying elements are in fine solution within its structure. As it is rapidly cooled, or quenched, the elements are fixed in that fine solution, and the metal is hardened if the alloy is allowed to cool slowly, the alloying element "spreads out," which results in a softer final product.

Tempering

After a metal is hardened, it may be too brittle for ordinary purposes, therefore, some of the hardness should be removed and toughness induced. Tempering is the process of reheating hardened metal to a point below its critical temperature and cooling it at any rate required. The metal is heated according to the toughness desired. As the tempering temperature increases, toughness increases, and hardness decreases.

Aluminium alloys thermal treatment definitions (IS 5047 Part II)

As-Quenched Condition

The condition of an alloy during the time immediately following the quench and before the mechanical properties have been significantly raised by precipitation hardening (ageing).

Quenching

The rapid cooling a metal or alloy from the solution treatment temperature by contact with a solid, a liquid or a gas to retain the hardening constituents in solid solution. Quenching is often carried out by immersion in cold water.

Full Heat Treatment

Solution treatment followed by precipitation treatment.

Solution Treatment

Heating at a prescribed temperature followed by rapid cooling (quenching) as a prelude to natural ageing or precipitation heat treatment.

Precipitation Treatment (Artificial Ageing)

The controlled heating of solution heat treated material above room temperature for required duration in order to increase its hardness, proof stress and tensile strength.

Natural Ageing (Age Hardening)

The increase in hardness and tensile properties and reduction in ductility which occurs at room temperature after the solution treatment and quenching of most heat

© NIMI NOT TO BE REPUBLISHED

treatable alloys. The change in properties is substantially complete within four to five days.

Stabilizing

A low temperature treatment applied to cold worked aluminium-magnesium alloys to provide mechanical properties which will remain constant.

Recrystallisation (Recrystallisation Annealing)

The replacement of cold-worked metal grain by new strain-free grains, effected by heating metal to and holding at a suitable temperature.

Stress Relieving

Heating below the recrystallization temperature with the object of reducing internal stresses set up in a material as a result of previous operations.

Annealing

The softening of material by heating to and holding at a temperature sufficient to cause recrystallization.

Flash Annealing

Annealing involving rapid heating to the annealing temperature, with the primary object of ensuring fine grain size.

Super Annealing

The annealing of heat treatable alloys followed by a slow controlled rate of cooling to produce a condition of maximum ductility with a minimum tendency to natural ageing.

Partial Annealing (Temper Annealing)

The low temperature treatment of cold-worked material to effect limited softening without causing recrystallization. This treatment is used to obtain certain intermediate tempers.

Deferential Annealing

The heating of blanks so that the peripheral annulus or other specified parts only are annealed.

Age Softening

The loss of strength and hardness at room temperature which takes place in certain alloys due to spontaneous reduction of residual stresses in the strain hardened structure.

Strain Hardening, Work Hardening

The increase in strength and hardness with a general loss of ductility that results from cold working of a workpiece.

Heat treatment in aluminium alloys (Fig 1)

The major requirements of heat treatments in aluminium alloys is of strengthening them. Single-phase metals can be strengthened by solid solution hardening technique while ductile metals can be strain hardened.

However, the most widely used and effective method for aluminium alloys is precipitation hardening or age hardening.

Fig 1

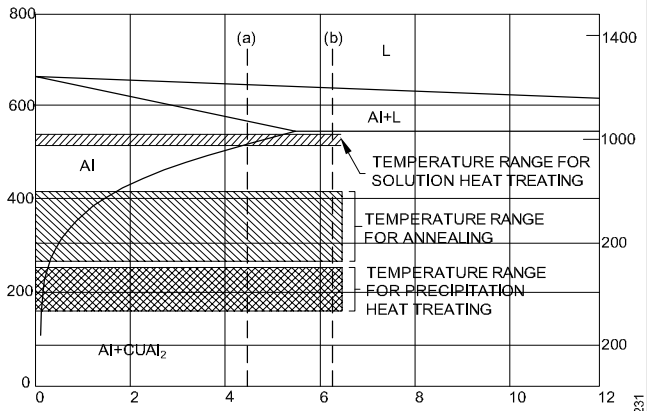

PORTION OF ALUMINIUM-COPPER BINARY PHASE DIAGRAM. TEMPERATURE RANGES FOR ANNEALING, PRECIPITATION HEAT TREATING, AND SOLUTION HEAT TREATING ARE INDICATED

AF20N247231

Portion of aluminium-copper binary phase diagram. Temperature ranges for annealing, precipitation heat treating, and solution heat treating are indicated

Annealing

Annealing is a process that reduces strength and hardness while increasing ductility, can also be used for both the non-heat-treatable and heat treatable grades of wrought.

If cold-worked aluminium alloys are heated to a sufficiently high temperature for a sufficiently long time.

Annealing process can be divided in 3 distinct parts: recovery, recrystallization, and grain growth.

During recovery, the internal stresses due to cold work are reduced, with some loss of strength and a recovery of some ductility.

During recrystallization, new undeformed nuclei form and grow until they impinge on each other to form a new recrystallized grain structure

Hardening Heat-Treatment Methods (Fig 2)

Fig 2

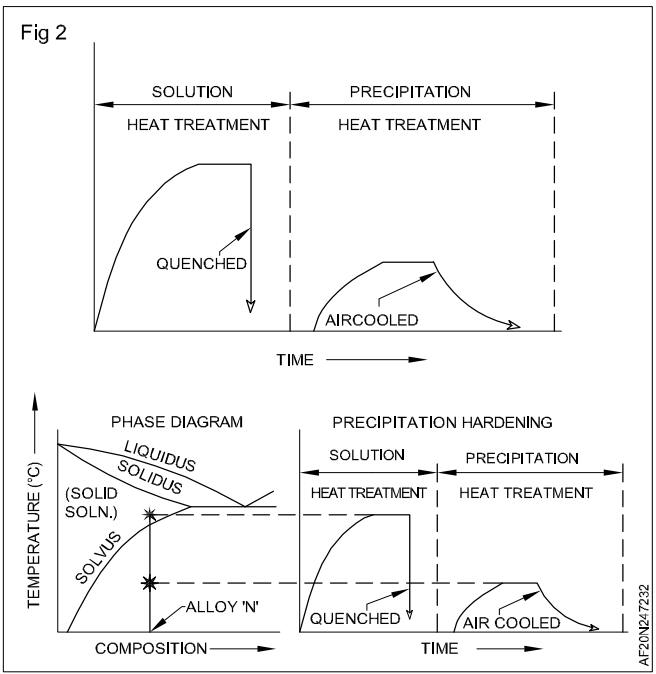

AF20N247232

NOT TO BE REPUBLISHED © NIMI

Two types of heat treatment are applicable to aluminum alloys, the solution treatment and the precipitation treatment.

Certain alloys develop their full strength from the solution treatment while others require both treatments for maximum strength.

Solution treatment

The solution treatment consists of heating the metal to the temperature required to cause the constituents to go into solid solution, holding or soaking the parts at this temperature for a sufficient time to complete the solution, followed by rapid quenching in cold water to retain the condition. The time of transfer from the furnace to the quench tank must not exceed seven seconds.

Precipitation treatment

The precipitation treatment consists of aging the parts previously subjected to the solution treatment at a definite temperature for a considerable time. During the aging period a portion of the alloying constituents precipitate out in the form of extremely fine particles, greatly increasing the strength of the alloy.

Aging Time and Temperature

Precipitation (age) hardening consists of aging material previously subjected to solution heat treatment. This is done naturally at room temperature or artificially.

Artificial aging is accomplished by heating aluminum alloy to a specific temperature and holding it for a specified period of time. During this operation, the alloying agents in solid solution precipitate out. As this progress, the strength of the material increases until the maximum is reached. The increase in strength is due to the uniform alignment or formation of the molecule structure. Aging beyond the maximum point causes the strength to decline until a stable condition is reached. This over-aging is usually done to increase an alloy's resistance to corrosion, especially alloys with high copper content.

Tables 1, 2 and 3 shows aging times, temperatures, and conditions by series.

Heat-Treating Procedures

Temperature and quenching will be kept within close limits when heat treating aluminium alloys. Following are general practices for heat-treatment of these alloys.

Temperature

The temperature for solution heat-treating is usually chosen as high as possible without exceeding the melting point of any element in the alloy. The temperature selected must put all of the soluble elements into solid solution.

Tables 1, 2 and 3 shows heat-treating temperatures for aluminium alloys by series.

Heating time / Soaking time

It increases with the thickness of the part to be treated. Solution heat treatment should be kept to the minimum time required to obtain the desired physical results. With clad materials, prolonged heating may defeat the purpose of the cladding by excessive diffusion of copper and other soluble elements into the cladding.

Table 4 contains the recommended approximate soaking times for various alloys. The time at temperature (soaking time) is measured from the time the metal reaches the minimum limit of the temperature range. In the case of thick material, the controlling factor would be when the center (core) reached the minimum temperature.

The soaking period will vary from 10 minutes for thin sheet to approximately 12 hours for the thicker materials, such as heavy forgings.

A general guide to use is approximately one hour for each inch of cross-sectional thickness.

Quenching

The basic purpose for quenching is to prevent the immediate reprecipitation of the soluble elements after they are in a solid solution. Rapid quenching is required to obtain the best physical properties.

The recommended time interval between removal from the heat and immersion is 7 seconds or less. Refer to Table 4 for specific quench delay times. Allowing the metal to cool before quenching promotes the danger of intergranular corrosion and slightly affects the hardness.

This is caused by reprecipitation along the grain boundaries

NOT TO BE REPUBLISHED © NIMI

Table 1 - Typical solution and precipitation heat treatments for aluminium alloys with copper

Alloy	Product form	Solution heat treatment		Precipitation heat treatment		
		Temperature °C	Temper designation	Temperature °C	Time(c), h	Temper designation
Al-Cu alloys without magnesium alloying						
2011	Rolled or cold finished rod and bar	525	T3	160	14	T8
			T4	...	...	...
			T451	...	...	...
2219	Flat sheet	535	T31	175	18	T81
			T37	165	24	T87
			T42	190	36	T62
	Plate	535	T31	175	18	T81
			T37	175	18	T87
			T351	175	18	T851
			T42	190	36	T62
	Rolled or cold finished wire, rod, and bar	535	T351	190	18	T851
2219	Extruded rod, bar, shapes, and tube	535	T31	190	18	T81
			T3510	190	18	T8510
			T3511	190	18	T8511
			T42	190	36	T62
		535	T4	190	26	T6
		535	T4	190	26	T6
			T352	175	18	T852
Al-Cu-Mg alloys						
2024	Flat sheet	495	T3	190	12	T81
			T361	190	8	T861
			T42	190	9	T62
				190	16	T72
2024	Coiled sheet	495	T4	...	...	...
			T42	190	9	T62
				190	16	T72
	Plate	495	T351	190	12	T851
			T361	190	8	T861
			T42	190	9	T62
	Rolled or cold finished wire, rod, and bar	495	T4	190	12	T6
			T351	190	12	T851
			T36	190	8	T86
			T42	190	16	T62
	Extruded rod, bar, shapes, and tube	495	T3	190	12	T81
			T3510	190	12	T8510
			T3511	190	12	T8511
			T42	190	16	T62
	Drawn tube	495	T3	...	...	...
			T42	...	...	...
2036	Sheet	500	T4	...	...	...
2038	Sheet	540	T4	205	2	T6
Al-Cu-Mg-Si alloys						
2008	Sheet	510	T4	205	1	T62
2014	Flat sheet	500	T3	160	18	T62
			T42	160	18	T6
	Coiled sheet	500	T4	160	18	T6
			T42	160	18	T62
	Plate	500	T42	160	18	T62
			T451	160	18	T651
	Rolled or cold finished wire, rod, and bar	500	T4	160	18	T6
			T42	160	18	T62
			T451	160	18	T651
	Extruded rod, bar, shapes, and tube	500	T4	160	18	T6
			T42	160	18	T62
			T4510	160	18	T6510
	Drawn tube	500	T4	160	18	T6
			T42	160	18	T62
2017	Rolled or cold finished wire, rod, and bar	500	T4	...	...	...
			T42	...	...	...
2117	Rolled or cold finished wire and rod	500	T4	...	...	...
			T42	...	...	...
Al-Cu-Li alloys						
2090	Sheet	540	T3	165	24	T83
2091	Sheet	530	T3	120	24	T84
	Extruded bar	530	T3	190	12	Peak aged
8090	Extruded bar	530	T3	190	12	Peak aged

© NIMI NOT TO BE REPUBLISHED

Table 2 - Typical solution and precipitation heat treatments for Mg-Si aluminium alloys (6xxx)

Alloy	Product form	Solution heat treatment		Precipitation heat treatment		
		Temperature °C	Temper designation	Temperature °C	Time(c), h	Temper designation
6005	Extruded rod, bar, shapes, and tube	530	T1	175	8	T5
6009(e)	Sheet	555	T4	205	1	T6
6010	Sheet	565	T4	205	1	T6
6053	Die forgings	520	T4	170	10	T6
6061(f)	Sheet	530	T4	160	18	T6
			T42	160	18	T62
	Plate	530	T4	160	18	T6
			T42	160	18	T62
			T451	160	18	T651
	Rolled or cold finished wire, rod, and bar	530	T4	160	18	T6
	bar			160	18	T89
				160	18	T93
				160	18	T913
				160	18	T94
			T42	160	18	T62
			T451(	160	18	T651
	Extruded rod, bar, shapes, and tube	530	T4	175	8	T6
			T451(	175	8	T6510
			T451	175	8	T6511
		530	T42	175	8	T62
6061(f)	Drawn tube	530	T4	160	18	T6
			T42	160	18	T62
	Die and hand forgings	530	T4	175	8	T6
	Rolled rings	530	T4	175	8	T6
			T452(	175	8	T652
6063	Extruded rod, bar, shapes, and tube		T1	205	1	T5
		520	T4	175	8	T6
	bar	520	T42	175	8	T62
	Drawn tube	520	T4	175	8	T6
				175	8	T83
				175	8	T831
				175	8	T832
			T42	175	8	T62
6013(o)	Sheet	570	W(p)	190	4	T6
	Plate	570	W(p)	190	4	T651
6066	Extruded rod, bar, shapes, and tube	530	T4	175	8	T6
			T42	175	8	T62
			T451(	175	8	T6510
			T451	175	8	T6511
	Drawn tube	530	T4	175	8	T6
			T42	175	8	T62
	Die forgings	530	T4	175	8	T6
6070	Extruded rod, bar, shapes, and tube	545	T4	160	18	T6
			T42	160	18	T62
6111	Sheet	560	T4	175	8	T6
6151	Die forgings	515	T4	170	10	T6
	Rolled rings	515	T4	170	10	T6
	bar		T452(	170	10	T652
6262	Rolled or cold finished wire, rod, and bar	540	T4	170	8	T6
				170	12	T9
			T451	170	8	T651
			T42	170	8	T62
6262	Extruded rod, bar, shapes, and tube	540	T4	175	12	T6
	bar		T451(	175	12	T6510
		540	T42	175	12	T62
	Drawn tube	540	T4	170	8	T6
				170	8	T9
			T42	170	8	T62
6463	Extruded rod, bar, shapes, and tube		T1	205	1	T5
		520	T4	175	8	T6
		520	T42	175	8	T62
6951	Sheet	530	T4	160	18	T6
			T42	160	18	T62

© NIMI NOT TO BE REPUBLISHED

Table 3 - Typical solution and precipitation heat treatments for Zn-Mg aluminium alloys (7xxx)

Alloy	Product form	Solution heat treatment		Precipitation heat treatment		
		Temperature °C	Temper designation	Temperature °C	Time(c), h	Temper designation
7001	Extruded rod, bar, shapes, and tube	465	W	120	24	T6
				120	24	T62
			W510	120	24	T6510
			W511	120	24	T6511
7005	Extruded rod, bar, and shapes	. . .	. . .	. . .	. . .	T53
7050	Plate	475	W51			T7651
						T7451
	Extrusions	475	W510			T76510
			W511			T76511
	Die and hand forgings	475	W			T74
			W52			T7452
7075(i)	Sheet	480	W	120	24	T6
				120	24	T62
						T76
						T73
	Plate	480	W	120	24	T62
			W51			T7351
				120	24	T651
						T7651
7075(i)	Rolled or cold finished wire, rod, and bar	490	W	120	24	T6
				120	24	T62
						T73
			W51	120	24	T651
						T7351
	Extruded rod, bar, shapes, and tube	465	W	120	24	T6
				120	24	T62
						T73
						T76
			W510	120	24	T6510
						T73510
						T76510
			W511	120(l)	24	T6511
						T73511
						T76511
	Drawn tube	465	W	120	24	T6
				120	24	T62
						T73
	Die forgings	470(m)	W	120	24	T6
						T73
			W52			T7352
	Hand forgings	470(m)	W	120	24	T6
						T73
			W52	120	24	T652
						T7352
	Rolled rings	470	W	120	24	T6
7175	Die forgings	(o)	W			T66
		(o)	W			T74
		(o)	W52			T7452
	Hand forgings	(o)	W			T74
		(o)	W52			T7452
7475	Sheet	515(p)	W	120	3	
				plus 155	3	T61
						T761
	Plate	510(p)	W51	120	24	T651
						T7651
						T7351
Alclad 7475	Sheet	495	W	120	3	
				plus 155	3	T61
						T761

© NIMI NOT TO BE REPUBLISHED

Table 4 - Soaking times and maximum quench delay for solution treatment of wrought aluminium alloys

Thickness(a), mm (in.)	Soak time, minutes		Maximum quench delay, s
	min	max	
≤0.41 (0.016)	20	25	5
0.51 (0.020)	20	30	7
0.64 (0.025)	25	35	7
0.81 (0.032)	25	35	7
1.02 (0.040)	30	40	10
1.27 (0.050)	30	40	10
1.35 (0.053)	30	40	10
1.80 (0.071)	35	45	10
2.03 (0.080)	35	45	10
2.29 (0.090)	35	45	10
2.54 (0.100)	40	55	15
3.18 (0.125)	40	55	15
4.06 (0.160)	50	60	15
4.57 (0.180)	50	60	15
6.35 (0.250)	55	65	15
>6.35 (0.250)–12.7 (0.500)	65	75	15
For each additional 12.7	+30	+30	15
Rivets (all)	60	. . .	5

© NIMI
NOT TO BE REPUBLISHED

PR sealant types, uses storage

Objectives: At the end of this lesson you shall be able to
- **how to select air craft sealant**
- **state the classification of sealant**
- **how to remove sealant.**

Introduction to Aircraft Sealant.

When you strip away the outer layer of an aircraft, one thing you will be sure to find is sealant. During the manufacture and assembly of an aircraft, various sealants are used to protect key areas and components from con-osion, as well as exposure to high temperatures and chemicals such as hydraulic fluids and jet oils.

How do you select the right aircraft sealant?

Aircraft sealants have different properties depending on the area of application they are designed for.

- Fuel Tank Sealants
- Fuselage Sealants
- Access Door Sealants
- Window & Canopy Sealants
- Firewall Sealants

Each sealant is also different in the way it cures. Recent regulatory changes in the European Union has seen the phasing out of dichromate cured applications, with most manufacturers now opting to pursue manganese dioxide cured solutions that are reach approved and safer for the user.

More often than not, sealant selection is driven by OEM specification. Major manufacturers such as Boeing, Airbus and Embraer have an approved list of sealants for each application based on rigorous testing, so it is important to ensure that the sealant choice you are making can-ies the correct approvals.

How do you apply aircraft sealant?

While selecting the right sealant is the first step, additional decisions need to be made that will affect the application of the sealant itself.

Sealant Class

Sealants can generally be classified into 3 classes - A, B and C - although an S class does apply in some cases where a sealant can be sprayed.

Class A - Brush application, generally used on fasteners

Class B - Thicker consistency, used for fillet and injection seals

Class C - Thinner than Class 8, used for fay sealing

Fig 1

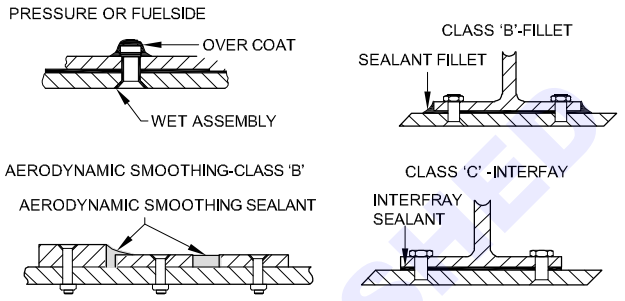

Application Time

Different application times are important as the nature of the work being carried out will vary depending on application. Where there is a large surface to be covered, a longer application time is necessary to ensure that the first product applied does not cure before the application work has been completed. Shorter application times are essential for time critical work, where the seal needs to be almost immediate.

Packaging Type

The packaging type will generally be concerned with two variables - volume of product required and the mixing process being used. Small volumes, for applications in multiple areas or by multiple users, are packaged into cartridge systems referred to as Techkits (manufactured by Techcon and generally used by 3M and Naftoseal) or Semkits (manufactured by Semco and used by PPG). These contain both the base and accelerator in one pack, and are mixed (either by hand or with the use of a mixing machine) using a piston rod sold as part of the kit.

For larger applications, or where a different mixing process is used, these products are supplied in separate tins (base and accelerator separate). These require closer attention to mixing ratios, as well as other application equipment including mixing sticks and dishes to hold the material).

Understanding Product Descriptions

PPG PR1440 B-1/2 150ml Semkit

3M AC-350 B-2 1USQ Kit

Naftoseal MC-650 Class B-1130ml Techkit-130

Brand -The manufacturer who makes the specific sealant.

Product Number - This is the manufacturer's name for the specific sealant product being used.

NOT TO BE REPUBLISHED

Class - This denotes the consistency of the product, and therefore the specific applications it should be used for.

Application Time - The length of time that the sealant is workable before curmg.

Size - The volume of product contained in each pack

Package Type -the type of packaging will determine the potential applications and mixing required

How do you remove aircraft sealant?

In MRO applications, cured sealant may need to be removed to allow access to all areas of the aircraft. Similarly, during manufacture, assembly and resealing applications, uncured or semi-cured sealants may need to be cleaned prior to releasing the part.

There are a number of accessories suited to the specific removal of aircraft sealant from Socomore and PPG Semco.

Curing

PPG said it began qualification and shop trials for a family of aerospace sealants that are cured on demand using UV light, allowing for substantial reductions in process time, waste and costs while increasing efficiency.

Based on PPG PERMAPOL polymer technology and known in the industry as sealants cured on demand (SCOD), these proprietary sealants cure in seconds with the simple application of UV light, rather than hours or even days required for traditional-cure products. These new sealants are fuel-resistant, offer low shrinkage, are highly flexible and exhibit excellent physical properties.

PPG SCOD products are undergoing evaluation for qualification to the new SAE Aerospace Material Specification (AMS) 3102 written for UV-cured sealants. Several aircraft manufacturers have begun or will soon begin the evaluation and approval process for these products.

Modem commercial transport and military aircraft use a wide variety of sealants for numerous applications, including coating the wing's integral fuel tanks for fuel containment, sealing fuselage joints for pressurization, filling depressions in the exterior aircraft structure to achieve a smooth surface and providing c01Tosion-protection qualities.

Traditionally, these sealants are supplied as,chemically cured, two-component materials that can take hours to cure once applied. While this curing process takes place, many assembly operations in the area must be suspended to not disturb the uncured sealant, often limiting production rates and flight-line maintenance. Mixed sealants also have a limited working time in which to be applied, leading to expired sealant being discarded and money wasted. PPG's new family of UV-cured aerospace sealants can help solve these challenges.

Cleaning of Equipment

1 Immediately after use or before the sealant cures, wash equipment and tools with a solvent.

2 For inaccessible areas (such as interior surfaces of extrusion guns), commercially available integral fuel tank stripping compound should be used to remove cured sealant.

Health and Safety Precaution: 3M™ Aerospace Sealant AC-645 B-2 is safe to use and apply when recommended precautions are followed. Before using this product, read and understand the Material Safety Data Sheet (MSDS), which provides information on health, physical and environmental hazards, handling precautions and first aid recommendations. An MSDS is available on request

Storage: The shelf life of 3M™ Aerospace Sealant AC-645 8-2 is 9 months from date of packaging, when stored at temperatures below 80°F in its original

container. Storage at lower temperatures increases shelf life. Mixed 3M AC-645 B-2 Sealant may be stored under refrigeration as follows: 15 days at -l 0°F 30 days at -40°F It is important to remember that freezing, storing and thawing procedures reduce application life. Also, frozen storage will reduce application life by varying amounts depending on the storage temperature and length of storage time. All aspects of storage, freezing and thawing should be planned carefully and it is not recommended to mix and freeze with less than 1/2 hour of available application time.

NOT TO BE REPUBLISHED © NIMI

Corrosion reworking

Objectives: At the end of this lesson you shall be able to
- **state the equipment use for corrosion removal**
- **Know how to use tools and equipment.**

Non-powered corrosion removal equipment

Scrapers

Scrapers are used primarily for the initial removal of heavy corrosion deposits in corners and crevices that cannot be reached with other equipment.

Scrapers of this kind may be home-made manufactured from plastic, fiberglass, aluminium, etc.

Plastic scrapers may be used on any metal surfaces

Abrasive Mats

Abrasive mats are nylon webs containing various grades of aluminium oxide abrasive material.

These mats are used by hand or with mandrels to remove small areas of corrosion and/or paint where the use of powered tools would be impractical or prevented by the shape or accessibility of the area.

Table 1: Abrasive mats grades

Grade	Coated Abrasive Equivalent
Extra coarse	80 - 100
Coarse	100 - 120
Medium	120 - 150
Fine	180 - 220
Very Fine	280 - 320
Super Fine	320 - 400
Ultra Fine	400 - 500
Flint	500 - 600

Abrasive Cloth and abrasive paper

Aluminum oxide and silicon carbide grit bonded to cloth or heavy paper are used for wet or dry sanding of light to moderate corrosion products.

The abrasive cloth is available in sheets and rolls in 240 grit (Fine) and 320 grit (Very Fine) grades.

The abrasive paper is available in sheets in 240 grit (Fine) and 320 grit (Very Fine) grades.

Use of aluminium oxide is prohibited on composite surfaces.

Metallic Wools

Metallic wool is an abrasive material used for removing corrosion that is not tightly bonded to a metal surface. The four major types of metallic wools are aluminium, copper, stainless steel, and steel.

Metallic wools are available in five grades, ranging from very fine to extra coarse.

These materials are very good for corrosion removal on tubing or extruded parts.

The type of corroded metal must be known before using metallic wool. Steel wool is used on ferrous metals; aluminum wool is used on aluminum, aluminum alloys, magnesium, and magnesium alloys; copper wool is used on copper alloys, bronze, and brass; and, stainless steel wool is used on stainless steel.

Wire Brushes

Wire brushes are used to remove heavy corrosion deposits or paint that is not tightly bonded to the metal surface. They are available with aluminum, steel, stainless steel, or brass bristles.

The brushes must be compatible with the metal surface to prevent galvanic corrosion. Stainless steel can be considered to be neutral and can be used on all aviation equipment.

Do not use a wire gage or diameter above 0.25 mm (0.010 inch), as gouging of the surface may occur.

Remove the corrosion with a linear motion; do not cross-hatch.

After wire brushing soft metal (such as aluminum or magnesium) the surface areas must be polished with fine abrasive paper.

Powered corrosion removal equipment

Power tools are used to remove heavy corrosion from metal surfaces, or mild to severe corrosion over large surface areas.

Powered tools are an aggressive method.

CAUTION

Care must be exercised when using power tools.

Application of excessive pressure can easily damage metal surfaces and cause internal metallurgical changes in the metal due to excessive heat buildup.

© NIMI NOT TO BE REPUBLISHED

WARNING

Product can break apart during use and cause injury if damaged or run too fast.

Always wear approved and appropriate eyes, face, ear, hands and body protections.

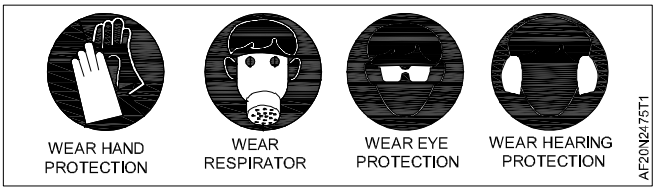

Radial Bristle discs (Fig 1)

Disc Bristle disc technology has been proven to be effective and less aggressive than abrasive wheels and brushes and is intended for small corrosion repairs and paint removal.

Fig 1

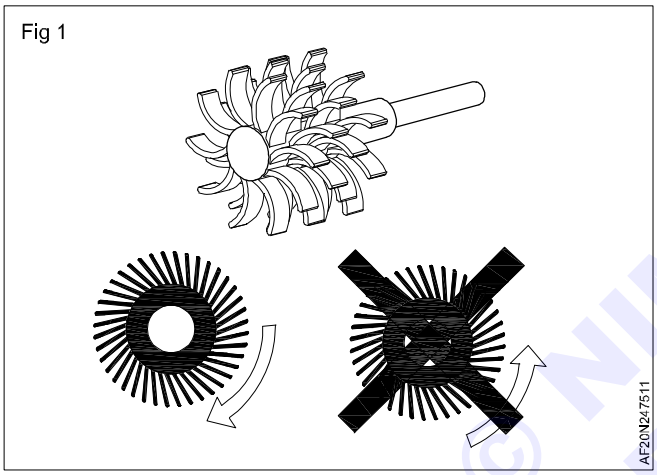

Abrasive Flap Wheels (Fig 2)

Flap wheels are made of nylon paper impregnated with aluminium oxide abrasives.

Depending on grit size, the flap wheels can be used to remove medium to severe corrosion from thick materials. The wheels will also remove metal. Thus, caution must be used to minimize the amount of metal removal. For the most effective use of this equipment, use the specified RPM.

Fig 2

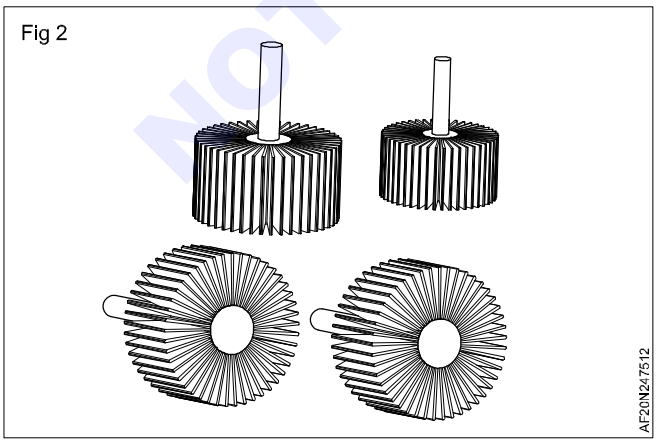

Sanding discs (Fig 3)

Abrasive are made of nylon paper impregnated with aluminium oxide abrasives.

Two types of disc attachment are available:

- Screwed,
- Quarter turn.

Fig 3

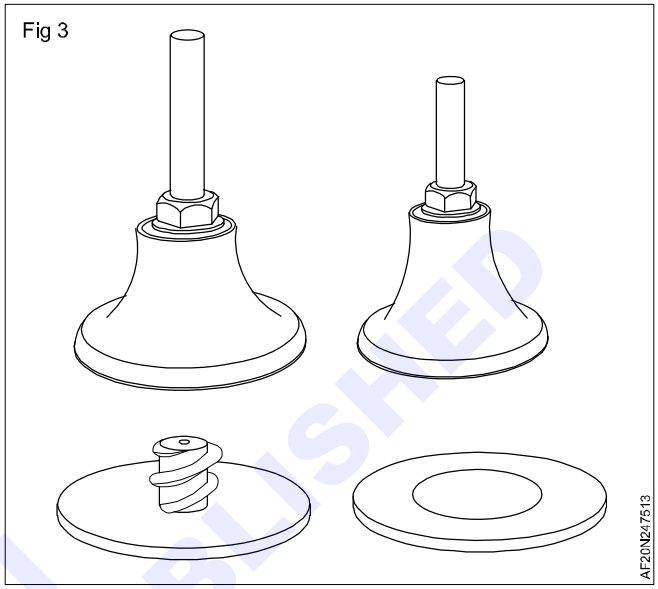

Keep the sanding disc tilted to approximately a 10 degrees angle so that only one side of the disc is in contact with the metal surface.

For the most effective use of this equipment, use the specified RPM.

Corrosion removal accessories, such as bristle discs, flap brushes, etc., shall only be used on one type of metal. For example, a flap brush used to remove aluminium shall not be used to remove magnesium or steel.

Powered corrosion tools use

Pneumatic Drill Motors

Pneumatic drill motors are the preferred power tools for removing heavy corrosion or reworking large surface areas.

The drill motor is normally used with wire brush wheels, rotary files, flap brushes, sanding pads, abrasive wheels, etc.

Insert the tool shank and tighten chuck securely with the chuck key prior to use.

Angle pneumatic grinder

Used of pneumatic drill motors

To prevent the abrasive wheel or sanding disc from digging into the metal, keep the tool off the metal when initially starting the drill. When the abrading stroke is finished, lift the tool from the metal before releasing the power to the motor.

© NIMI NOT TO BE REPUBLISHED

Fig 4

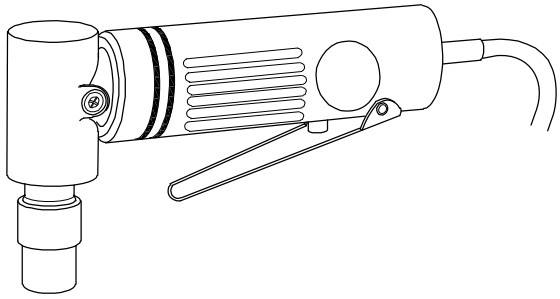

ANGLE PNEUMATIC GRINDER

AF20N247514

Holding the drill motor with both hands, apply moderate pressure while holding the rotary file, sanding disc, or abrasive wheel against the work.

When using the pneumatic tool, be sure to check the size and type of the abrasive disc. Ensure that the type of disc is compatible with the metal.

Keep the sanding disc tilted to approximately a 10 degrees angle so that only one side of the disc is in contact with the metal surface. If the entire disc surface is in contact with the surface, a bucking effect will occur. Excessive pressure will cause a chattering effect.

Move the tool over the surface with slightly overlapping strokes.

Do not grind, sand, or file in one area for any length of time without stopping and allowing the metal to cool. Excessive heating of the metal will alter its metallurgical structure.

Pneumatic Sanders

The proper technique for using pneumatic sanders with oscillating heads shall include the following:

To prevent the sander from digging into the metal, start the sander before it touches the metal. When the sanding strokes are finished, lift the sander from the metal before releasing the power to the motor.

Do not lay the unit down with the motor running.

For best results, apply moderate pressure while holding the sander against the work. Move the sander over the surface with parallel and slightly overlapping strokes.

Move it as slowly as possible without overheating the metal. Excessive heating of the metal will alter its metallurgical structure.

© NIMI NOT TO BE REPUBLISHED

Non-Destructive Testing (NDT)

Objectives: At the end of this lesson you shall be able to
- **state the main NDT methods used in aircraft parts inspection**
- **state the tools for visual inspection**
- **Know how work the liquid penetrant inspection**
- **Know how work the ultrasonic inspection.**

The common factor, in all the inspection/test procedures is that they entail techniques that do not affect the continued serviceability of the components under inspection.

Non-destructive testing (NDT) (in America, Non-Destructive Inspection, NDI) techniques, involve the use of such methods as:

- Visual inspection method
- Liquid Penetrant Inspection
- Ultrasonic inspection Method
- Etc.

Visual Inspection Method

To assist in visual inspections, use is frequently made of such aids as:

- Inspection Mirrors.
- Magnifier or Magnifying Glasses.
- Remote Viewing Instruments.

Inspection mirrors (Fig 1) enable the operator to see the remote surface of components and into places that normal vision is restricted. Selections of inspection mirrors are available, mounted on the end of a handle or rod. Such mirrors should be mounted by means of a universal joint so that they can be positioned at various angles.

Fig 1

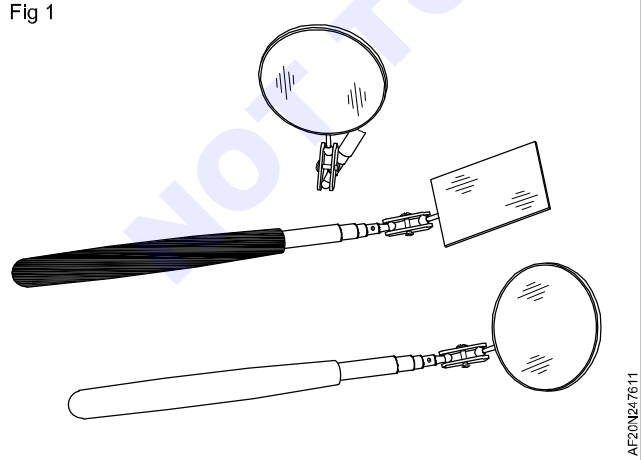

Magnifier or Magnifying glasses (Fig 2) are most useful instruments, to assist with the close inspection of an airframe. They are capable of clarifying details, when normal visual inspection only produces a suspicion of a crack or corrosion.

Fig 2

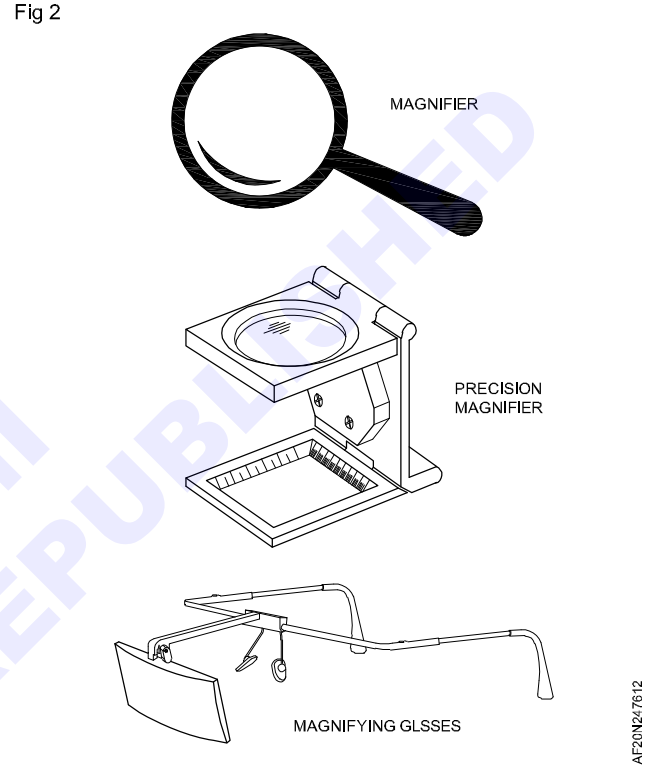

Remote viewing instruments (Fig 3) have a variety of different names, although they all, basically, operate on similar principles. Whether they are called borescopes or fibrescopes, they are optical instruments used for the inspection of the remote areas of structures, components or engines, which would be, otherwise, not directly viewable.

Borescopes consist of rigid tube of nickel-plated brass or of stainless steel.

Inside the thin metal tube is a complex series of precision optical lenses and mirrors, surrounded by a bundle of very fine glass fibre filaments, which guide light to the viewing end of the tube.

Rigid borescopes are provided with several versions of viewing ends, which allow either a forward view, a lateral view (normal to the longitudinal axis of the tube), a forward oblique or a reverse view of the inspection area.

NOT TO BE REPUBLISHED © NIMI

Fig 3

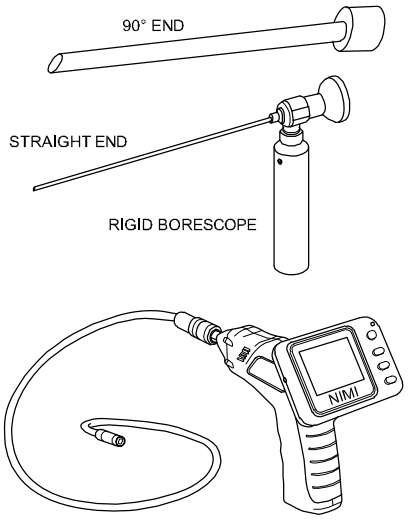

Fibrescopes are flexible and, probably because of this, they are extremely prone to abuse and damage. As the name implies, they rely on fibre optic cables rather than a rigid tube and lenses/mirrors to provide the image of the inspection area.

Diameters and lengths of fibrescopes are similar to those of rigid borescopes and they are also provided with the various viewing ends and focussing arrangements.

The images, presented by borescopes and fibrescopes, may be viewed directly through an eyepiece, as stated, or they may be displayed on a TV screen via a video camera, which can be attached to the eyepiece.

Liquid Penetrant Inspection

Penetrant inspection is a method used to detect surface-breaking discontinuities (cracks, pits, etc.) in non-porous materials.

This method utilizes a dye containing fluid which penetrates surface discontinuities through capillary action. The trapped penetrant increases the visibility of the discontinuity by providing a visual contrast between the discontinuity and the surrounding surface.

Process

The following provides a simplified description of the fundamental penetrant process steps (Fig 4).

CLEANING

Cleaning is performed to remove residues and soils from the part surface.

Cleaning is a critical part of the penetrant process. Contaminants, soils, or moisture, either inside the flaw or on the part surface at the flaw opening, can reduce the effectiveness of the inspection.

PENETRANT APPLICATION

After cleaning is complete and the part is thoroughly dry, a penetrating liquid containing dye is applied to the surface of a clean part to be inspected.

Fig 4

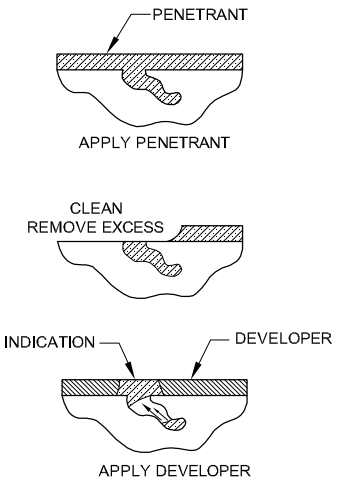

The penetrant is allowed to remain on the part surface for a period of time to allow it to enter and fill any surface breaking openings or discontinuities.

PENETRANT REMOVING

After a suitable period, the penetrant is removed from the part surface. Care shall be exercised to prevent removal of penetrant contained in discontinuities.

DEVELOPPER APPLICATION

A material called a developer is then applied. The developer aids in drawing any trapped penetrant from discontinuities and improves the visibility of indications.

VISUAL EXAMINATION

Following developer application, the next step is a visual examination under appropriate lighting conditions to identify relevant indications.

CLEANING

The final step is a post-cleaning of the part.

This step is very important as penetrant residues can have several adverse effects on subsequent processing and service

Ultrasonic Inspection

The term ultrasonic pertains to sound waves having a frequency greater than 20,000 Hz. For most ultrasonic non-destructive inspection, the ultrasound will be generated by a device called a transducer.

Ultrasonic uses sound to detect internal discontinuities ranging from cracks to delamination.

This method may be used to detect sub-surface defects in the majority of solid materials.

Ultrasonic can also be used to:

- Measure the thickness of materials when it is only possible to get access to one side of the component
- Test for the delamination (de-bonding) of composite structures

© NIMI NOT TO BE REPUBLISHED

Fig 5

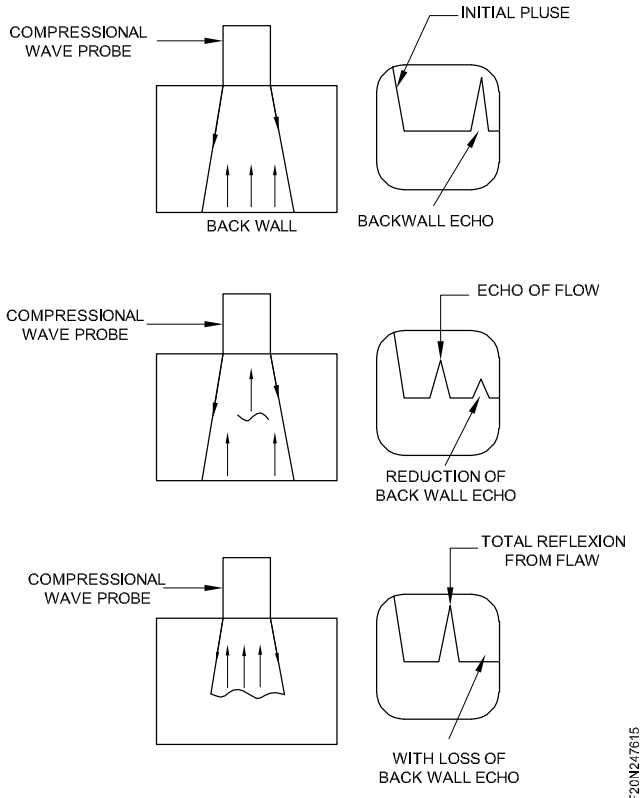

In a similar manner to radar waves in air (and sonar waves in water) the sound waves travel through the material until they meet an interface with a medium which has a different acoustic impedance. The acoustic impedance of a material is a function of the density of the material.

At the interface of different acoustic impedances, the sound will be reflected in proportion to their differences.

Tap testing

Tap testing is used for a evaluation of any accessible aircraft surface to detect the presence of delamination or debonding on composites components.

Fig 6

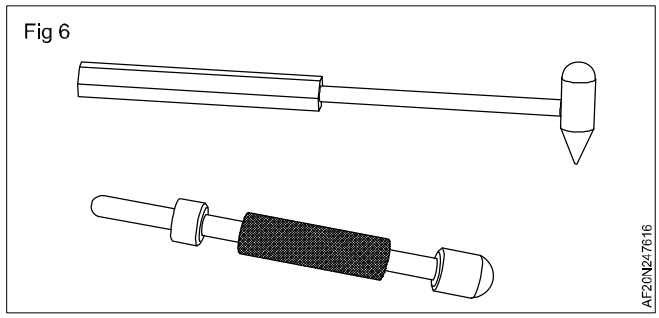

The tap testing consists of lightly tapping the surface of the component with a coin, light special hammer or any other suitable object. (Fig 6)

The acoustic response is compared with that of a known good area.

The surface should be dry and free of oil, grease, and dirt.

Tap testing is limited to finding relatively shallow defects in thin skins. Thicker laminates need more in-depth NDT methods, such as ultrasonic inspection.

The accuracy of this test depends on the inspector's subjective interpretation of the test response

A special automatic tap inspection tool named "Woodpecker" can be used on quality floor or to record test (Fig 7).

Fig 7

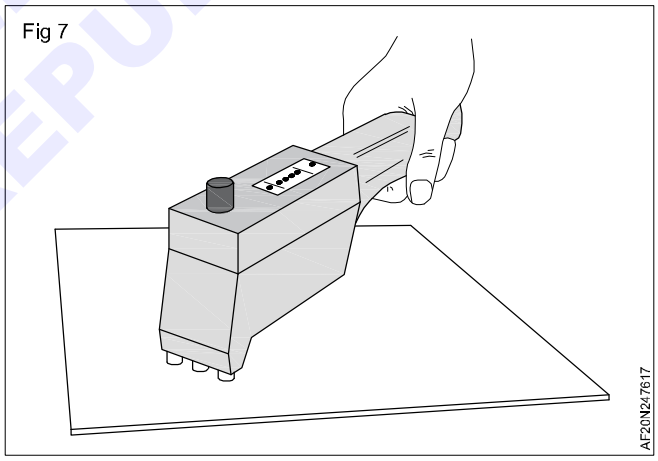

© NIMI NOT TO BE REPUBLISHED

Flight controls chain

Objectives: At the end of this lesson you shall be able to
- **Understand the flight control linkage**
- **Understand the principle of flight control system.**

Flight Control Linkage Systems (Fig 1)

The pilot's manual inputs to the flight controls are made by moving the cockpit control column (or control stick) or/and rudder pedals in accordance with the universal convention.

- Pitch control is exercised by moving the control stick forward and after. Pushing the control stick forward causes the aircraft to pitch down and pulling the stick after results in a pitch up.
- Roll control is achieved by moving the control stick from side to side or rotating the control yoke. Pushing the stick to the right drops the right wing and vice versa.
- Yaw is controlled by the rudder pedals. Pushing the left pedal will yaw the aircraft to the left while pushing the right pedal will have the reverse effect.

Fig 1

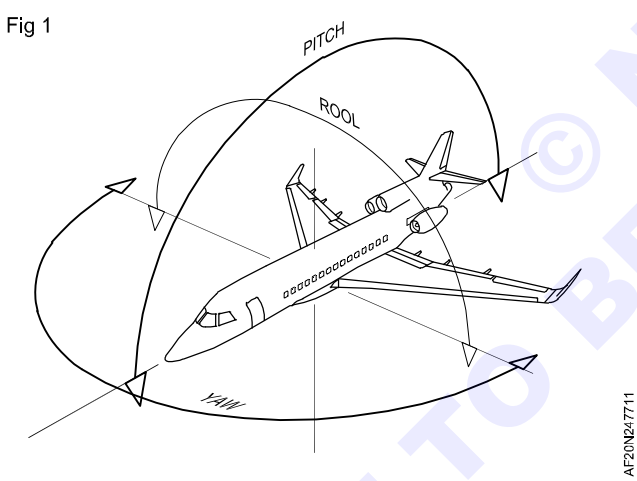

There are presently two main methods of connecting the pilot's controls to the rest of the flight control system.

These are

- Push-pull control rod systems
- Cable and pulley systems

Push-Pull Control Rod System (Fig 2)

A stiff rod or hollow tube in an aircraft control system that moves a control surface by either pushing it or pulling it.

Fig 2

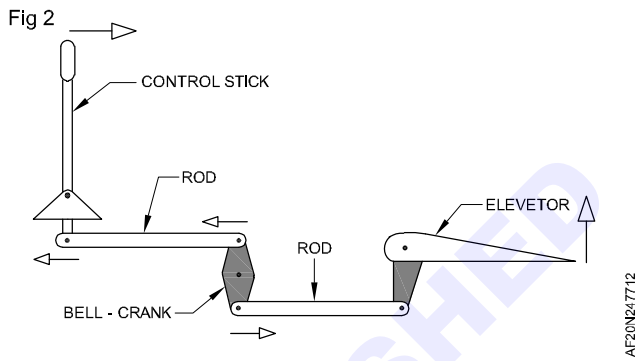

Cable and Pulley System (Fig 3)

The cable and pulley system is widely used for commercial aircraft sometimes used in conjunction with push-pull control rods.

Fig 3

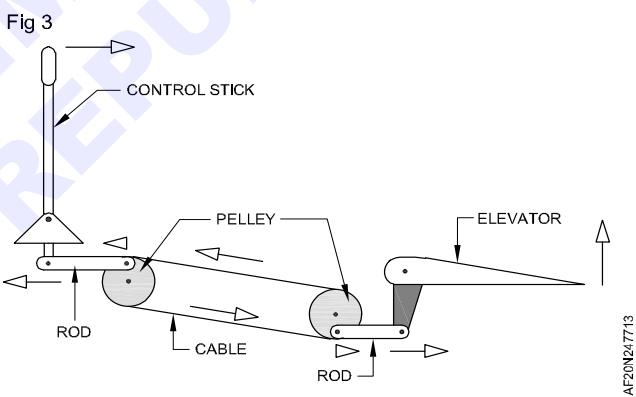

Flight Control Actuation

The key element in the flight control system, increasingly so with the advent of fly-by-wire and active control units, is the power actuation.

Addressing actuation in ascending order of complexity leads to the following categories:

- Simple mechanical actuation, hydraulically powered
- Mechanical actuation with simple electromechanical features
- Multiple redundant electromechanical actuation with analogue control inputs and feedback

Simple Mechanical/Hydraulic Actuation (Fig 4)

The conventional linear actuator used in powered flight controls would be of the type show in Figure below.

NIMI © NOT TO BE REPUBLISHED

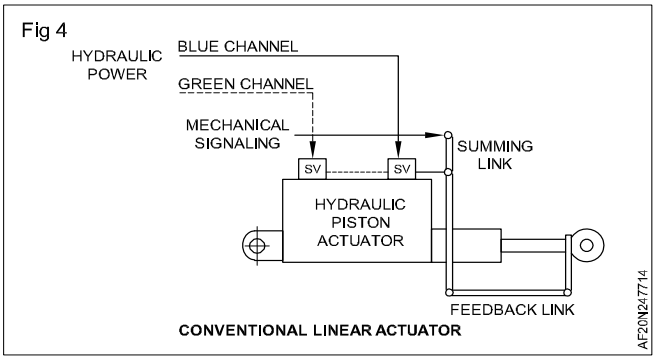

Mechanical Actuation with Electrical Signalling (Fig 5)

The use of mechanical actuation has already been described and is appropriate for a wide range of applications. However, the majority of modern aircraft use electrical signalling and hydraulically powered actuators for a wide range of applications.

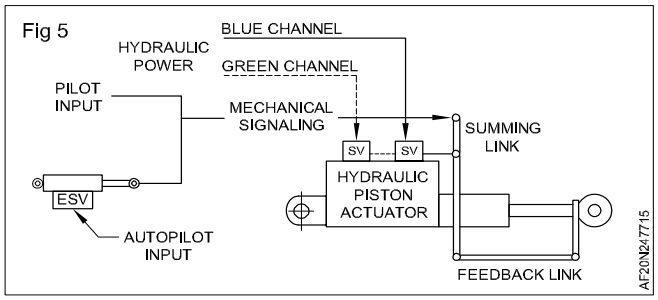

Basic components - Control rods

Objective: At the end of this lesson you shall be able to
- **Know the basic of rods.**

A rod assembly consists of a tie rod, two check-nuts, and two tie rod terminal fittings. The tie rod is made of high strength steel, aluminium or CFRP and is threaded with right-hand and left-hand threads at opposite ends.

A portion of the shank is flat, which allows a wrench to be used for turning the tie rod during installation and adjustment.

The push-pull, control or tie rods are adjustable or non-adjustable length rods.

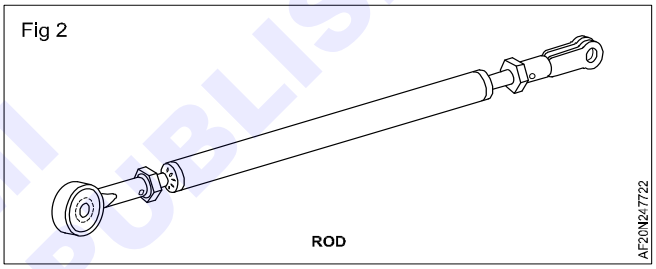

There are several different types of rod ends. Rod ends are available with threaded, clevis, and bearing ends.

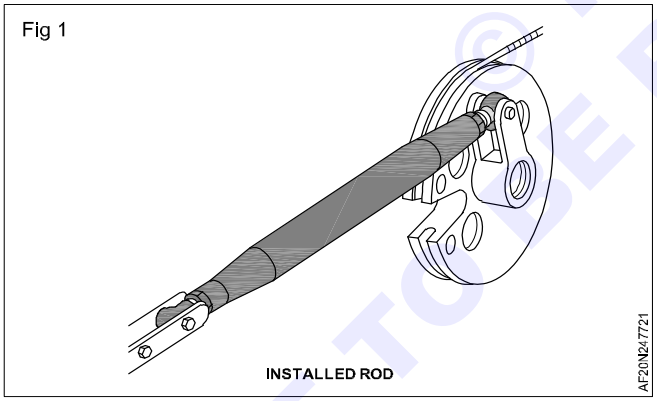

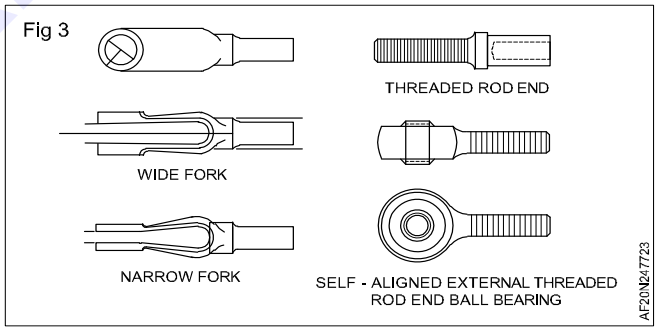

Basic components - Pulley

Objective: At the end of this lesson you shall be able to
- **Know the basic of pulley.**

Pulleys are grooved wheels used to change cable direction and to allow the cable to move with a minimum of friction.

Most pulleys used on aircraft are made from layers of cloth impregnated with phenolic resin and fused together under high temperatures and pressures.

Aircraft pulleys are extremely strong and durable and cause minimum wear on the cable passing over them.

Pulleys are provided with grease-sealed bearings and usually do not require further lubrication.

Pulley brackets made of sheet or cast aluminum are required with each pulley installed in the aircraft. Besides holding the pulley in the correct position and at the correct angle, the brackets prevent the cable from slipping out of the groove on the pulley wheel.

NOT TO BE REPUBLISHED © NIMI

Basic components - Bell-crank, walking-beam, sectors and quadrants

Objective: At the end of this lesson you shall be able to
- **Know the basic use of bell-crank and walking-beam**
- **Know the basic use of sector and quadrant.**

Sectors and quadrants are generally constructed in the form of an arc or in a complete circular form. They are grooved around the outer circumference to receive the cable with ball end fittings. The terms sector and quadrant are used interchangeably.

Fig 1

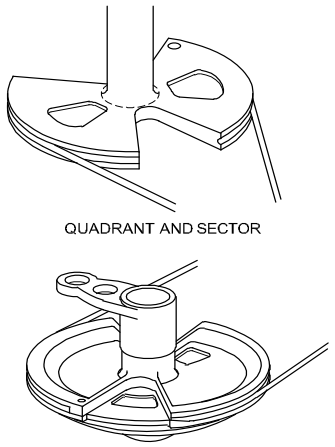

Bell-cranks and walking-beams are similar to sectors and quadrants. Are used for the same purpose in rigid control systems (push-pull rods).

A bell-crank has two arms that form an angle of less than 180 degrees, with a pivot point where the two arms meet. The walking beam is a straight beam with a pivot point in the center.

Fig 2

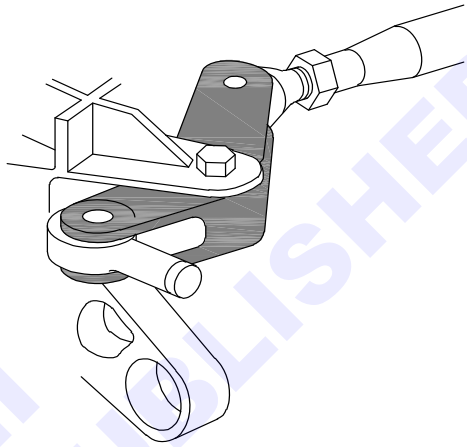

Basic components - Cable and cable terminal fittings

Objective: At the end of this lesson you shall be able to
- **Know the basic of cables**
- **Know the basic terminal fittings.**

A cable is a group of wires or a group of strands of wires twisted together into a strong wire rope. The wires or strands may be twisted in various ways.

The relationship of the direction of twist of each strand to each other and to the cable as a whole is called the lay. The lay of the cable is an important factor in its strength.

Cables may be designated according to their construction. A 7 x 7 cable consists of six strands of seven wires each, laid around a center strand of seven wires. A 7 x 19 cable consists of six strands of 19 wires, laid around a 19-wire central strand.

The size of cable is given in terms of diameter measurement. A 1/8-inch cable or a 5/16-inch cable means that the cable measures 1/8 inch or 5/16 inch in diameter.

Note that the cable diameter is that of the smallest circle that would enclose the entire cross section of the cable. Aircraft control cables vary in diameters, ranging from 1/16 of an inch to 3/8 of an inch.

Cable ends may be equipped with several different types of fittings such as terminals, thimbles, bushings, and shackles. Terminal fittings are generally of the swaged type.

Fig 1

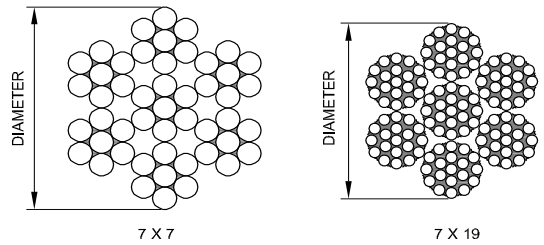

Fig 2

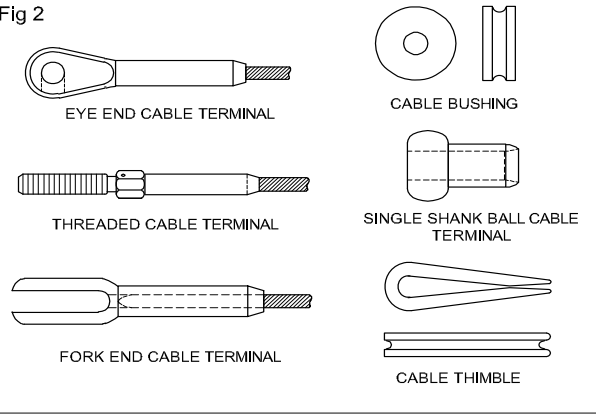

© NIMI NOT TO BE REPUBLISHED

Terminal fittings are available with threaded ends, fork ends, eye ends, and single-shank and double-shank ball ends.

Threaded-end, fork-end, and eye-end terminals are used to connect the cable to turnbuckles, bell-cranks, and other linkage in the system.

The ball terminals are used for attaching cable to quadrants and special connections where space is limited.

The single-shank ball end is usually used on the ends of cables and the double-shank ball end may be used either at the ends or in the center of a cable run.

Basic components - Turnbuckles

Objective: At the end of this lesson you shall be able to
- **Know the basic of turnbuckles**
- **Know how to lock turnbuckle.**

A turnbuckle is a mechanical screw device that consists of two threaded terminals and a threaded barrel.

Turnbuckles are fitted in the cable assembly to make minor adjustments in cable length and to adjust cable tension. One of the terminals has right-hand threads and the other has left-hand threads. The barrel has matching right- and left-hand threads internally. The end of the barrel, with left-hand threads inside, can usually be identified by either a groove or knurl around the end of the barrel.

Barrels and terminals are available in both long and short lengths.(Fig 1)

Fig 1

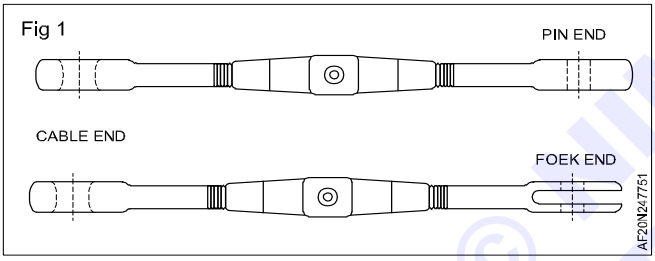

When you install a turnbuckle in a control system, it is necessary to screw both of the terminals an equal number of turns into the turnbuckle barrel. It is also essential that all turnbuckle terminals be screwed into the barrel, at least, until not more than three threads are exposed. On initial installation, the turnbuckle terminals should not be screwed inside the turnbuckle barrel more than four threads.

After a turnbuckle is properly adjusted, it must be safetied.

Safety locking

Clip - locking Turnbuckles (Fig 2)

The clip-locking method of safetying uses a NAS lock clip. To safety the turnbuckle, the slot in the barrel must be aligned with the slot in the cable terminal by holding the lock clip between the thumb and forefinger at the end loop. The straight end of the clip should be inserted into the aperture formed by the aligned slots by bringing the hook end of the lock clip over the hole in the center of the turnbuckle barrel and seating the hook loop into the hole. Application of pressure to the hook shoulder at the hole will engage the hook lip in the turnbuckle barrel and complete the safety locking of one end. The above steps are then repeated on the opposite end of the turnbuckle barrel. Both locking clips may be inserted in the same

Fig 2

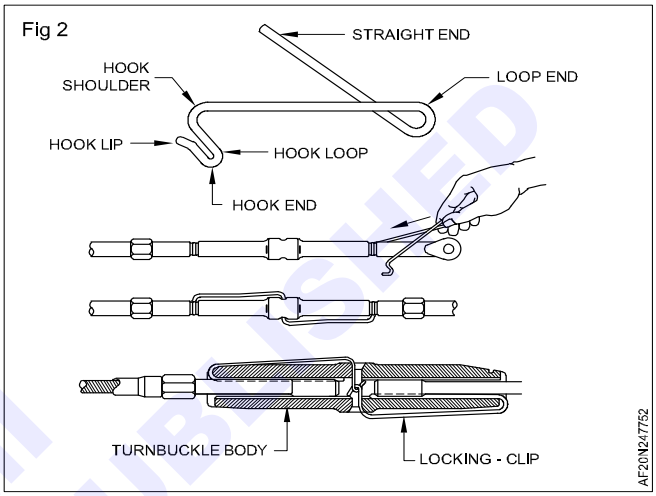

turnbuckle barrel hole, or they may be inserted in opposite holes.

Wire - wrapping turnbuckles (Fig 3)

First, two safety wires are passed through the hole in the center of the turnbuckle barrel. The ends of the wires are bent 90 degrees toward the ends of the turnbuckle, as shown in the figure.

Next, the ends of the wires are passed through the holes in the turnbuckle eye or between the jaws of the turnbuckle fork, as applicable. The wires are then bent toward the center of the turnbuckle, and each one wrapped four times around the shank. This secures the wires in place.

When a swaged turnbuckle terminal is being safetied, one wire must be passed through the hole provided for this purpose in the terminal. It is then looped over the free end of the other wire, and both ends wrapped around the shank.

Fig 3

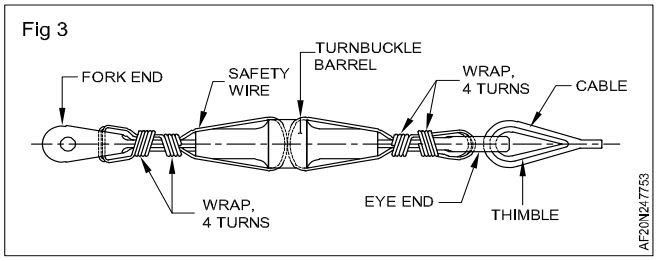

© NIMI NOT TO BE REPUBLISHED

Hydraulic system - Description and components

Objectives: At the end of this lesson you shall be able to
- **Know how to work hydraulic system**
- **Know the main component of hydraulic system**
- **Understand the hydraulic system documentation.**

Basic hydraulic system overview - Refresh

Hydraulics is a method of transmitting power through pipes and control devices, using liquid as the operating medium. For certain applications hydraulic systems are used in preference to mechanical or electrical systems for a number of reasons, among which are ease of application of force, ability to increase the applied force as necessary, ease of routing of pipelines, etc.

Hydraulic systems in aircraft provide a means for the operation of aircraft components.

The operation of landing gear, flaps, flight control surfaces, and brakes is largely accomplished with hydraulic power systems.

To achieve the necessary redundancy and reliability, the system may consist of several subsystems. Each subsystem has a power generating device (pump), reservoir, accumulator, heat exchanger, filtering system, etc.

System operating pressure from 3,000 to 4,000 psi in large aircrafts.

Hydraulic line making - Refresh (Fig 1)

Fig 1

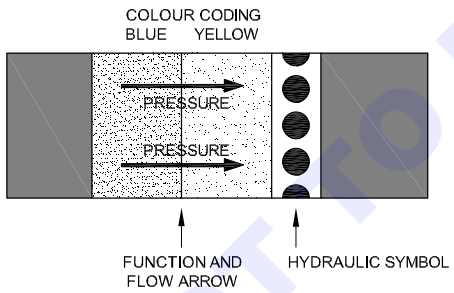

HYDRAULIC LINE MAKING - REFRESH

Definitions of components, use and examples

Accumulator (Fig 2)

Device for storing liquid under pressure, usually consisting of a chamber separated into a gas compartment and a liquid compartment by a bladder, piston, or diaphragm. An accumulator also smooths out pressure surges in a hydraulic system.

Actuating Cylinder

Device that converts fluid power into linear mechanical force and motion.

Fig 2

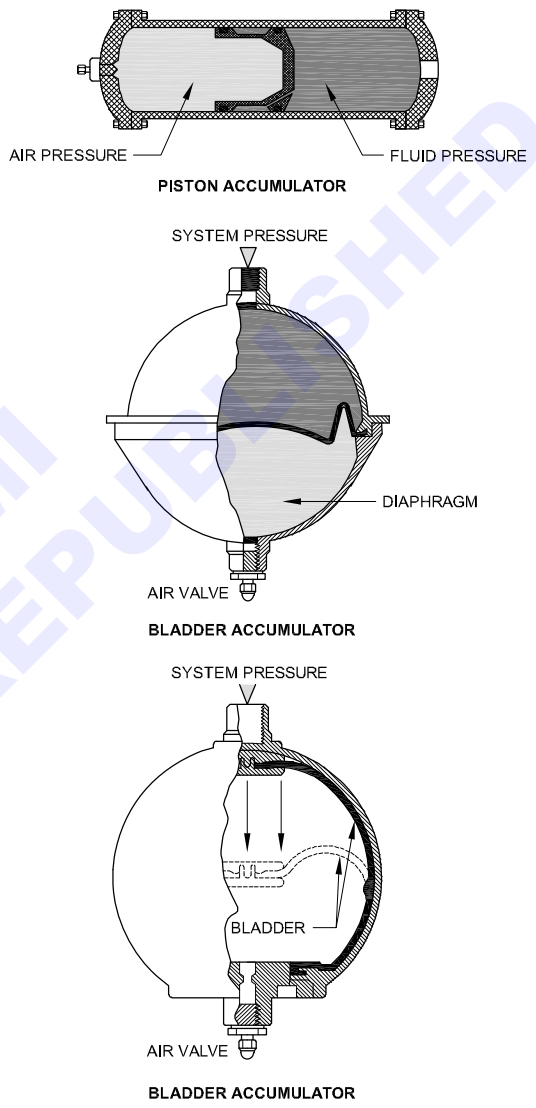

Double-action actuating cylinder in which both strokes are produced by pressurized fluid.(Fig 3)

Fig 3

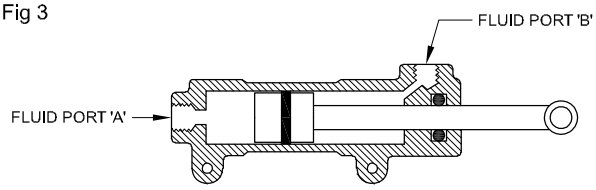

DOUBLE - ACTING ACTUATING CYLINDER

© NIMI NOT TO BE REPUBLISHED

Single-action—actuating cylinder in which one stroke is produced by pressurized fluid and the other stroke is produced by some other force, such as gravity or spring tension. (Fig 4)

Fig 4

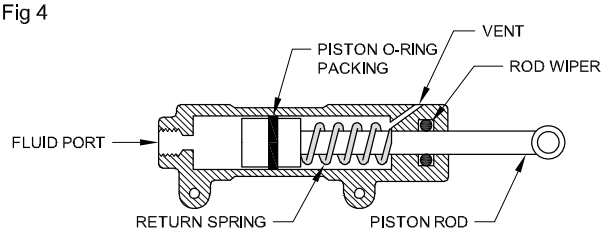

SINGLE - ACTING ACTUATING CYLINDER

Pump

Device that converts mechanical energy into fluid energy.

Gears pump (Fig 5)

Type of hydraulic pump that utilizes gears to move fluid.

Fig 5

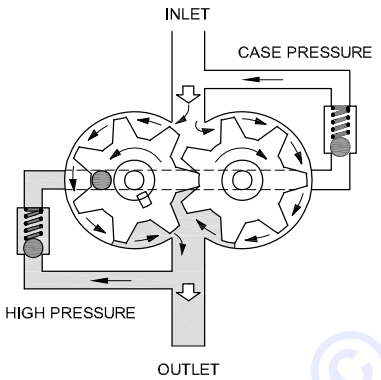

GEARS PUMP

Working principle for piston pump (Fig 6)

Fig 6

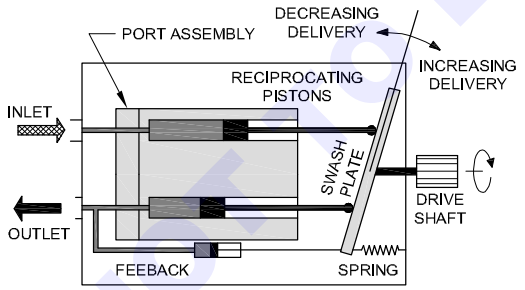

WORKING PRINCIPLE OF PISTON PUMP

Angular piston pump (Fig 7)

Hydraulic pump that has the cylinder block placed at an angle to the drive shaft plate where the pistons are attached. The angular configuration causes the pistons to stroke as the pump shaft is turned.

Cam piston pump (Fig 8)

Type of hydraulic pump that utilizes a cam to cause stroking of the pistons.

Fig 7

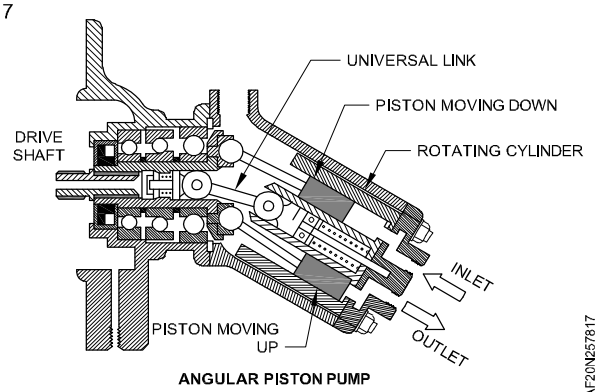

ANGULAR PISTON PUMP

Fig 8

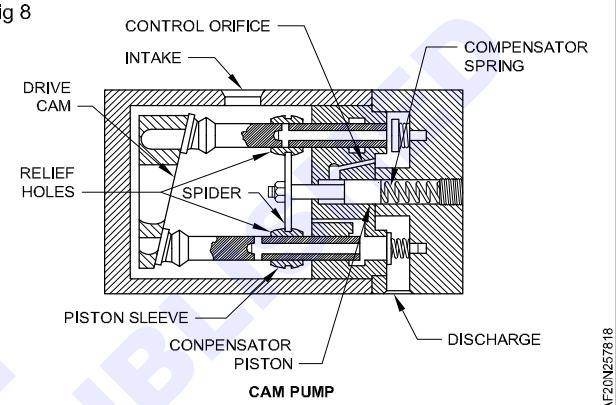

CAM PUMP

Fixed-displacement can pump

Pump in which the volume of fluid per cycle cannot be varied.

Variable-delivery can pump

Type of pump in which the volume of fluid per cycle can be varied.

Check valve (Fig 9)

Valve that permits fluid flow in one direction but prevents flow in the reverse direction.

Fig 9

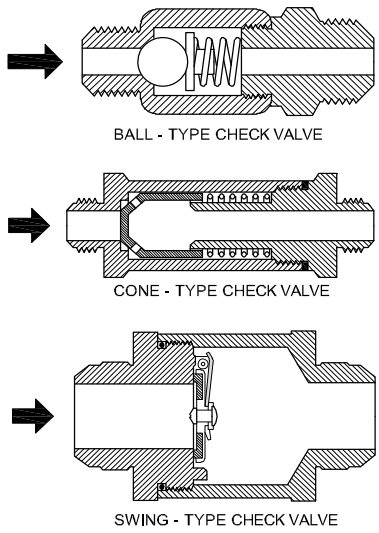

CHECK VALVES

© NIMI NOT TO BE REPUBLISHED

Closed-centre valve (Fig 10)

Type of valve that has its pressure passage blocked to fluid flow when the valve is in the OFF position.

Fig 10

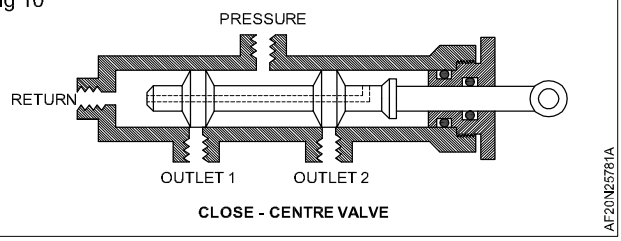

CLOSE - CENTRE VALVE

Open-centre valve (Fig 11)

Type of valve that has its pressure passage open to return when the valve is in the OFF position.

Fig 11

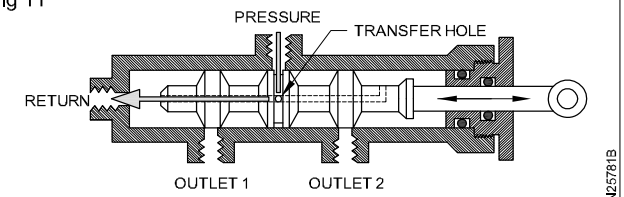

OPEN - CENTRE VALVE

Pressure relief valve (Fig 12)

Pressure control valve used to keep system pressure from exceeding predetermined limits.

Fig 12

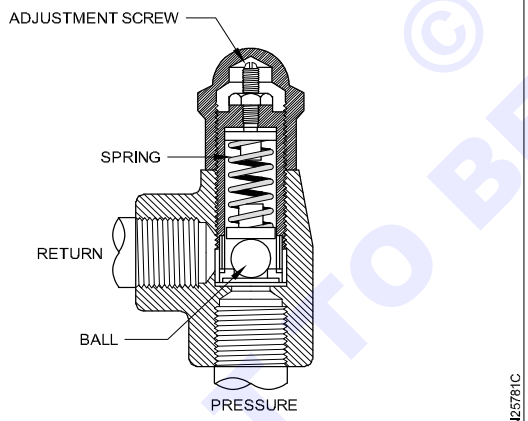

PRESSURE RELIEF VALVE

Priority valve (Fig 13)

Valve used to route fluid to those components requiring immediate completion of action when a reduction in normal system flow and pressure occurs.

Selector valve (Fig 14)

Valve used to control the direction of movement of an actuating unit.

Filter (Fig 15)

Device used to remove contaminants from hydraulic fluid.

Fig 13

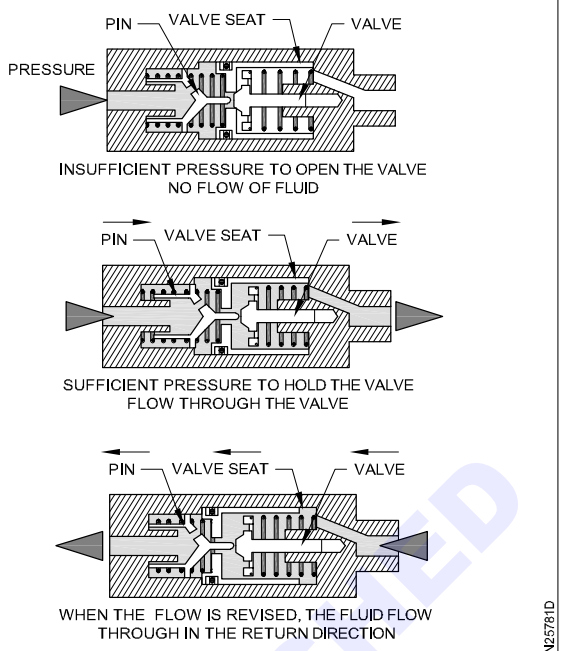

PRIORITY VALVE

Fig 14

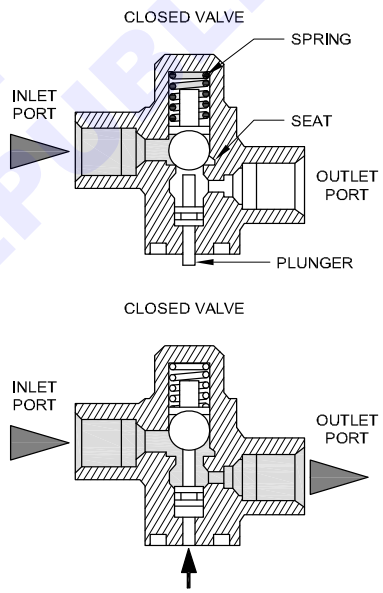

SEQUENCE VALVE

Fig 15

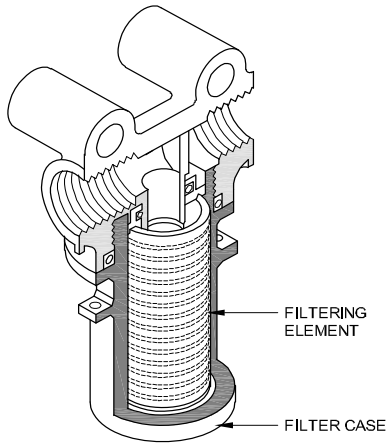

FILTER

© NIMI NOT TO BE REPUBLISHED

Pressure reducer (Fig 16)

Device for lowering the pressure in a hydraulic system to allow a component to operate at a lower pressure than the rest of the system.

Fig 16

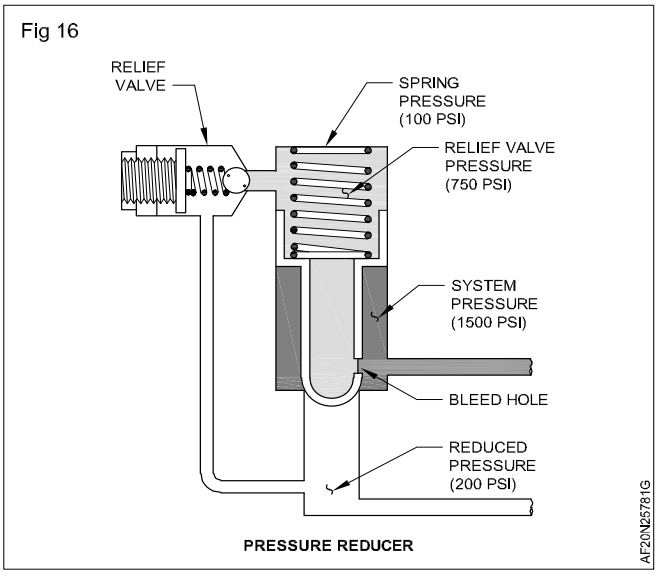

Pressure switch

Electrical switch operated by the increase or decrease of fluid pressure.

Reservoir

Container that serves primarily as a supply source of the fluid for a hydraulic system.

Basic hydraulic system

Open-Center Hydraulic system (Fig 17)

An open-center hydraulic system has hydraulic fluid flow but no pressure until some actuating unit is operated.

A typical basic open-center system such as the one shown in figure below consists primarily of a reservoir, a constant delivery type pump, a relief valve, one or more selector valves, and one or more actuating units.

The system relief valve limits system pressure when the selector valve is in an on position and an actuating unit is operating.

Fig 17

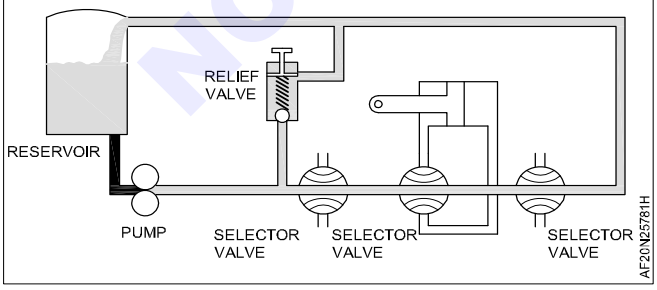

Operation of system with selector valves in off position.

Fluid flows from the reservoir into the pump and from the pump Into the main pressure line. Because all selector valves are in the off position (open), the fluid passes back to the reservoir through the open-center passage of these valves.

Operation of system with one selector valve in on position. (Fig 18)

With one selector valve in operating position, fluid flows under pressure to the actuating unit.

As the actuating unit moves, it forces residual fluid from the piston through the open selector valve and back to the reservoir. This condition exists until be selector valve is returned to the neutral (off) position.

Fig 18

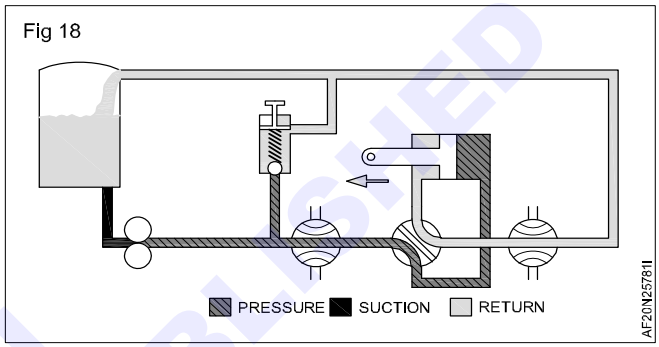

Closed - Center Hydraulic systems (Fig 19)

In the closed-center system, the fluid is under pressure whenever the power pump is operating. The three actuators are arranged in parallel and actuating units B and C are operating at the same time, while actuating unit A is not operating. This system differs from the open-center system in that the selector or directional control valves are arranged in parallel and not in series. The means of controlling pump pressure varies in the closed-center system. If a constant delivery pump is used, the system pressure is regulated by a pressure regulator. A relief valve acts as a backup safety device in case the regulator fails.

Fig 19

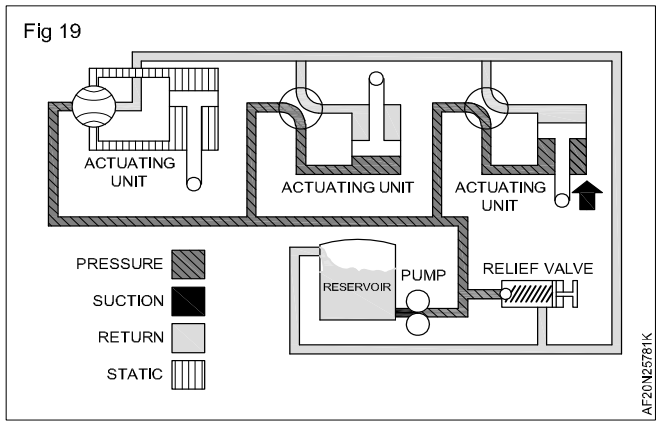

© NIMI NOT TO BE REPUBLISHED

Real aircraft schematic hydraulic system diagram

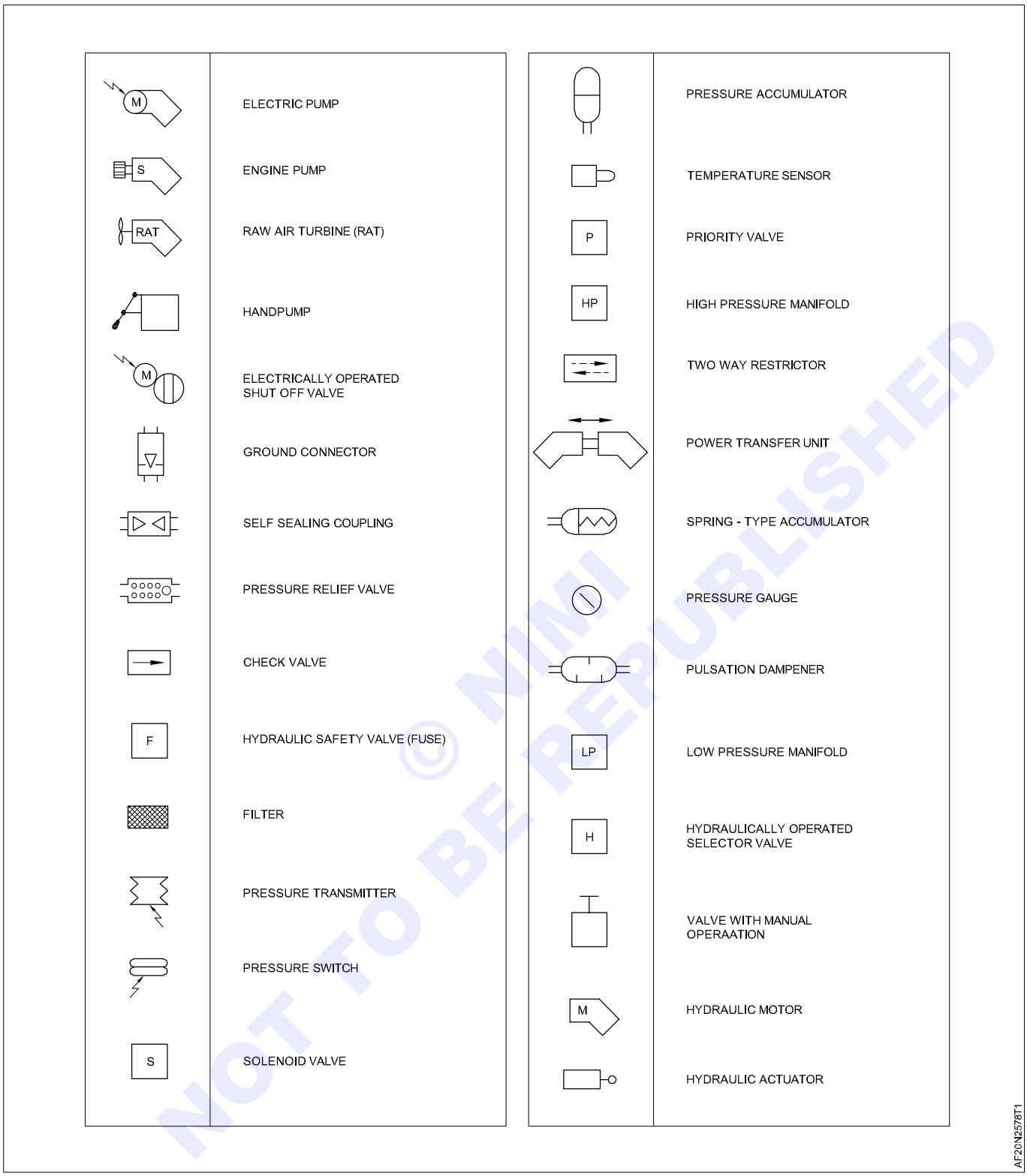

Symbols used in hydraulic drawing

© NIMI NOT TO BE REPUBLISHED

Fig 1

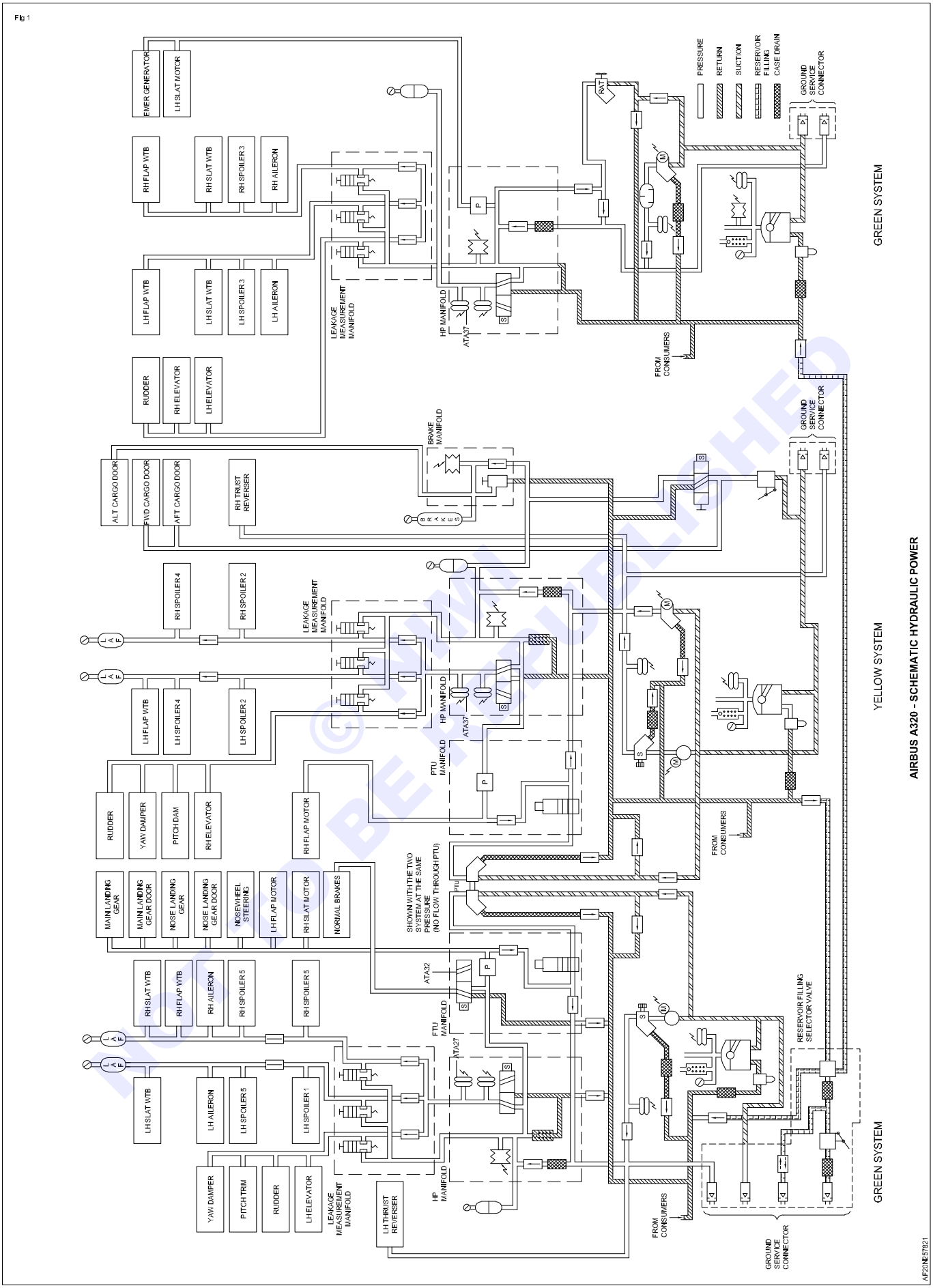

AIRBUS A320 - SCHEMATIC HYDRAULIC POWER

NOT TO BE REPUBLISHED © NIMI

Pneumatic system - Description and components

Objectives: At the end of this lesson you shall be able to
- **Know how to work pneumatic system**
- **Know the main component of pneumatic system**
- **Understand the pneumatic system documentation.**

Basic pneumatic system overview

Some aircraft manufacturers have equipped their aircraft with a high-pressure pneumatic system

Such systems operate a great deal like hydraulic systems, except they employ air instead of a liquid for transmitting power. Pneumatic systems are sometimes used for:

- Brakes
- Opening and closing doors
- Driving hydraulic pumps, alternators, starters, water injection pumps, etc.
- Operating emergency devices

Both pneumatic and hydraulic systems are similar units and use confined fluids.

Liquids are practically incompressible; a quart of water still occupies about a quart of space regardless of how hard it is compressed. But gases are highly compressible; a quart of air can be compressed into a thimbleful of space. In spite of this difference, gases and liquids are both fluids and can be confined and made to transmit power.

High - Pressure systems

For high-pressure systems, air is usually stored in metal bottles at pressures ranging from 1,000 to 3,000 psi, depending on the particular system. This type of air bottle has two valves, one of which is a charging valve.

Medium- Pressure systems

A medium-pressure pneumatic system (50–150 psi) usually does not include an air bottle. Instead, it generally draws air from the compressor section of a turbine engine. This process is often called bleed air and is used to provide pneumatic power for engine starts, engine deicing, wing deicing, and in some cases, it provides hydraulic power to the aircraft systems.

Engine bleed air is also used to pressurize the reservoirs of the hydraulic system.

Bleed air systems aren't more detailed in this book.

High-Pressure Pneumatic System Components

Pneumatic systems are often compared to hydraulic systems, but such comparisons can only hold true in general terms.

Pneumatic systems do not utilize reservoirs, hand pumps, accumulators, regulators, or engine-driven or electrically driven power pumps for building normal pressure. But similarities do exist in some components.

Air Compressors

Several types of compressors are used to recharge air bottles whenever pressure is used for operating a unit.

Relief valves (Fig 1)

Relief valves are used in pneumatic systems to prevent damage. They act as pressure limiting units and prevent excessive pressures from bursting lines and blowing out seals.

Fig 1

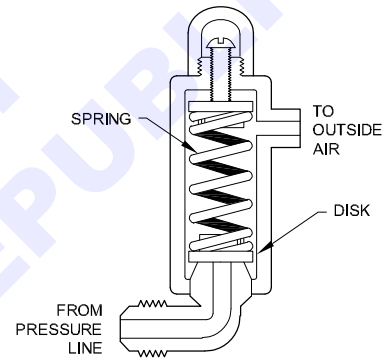

PNEUMATIC RELIEF VALVE

Control valves (Fig 2)

Control valves are also a necessary part of a typical pneumatic system illustrates how a valve is used to control emergency air brakes. The control valve consists of a three-port housing, two poppet valves, and a control lever with two lobes.

Check valves (Fig 3)

Check valves are used in both hydraulic and pneumatic systems.

Figure 3 illustrates a flap-type pneumatic check valve. Air enters the left port of the check valve, compresses a light spring, forcing the check valve open and allowing air to flow out the right port. But if air enters from the right, air pressure closes the valve, preventing a flow of air out the left port. Thus, a pneumatic check valve is a one-direction flow control valve.

Restrictors (Fig 4)

Restrictors are a type of control valve used in pneumatic systems. Figure 4 illustrates an orifice-type restrictor with a large inlet port and a small outlet port. The small outlet port reduces the rate of airflow and the speed of operation of an actuating unit.

© NIMI NOT TO BE REPUBLISHED

Fig 2

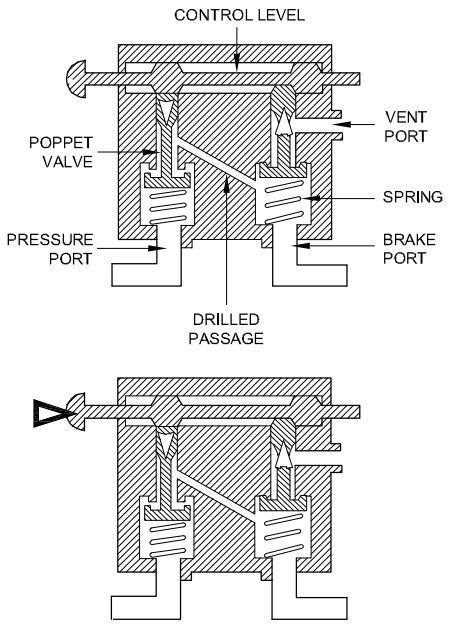

CONTROL VAVLE

Fig 3

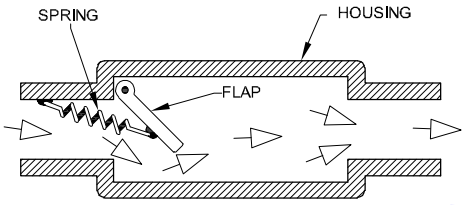

OPEN CHECK VALVE

Fig 4

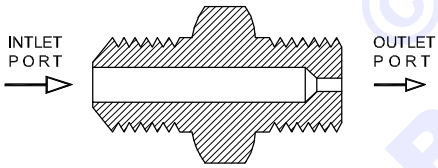

Another type of speed-regulating unit is the variable restrictor. It contains an adjustable needle valve, which has threads around the top and a point on the lower end. Depending on the direction turned, the needle valve moves the sharp point either into or out of a small opening to decrease or increase the size of the opening.

Filters

Pneumatic systems are protected against dirt by means of various types of filters. A filter consists of a housing with two ports, a replaceable cartridge, and a relief valve.

Normally, air enters the inlet, circulates around the cellulose cartridge, and flows to the centre of the cartridge and out the outlet port. If the cartridge becomes clogged with dirt, pressure forces the relief valve open and allows unfiltered air to flow out the outlet port.

Desiccant/Moisture separator

The moisture separator in a pneumatic system is always located downstream of the compressor. Its purpose is to remove any moisture caused by the compressor. A complete moisture separator consists of a reservoir, a pressure switch, a dump valve, and a check valve. It may also include a regulator and a relief valve.

Chemical Drier (Fig 5)

Chemical driers are incorporated at various locations in a pneumatic system. Their purpose is to absorb any moisture that may collect in the lines and other parts of the system.

Fig 5

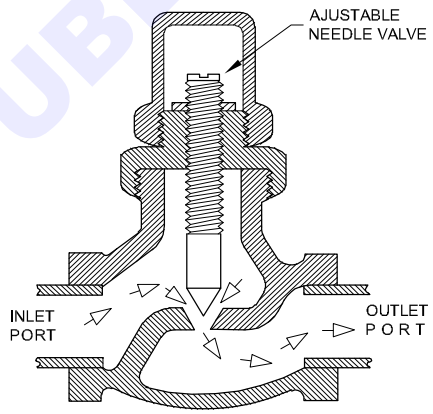

VARIABLE RESTRICTOR

NOT TO BE REPUBLISHED © NIMI

Fig 6

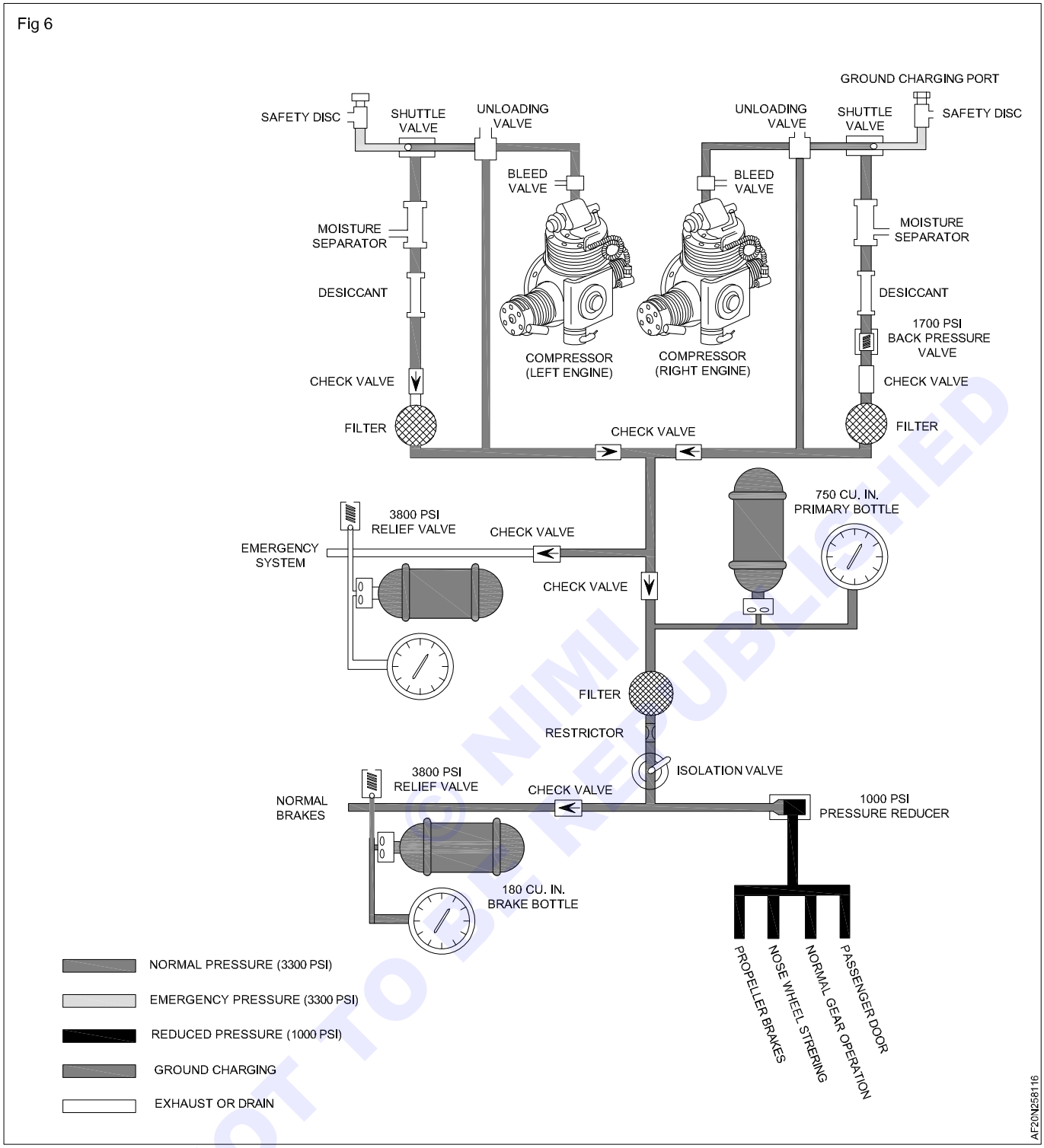

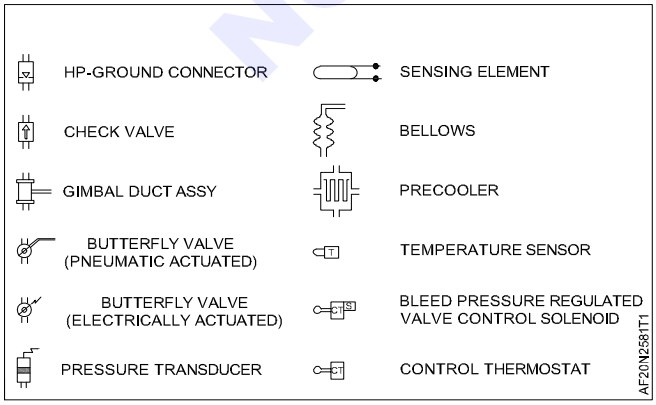

© NIMI NOT TO BE REPUBLISHED

Fig 7

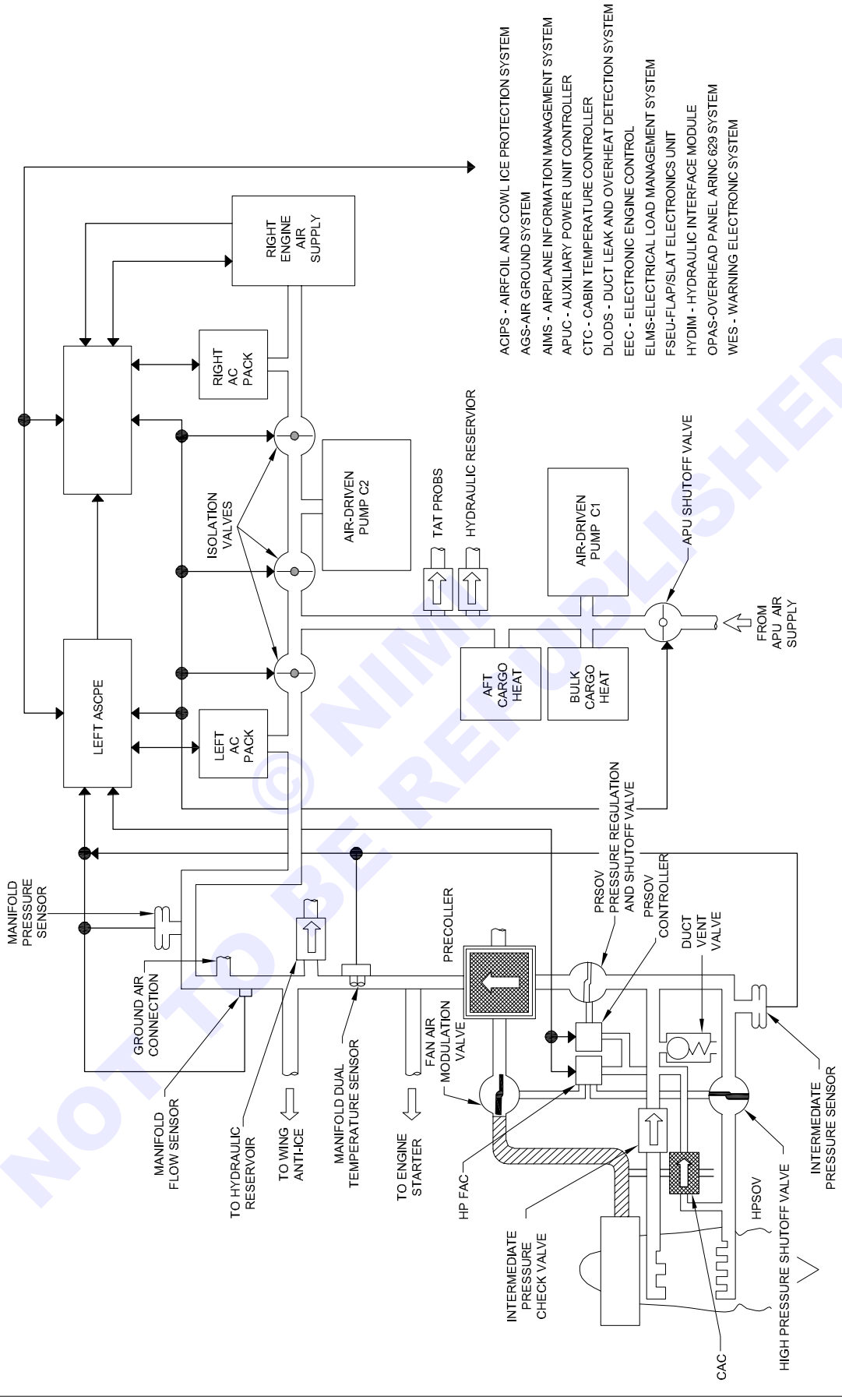

© NIMI NOT TO BE REPUBLISHED

Fig 8

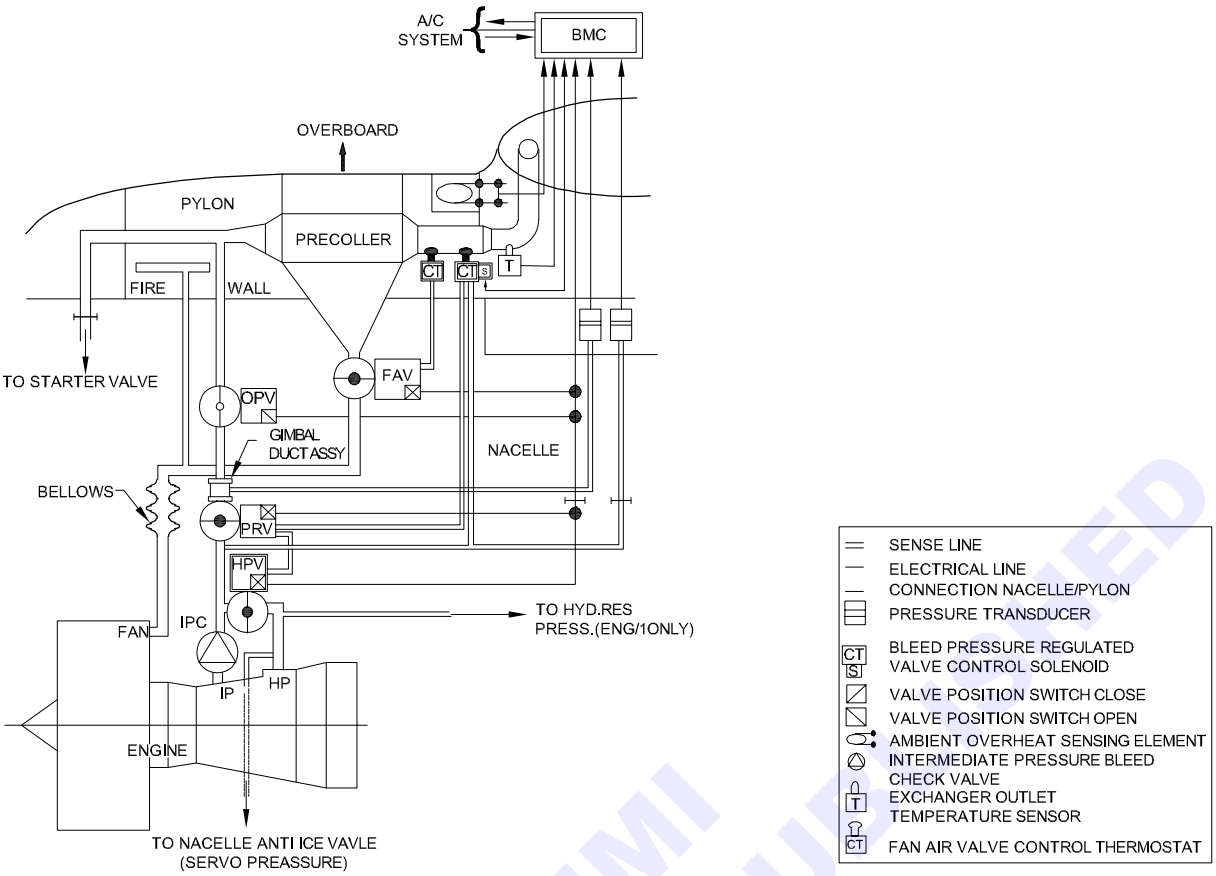

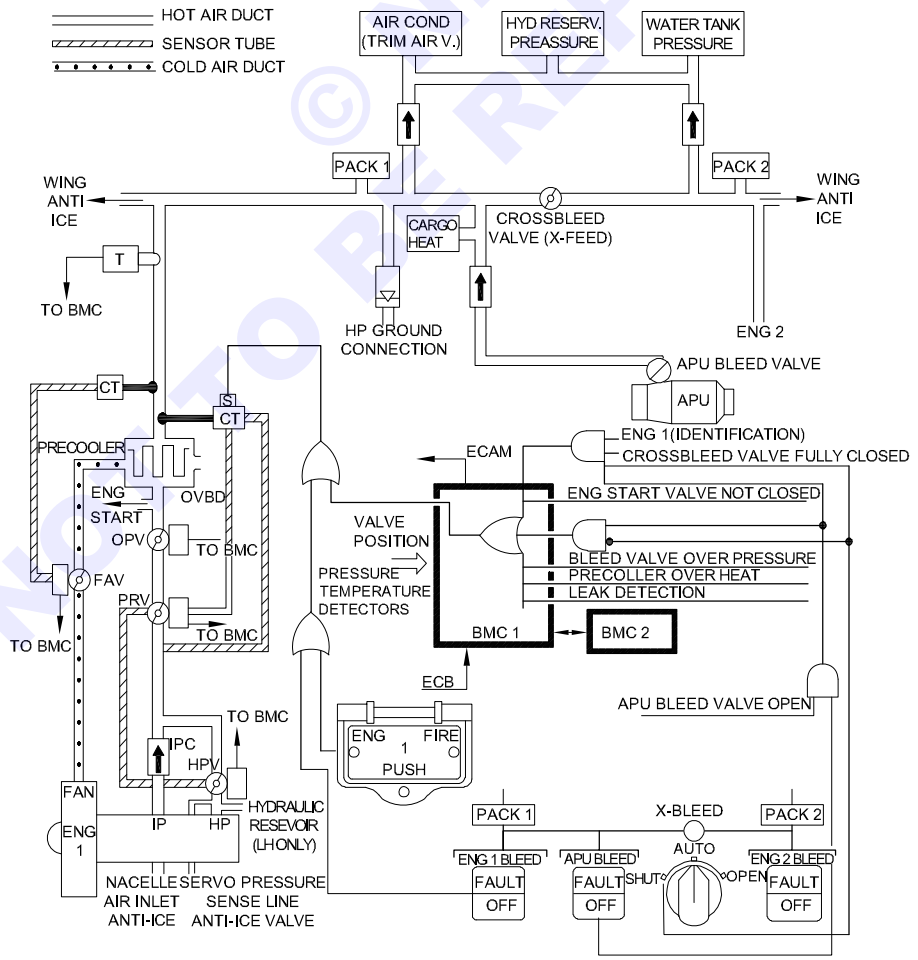

© NIMI NOT TO BE REPUBLISHED

Oxygen system - Safety

Objectives: At the end of this lesson you shall be able to
- **Know the danger to work on oxygen line.**

Basic oxygen system overview

With increase in altitude the pressure of the atmosphere and the partial pressure of its oxygen content decreases, resulting in a deficiency of oxygen in the blood and tissues of individuals subjected to such pressures.

Civil transport aircraft cruise at altitudes where cabin pressurisation is necessary to maintain conditions inside the cabin approximately equal to a maximum altitude of 8,000 feet, regardless of the actual altitude of the aircraft. Under such conditions, oxygen is not normally needed for the comfort of the passengers and crew.

However, as a precaution, oxygen equipment is installed for use in the event of a cabin pressurisation system failure.

In addition, portable oxygen sets are also provided for therapeutic purposes, and for cabin attendants' use while moving about the passenger cabin during low cabin pressure emergencies.

Pipe indication marking

Fig 1

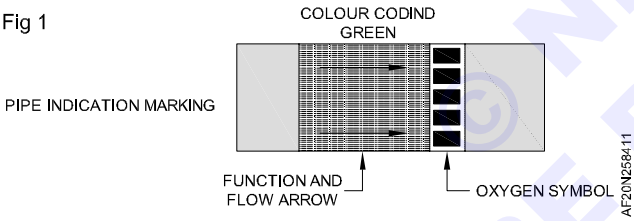

Safety working with oxygen

Leak in Confined area

In flight, the stowage compartments of oxygen bottle are naturally ventilated through the cabin ventilation system (air flow from DADO panel to outflow valve).

On the ground, when the aircraft is parked not powered, these ventilations are not effective any more.

The oxygen bottle and the distribution lines are installed in confined area. In the case of oxygen leak, the percentage of oxygen in the air will be higher.

The oxygen enrichment is not detected by human senses. An oxygen detector can be used before to get inside an area filled of oxygen.

If there is too high oxygen concentration in this area, do not go into this area and ventilate.

Clothes, skin and Equipment

Clothing, skin and equipment must be free of oil or grease.

Clothes and hair tend to absorb oxygen. Consequently, a person in an area where the air is filled with oxygen will keep a high concentration of oxygen. This oxygen stays on for some time. This person must avoid any source of ignition for 15 minutes.

Oxygen components Removal and Installation

Make sure that the ground support equipment is approved for the oxygen system. Equipment that is not approved can cause contamination of the system and injury.

Always work with clean clothes and tools. Keep your hands clean (possibly, wear gloves in cotton). Do not touch connection ends and interior of oxygen components with bare hands, because skin oil and bacteria are a source of contamination.

The area around the oxygen components must always be cleaned with approved cleaner before and after any work done on the system. Any tool, rag, cloth, or equipment that is not clean and free of oil traces must not be used or stay in the area around the oxygen components.

Make sure that all oxygen cylinder valves are closed. Due to possible residual pressure in the line, disconnect the connectors carefully.

Put dry, clean, metal or plastic plugs on all pipes or units removed temperarily. Put each pipe or unit in a sealed vinyl bag. Unwanted material in the oxygen system could damage the system or cause explosion if oil ingress.

Warning: Never use standard oil to lubricate the connector thread (risk of explosion).Only lubricants and thread compounds specifically approved for oxygen must be used.

During disconnection/reconnection of an oxygen line connector use two wrenches: one for the nut and one for the counter nut to avoid force onto the material (risk of rupture and leakage.

Make sure that the flexible hoses are not twisted or pulled tight. If the hoses are twisted or pulled tight the connections will break and cause a leak.

Torque the connection at the right value given by the maintenance manual.

Open and close the spring-loaded clamps carefully to prevent damage to the electrical harness near the oxygen cylinders.

NOT TO BE REPUBLISHED © NIMI

Wires and cables - Cutting and cutting defects

Objectives: At the end of this lesson you shall be able to
- **name the wires cutting tools**
- **know the good practises for cutting wire**
- **recognise the principals cutting defects.**

Before wire and cable can be installed in aircraft and connected to components it must be prepared by cutting to the appropriate lengths.

Cut all wires and cables to lengths given on drawings or wiring diagrams.

Cutting tools

Diagonal cutting pliers (Fig 1)

The diagonal cutting pliers have a fixed pivot. The jaws are offset by about 15 degrees and are shaped to give enough knuckle clearance while making flush cuts. The diagonal cutting pliers are used for cutting small, light materials such as wire, cotter pins, and similar materials.

Fig 1

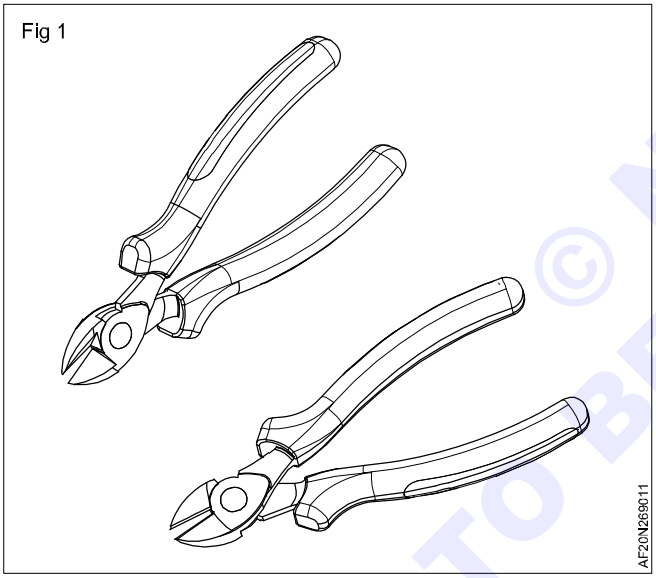

These pliers are not to be used to hold or grip objects

The choice of cutting pliers depends on the size of the wire to be cut.

The cutting capacity is usually marked on the pliers.

Always use the appropriate pliers with the wire gauge

Checking cutting wire

Cut wire and cable so that cut is clean and square, and wire is not deformed.

Fig 1

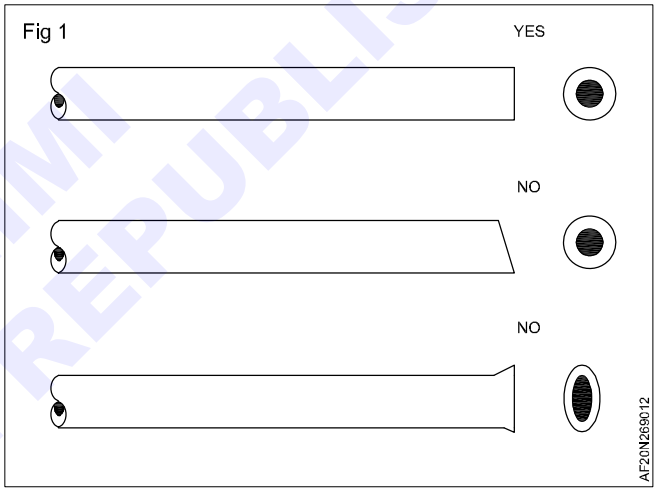

© NIMI NOT TO BE REPUBLISHED

Tying techniques

Objectives: At the end of this lesson you shall be able to
- **know the main tying techniques**
- **know how to use textile lacing tape**
- **know how to use plastic ties.**

Wire groups and bundles are laced or tied to provide ease of installation, maintenance, and inspection.

Definitions

Tying

Tying is the securing together of a group or bundle of wires, with individual ties at regular intervals around the group or bundle.

Lacing

Lacing is the securing together of a group or bundle of wires, installed inside enclosures, by means of a continuous cord forming loops at regular intervals around the group or bundle. Except for enclosures, wire groups or bundles should not be laced.

Use of textile lacing tape

Clove hitch

Named by Airbus: Capstan knot (Fig 1)

Fig 1

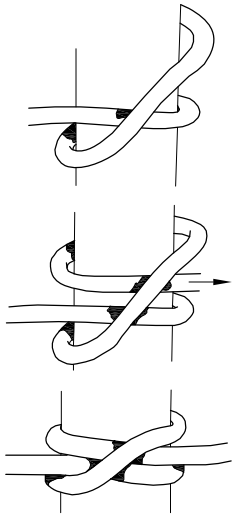

Constrictor knot (Fig 2)

Named by Airbus: Double capstan knot

Fig 2

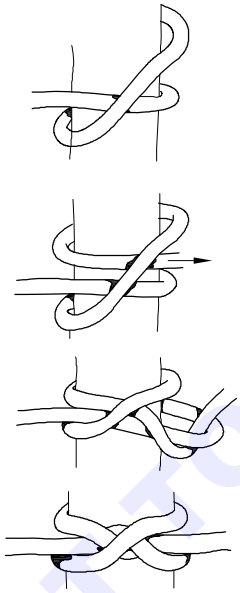

Single spot knot (Telephone hitch) (Fig 3)

Named by Airbus: American knot (Fig 3)

Finish of the knots (Fig 4)

Clove hitch, constrictor knot and telephone hitch must be finished with a knot.

End the lacing with a knot consisting of a half hitch, using one cord clockwise and the other counter clockwise (square knot), and then tying the cord ends with a square knot with an extra loop

Whipping knot (French whipping knot) (Fig 5)

Fig 3

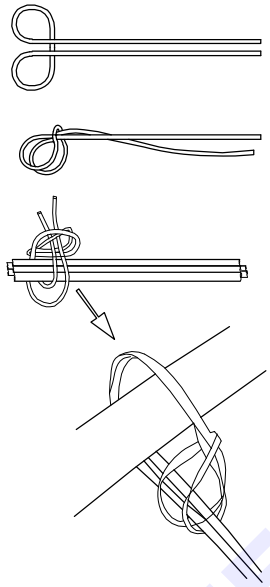

Fig 4

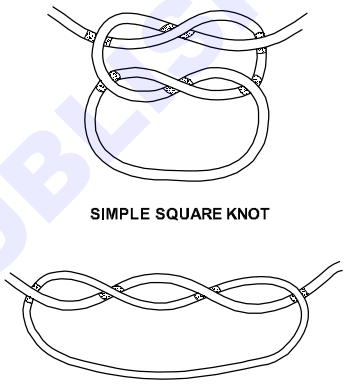

Fig 5

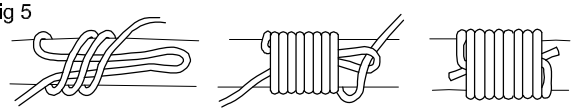

Use of cable ties

Use of cable ties for the design of technical harnesses with or without conduits is prohibited in zones where there is a risk of cables fretting or of cable tie heads jamming (everywhere where units are removed via the front, e.g. behind instrument panel, behind flight control unit, overhead panel, in pylons).

Cable ties shall not be used inside tubing and conduits.

The head of a cable tie shall never be in contact with an adjacent bundle, an adjacent cable or a branch of an adjacent bundle.

Tools (Examples) (Fig 6)

Installation (Fig 7)

From manufacturer table, select a strap size and appropriate tool for the wire bundle diameter being secured.

Slip strap tip around the bundle with boss side up.

© NIMI NOT TO BE REPUBLISHED

Fig 6

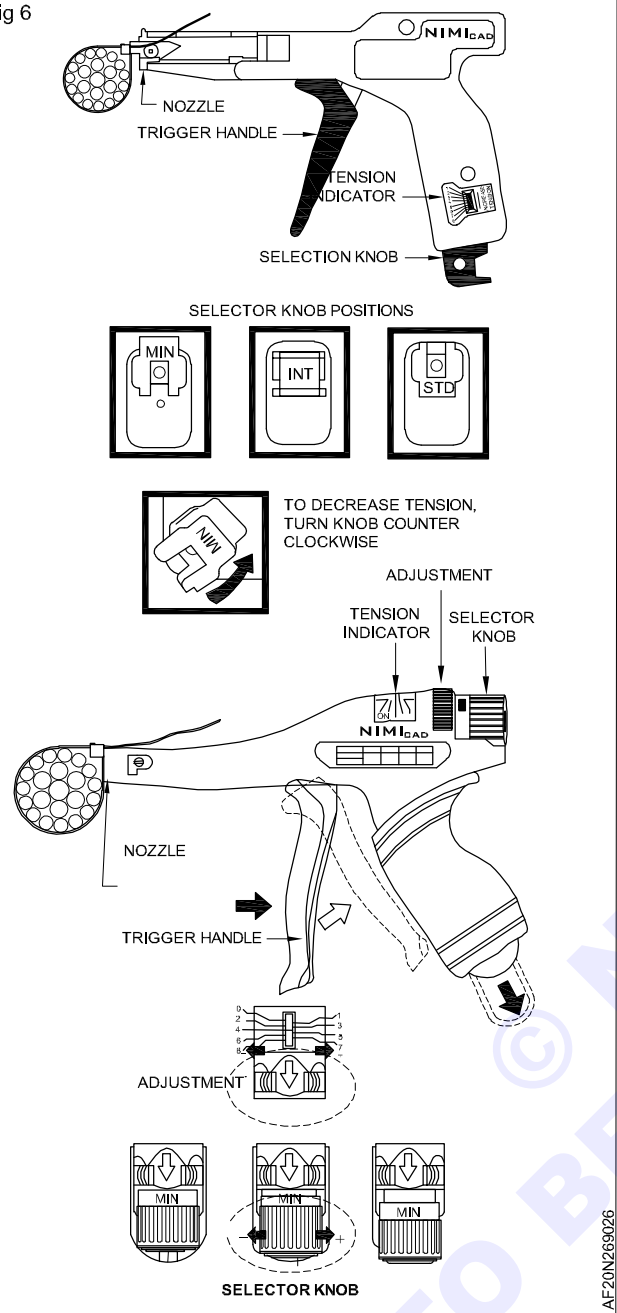

Fig 7

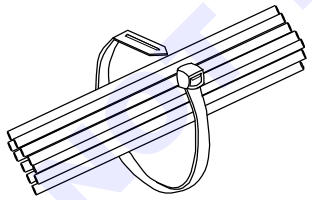

Thread tip through eye then hand pull strap tight against the bundle. (Fig 8)

Fig 8

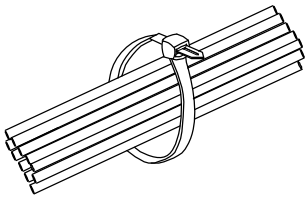

just the tool index line to the tension locator value specified in manufacturer standard. If standard changes in the tension adjustment knob do not align the index line with the required tension locator value, the knob may be pulled out and rotated until alignment occurs.

Pass the free end of the cable tie through the slot in the end of the tool, then push tool snugly against the boss. (Fig 9)

Fig 9

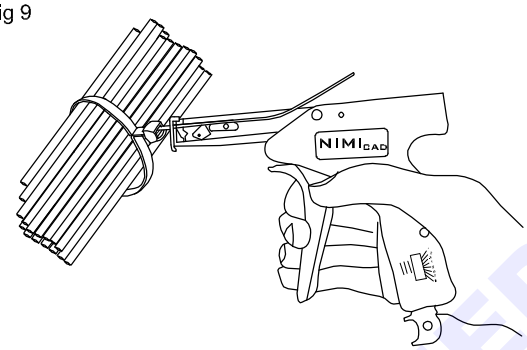

While holding strap firmly against side of tool and tool face squarely against boss, pump handle several times without fully activating the tool's cutting knife. Once the strap has been stretched to its maximum, squeeze handle slowly and firmly until strap is cut.

Carry out appropriate disposal of all broken straps and strap ends that were cut off

Checking cable tie installation

Inspect strap end to ensure strap end is flush with boss surface and trim or replace strap as required to ensure strap end is flush with boss surface. (Fig 10)

Fig 10

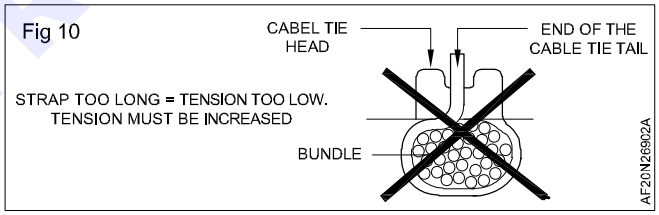

Strap too long = tension too low.

Tension must be in be increased (Fig 11)

Fig 11

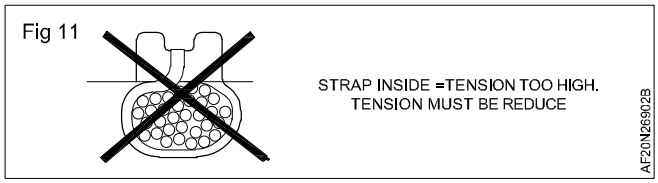

Strap inside = tension too high.

Tension must be reduce (Fig 12)

Fig 12

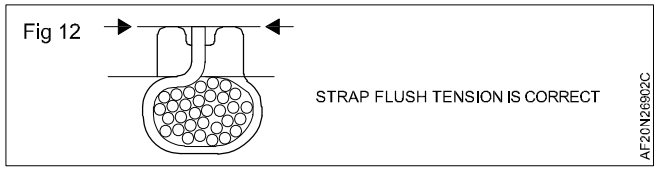

© NIMI NOT TO BE REPUBLISHED

Strap flush.

Tension is correct (Fig 13)

Fig 13

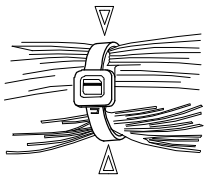

STRAP IS TOO TIGHT AND IS DEFORMING THE INSULATION ON THE WIRE.

AF20N26902D

Strap is too tight and is deforming the insulation on the wire.

Strap is too loose and will slip easily along the bundle with normal handling. (Fig 14)

Fig 14

STRAP IS TOO LOOSE AND WILL SLIP EASILY ALONG THE BUNDLE WITH NORMAL HANDLING.

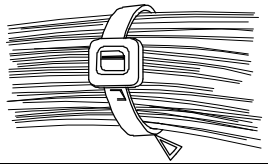

AF20N26902E

The strap will not move laterally along the bundle under normal handling but can be rotated in place. (Fig 15)

Fig 15

THE STRAP WILL NOT MOVE LATERALLY ALONG THE BUNDLE UNDER NORMAL HANDLING BUT CAN BE ROTATED IN PLACE.

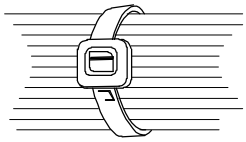

AF20N26902F

Assembly of wires to make a harness

The maximum number of wires in a harness shall be such that its diameter does not exceed 50 mm.

As a general rule, in a harness made up of several groups of wires, each group of wires must be tied with lacing tape.

Cable ties are used on the outside of harnesses to attach the groups of wires together. (Fig 17)

Fig 16

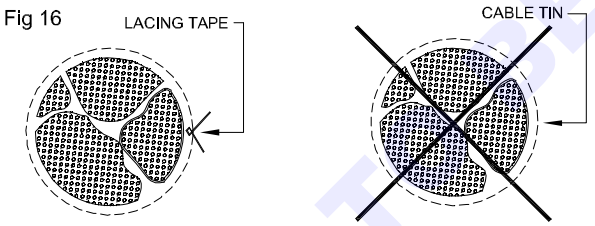

AF20N26902G

To facilitate installation and maintenance, the harnesses are not combed over their full length, but:

- Wires should not pass across the harness (Fig 18).

Fig 17

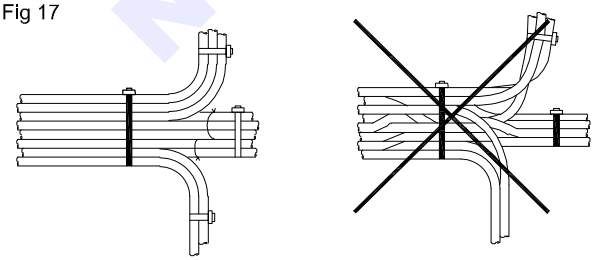

AF20N26902H

- Wires must not protrude from the harness (correct tying pitch helps prevent this condition - Fig 19).

Fig 18

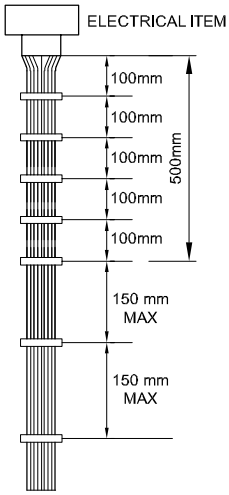

AF20N269021

Branches making

To prevent harnesses twisting when installed on aircraft, the position and direction of the branches on aircraft must be anticipated before the harnesses and branches are tied (Fig 20).

Fig 19

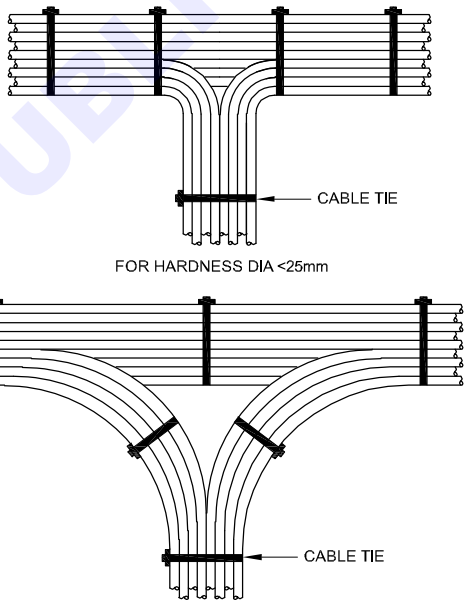

AF20N26902J

Crossed tying is only permitted with lacing tape. The use of cable tie is prohibited (Fig 21).

Fig 20

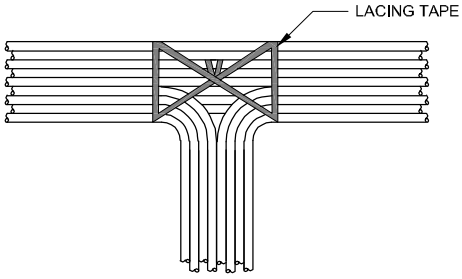

AF20N26902K

NOT TO BE REPUBLISHED © NIMI

Identification of bundle and harnesses

Objectives: At the end of this lesson you shall be able to
- **know the different type of identification marking**
- **know the different type of identification labels.**

Wire identification by the manufacturer

United States of America wire types

The code consists of 4 groups of letters or figures. The groups are separated by a dash or a space.

AKA	**FF**	**L**	**20**
Wire type			
Manufacturer and country			
Year of manufacture			
Wire gauge			

On single-wire cables:

- Printing on external sheath for gauge 6 to 26.
- Coloured thread for gauge 0000 and 4.

On twisted multi-wire cables:

- Printing of composition element reference.
- Printing of assembly reference on blue-coloured wire.

On shielded single-wire cables:

- Printing of composition element reference on the element.
- Printing of the assembly reference on the external sheath.

On shielded multi-wire cables:

- Coloured threads under the sheath.
- Printing of composition element reference on the blue-coloured
- Printed tape positioned under the external sheath.
- Printing of assembly reference on the external sheath.
- Printing of the assembly reference on the blue-coloured wire
- Printing of the element reference on each element

Metric wire types - EN Standard

The code consists of groups of letters or figure separated by a dash or a space sufficient to prevent any confusion.

EN2266-005	**A**	**002**	**P**	**FR**	**A**	**98**
Standard PN						
Code letter for number of core						
Wire gauge code						
Insulation color code						
Country of manufacturer						
Manufacturer code						
Manufacture year code						

a Single-wire cables:

- Printing on the external sheath.

b Twisted multi-wire cables:

- Printing of composition element reference and its colour on each element.
- Element colour.

c Shielded single-wire cables:

- Printing of element reference on the element.

  Mandatory printing of the assembly reference on external sheath.
- For laser printed cable, marking only on the external sheath.

Marking on the element is optional.

d Shielded multi-wire cables:

- Printing of element reference on each element.

  Optional printing of the assembly reference on the external sheath except indications on specific sheets. Each marking is linked by a dashed line.
- For laser printed cable, marking only of the external sheath.

Marking on the element is optional.

Wire functional identification

Wire Number

All wires connected on the aircraft must be identified. It is the functional identification of the wire.

A numeric reference system is used for wire identification.

The printable cables are identified by direct marking of the identification on the insulation, at regular intervals.

The **printable cables** are identified by direct marking of the identification on the insulation, at regular intervals (Fig 1).

Fig 1

AF20N269031

The non-printable cables are cables that cannot have direct marking due to their physical structure or whose insulation can be deteriorated by the marking.

© NIMI NOT TO BE REPUBLISHED

The cables are identified with sleeves. The sleeves shall be adapted to the cable gauge and located as close as possible to the terminations (150 mm max.).

The sleeves are white, printed black (Fig 2 to 5).

Fig 2

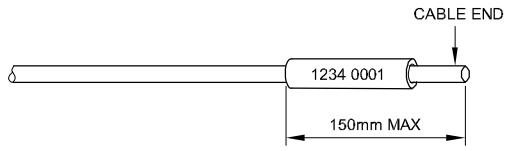

SINGLE WIRE CABLE WITH IDENTIFICATION SLEEVE

Fig 3

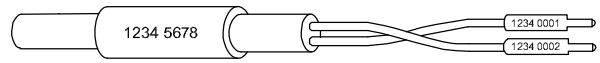

Fig 4

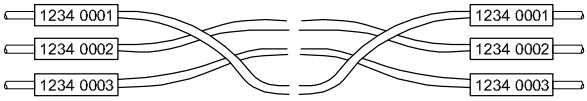

TWISTED WIRE WITHOUT SHEAT - WIRES OF SAME COLOUR

Fig 5

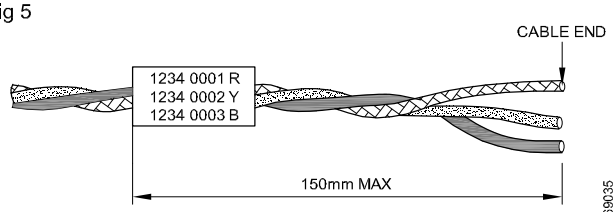

TWISTED WIRES WITHOUT SHEAT - WIRES OF DIFFERENT COLOUR

Bundle identification marking

Cables harnesses and bundles are marked by adhesive labels or identification labels. (Fig 6)

Fig 6

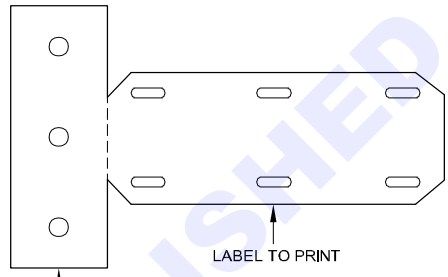

Mechanical protection for harness

Objectives: At the end of this lesson you shall be able to
- **know the main mechanical protection for harnesses.**

Conduits - Mains rules

When installing electrical cables inside a conduit, the following rules must be observed:

- Use of cable tie or lacing tape inside conduits is prohibited.
- The convoluted conduit must be of one piece. Connection of two conduits to make up required length is unacceptable.
- Make sure there is a draw wire in all conduits except for conduits shorter than 50 mm and those where all the cables have a disconnectable termination such as connectors, terminal blocks, etc.)

Size of the conduit

The choice of size of the conduit depends on the bundle diameter and on the conduit length.

Convoluted, screened and closed conduits must only be partially filled in such a way that the external diameter of the cable bundle

Split open conduits

Gripping strip open conduit (Fig 2)

Convoluted closed conduits (Fig 1)

Figure 1 below show different convoluted conduits used on aircraft.

Fig 1

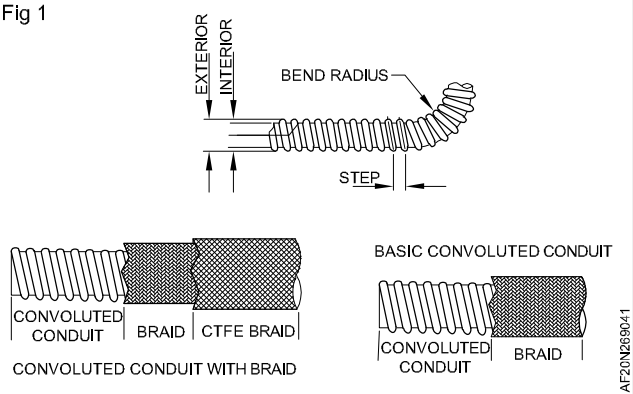

Fig 2

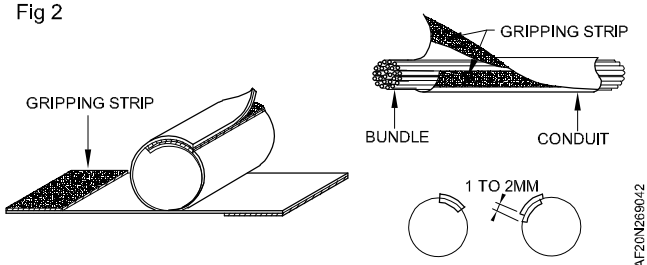

© NIMI NOT TO BE REPUBLISHED

Stripping - Basics rules

Objectives: At the end of this lesson you shall be able to
- **know the basics stripping rules.**

The stripping operation must remove the insulation from the cable over a given length with tolerances without damaging the core strands or the shielding and without reducing the original performance of the cable.

The insulation must be cut clean and not start tears or unwanted untwining of the insulating sheath.

NOTE: Stripping of a wire end implies the quasi immediate connection of the wire.

Do not store stripped cables.

The stripping length

The stripping length depends on the length required to connect the wire conductor to the end component and also depends on the dimensions of the end component barrel plus the tolerances of the stripped cable aft of the barrel.

Fig 1

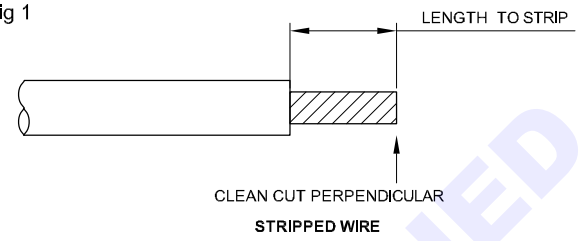

Electrical tool for stripping

Objectives: At the end of this lesson you shall be able to
- **know the parts of the tool for stripping.**

Fig 1

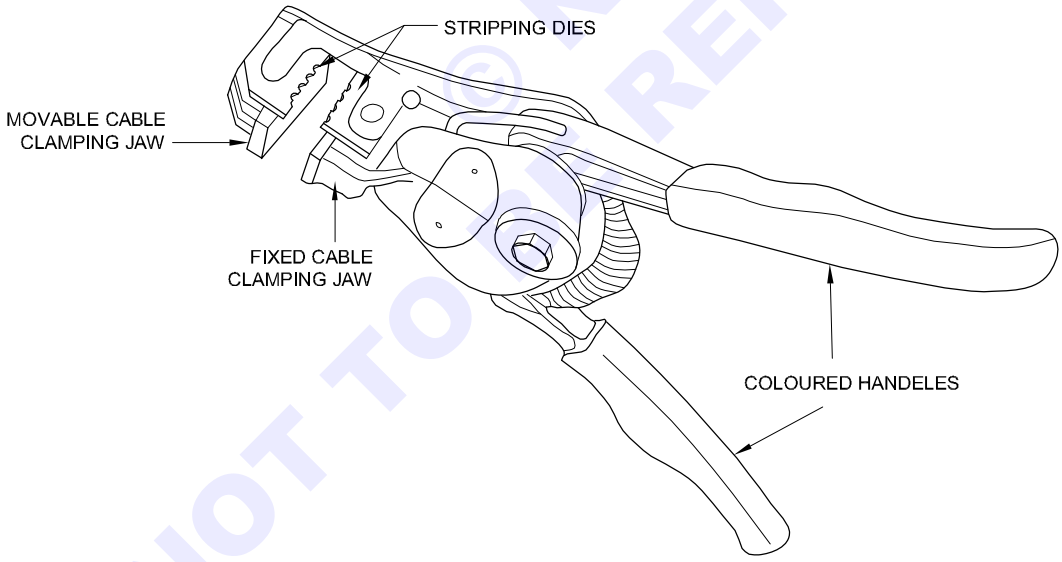

Stripping technique

Objectives: At the end of this lesson you shall be able to
- **know how to use stripping tool.**

Tool and Blade Inspection

Prior to wire stripping examine the tool and blade. Slowly squeeze the handle until blade open. The stripping jaws must begin to open after the blade is closed. Continue to squeeze the handle.

The blade must open prior to the jaws releasing and closing. If tool does not operate correctly, replace the tool. With a light source behind and in the middle of the closed blade visually examined the blade cavity.

© NIMI NOT TO BE REPUBLISHED

Inspect for imperfections or blade misalignment. The blade cavity shall be cylindrical and form a complete perimeter. A slight asymmetry of the two halves of the blade is acceptable if the blade does not damage the conductor when stripped. Asymmetrical shapes that do not form complete perimeters or cylinders are not acceptable. Realign blade and repeat inspection.

If problem persist replace blade and repeat inspection.

If problem still persist replace tool.

Use of wire stripper

1 Select proper wire stripper.

2 Place wire into exact center of correct cutting slot for wire sized to be stripped. The exposed end is amount of insulation to be stripped, a just wire in slot to strip correct amount of insulation. (Fig 1)

Fig 1

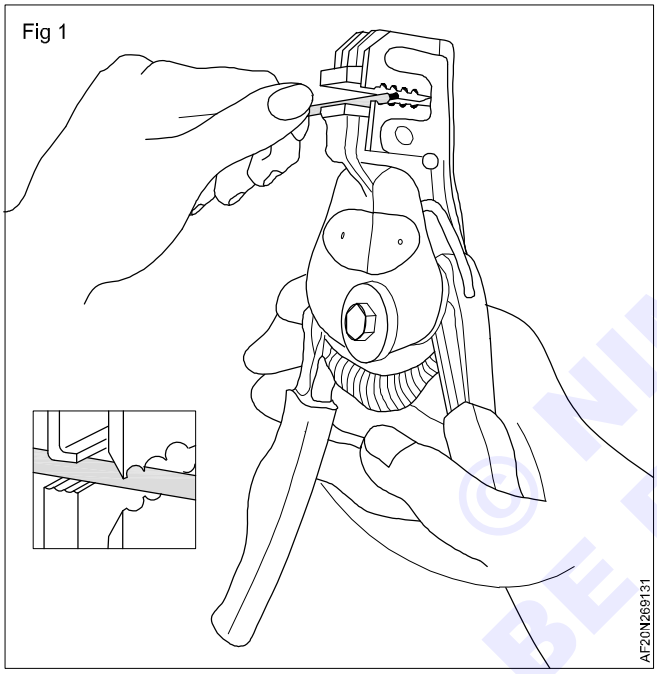

3 Slowly partially close handles and allow wire to center itself in size slot as the wire gripper or jaws apply pressure to wire.

4 Close handles with firm steady pressure and strip insulation from wire. (Fig 2)

5 Partially release handle pressure to allow jaws to open and remain separated. Remove stripped wire from stripper. Partial pressure release is a mechanical feature which prevent jaws from fully closing and damaging or bird caging of stripped end of wire.

Fig 2

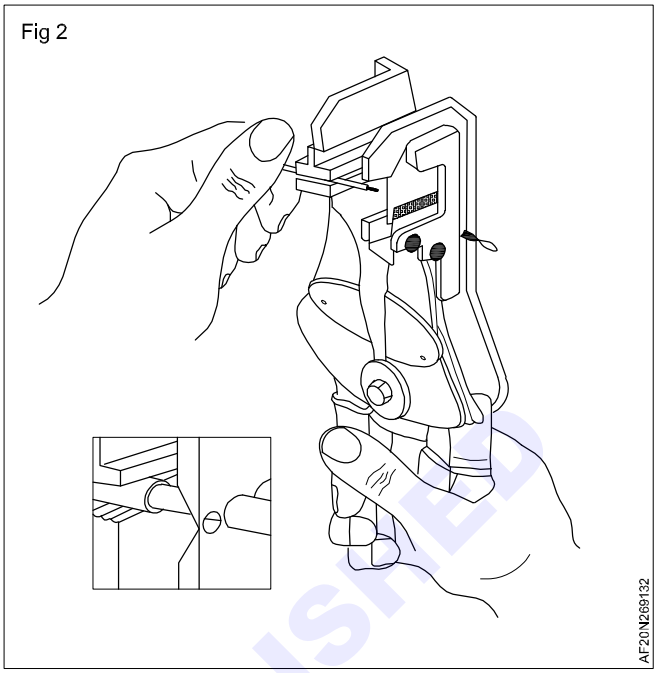

6 Inspect wire for broken or nicked strands and frayed or ragged insulation.

Fig 3

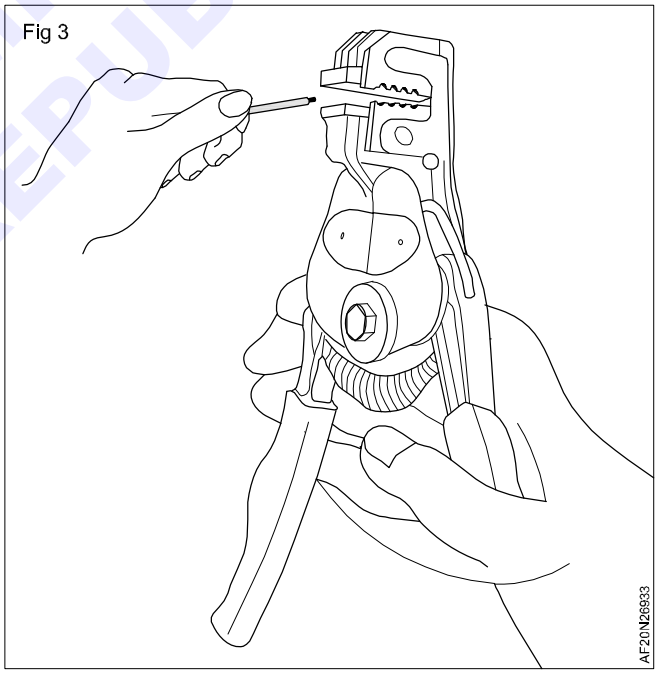

Stripping defects

Objectives: At the end of this lesson you shall be able to
- **know the stripping defects.**

Inspection of stripped wire. Inspect stripped wire as follows:

Visually inspect the wire and determine if any of the following conditions exist (see Figures for unacceptable

Fig 1

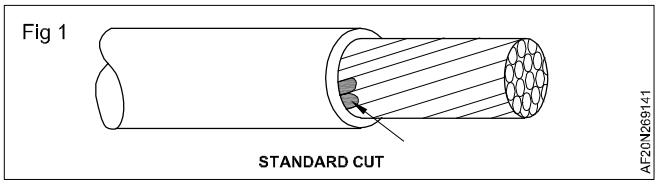

NOT TO BE REPUBLISHED © NIMI

Fig 2

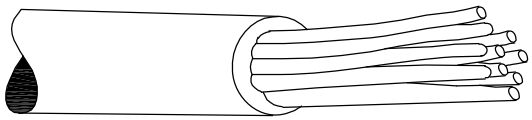

CORE UNSRTANTED AND SPLAYED

AF20N269142

Fig 3

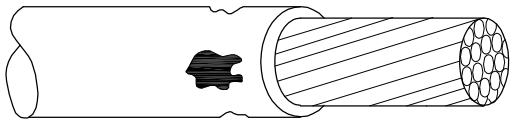

MARK ON INSULATOR (NOTCH, VISIBLE CORE, etc.)

AF20N269143

Fig 4

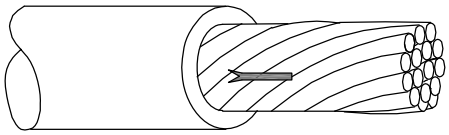

CORE MARKED ALONG A GENERATING LINE

AF20N269144

Fig 5

SUPERFICIAL CONTAINMINATION

AF20N269145

Fig 6

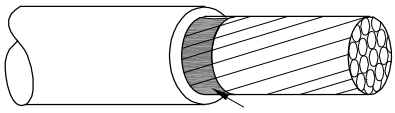

RESIDUAL INSULATION

AF20N269146

Fig 7

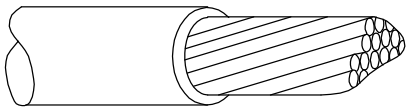

STRANDS CUT OF LINE

AF20N269147

Fig 8

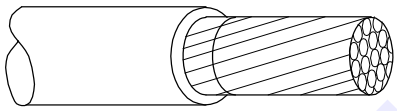

STRANDS MARKED ON THE STRIPPING ZONE

AF20N269148

© NIMI
NOT TO BE REPUBLISHED

Aeronautical shielded cables

Objectives: At the end of this lesson you shall be able to
- **know the composition of shielded cable**
- **Read a shielded cable designation.**

Shielded and jacketed cable (Fig 1)

Fig 1

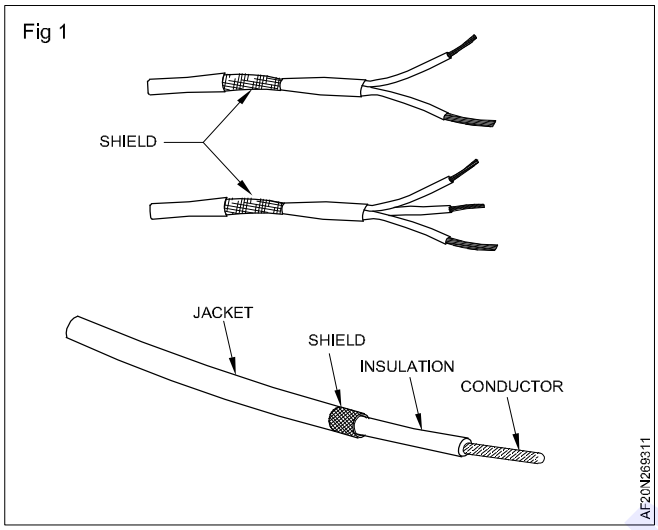

European hook-up and airframe wiring designation

EN 2713 - Shielded and jacketed

EN 2713 - XX Y 00 S

007: CF family
012: Specification Dassault

Number of cores
See table 1

Gauge code
See table 2

F: Single core. For colour code see table 3

EN 2714 - Shielded and jacketed

EN 2714 - XX Y 00 S

011: DM family
013: DR family

Number of cores
See table 1

Gauge code
See table 2

F: Single core. For colour code see table 3

Table 1
Number of core (Y code) and colour code

Code (Y)	Number of core	Colours
B	2	RED / BLUE
C	3	RED / BLUE / YELLOW
D	4	RED / BLUE / YELLOW / GREEN
E	5	RED / BLUE / YELLOW / GREEN / WHITE
F	6	RED / BLUE / YELLOW / GREEN / WHITE / BLACK
G	7	RED / BLUE / YELLOW / GREEN / WHITE / BLACK / BROWN
H	8	RED / BLUE / YELLOW / GREEN / WHITE / BLACK / BROWN / ORANGE
I	9	RED / BLUE / YELLOW / GREEN / WHITE / BLACK / BROWN / ORANGE / VIOLET
J	10	RED / BLUE / YELLOW / GREEN / WHITE / BLACK / BROWN / ORANGE / VIOLET / GREY

Jacket colour (if present):
Gauge codes 002/006/012 (SWG24/20/16), Light Blue.
Other gauges, White.

Table 2

Gauge code

Gauge code	SWG	Nominal cross section (mm^2)
001	26	0.15
002	24	0.25
004	22	0.4
006	20	0.6
010	18	1
012	16	1.2
020	14	2
030	12	3
051	10	5
090	8	9
140	6	14
220	4	22
340	2	34
420	1	42
530	0	53
680	00	67
850	000	85
1070	0000	107

© NIMI NOT TO BE REPUBLISHED

Tble 3
Number of core (Y code) and colour code

Code (Y)	Number of core	Colours
A	1	WHITE **
B	2	RED / BLUE
C	3	RED / BLUE / YELLOW
D	4	RED / BLUE / YELLOW / GREEN
E	5	RED / BLUE / YELLOW / GREEN / WHITE
F	6	RED / BLUE / YELLOW / GREEN / WHITE / BLACK
G	7	RED / BLUE / YELLOW / GREEN / WHITE / BLACK / BROWN
H	8	RED / BLUE / YELLOW / GREEN / WHITE / BLACK / BROWN / ORANGE
I	9	RED / BLUE / YELLOW / GREEN / WHITE / BLACK / BROWN / ORANGE / VIOLET
J	10	RED / BLUE / YELLOW / GREEN / WHITE / BLACK / BROWN / ORANGE / VIOLET / GREY

Jacket colour (if present):

Gauge codes 002/006/012 (SWG24/20/16), Light Blue.

Other gauges, White.

**: Light Green, for gauge code 004 (SWG22) and Light Yellow for gauge code 001 (SWG26)

Tools

Objectives: At the end of this lesson you shall be able to
- **state the tool for stripping shielded cables.**

Scalpels, cutter, cable knife or equivalent

During the stripping operation, to obtain a good stripping quality, the cable must be held at right angles to the blades and the insulation must be removed parallel to the cable axis.

Manual insulation stripping with cutting tools is allowed for:

- cables of cross section above wire gauge 10,
- fire resistant cable insulation,
- screened cables (braided screening or helical screening),
- coaxial cables.

Be very careful when you use these tools. they are sharp and can cut you.

Fig 1

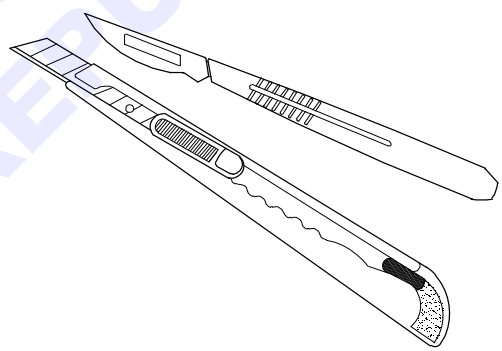

Stripping technique for shielded cables

Objectives: At the end of this lesson you shall be able to
- **know how to strip and prepare shielded cables.**

Single core or multicore screened cables (Fig 1)

The stripping is done several steps:

1 Stripping of the insulation (L stripping length).

The insulation covers the screening.

The stripping length "L" depends on the length required to connect the cable and is given in the topic relevant to the use of each end component.

Tools such as scalpels or scissors are necessary to strip this insulation.

2 If necessary, stripping of the screening (L1 and L2 stripping length).

The cutting length for the screening depends on:

- the electrical function of the cable and of the screening,
- the type of cable,
- the type of end component to be connected to the cable.

In all cases, the length of the screening removed must be as short as possible but sufficient to enable pinning, unpinning and two repairs to be made at the time of the first wiring.

The length must be approximately 50 mm for a screening termination,

© NIMI NOT TO BE REPUBLISHED

Fig 1

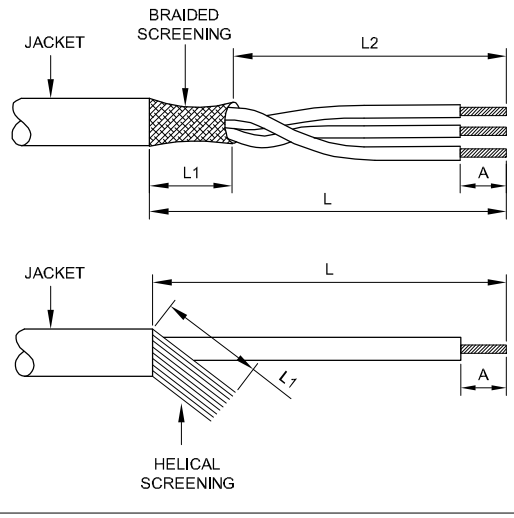

Tools such as scalpels or scissors are necessary.

See below the insulation stripping procedures.

3 Stripping of the conductor(s) (stripping length A)

The miscellaneous stripping lengths are given in the topic relevant to the use of each end component.

The stripping length depends on the length required to connect the wire conductor to the end component and also depends on the dimensions of the end component barrel plus the tolerances of the stripped cable aft of the barrel.

This length "A" is given in the topic relevant to the use of each end component.

The tools necessary to strip depend on the gauge of the wire to be stripped.

Insulation stripping Procedure (Fig 2)

Fig 2

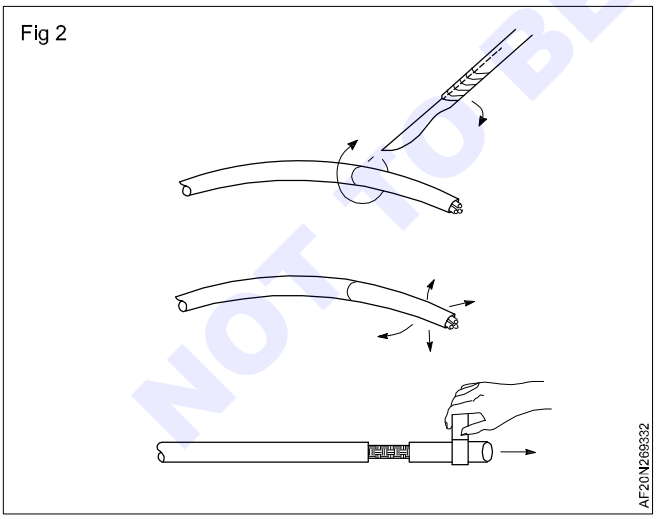

The end of the cable must have a clean cut.

1 Determine the location where the insulation must be cut, using a scalpel, without pressing, make a circular notch on the cable insulation to start cutting the insulation.

2 Fold the cable on the notch to break the insulation.

3 By hand or using a sticky paper or an appropriate tool not to damage the conductor, pinch the cable end on the insulation and remove it.

Cutting flush the insulator (Fig 3)

Fig 3

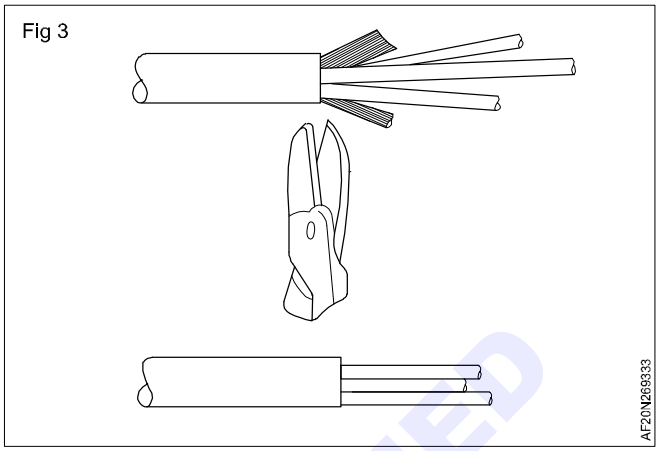

Using scissors, cut the screening flush with the insulator, bring back the strands in the cable direction.

Slide a heat-shrinkable sleeve specified in the wiring documents over the shielding end. (See shrinkable sleeve chapter)

Window type stripping method

Only solder sleeves are to be fitted to this type of stripping.

This stripping method allows the screening pick-up to be stepped more easily in the case of a high number of screened cables:

- Cutting method.
- Sliding method.

Cutting method (Fig 4)

Fig 4

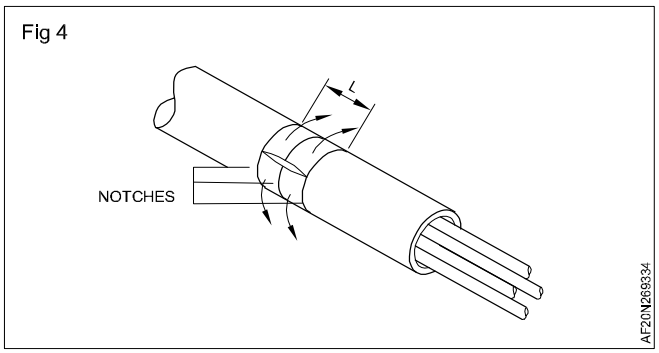

Make 3 circular notches over a length "L" with respect to the sleeves used.

Make a longitudinal notch and remove the pieces of insulation jacket.

The solder sleeve will be moved and positioned on the screening.

Sliding method (Fig 5)

Make a circular notch.

Slide the insulation on the screening over a length "L" and leave it in position.

© NIMI NOT TO BE REPUBLISHED

Fig 5

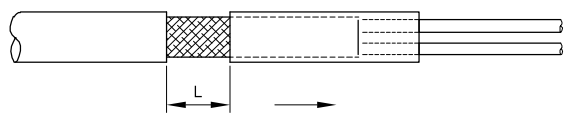

This length "L" depends on the length of the solder sleeve used.

The solder sleeve will be moved and positioned on the screening.

Wrapping and cutting method (Fig 6)

Mechanical ferrules or solder sleeves can be equally fitted to a stripped tubing on a cable end.

After the insulation over a length "L" has been stripped.

L: length necessary, as short as possible but sufficient, for further work (pinning, unpinning, repairs, etc.).

Unwind the braided screening and cut at the length "L1" or wind the helical screening over the length "B".

L1/L2: length with respect to the type of end component (mechanical ferrule, solder sleeve).

The solder sleeve will be moved and positioned on the screening.

Fig 6

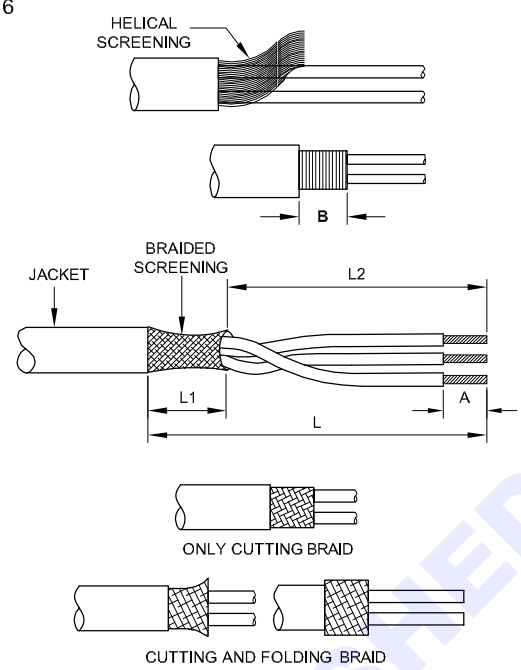

Tools for shrinking elements on shielded cables

Objectives: At the end of this lesson you shall be able to
- **know the tool for shrinking conduit and solder sleeve shielded cables.**

Hot Air Generators (Fig 1)

Fig 1

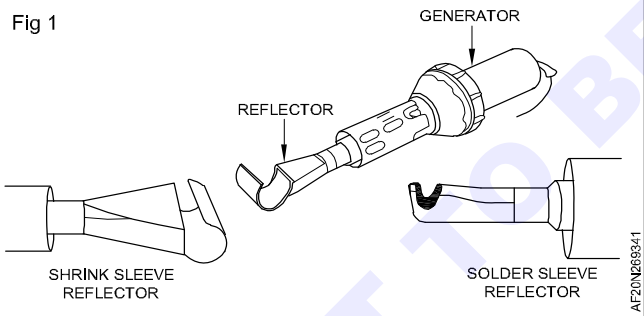

The generators can be used to shrink ends caps, shrinkable sleeves or solder sleeves.

The hot-air tool must have a pre-heating time to be at the set heating temperature. Approximately 1 minute is necessary for this procedure.

Do not start the shrinking process before then.

Use the correct dimensions of reflector to agree with the dimensions of the sleeve.

Put reflector in generator.

Set generator to ON.

The thermoplastic rings melt and the outer sleeve shrinks after a few seconds.

If there is a solder sleeve, continue heating until the solder preform melts. The solder ring can collapse immediately before the flow of solder, but this does not show that the joint is completed.

At this step, remove the sleeve assembly from the heat stream.

Shrinking is completed as the sleeve becomes cool and goes back to its initial color.

To extend the service life of the heating elements, it is recommended to operate the hot-air equipment with cold air for few minutes (refer to the type of equipment) before you set them to off.

Infrared Generators

Generators (Fig 2)

Gun (Fig 3)

Use

Make sure that you always keep the reflectors or mirrors of the infrared generator clean, to make sure that heating, is constant.

Make sure that you always keep the reflectors or mirrors of the infrared generator clean, to make sure that heating is constant.

Put the generator selector in Auto position.

© NIMI NOT TO BE REPUBLISHED

Adjust the generator to agree with the generator type and the sleeve.

Choose the gun and the reflector to agree with the solder sleeve.

Push the reflector trigger and engage the wires and the sleeve in the reflector.

Make sure that the assembly is in the correct position.

Turn the soldering on to the infrared source.

Push the trigger of the infrared gun to start. The gun stops automatically at the end of the cycle.

After 3 to 5 seconds, remove the wire assembly.

Make sure that the solder sleeve is correctly shrunk.

Fig 3

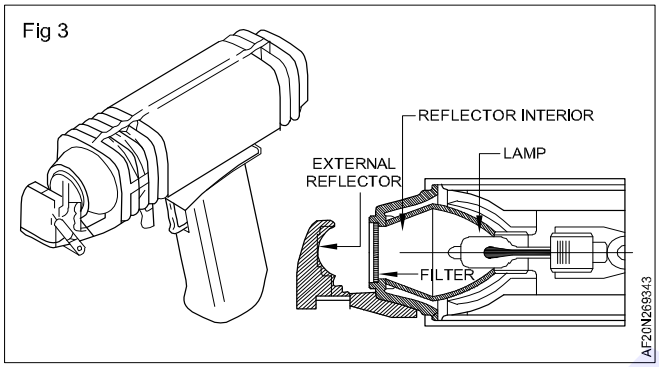

Fig 2

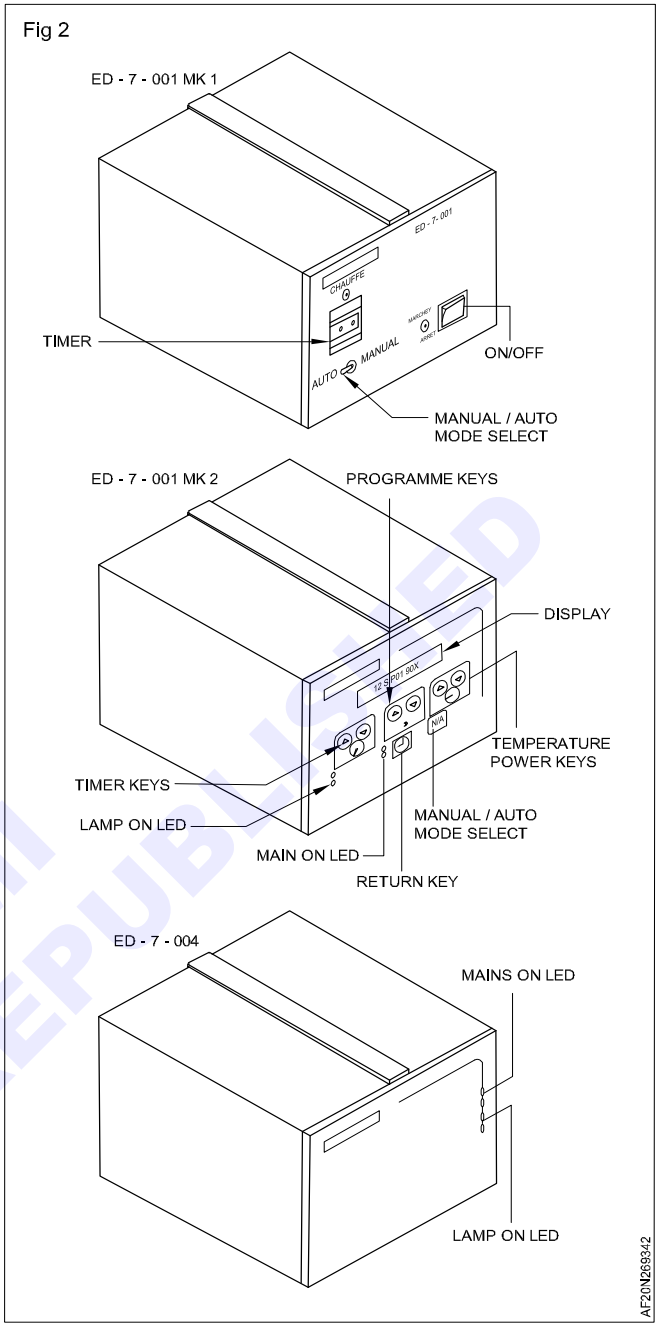

Solder sleeves

Objectives: At the end of this lesson you shall be able to
- **know the composition of solder sleeve**
- **know how to realise solder sleeve.**

Solder sleeve (Fig 1)

Installation Procedure

Move the selected sleeve horizontally along the wire and bonding wire assembly.

Turn the sleeve as it moves along the bonding wire to make sure that it does not catch on the strands.

Centre the solder preforms on the stripped part of the bonding wire and shield.

Install the assembly in the applicable tool without turn it.

Heat the center of the sleeve until the sleeve shrinks.

The solder ring melts and flows into the strands of the bonding wire and shield and the sealing rings melt and flow.

The collapse of the solder ring does not show solder flow. Continue to apply heat until the solder flows into the strands.

Let it become cool for a few seconds before you handle it.

Make sure that the solder sleeve is correctly shrunk.

© NIMI NOT TO BE REPUBLISHED

Fig 1

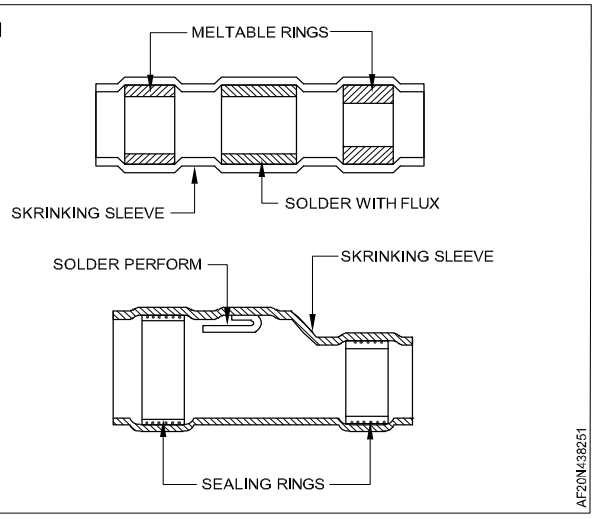

Do a check:

- that there are no balls of solder,
- correct shrinkage of the sleeve (no flaring),
- that there is no overheating,
- that there is no solder rejection. (Fig 2)

Fig 2

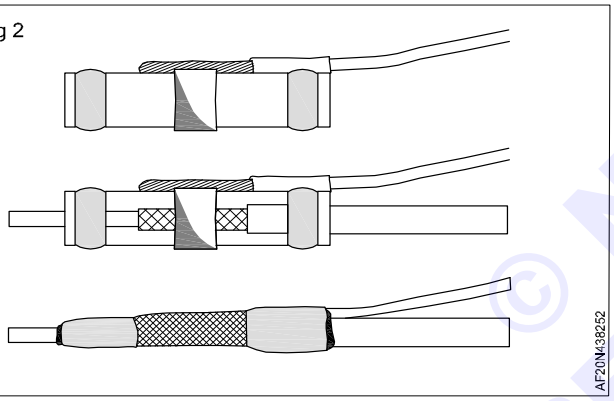

Check

Unacceptable Termination (Insufficient Heat) (Fig 3)

Fig 3

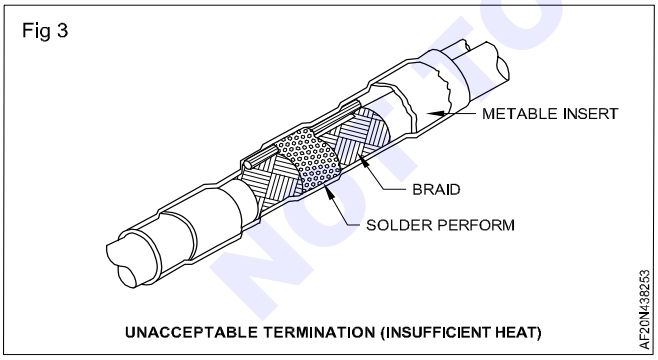

UNACCEPTABLE TERMINATION (INSUFFICIENT HEAT)

The thermal indicator is clearly visible as a dull red colour.

The original shape of the solder preform is clearly visible.

The sealing inserts have not flowed.

The contour of the braid and/or lead is blocked by solder.

Acceptable Termination (Minimum Solder Flow) (Fig 4)

Fig 4

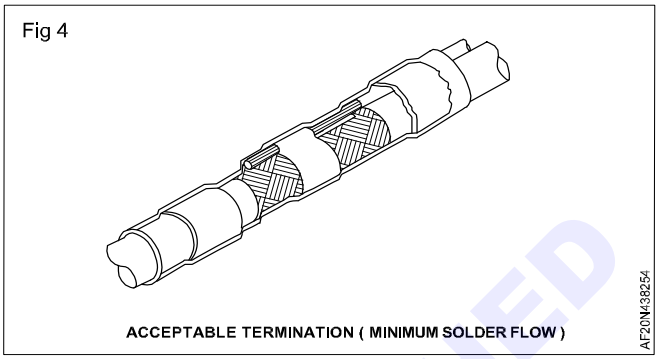

ACCEPTABLE TERMINATION (MINIMUM SOLDER FLOW)

The thermal indicator shows slight traces of dull red colour.

The solder has lost all its original shape.

The sealant inserts have melted and flowed along the wires.

The shield and lead contours are visible.

A definite fillet is visible between lead and shield.

Acceptable Termination (Maximum Solder Flow)

The dull red colour has disappeared from the thermal indicator.

A definite fillet is clearly visible between the lead and shield.

The joint area is visible despite the browning sleeve.

Unacceptable Termination (Overheated)

The joint area is not visible because of severe darkening of the outer sleeve.

The solder fillet is not visible along the lead and shield interface. Wire insulation is damaged outside of the sleeve.

Re-shrink, if necessary, until acceptable conditions exist.

If an overheated condition has occurred, cut out the damaged termination and start the procedure again.

© NIMI NOT TO BE REPUBLISHED

Crimping tools

Objectives: At the end of this lesson you shall be able to
- **know the main tools for crimping normal contacts**
- **know the main tools for crimping terminals**
- **know the main tools for crimping splice**
- **know the main tools for crimping end cap.**

Hand Crimping Tools M22520/2-01

Crimping tools are used to crimp wire gauges 20 thru 26.

Crimp depth can be adjusted by means of an 8-position selector knob.

A positioner is required for proper crimping of contact.

Installation of positioner

1 Tool must be in open position.

2 Remove safety clip from positioner guide.

3 Select correct positioner for contact to be crimped.

4 Insert positioner into positioner guide. Push down and turn 90 degrees until bayonet pins lock.

5 Wire size and corresponding selector numbers are shown on the data plate.

6 With tool in open position, remove spring clip then raise and rotate selector knob until number indicated on data plate for wire size to be crimped is in line with the Selector No. arrow.

Removing positioner

1 Push down on positioner to release bayonet pins from positioner guide. Turn 90 degrees and remove from tool.

Fig 1

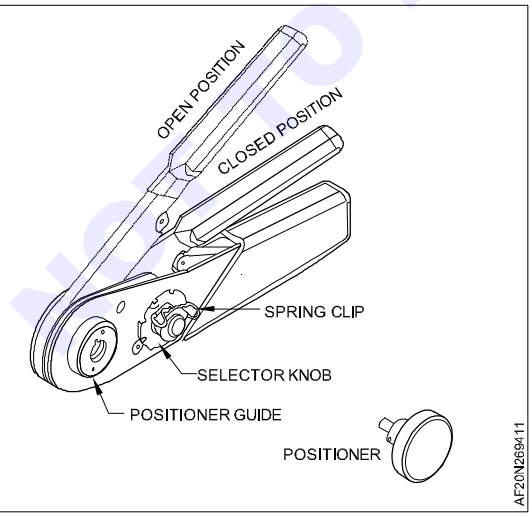

Hand Crimping Tools M22520/1-01

The tool is designed to crimp 26 to 12 gauge wires and incorporates a selector knob numbered from 1 to 8 to adjust the crimping depth.

Crimping is obtained by means of a turret head assembly (or positioner) which must be mounted on the tool.

Installation of positioner

1 Tool must be in open position.

2 Press positioner trigger latch which releases turret to indexing position.

3 Place positioner onto retaining ring with alignment pin in alignment hole.

4 After positioner is seated against retainer ring, tighten socket head screws with 9/64" hexagonal key.

5 Refer to data plate on positioner. From color code column, select the positioner color that corresponds with the appropriate part number and size of contact to be crimped.

6 With tool in open position, rotate until color coded insert is in line with the index mark. Press turret until it snaps in latched position.

7 Refer to data plate. From wire size column, determine the selector setting that corresponds with the contact being used.

8 Remove spring clip from selector knob and rotate until correct setting is in line with selector mark.

Removing positioner

With tool in open position, release turret.

Loosen screws until threads are disengaged from retainer ring and remove with a straight lifting motion.

TOOL MUST BE IN OPEN POSITION WHENEVER POSITIONER IS BEING INSTALLED, REMOVED OR RELEASED.

DAMAGE TO TURRET HEAD AND/OR CRIMP TOOL MAY RESULT IF THIS PROCEDURE IS NOT FOLLOWED.

AMP Hand Crimping Tools

P/N 46121, P/N 47386-X, P/N 47387-X, P/N 48518

Terminal, end cap crimping. (Fig 3)

The handle end colors agree with the color of the terminal to be crimped.

After crimping, make sure that you can see the correct dot code on the terminal barrel. This shows that the tool was correct for the task.

NOT TO BE REPUBLISHED © TIMI

Fig 2

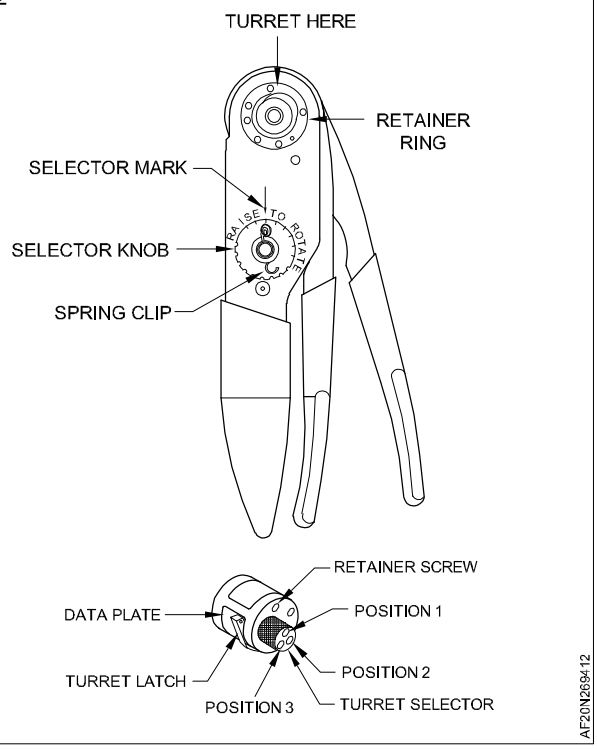

Fig 3

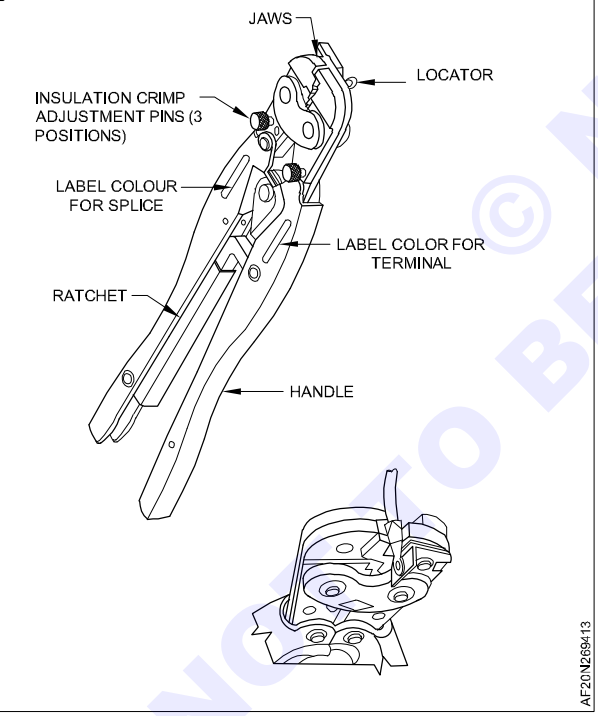

AMP Hand Crimping Tools

P/N 59239-4 or 59239-8

End cap crimping (Fig 4)

The tool color code agrees with the color of the end cap to be crimped.

After crimping, make sure that you can see the correct dot code on the end cap barrel. This shows that the tool was correct for the task.

Fig 4

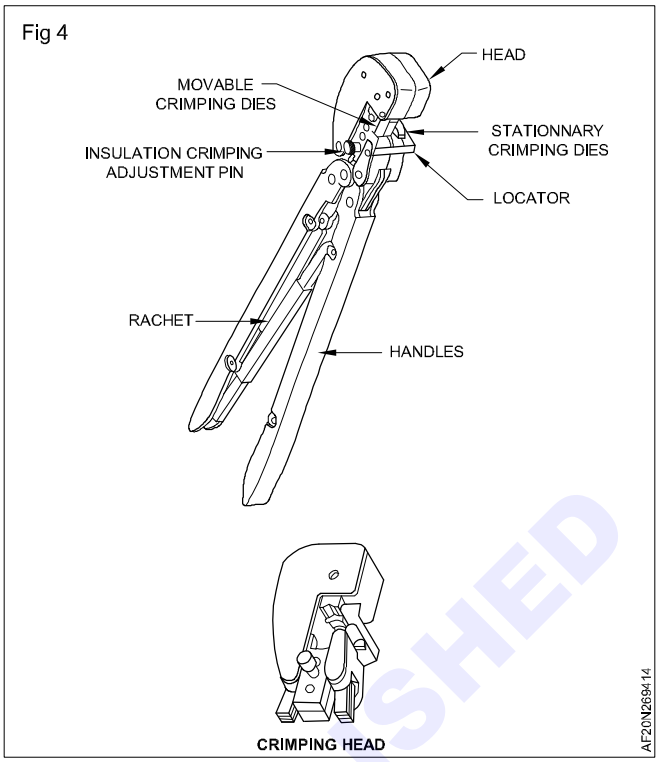

AMP Hand Crimping Tools

P/N 46447 and 49935

***Terminals and splice crimping.* (Fig 5)**

Fig 5

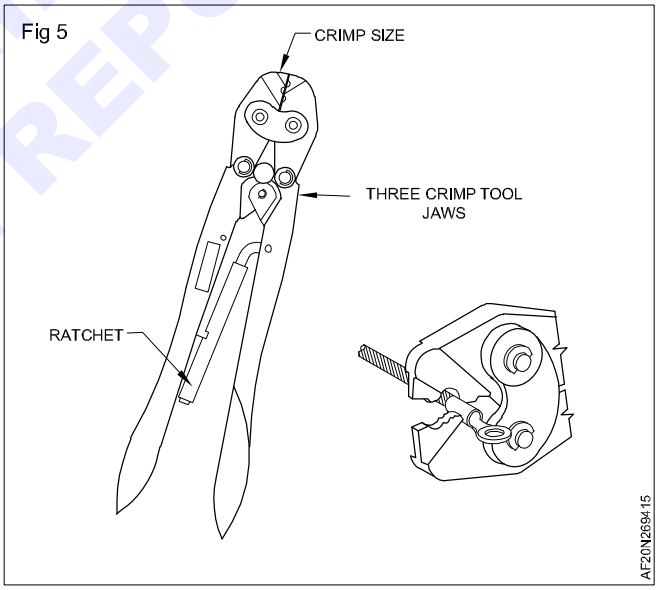

AMP Hand Crimping Tools

P/N 45730, 46467, 46468, 46469 and 46470

***Splice, terminals crimping.* (Fig 6)**

AMP Hand Crimping Tools

P/N 46073, 46074 and 59282

***Splice crimping.* (Fig 7)**

AMP Hand Crimping Tool

P/N 69260-1 and 69272-1

NCVT © NIMI NOT TO BE REPUBLISHED

Fig 6

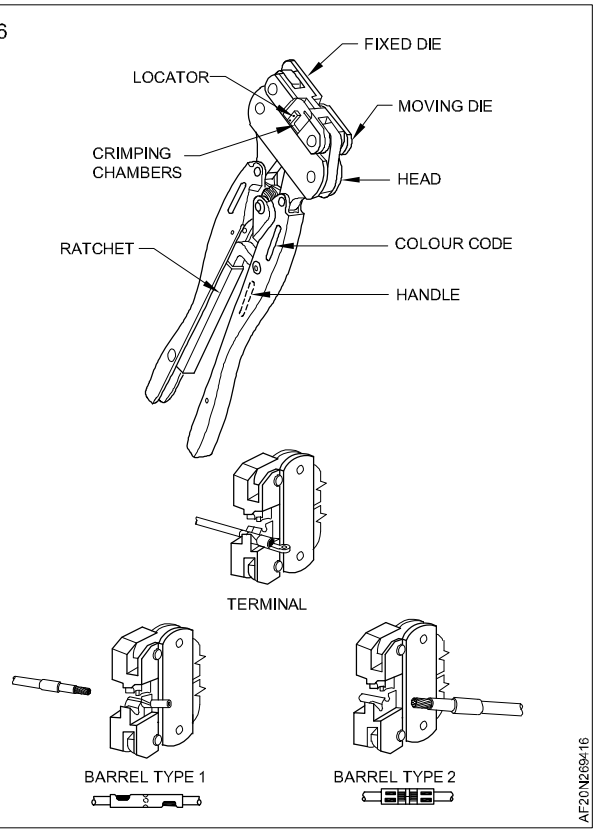

Fig 7

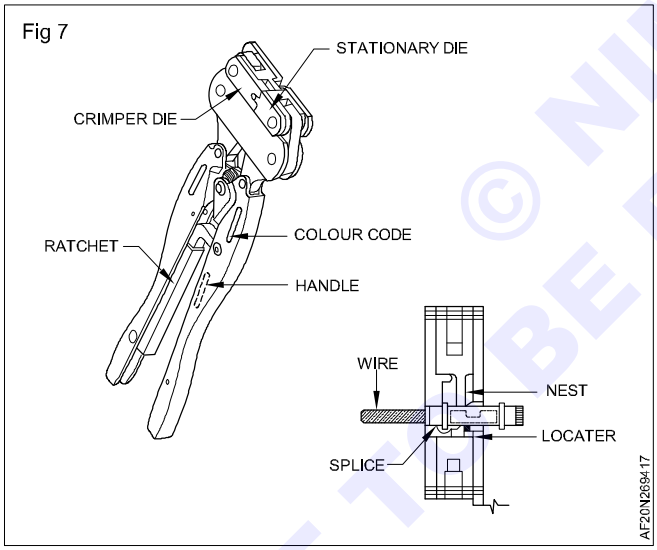

End cap crimping **(Fig 8)**

69260-1

The head of the tool P/N 69260-1 has two crimping areas.

The tool dies and cap rings have a color code for a given wire insulation diameter range.

69272-1

The head of the tool P/N 69272-1 has three crimping areas.

The tool dies and cap rings have a color code for a given wire insulation diameter range.

Fig 8

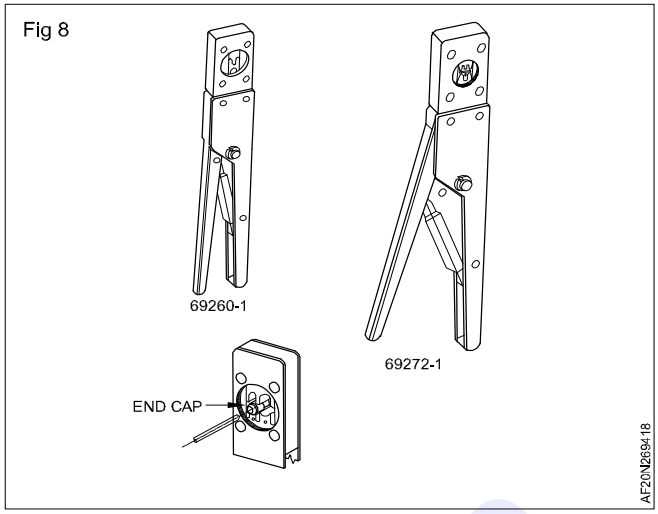

AMP Hand Crimping Tool

P/N 49965

Terminals crimping. (Fig 9)

Fig 9

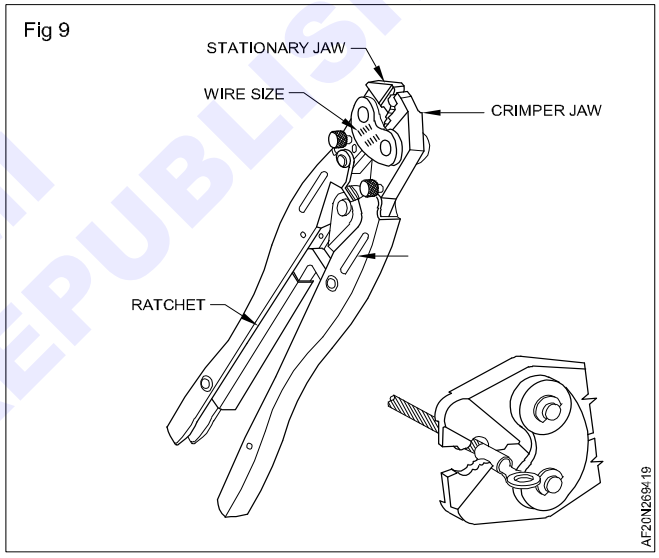

AMP Hand Crimping Tool

P/N 69354-1

Terminals crimping. **(Fig 10)**

AMP Hand Crimping Tools

P/N 576778, 576779, 576780, 484364-1, 576781, 576782, 576783, 576784, 69694-1 and 59461

Terminals crimping. **(Fig 11)**

AMP Hand Crimping Tool

P/N 753898-1

Terminals crimping. **(Fig 12)**

© NIMI NOT TO BE REPUBLISHED

Fig 10

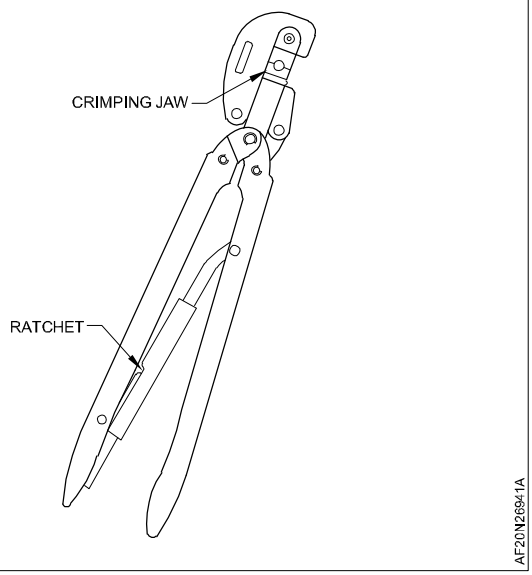

Fig 11

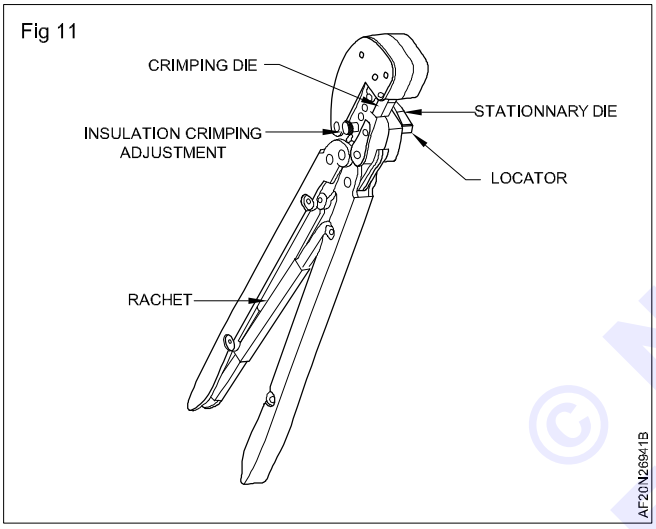

Fig 12

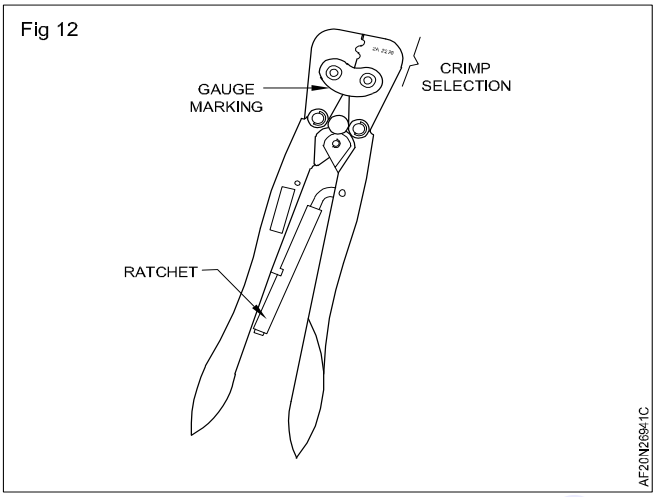

AMP TOOL				WIRE GAUGE
P/N	COLOR CODE (1)	(2)	DOT CODE(*)	
576778	BLACK	BROWN	• •	24-22
576779	VIOLET	GREY	•	20
576780 484364 1	BLACK	ORANGE	• •	18
576781	ORANGE	ORANGE	•	16
576782	BLACK	WHITE	• •	2 GAUGE 18 WIRES
576782	BLACK	WHITE	• •	14
576783	WHITE	WHITE	•	12
576784	BLACK	BLACK	•	10
69694-1	BLACK	-	•	12 OR 10
576784	BLACK	BLACK	•	2X14

© NIMI NOT TO BE REPUBLISHED

Checking before and after crimping

Objectives: At the end of this lesson you shall be able to

- **know the different check before and after crimping.**

Pre-crimping checks

Wire shall be correctly stripped.

Check correct combination of cable, tool, terminal end or connector.

Crimping tool and locator shall be correctly selected.

Before use, every tool shall be checked for:

- Identification (tool serial No.) with its own particular history card.
- Cleanliness of die faces,
- Freedom from damage,
- Freedom from corrosion,
- Freedom from wear.

Tools in regular use shall be cleaned daily to avoid buildup of dirt and plating on die faces.

Care shall be taken not to damage the die faces.

Post-crimping checks

All crimped joints shall conform with the following visual checks:

- Correctness of form and location of crimp,
- Freedom from facture and rough or sharp edges,
- Burrs are inherent in some forms of crimping (These burrs should not be excessive to the extent that they cannot be removed without the use of a tool),
- Crimping indents away from inspection hole,

- Crimping indent correctly centered on the barrel,
- No damage caused on the attaching system, or to the female contact pressure system (for removable contacts)
- Acceptable geometrical distortion, correct die mark,
- Wire visible through inspection hole, if applicable,
- Position of insulation after crimping,
- Position of wire after crimping,
- No strands outside the crimping barrel (and/or extending out the inspection hole),
- No cut strands,
- Adequate insertion of conductor strands in barrel where it is possible to check without damaging conductor,
- Absence of damage to the conductor.

NOTE: It is recommended that each crimp has a gentle manual pull applied in order to establish there is no movement of conductor within the crimp.

Terminal types - Crimped contacts

Objectives: At the end of this lesson you shall be able to
- **name the part of contacts.**
- **know the different types of contacts.**

Crimp contacts

Removable crimp-type contacts conforming to specification SAE-AS39029 and EN3155 are used with the aircraft connectors.

The method of crimping wires to these contacts is essentially the same throughout the entire group of connectors.

There are two main types of contacts, pin and socket.

The locking of the contact in the connector can be done from the front or from the rear.

The front release contacts have a locking groove after the shoulder.

The rear release contacts do not have a locking groove.

An inspection hole makes it possible to check that the wire is correctly stripped.

SAE-AS39029 Contacts (Fig 1)

Contacts will be identified with BIN (basic identification on number) code colour bands. Each digit of the BIN code will be designated on the contact by a colour band in accordance with the following:

- 0 - Black
- 1 - Brown
- 2 - Red
- 3 - Orange
- 4 - Yellow
- 5 - Green
- 6 - Blue
- 7 - Violet
- 8 - Grey
- 9 - White

The table of contact references according to BIN is given below.

EN3155 contacts

EN contacts will be identified with 2 colours bands in accordance with the following.

These coloured bands indicate the gauge of the cable and the size of the barrel.

The table of contact types by standard and matching connectors is given below.

EN3155 designation reading

EN3155-003 F 22 22

Standard number

Type of contact and identification code

F or S: female / socket

M or P: male / pin

Contact size

Barrel size

Fig 1

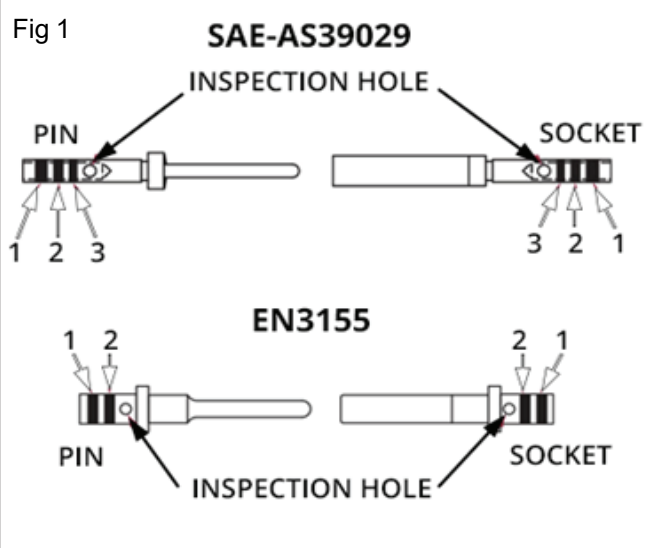

© NIMI NOT TO BE REPUBLISHED

Bin Code	Current Part Number	Superseded Part Number	Pin or Socket
141	M39029/10-141	M39029/10-20-20-C4	S
142	M39029/10-142	M39029/10-20-20-C5	S
144	M39029/11-144	M39029/11-22-22	P
145	M39029/11-145	M39029/11-20-20	P
146	M39029/11-146	M39029/11-16-16	P
147	M39029/11-147	M39029/11-12-12	P
148	M39029/12-148	M39029/12-22-22	S
149	M39029/12-149	M39029/12-20-20	S
150	M39029/12-150	M39029/12-16-16	S
151	M39029/12-151	M39029/12-12-12	S
152	M39029/13-152	M39029/13-01	S
153	M39029/13-153	M39029/13-02	S
154	M39029/13-154	M39029/13-03	S
155	M39029/13-155	M39029/13-04	S
156	M39029/13-156	M39029/13-05	S
157	M39029/13-157	M39029/13-06	S
158	M39029/14-158	M39029/14-01	S
159	M39029/14-159	M39029/14-02	S
160	M39029/14-160	M39029/14-03	S
161	M39029/14-161	M39029/14-04	S
162	M39029/14-162	M39029/14-05	S
163	M39029/14-163	M39029/14-06	S
166	M39029/16-166	M39029/16-23-28	S
167	M39029/16-167	M39029/16-23-22	S
168	M39029/16-168	M39029/16-20-20	S
169	M39029/16-169	M39029/16-16-16	S
170	M39029/16-170	M39029/16-12-12	S
171	M39029/17-171	M39029/17-23-28	S
172	M39029/17-172	M39029/17-23-22	S
173	M39029/17-173	M39029/17-20-20	S
174	M39029/17-174	M39029/17-16-16	S
175	M39029/17-175	M39029/17-12-12	S
176	M39029/18-176	M39029/18-23-28	P
177	M39029/18-177	M39029/18-23-22	P
178	M39029/18-178	M39029/18-20-20	P
179	M39029/18-179	M39029/18-16-16	P
180	M39029/18-180	M39029/18-12-12	P
181	M39029/19-181	M39029/19-01	P
182	M39029/19-182	M39029/19-02	P
183	M39029/19-183	M39029/19-03	P
184	M39029/20-184	M39029/20-01	P
185	M39029/20-185	M39029/20-02	P
186	M39029/20-186	M39029/20-03	P
187	M39029/21-187	M39029/21-01	S
188	M39029/21-188	M39029/21-02	S

© NIMI NOT TO BE REPUBLISHED

Bin Code	Current Part Number	Superseded Part Number	Pin or Socket
100	M39029/1-100	M39029/1-16-22	P
101	M39029/1-101	M39029/1-16-20	P
102	M39029/1-102	M39029/1-14-16	P
103	M39029/1-103	M39029/1-12-12	P
104	M39029/2-104	M39029/2-22-22	P
105	M39029/2-105	M39029/2-20-20	P
106	M39029/2-106	M39029/2-16-16	P
107	M39029/3-107	M39029/3-22-22	S
108	M39029/3-108	M39029/3-20-20	S
109	M39029/3-109	M39029/3-16-16	S
110	M39029/4-110	M39029/4-20-20	P
		M83723-33B20	P
111	M39029/4-111	M39029/4-16-16	P
		M83723-33B16	P
112	M39029/4-112	M39029/4-16-20	P
113	M39029/4-113	M39029/4-12-12	P
		M83723-33B12	P
114	M39029/4-114	M39029/4-12-16	P
115	M39029/5-115	M39029/5-20-20	S
		M83723-34B20	S
116	M39029/5-116	M39029/5-16-16	S
		M83723-34B16	S
117	M39029/5-117	M39029/5-16-20	S
118	M39029/5-118	M39029/5-12-12	S
		M83723-34B12	S
119	M39029/5-119	M39029/5-12-16	S
120	M39029/6-120	M39029/6-01	P
121	M39029/6-121	M39029/6-02	P
122	M39029/6-122	M39029/6-03	P
123	M39029/6-123	M39029/6-04	P
124	M39029/6-124	M39029/6-05	P
125	M39029/6-125	M39029/6-06	P
126	M39029/7-126	M39029/7-001	P
127	M39029/7-127	M39029/7-002	P
128	M39029/7-128	M39029/7-003	P
129	M39029/8-129	M39029/8-001	S
130	M39029/8-130	M39029/8-002	S
131	M39029/8-131	M39029/8-003	S
132	M39029/9-132	M39029/9-20-20-C1	P
133	M39029/9-133	M39029/9-20-20-C2	P
134	M39029/9-134	M39029/9-20-20-C3	P
135	M39029/9-135	M39029/9-20-20-C4	P
136	M39029/9-136	M39029/9-20-20-C5	P
138	M39029/10-138	M39029/10-20-20-C1	S
139	M39029/10-139	M39029/10-20-20-C2	S
140	M39029/10-140	M39029/10-20-20-C3	S

© NIMI NOT TO BE REPUBLISHED

Bin Code	Current Part Number	Superseded Part Number	Pin or Socket
189	M39029/21-189	M39029/21-03	S
190	M39029/22-190	M39029/22-22-28	S
		M39029/15-22-28	S
191	M39029/22-191	M39029/22-22-22	S
		M39029/15-22-22	S
192	M39029/22-192	M39029/22-20-20	S
193	M39029/22-193	M39029/22-16-16	S
194	M39029/23-194	M39029/23-01	P
195	M39029/23-195	M39029/23-02	P
196	M39029/23-196	M39029/23-02	P
197	M39029/23-197	M39029/23-04	P
198	M39029/23-198	M39029/23-05	P
199	M39029/24-199	M39029/24-01	S
200	M39029/24-200	M39029/24-02	S
201	M39029/24-201	M39029/24-03	S
202	M39029/24-202	M39029/24-04	S
203	M39029/24-203	M39029/24-05	S
204	M39029/25-204	M39029/25-01	P
205	M39029/25-205	M39029/25-02	P
206	M39029/25-206	M39029/25-03	P
207	M39029/26-207	M39029/26-01	S
208	M39029/26-208	M39029/26-02	S
209	M39029/26-209	M39029/26-03	S
210	M39029/27-210	M39029/27-12A	S
211	M39029/28-211	M39029/28-12A	P
212	M39029/29-212	M39029/29-16-16	P
		M83723-29T16	P
		M53162-16-16	P
213	M39029/29-213	M39029/29-12-12	P
		M83723-29T12	P
		M53162-12-12	P
214	M39029/29-214	M39029/29-8-8	P
		M83723-29T8	P
		M53162-8-8	P
215	M39029/29-215	M39029/29-4-4	P
		M83723-29T4	P
		M53162-4-4	P
216	M39029/29-216	M39029/29-0-0	P
		M83723-29T0	P
		M53162-0-0	P
217	M39029/30-217	M39029/30-16S-16	S
		M83723-30T16	S
		M53163-16S-16	S
218	M39029/30-218	M39029/30-16-16	S
		M83723-30T16	S
		M53163-16-16	S

© NIMI NOT TO BE REPUBLISHED

Bin Code	Current Part Number	Superseded Part Number	Pin or Socket
219	M39029/30-219	M39029/30-12-12	S
		M83723-30T12	S
		M53163-12-12	S
220	M39029/30-220	M39029/30-8-8	S
		M83723-30T8	S
		M53163-8-8	S
221	M39029/30-221	M39029/30-4-4	S
		M83723-30T4	S
		M53163-4-4	S
222	M39029/30-222	M39029/30-0-0	S
		M83723-30T0	S
		M53163-0-0	S
223	M39029/31-223	MS3192-20-20A	P
224	M39029/31-224	MS3192-20-20C4	P
225	M39029/31-225	MS3192-20-20C1	P
226	M39029/31-226	MS3192-20-20C2	P
227	M39029/31-227	MS3192-20-20C3	P
228	M39029/31-228	MS3192-16-16A	P
229	M39029/31-229	MS24254-16P	P
230	M39029/31-230	MS3192-16-16C4	P
231	M39029/31-231	MS3192-16-16C1	P
232	M39029/31-232	MS3192-16-16C2	P
233	M39029/31-233	MS3192-16-16C3	P
234	M39029/31-234	MS3192-12-12A	P
235	M39029/31-235	MS24254-12P	P
236	M39029/31-236	MS3192-12-12C4	P
237	M39029/31-237	MS3192-12-12C1	P
238	M39029/31-238	MS3192-12-12C2	P
239	M39029/31-239	MS3192-12-12C3	P
240	M39029/31-240	MS3192-A20-20A	P
241	M39029/31-241	MS24254-20P	P
242	M39029/32-242	MS3193-20-20A	S
243	M39029/32-243	MS3193-20-20C4	S
244	M39029/32-244	MS3193-20-20C1	S
245	M39029/32-245	MS3193-20-20C2	S
246	M39029/32-246	MS3193-20-20C3	S
247	M39029/32-247	MS3193-16-16A	S
248	M39029/32-248	MS24255-16S	S
249	M39029/32-249	MS3193-16-16C4	S
250	M39029/32-250	MS3193-16-16C1	S
251	M39029/32-251	MS3193-16-16C2	S
252	M39029/32-252	MS3193-16-16C3	S
253	M39029/32-253	MS3193-12-12A	S
254	M39029/32-254	MS24255-12S	S
255	M39029/32-255	MS3193-12-12C4	S
256	M39029/32-256	MS3193-12-12C1	S

NOT TO BE REPUBLISHED © NIMI

Bin Code	Current Part Number	Superseded Part Number	Pin or Socket
257	M39029/32-257	MS3193-12-12C2	S
258	M39029/32-258	MS3193-12-12C3	S
259	M39029/32-259	MS3193-A20-20A	S
260	M39029/32-260	MS24255-20S	S
261	M39029/33-261	MS3343A23-28	S
262	M39029/33-262	MS3343B23-28	S
263	M39029/33-263	MS3343A23-22	S
264	M39029/33-264	MS3343B23-22	S
265	M39029/33-265	MS3343A20-20	S
266	M39029/33-266	MS3343B20-20	S
267	M39029/33-267	MS3343A16-16	S
268	M39029/33-268	MS3343B16-16	S
269	M39029/33-269	MS3343A12-12	S
270	M39029/33-270	MS3343B12-12	S
271	M39029/34-271	MS17803-20-20	P
272	M39029/34-272	MS17803-16-20	P
273	M39029/34-273	MS17803-16-16	P
274	M39029/35-274	MS17804-20-20	S
275	M39029/35-275	MS17804-16-20	S
276	M39029/35-276	MS17804-16-16	S
277	MS39029/36-277	MS17807-16-20	P
278	MS39029/36-278	MS17807-16-16	P
279	MS39029/36-279	MS17808-16-20	S
280	MS39029/37-280	MS17808-16-16	S
287	MS39029/44-287	MS90453-16-22	P
288	MS39029/44-288	MS90453-16-16	P
289	MS39029/44-289	MS90453-12-16	P
290	MS39029/44-290	MS90453-12-12	P
291	MS39029/44-291	MS90453-8-8	P
292	MS39029/44-292	MS90453-4-4	P
293	MS39029/44-293	MS90453-0-0	P
294	MS39029/45-294	MS90454-16-22	S
295	MS39029/45-295	MS90454-16-16	S
296	MS39029/45-296	MS90454-12-16	S
297	MS39029/45-297	MS90454-12-12	S
298	MS39029/45-298	MS90454-8-8	S
299	MS39029/45-299	MS90454-4-4	S
300	MS39029/45-300	MS90454-0-0	S
301	M39029/46-301	MS90460A23-28	S
302	M39029/46-302	MS90460B23-28	S
303	M39029/46-303	MS90460A23-22	S
304	M39029/46-304	MS90460B23-22	S
305	M39029/46-305	MS90460A20-20	S
306	M39029/46-306	MS90460B20-20	S
307	M39029/46-307	MS90460A16-16	S
308	M39029/46-308	MS90460B16-16	S
309	M39029/46-309	MS90460A12-12	S

NOT TO BE REPUBLISHED © NIMI

Bin Code	Current Part Number	Superseded Part Number	Pin or Socket
310	M39029/46-310	MS90460B12-12	S
311	M39029/47-311	MS90461-A23-28	P
312	M39029/47-312	MS90461-B23-28	P
313	M39029/47-313	MS90461-A23-22	P
314	M39029/47-314	MS90461-B23-22	P
315	M39029/47-315	MS90461-A20-20	P
316	M39029/47-316	MS90461-B20-20	P
317	M39029/48-317	MS90559-11	P
318	M39029/48-318	MS90559-12	P
319	M39029/48-319	MS90559-14	P
320	M39029/48-320	MS90559-8	P
321	M39029/48-321	MS90559-9	P
322	M39029/48-322	MS90559-13	P
323	M39029/48-323	MS90559-5	P
324	M39029/48-324	MS90559-6	P
325	M39029/48-325	MS90559-3	P
326	M39029/48-326	MS90559-4	P
327	M39029/48-327	MS90559-1	P
328	M39029/48-328	MS90559-2	P
329	M39029/49-329	MS90560-7	S
330	M39029/49-330	MS90560-8	S
331	M39029/49-331	MS90560-5	S
332	M39029/49-332	MS90560-9	S
333	M39029/49-333	MS90560-3	S
334	M39029/49-334	MS90560-2	S
335	M39029/49-335	MS90560-1	S
336	M39029/47-336	MS90461-A16-16	P
337	M39029/47-337	MS90461-B16-16	P
338	M39029/47-338	MS90461-A12-12	P
339	M39029/47-339	MS90461-B12-12	P
340	M39029/50-340	N83733/13-12	P
341	M39029/51-341	N83733/14-12	S
342	M39029/54-342	MS27184-22P	P
343	M39029/54-343	MS27184-20P	P
344	M39029/55-344	MS27185-22S	S
345	M39029/55-345	MS27185-20S	S
348	M39029/56-348	MS27490-22D	S
349	M39029/56-349	MS27490-22M	S
350	M39029/56-350	MS27490-22	S
351	M39029/56-351	MS27490-20	S
352	M39029/56-352	MS27490-16	S
353	M39029/56-353	MS27490-12	S
354	M39029/57-354	MS27491-22D	S
355	M39029/57-355	MS27491-22M	S
356	M39029/57-356	MS27491-22	S
357	M39029/57-357	MS27491-20	S
358	M39029/57-358	MS27491-16	S

© NIMI NOT TO BE REPUBLISHED

Bin Code	Current Part Number	Superseded Part Number	Pin or Socket
359	M39029/57-359	MS27491-12	S
360	M39029/58-360	MS27493-22D	P
361	M39029/58-361	MS27493-22M	S
362	M39029/58-362	MS27493-22	S
363	M39029/58-363	MS27493-20	S
364	M39029/58-364	MS27493-16	P
365	M39029/58-365	MS27493-12	P
366	M39029/59-366	MS27535	P
367	M39029/60-367	MS27536	P
368	M39029/63-368	MS24308/10-1	P
369	M39029/64-369	MS24308/11-1	P
384	M39029/69-384	M39029/69-1	P
385	M39029/69-385	M39029/69-2	P
386	M39029/69-386	M39029/69-3	P
387	M39029/70-387	M39029/70-1	P
388	M39029/70-388	M39029/70-2	P
389	M39029/70-389	M39029/70-3	P
390	M39029/71-390	M39029/71-1	P
391	M39029/71-391	M39029/71-2	P
392	M39029/71-392	M39029/71-3	P
393	M39029/72-393	M39029/72-1	S
394	M39029/72-394	M39029/72-2	S
395	M39029/72-395	M39029/72-3	S
396	M39029/73-396	M39029/73-12A	S
397	M39029/73-397	M39029/73-12B	S
398	M39029/73-398	M39029/73-12C	S
399	M39029/74-399	M39029/74-12A	P
400	M39029/74-400	M39029/74-12B	P
401	M39029/74-401	M39029/74-12C	P
402	M39029/27-402	M39029/27-12B	S
403	M39029/27-403	M39029/27-12C	S
404	M39029/27-404	M39029/27-12D	S
405	M39029/27-405	M39029/27-12E	S
406	M39029/27-406	M39029/27-12F	S
407	M39029/27-407	M39029/27-12G	S
408	M39029/27-408	M39029/27-12H	S
409	M39029/28-409	M39029/28-12B	P
410	M39029/28-410	M39029/28-12C	P
411	M39029/28-411	M39029/28-12D	P
412	M39029/28-412	M39029/28-12E	P
413	M39029/28-413	M39029/28-12F	P
414	M39029/28-414	M39029/28-12G	P
415	M39029/28-415	M39029/28-12H	P
416	M39029/75-416	M39029/75-12A	S
417	M39029/75-417	M39029/75-12B	S
418	M39029/75-418	M39029/75-12C	S
419	M39029/75-419	M39029/75-12D	S

© NIMI NOT TO BE REPUBLISHED

Bin Code	Current Part Number	Superseded Part Number	Pin or Socket
420	M39029/75-420	M39029/75-12E	S
421	M39029/75-421	M39029/75-12F	S
422	M39029/75-422	M39029/75-12G	S
423	M39029/75-423	M39029/75-12H	S
424	M39029/76-424	M39029/76-16A	P
425	M39029/76-425	M39029/76-16B	P
426	M39029/76-426	M39029/76-16C	P
427	M39029/76-427	M39029/76-16D	P
428	M39029/77-428	M39029/77-16A	S
429	M39029/77-429	M39029/77-16B	S
430	M39029/77-430	M39029/77-16C	S
431	M39029/77-431	M39029/77-16D	S
432	M39029/78-432	M39029/78-16A	S
433	M39029/78-433	M39029/78-16B	S
434	M39029/78-434	M39029/78-16C	S
435	M39029/78-435	M39029/78-16D	S
436	M39029/79-436	M39029/79-16A	P
437	M39029/79-437	M39029/79-16B	P
438	M39029/80-438	M39029/80-16A	S
439	M39029/80-439	M39029/80-16B	S
440	M39029/34-440	M39029/34-22-22	P
441	M39029/35-441	M39029/35-22-22	S
448	M39029/31-448	M39029/31-20-20	P
449	M39029/32-449	M39029/32-20-20	S
450	M39029/83-450	M39029/83-20-22	P
451	M39029/83-451	M39029/83-20-28	P
452	M39029/84-452	M39029/84-20-22	S
453	M39029/84-453	M39029/84-20-28	S
454	M39029/85-454	M39029/85-16-16-C1	P
455	M39029/85-455	M39029/85-16-16-C2	P
456	M39029/85-456	M39029/85-16-16-C3	P
457	M39029/85-457	M39029/85-16-16-C4	P
458	M39029/85-458	M39029/85-12-12-C1	P
459	M39029/85-459	M39029/85-12-12-C2	P
460	M39029/85-460	M39029/85-12-12-C3	P
461	M39029/85-461	M39029/85-12-12-C4	P
462	M39029/86-462	M39029/86-16-16-C1	S
463	M39029/86-463	M39029/86-16-16-C2	S
464	M39029/86-464	M39029/86-16-16-C3	S
465	M39029/86-465	M39029/86-16-16-C4	S
466	M39029/86-466	M39029/86-12-12-C1	S
467	M39029/86-467	M39029/86-12-12-C2	S
468	M39029/86-468	M39029/86-12-12-C3	S
469	M39029/86-469	M39029/86-12-12-C4	S
470	M39029/87-470	M39029/87-22-22-C1	P
471	M39029/87-471	M39029/87-22-22-C2	P
472	M39029/87-472	M39029/87-22-22-C3	P

© NIMI NOT TO BE REPUBLISHED

Bin Code	Current Part Number	Superseded Part Number	Pin or Socket
473	M39029/87-473	M39029/87-22-22-C4	P
474	M39029/87-474	M39029/87-20-20-C1	P
475	M39029/87-475	M39029/87-20-20-C2	P
476	M39029/87-476	M39029/87-20-20-C3	P
477	M39029/87-477	M39029/87-20-20-C4	P
478	M39029/87-478	M39029/87-16-16-C1	P
479	M39029/87-479	M39029/87-16-16-C2	P
480	M39029/87-480	M39029/87-16-16-C3	P
481	M39029/87-481	M39029/87-16-16-C4	P
482	M39029/88-482	M39029/88-22-22-C1	S
483	M39029/88-483	M39029/88-22-22-C2	S
484	M39029/88-484	M39029/88-22-22-C3	S
485	M39029/88-485	M39029/88-22-22-C4	S
486	M39029/88-486	M39029/88-20-20-C1	S
487	M39029/88-487	M39029/88-20-20-C2	S
488	M39029/88-488	M39029/88-20-20-C3	S
489	M39029/88-489	M39029/88-20-20-C4	S
490	M39029/88-490	M39029/88-16-16-C1	S
491	M39029/88-491	M39029/88-16-16-C2	S
492	M39029/88-492	M39029/88-16-16-C3	S
493	M39029/88-493	M39029/88-16-16-C4	S
494	M39029/89-494	M39029/89-22-22-C1	S
495	M39029/89-495	M39029/89-22-22-C2	S
496	M39029/89-496	M39029/89-22-22-C3	S
497	M39029/89-497	M39029/89-22-22-C4	S
498	M39029/89-498	M39029/89-20-20-C1	S
499	M39029/89-499	M39029/89-20-20-C2	S
500	M39029/89-500	M39029/89-20-20-C3	S
501	M39029/89-501	M39029/89-20-20-C4	S
502	M39029/89-502	M39029/89-16-16-C1	S
503	M39029/89-503	M39029/89-16-16-C2	S
504	M39029/89-504	M39029/89-16-16-C3	S
505	M39029/89-505	M39029/89-16-16-C4	S
506	M39029/89-506	------	S
507	M39029/89-507	M39029//-20-22D	S
508	M39029/83-508	------	P
509	M39029/84-509	------	S
528	M39029/58-528	------	P
529	M39029/90-529	------	S

© NIMI NOT TO BE REPUBLISHED

Contacts								Elements of connection														
Designation EN 3155-	Temperature °C	Types						Relay base			Circuit breakers		Connectors									
		Crimped	Soldered	Self-locking	Wrapped wire	Coaxial	Triaxial	EN 2593	EN 3205	EN 3206	EN 2995	EN 2996	EN 2997	EN 3218	EN 3372	EN 3545	EN 3645	EN 3646	EN 3682	EN 3708	EN 4067	EN 6047
018M2022	200	X											X					X				
018M2020	200	X											X					X				
018M2018	200	X											X					X				
018M1616	200	X											X					X				
018M1614	200	X											X					X				
018M1618	200	X											X					X				
018M1212	200	X											X					X				
018M1218	200	X											X					X				
019F2022	200	X											X					X				
019F2020	200	X											X					X				
019F2018	200	X											X					X				
019F1616	200	X											X					X				
019F1614	200	X											X					X				
019F1618	200	X											X					X				
019F1212	200	X											X					X				
019F1218	200	X											X					X				
020M10	150	X					X						X									
021F10	150	X					X						X									
022M2220	150	X												X								
023F2220	150	X												X								
024M08	150	X					X								X		X					
025F08	150	X					X								X		X					
026M2222	150	X																	X			
026M2020	150	X																	X			
026M1616	150	X																	X			
026M1212	150	X																	X			
027F2222	150	X																	X			
027F2022	150	X																	X			
027F2020	150	X																	X			
027F1616	150	X																	X			
027F1212	150	X																	X			
028M16	150	X				X													X			
029F16	150	X				X													X			
030M12	150	X				X													X			
031F12	150	X				X													X			
032M05 [b]	150	X				X													X			
033F05 [b]	150	X				X													X			
034M08 [b]	150	X					X												X			
035F08 [b]	150	X					X												X			
036F22	150			X															X			
039F16 [b]	150		X			X													X			
040M12 [b]	150		X			X													X			
041F12 [b]	150		X			X													X			
042M08 [b]	150		X				X												X			
043F08 [b]	150		X				X												X			
044M2022	260	X											X									
045F2022	260	X											X									
046M2022	200	X															X					
047F2022	200	X															X					
052M4A2A	200	X																				X
053F4A2A	200	X																				X
054M2020	260	X											X								X	
054M2018	260	X											X								X	
054M1616	260	X											X								X	
054M1618	260	X											X								X	
055F2020	260	X											X								X	
055F2018	260	X											X								X	
055F1616	260	X											X								X	
055F1618	260	X											X								X	
055M2020	260	X											X								X	
056M2018	260	X											X								X	
056M1616	260	X											X								X	
056M1618	260	X											X								X	
057F2020	260	X											X								X	
057F2018	260	X											X								X	
057F1616	260	X											X								X	
057F1618	260	X											X								X	
058M16 [b]	150		X			X									X		X					
059F16 [b]	150		X			X									X		X					
060M12 [b]	150		X			X									X		X					
062F12 [b]	150		X			X									X		X					
062F2020 [a]	125	X							X													

© NIMI NOT TO BE REPUBLISHED

Contacts								Elements of connection														
Designation EN 3155-	Temperature °C	Types						Relay base			Circuit breakers		Connectors									
		Crimped	Soldered	Self-locking	Wrapped wire	Coaxial	Triaxial	EN 2593	EN 3205	EN 3206	EN 2995	EN 2996	EN 2997	EN 3218	EN 3372	EN 3545	EN 3645	EN 3646	EN 3682	EN 3708	EN 4067	EN 6047
018M2022	200	X											X					X				
018M2020	200	X											X					X				
018M2018	200	X											X					X				
018M1616	200	X											X					X				
018M1614	200	X											X					X				
018M1618	200	X											X					X				
018M1212	200	X											X					X				
018M1218	200	X											X					X				
019F2022	200	X											X					X				
019F2020	200	X											X					X				
019F2018	200	X											X					X				
019F1616	200	X											X					X				
019F1614	200	X											X					X				
019F1618	200	X											X					X				
019F1212	200	X											X					X				
019F1218	200	X											X					X				
020M10	150	X					X						X									
021F10	150	X					X						X									
022M2220	150	X												X								
023F2220	150	X												X								
024M08	150	X					X								X		X					
025F08	150	X					X								X		X					
026M2222	150	X																	X			
026M2020	150	X																	X			
026M1616	150	X																	X			
026M1212	150	X																	X			
027F2222	150	X																	X			
027F2022	150	X																	X			
027F2020	150	X																	X			
027F1616	150	X																	X			
027F1212	150	X																	X			
028M16	150	X				X													X			
029F16	150	X				X													X			
030M12	150	X				X													X			
031F12	150	X				X													X			
032M05 [b]	150	X				X													X			
033F05 [b]	150	X				X													X			
034M08 [b]	150	X					X												X			
035F08 [b]	150	X					X												X			
036F22	150			X															X			
039F16 [b]	150		X			X													X			
040M12 [b]	150		X			X													X			
041F12 [b]	150		X			X													X			
042M08 [b]	150		X				X												X			
043F08 [b]	150		X				X												X			
044M2022	260	X											X									
045F2022	260	X											X									
046M2022	200	X															X					
047F2022	200	X															X					
052M4A2A	200	X																				X
053F4A2A	200	X																				X
054M2020	260	X											X								X	
054M2018	260	X											X								X	
054M1616	260	X											X								X	
054M1618	260	X											X								X	
055F2020	260	X											X								X	
055F2018	260	X											X								X	
055F1616	260	X											X								X	
055F1618	260	X											X								X	
055M2020	260	X											X								X	
056M2018	260	X											X								X	
056M1616	260	X											X								X	
056M1618	260	X											X								X	
057F2020	260	X											X								X	
057F2018	260	X											X								X	
057F1616	260	X											X								X	
057F1618	260	X											X								X	
058M16 [b]	150		X			X									X		X					
059F16 [b]	150		X			X									X		X					
060M12 [b]	150		X			X									X		X					
062F12 [b]	150		X			X									X		X					
062F2020 [a]	125	X							X													

NOT TO BE REPUBLISHED © NIMI

Terminal types - Crimped contacts

Objectives: At the end of this lesson you shall be able to
- **Know the different types of terminals lugs.**

Definitions

Terminal

Metal wire termination devices designed to handle one or more conductors, and to be attached to a board, bus, or block with mechanical fasteners, or clipped on.

Types are ring, tongue, spade, flag, hook, blade, quick-connect, off-set, flanged, etc.

Special types include taper pin, taper tab, and others, either insulated or non-insulated.

Terminal lug

Device designed to be affixed, usually at one end, to a post, stud, chassis, or similar device, and with provision for attachment of an electrical conductor(s) in order to establish an electrical connection.

Copper wire terminals

Copper wire terminals installed on aircraft:

- High temperature flag terminal (Fig 1)

Fig 1

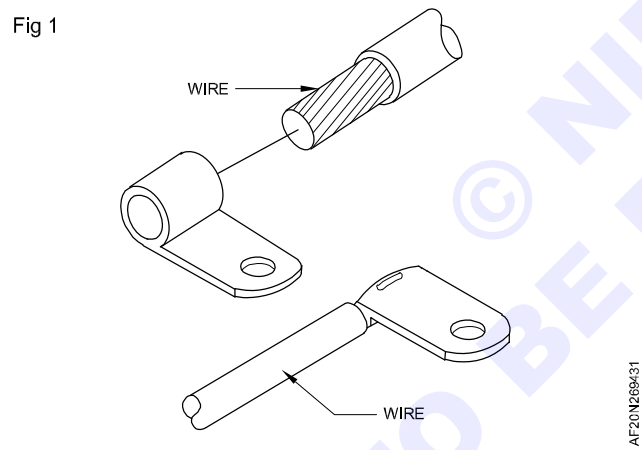

- Nylon terminal -P.I.D.G. (Fig 2)

Fig 2

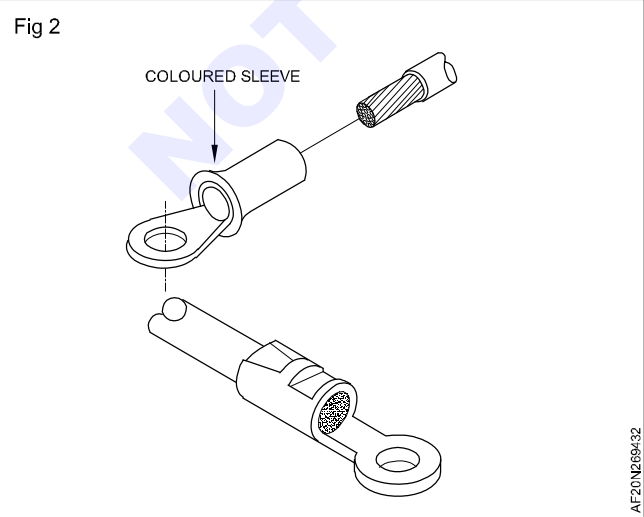

- Post insulated right-angle terminal (Fig 3)

Fig 3

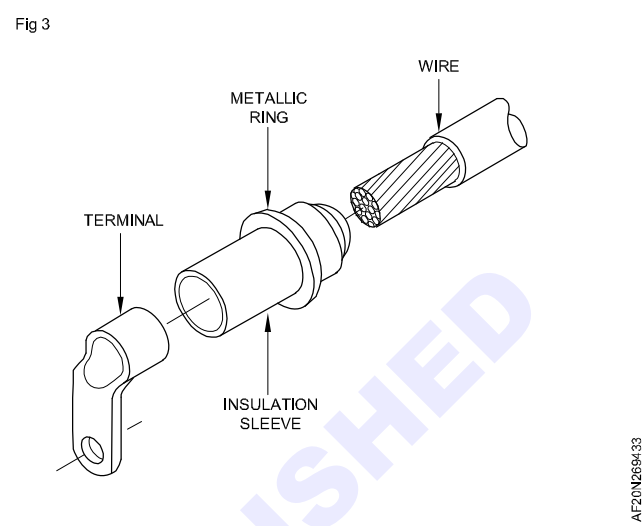

- Solistrand terminal (Fig 4)

Fig 4

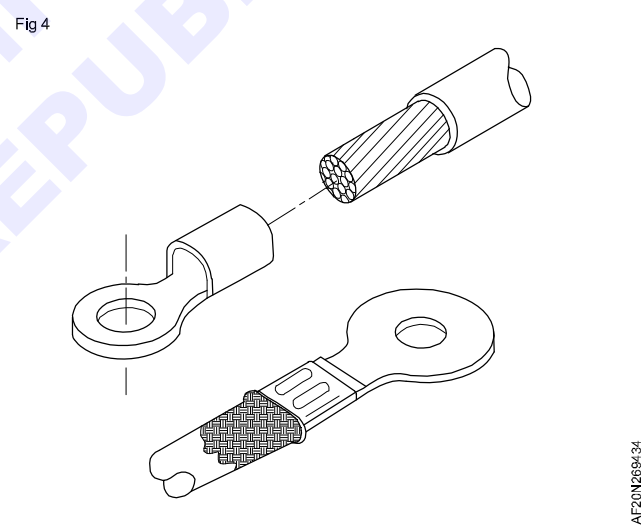

- Stratotherm terminal (Fig 5)

Fig 5

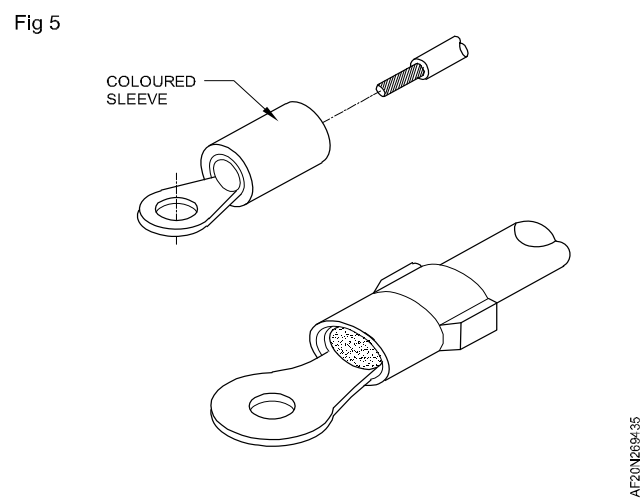

© NIMI NOT TO BE REPUBLISHED

- Rectangular slotted tongue terminal (Fig 6)

Fig 6

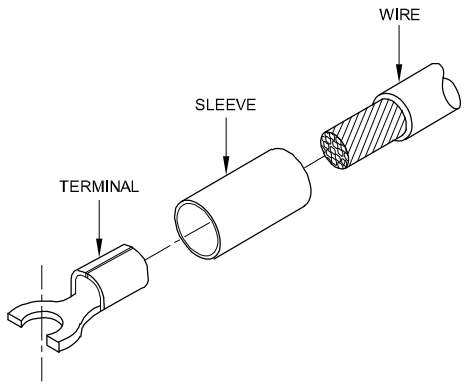

- Wire pin terminal (Fig 7)

Fig 7

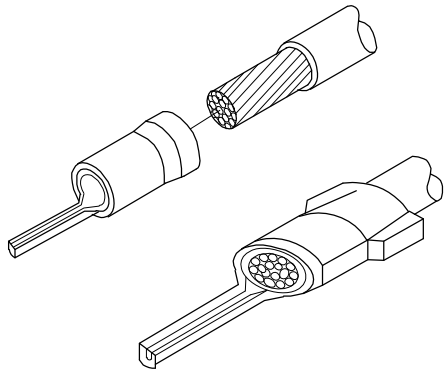

Other crimped components

Objectives: At the end of this lesson you shall be able to
- **Know the different types of end cap and splice.**

End cap

End caps are used to isolate the end of cable that is not connected. High and low temperature end caps installed on aircraft are

- Sealing end cap, high temperature (Fig 1)
- Sealing end cap, low temperature
- Heat shrinkable end cap (Fig 2)

Fig 1

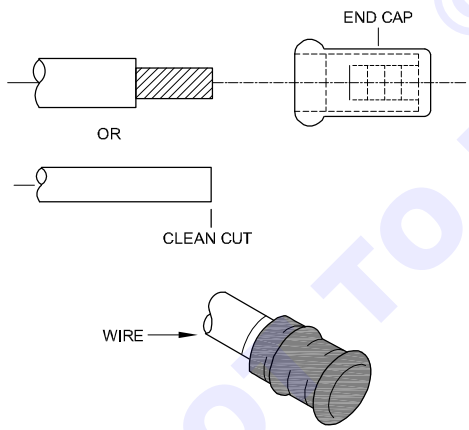

Fig 2

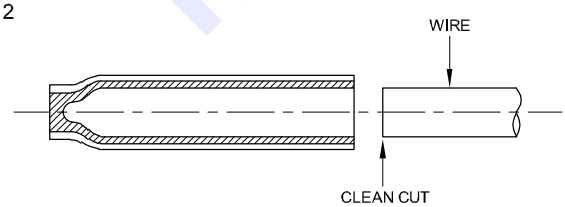

Splices installed on aircraft are:

- Parallel splice (Fig 3)
- Butt splice (Fig 4)
- Strap butt splice (Fig 5)
- Crimp end splice (Fig 6)

Fig 3

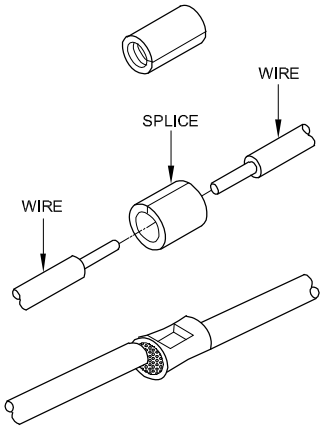

Fig 4

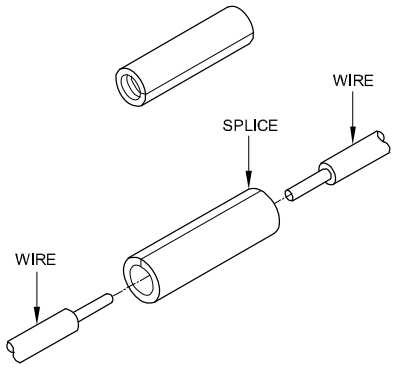

© NIMI NOT TO BE REPUBLISHED

Fig 5

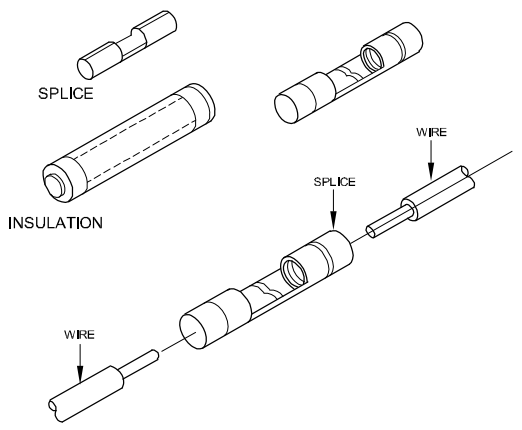

STRAP BUTT SPLICE

Fig 6

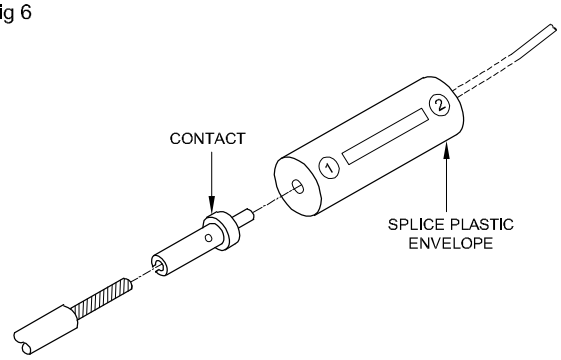

© NIMI
NOT TO BE REPUBLISHED

Insertion and extraction tools

Objectives: At the end of this lesson you shall be able to
- **Know the main insertion and extraction tools.**

The removable contacts have to be correctly positioned and locked in connecting elements to secure reliable electrical connections.

The contact connected to the cable is then inserted into its housing via the rear of the connecting element using a tool.

In order to make maintenance and possible modifications easier, the removal/installation possibility is conserved.

M81969/1 tools

Fig 1

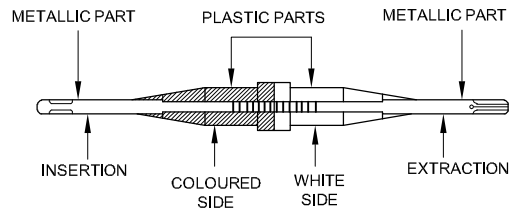

M81969/1 - METALLIC TOOL

MIL P/N	COLOUR / TYPE		CONTACT SIZE
	EXTRACTION	INSERTION	
M81969/1-04	WHITE	GREEN	22M
M81969/1-01	WHITE	GREEN	22
M81969/1-02	WHITE	RED	20
M81969/1-03	WHITE	BLUE	16

M81969/14 and /39 tools

Fig 2

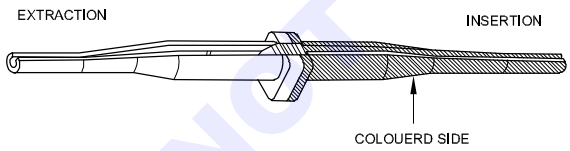

M81969/14 -XX & M81969/39-01 PLACTIC TOOLS

Fig 3

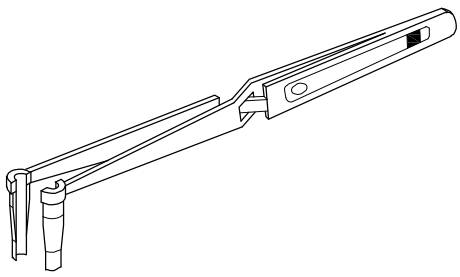

M81969/8

MIL P/N	COLOUR / TYPE		CONTACT SIZE
	EXTRACTION	INSERTION	
M81969/14-01	WHITE	GREEN	22
M81969/14-02	WHITE	RED	20
M81969/39-01	WHITE	GREEN	20
M81969/14-10	ORANGE	RED	20
M81969/14-11	WHITE	RED	20
M81969/14-03	WHITE	BLUE	16
M81969/14-04	WHITE	YELLOW	12

M81969/8 tools

MIL P/N	TYPE		CONTACT SIZE
	EXTRACTION	INSERTION	
M81969/8-01		X	22M
M81969/8-02	X		
M81969/8-03		X	22
M81969/8-04	X		
M81969/8-05		X	20
M81969/8-06	X		
M81969/8-07		X	16
M81969/8-08	X		
M81969/8-09		X	12
M81969/8-10	X		

M81969/17, M81969/19 tools

MIL P/N	TYPE		CONTACT SIZE
	EXTRACTION	INSERTION	
M81969/17-03		X	22M
M81969/19-07	X		
M81969/17-04		X	22
M81969/19-08	X		
M81969/17-05		X	20
M81969/19-09	X		

NOT TO BE REPUBLISHED © NIMI

Fig 4

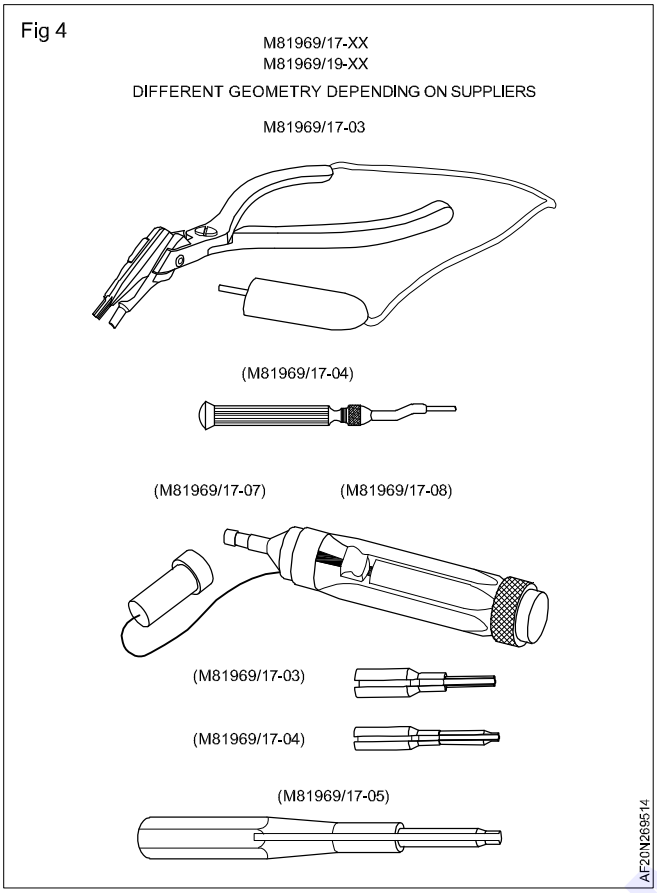

M81969/30 extraction tools

For dummy Contact and Unwired Normal Contact.

Fig 5

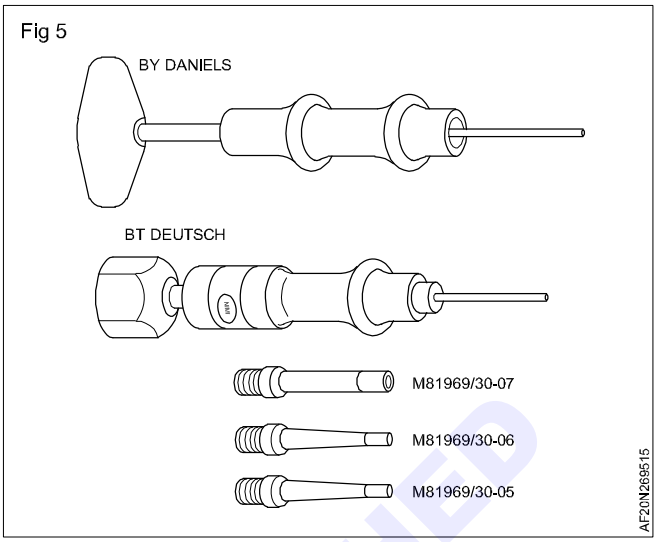

MIL P/N	CONTACT SIZE
M81969/30-08	22
M81969/30-11	20
M81969/30-05	20
M81969/30-12	16
M81969/30-06	16
M81969/30-13	12
M81969/30-07	12

Insertion and extraction of normal contacts

Objectives: At the end of this lesson you shall be able to
- **Know how to use insertion and extraction tools for normal contacts.**

Most electrical removable contact connecting elements use a plastic or metallic contact retention system (clip) which is an integral part or the main or central insulation (Clip Housing).

Fig 1

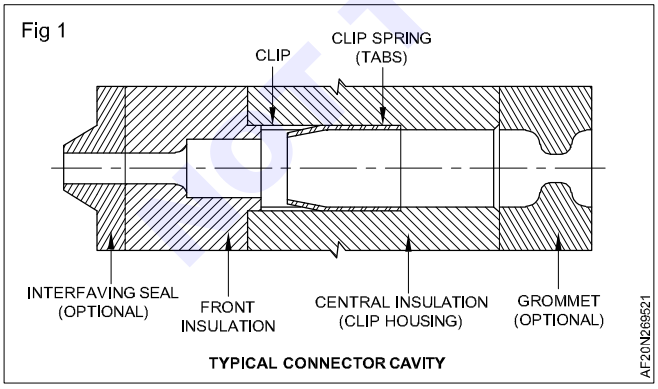

Insertion of contact

Select the tool to suit the type and size of contact.

For a plastic or metal tool, pen type

- Take the coloured end.
- With your thumb, slide the cable into the opening,
- apply slight tension so that the collar of the contact bears on the front of the tool.
- Stop all relative movement by gripping the cable between your thumb and the anti-slip portion of the tool.
- Position the contact in line with the cavity.
- Push forward. When the collar passes through the clip, a small click may be heard, and the locking felt.
- Free the cable by releasing the pressure.
- Remove the tool from the cavity by pulling rearwards; the tool slides over the cable.

For other tools

- Install the wired contact in the tool.
- Position the contact in line with the cavity.
- Push forward. When the collar passes through the clip, a small click may be heard, and the locking felt.
- Free the cable by releasing the pressure.

© NIMI NOT TO BE REPUBLISHED

- Remove the tool from the cavity by pulling rearwards; the tool slides over the cable.

Lightlty pull the cable reaward to make sure that the contact is correctly locked.

If you feel movement of the cable, do the insertion procedure again.

During the insertion operation with the tool, rotation must not be applied to the tool to avoid damaging the clips and/or breaking the pen. In this case, debris may remain in the cavities preventing correct locking and the possibility of release.

> **Note:To facilitate insertion of the contacts in the connector and to improve the check made on the locking of each contacts, twisted wires must be untwisted over a length of 60 mm before connecting to connectors.**

Extraction of contacts

Extraction of wire contacts

- Select the tool to suit the type and size of contact.
- Slide the cable corresponding to the cavity selected into the opening (white side).
- Slide the tool over the cable and insert it into the cavity until it comes into contact with the stop.

Fig 2

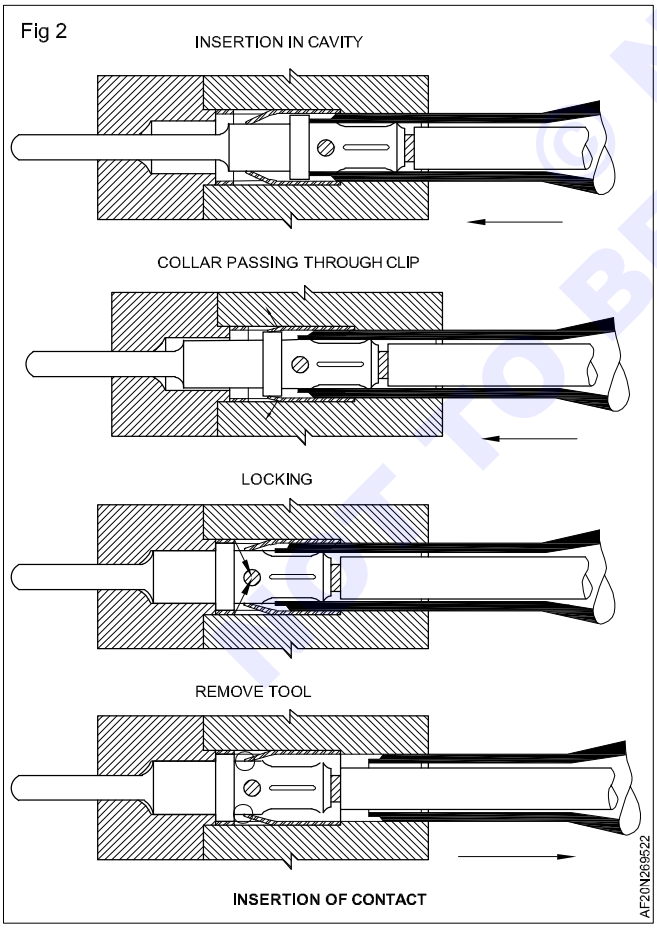

INSERTION OF CONTACT

- Grip the cable between your thumb and the anti-slip portion of the pen (or close the clip tool).
- Pull the cable/tool assembly to extract the contact from the cavity.

Extraction of unwired or dummy contacts

- Select the tool end fitting to suit the type and size of contact and fit it to the tool.
- Insert the tool in the selected cavity.
- Slide in the tool until it comes into contact with the stop, force the barrel of the contact slightly inside the end fitting. The outside of the end fitting retracts the clip tabs.
- Pull the tool/contact assembly out of the cavity.
- Use the piston of the tool to drive the contact off the end fitting.

During the extraction operation with the tool, rotation must not be applied to the tool to avoid damaging the clips and/or breaking the pen. In this case, debris may remain in the cavities preventing correct locking and the possibility of release.

After retraction of tool/contact/cable, check that all elements are free from damage.

Fig 3

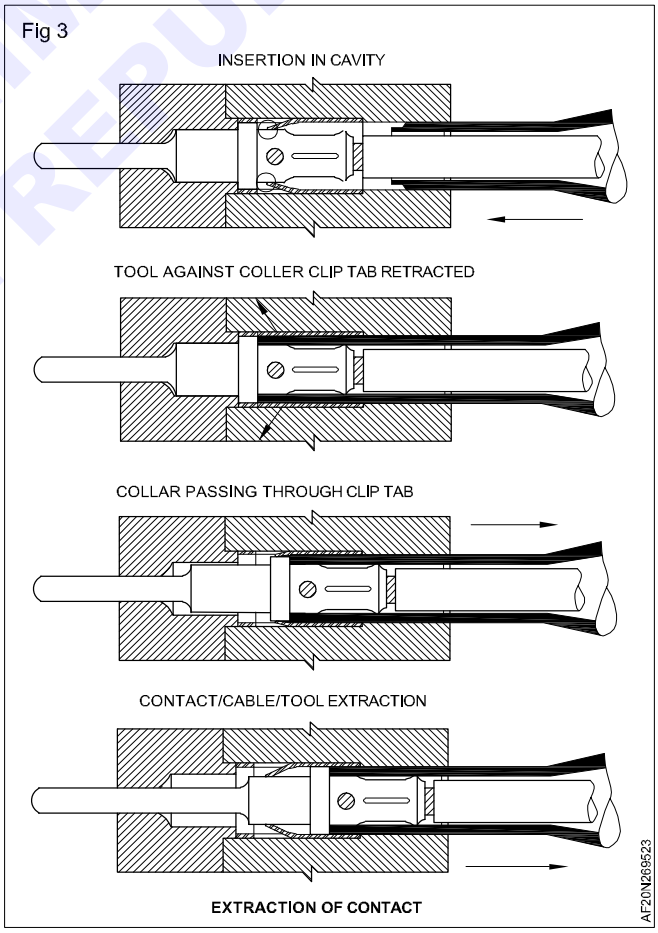

EXTRACTION OF CONTACT

© NIMI NOT TO BE REPUBLISHED

Circular connectors

Objectives: At the end of this lesson you shall be able to
- **Know the different circular connectors used in aircraft.**

Vocabulary

Shell

Houses insert and contacts.

Insert

The dielectric or insulating inner core, holds contacts.

Coupling Nut

Outer threaded or grooved ring which holds mated pair together.

Jam Nut

Nut that holds receptacle to a panel.

Bayonet Coupling

A non-threaded, ramp type of coupling.

Contacts

Mechanical tip to which electrical engagement is accomplished.

- **Pin Contact**

  Male half of a mated pair of contacts.
- **Socket Contact**

  Female half of a mated pair of contacts.
- **Solder Contact**

  A contact to which wire is joined by soldering.
- **Crimp Contact**

  A contact to which wire is joined by mechanical squeeze.

Plug (Connector)

The cable/coupling half of a mating pair.

Receptacle (Connector)

The panel/receiving half of a mating pair.

Main pair

Two connectors that couple together. Shell size insert arrangement and rotation must be compatible.

Grommet

Resilient part at back of insert (attached or separate); gives wire moisture seal.

Sealing Plug

Plastic type slug placed in unused grommet holes to seal.

Inferface seal

A resilient part on the face of pin inserts which provides moisture seal.

Typical circular connector (Fig 1)

The electrical connection into the system at the contact termination is either a soldered or crimped connection.

The shell and insert may be moisture resistant or a hermetic seal. The inserts in each connector must be oriented for correct mating, and the shell or insert usually contains a keying feature to prevent miss-mating that could damage the connector or result in an electrical problem.

A plug connector is the “male” connector, and a receptacle connector is the “female” connector.

Basic components of a circular connector are:

- Shell (Houses Inserts & Contacts)
- Insert (Dielectric Contact Insulator) Pin or Socket
- Contact (Wire End Termination) (Electrical Engagement) Coupling Nut.

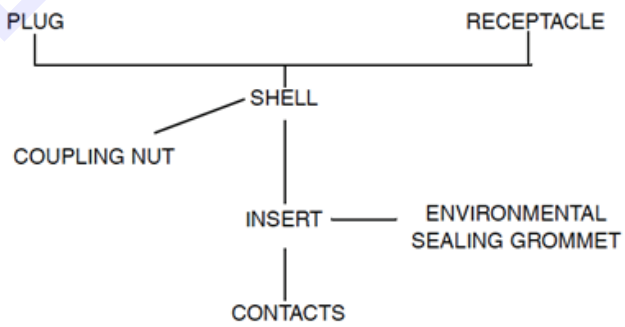

Fig 1

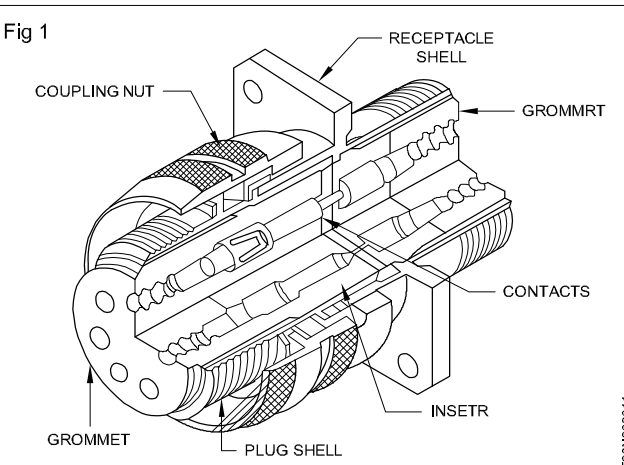

© NIMI NOT TO BE REPUBLISHED

Shell styles (Fig 2 and 3)

Fig 2

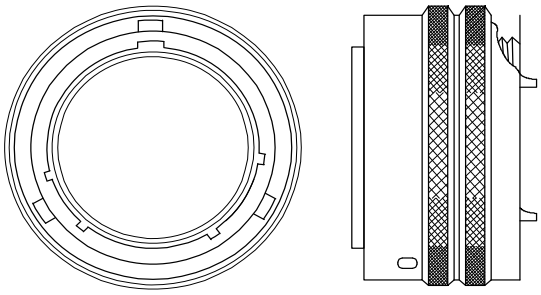

STRAIGHT PLUG

AF20N269612

Fig 3

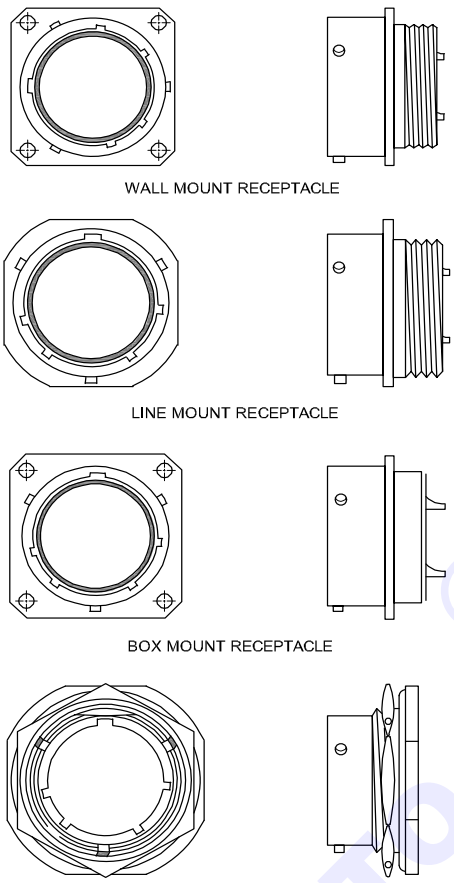

JAW NUT RECEPTACLE

AF20N269613

Arrangement (Fig 4)

In order for the connector to mate up with another component the contacts must be held in place in a specific orientation so that they are not damaged when the components are connected together. The specific orientation of the contacts is known as the insert arrangement.

Keying, insert positioning (Figure 5)

To avoid cross-plugging problems in applications requiring the use of more than one connector of the same size and arrangement, alternate rotations are available as indicated in the chart below.

As shown in the diagram, the front face of the pin insert is rotated within the shell in a clockwise direction from the normal shell key.

Fig 4

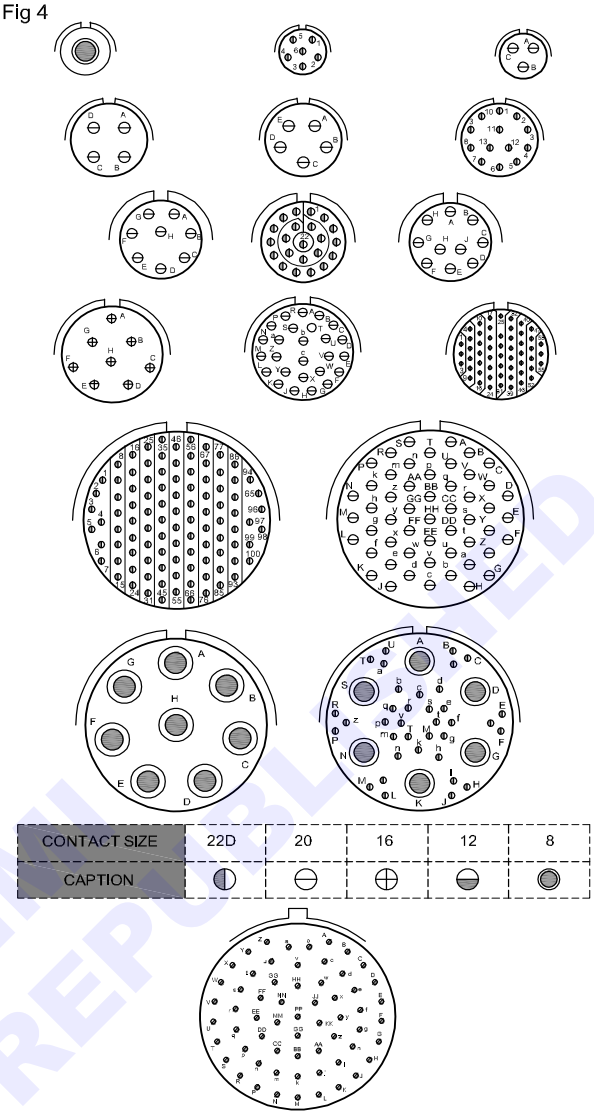

EXAMPLE OF ARRANGEMENTS

AF20N269614

The socket insert would be rotated counter-clockwise the same number of degrees in respect to the normal shell key.

Fig 5

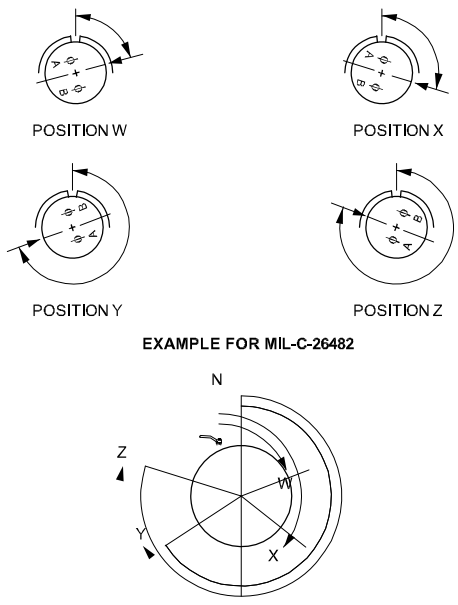

EXAMPLE FOR MIL-C-26482

EXAMPLE FOR NAS 1599

AF20N269615

© NIMI NOT TO BE REPUBLISHED

Rectangular connectors

Objectives: At the end of this lesson you shall be able to
- **Know the different rectangular connectors used in aircraft.**

Environmental resistant and non-environmental resistant rectangular connectors are used in electrical and electronic rack and panel applications.

These connectors are available with front release crimp contacts, rear-release crimp contacts and solder contacts.

ARINC 404 and 600 connectors (Fig 1)

Arinc connectors are a recognized standard rack and panel used to connect high-performance equipment for Aircraft applications.

This larger shell increases the number of contacts with a large choice of arrangements which allows users the use of Quadrax, Coaxial and optical contacts.

These connectors are to be used where it is necessary to ensure mating of multiple contacts from signal, power, coaxial, Quadrax to optical transmission.

Regarding the high-density gauge 22 of contacts, this standard offers the possibility to connect up to 800 contacts and 56 Quadrax contacts to respond to today's aerospace market challenges for the increase and growth performance requirements.

To protect high density contacts during the mating Arinc connectors are using a reversed design on the insert.

Therefore, contacts gauge 22 have to be male (pin) on the plug shell and female on the receptacle shell.

Arinc 600 rectangular connectors are the successor of the ARINC 404 for most of the new avionic designs.

Fig 1

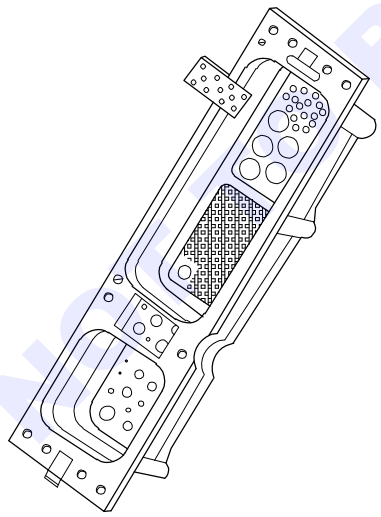

Shell types & cavity (Fig 2)

Insert layout (Fig 3)

Keying (Fig 4)

Fig 2

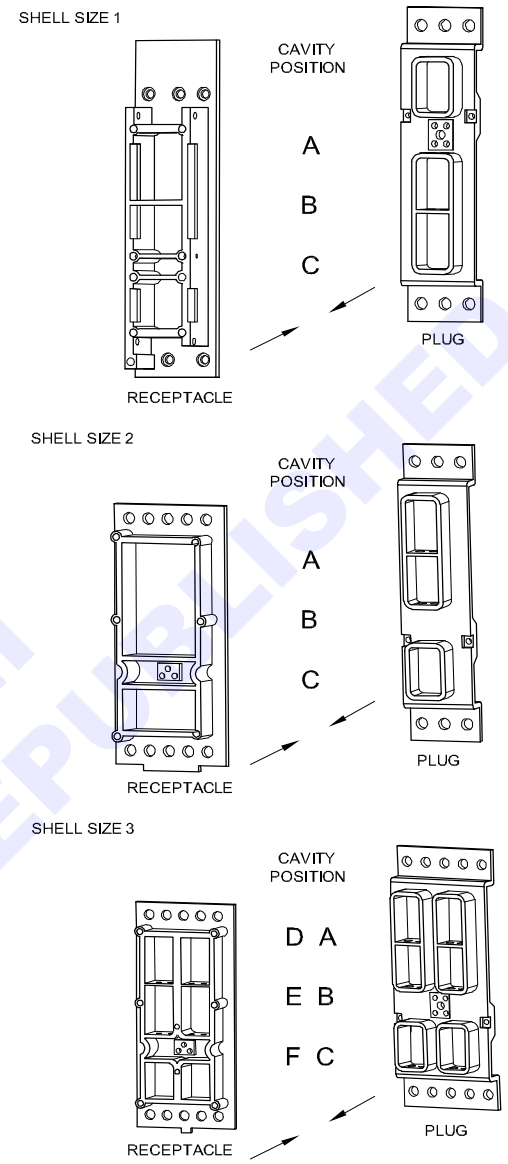

Fig 3

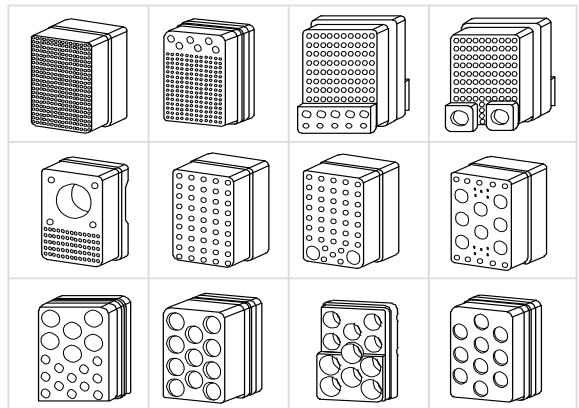

D-Sub connector (MIL-C 24308); This specification M24308 covers the requirements for nonenvironmental,

© NIMI NOT TO BE REPUBLISHED

Fig 4

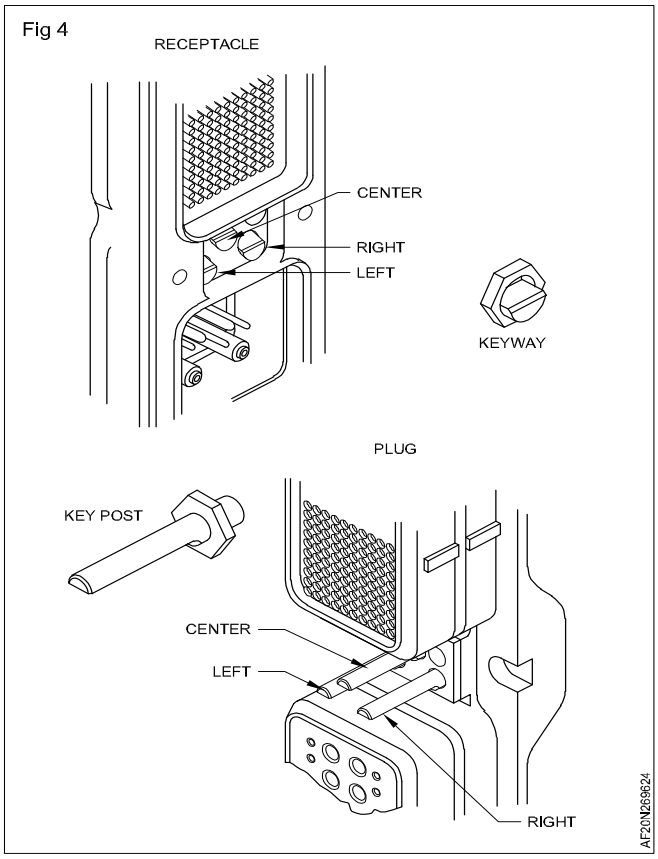

polarized shell, miniature, rack and panel connectors having pin and socket, crimp (removable), solder (nonremovable) with rigid or float mounting.(Fig 5)

M24308 D-subminiature (also known as D-Sub) connectors are widely used in a variety of applications where weight & dimensions are the most concerned.

Fig 5

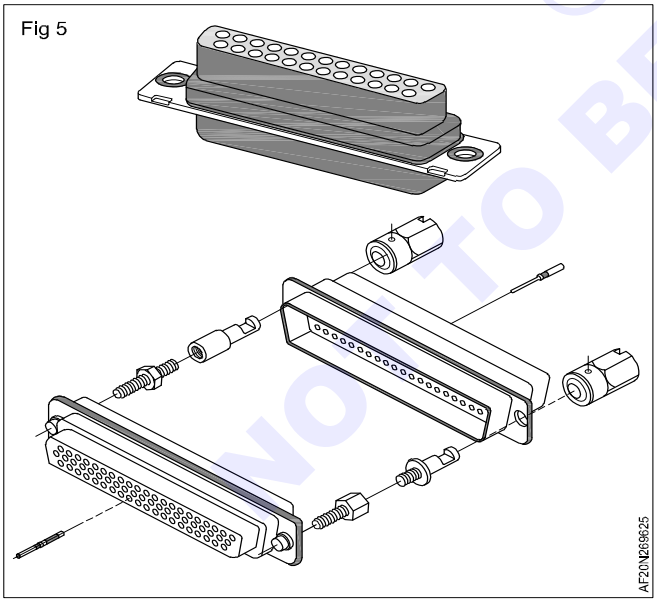

M24308 connectors are usually used for applications such as military and/or civil equipment, communication systems, industrial instrumentations, space flight equipment, etc.

Two version of contacts are available:

- Solder contacts: note that eyelet or solder cup terminals are already installed in the insert
- Crimp contacts: in accordance with the AS39029 (M39029) depending on the choice of the standard or High-Density version D-sub connector.

EN3545 connectors ; Two versions are available with a sealed or unsealed grommet at the rear of the connector.

Contacts used are fully EN3155 compliant. Male contacts are in accordance with the EN3155-008 female where the female contacts are under the EN3155-003.

In order to meet customer requirements, arrangements 02, 03 and 06 are dedicated for copper contacts only and arrangements 12, 13 and 16 for aluminium contacts.

Compared to a D-sub connector, customers have the possibility to use Quadrax, Power, optical fibre contacts combined with signal contacts.

EN3545 has a “D” shape like a D-Sub connector however its coupling type is more secured

In order to avoid mistakes during coupling, a fast and secure connection is available by using polarization keys (36 keying combinations)

Fig 6

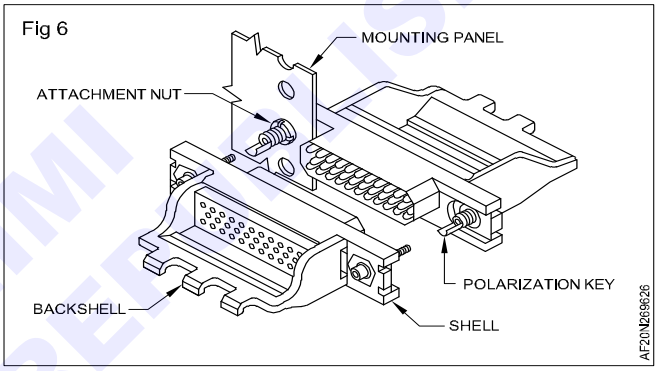

Fig 7

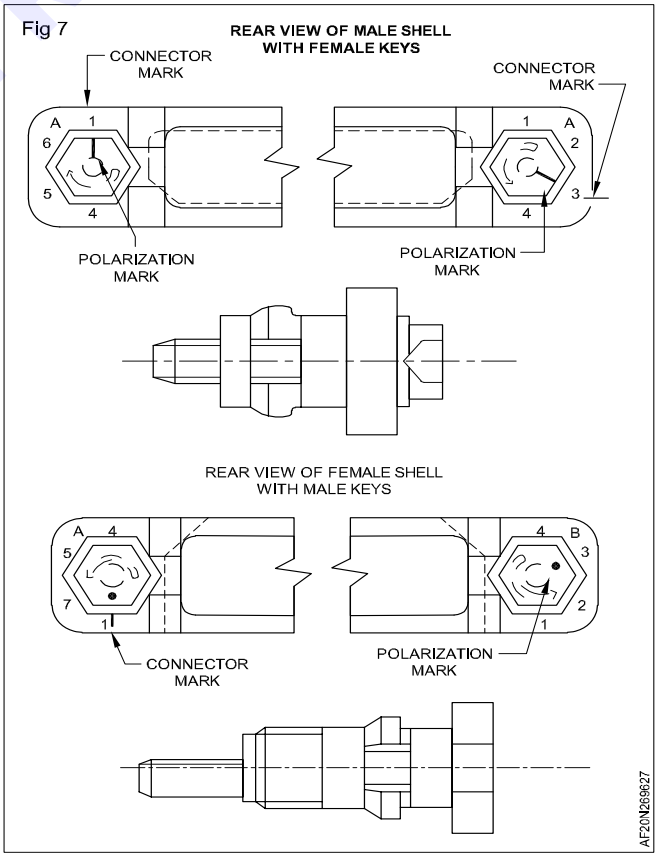

© NIMI NOT TO BE REPUBLISHED

Terminal block and junction module

Objectives: At the end of this lesson you shall be able to
- **Know the different junction module used in aircraft**
- **Know the different terminal blocks used in aircraft.**

Modular terminal block and junction module

Quick connection modules are designed to guarantee high reliability even in the harshest environmental conditions. Their compact size complies with high density cable requirement and offer great flexibility in rail mounting options.

They are available in sealed and unsealed versions for standardized contacts sizes 22, 20, 16, and 12 (AWG 26 to 12) in a wide range of contact arrangements.

The modules consist of a thermoplastic shell fitted with female contacts, inserted retention springs and a fluorinated silicone triple seal barrier.

Fig 1

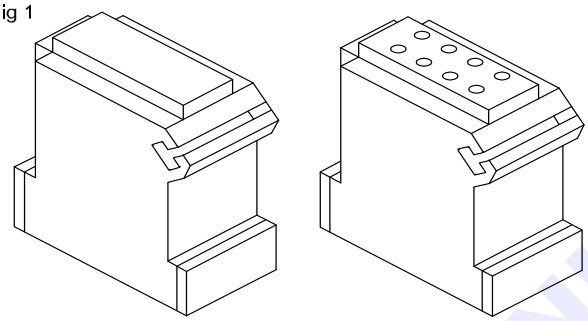

Installation on rail

Modules shall be installed on terminal block rail in increasing numerical order.

When the observer is facing the modular terminal block, horizontal reading is performed from left to right (module 1 on left), and vertical reading from top to bottom (module 1 on top).

Modules are slid and locked in position by locking of the end clamps.

Note: The end clamps must be safetied by wire locking in vibration areas

Fig 2

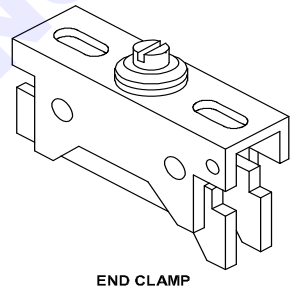

Fig 3

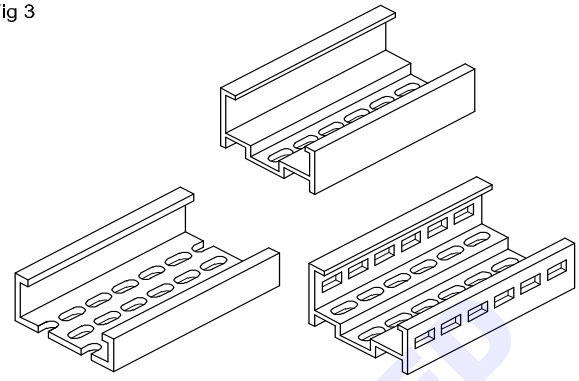

Fig 4

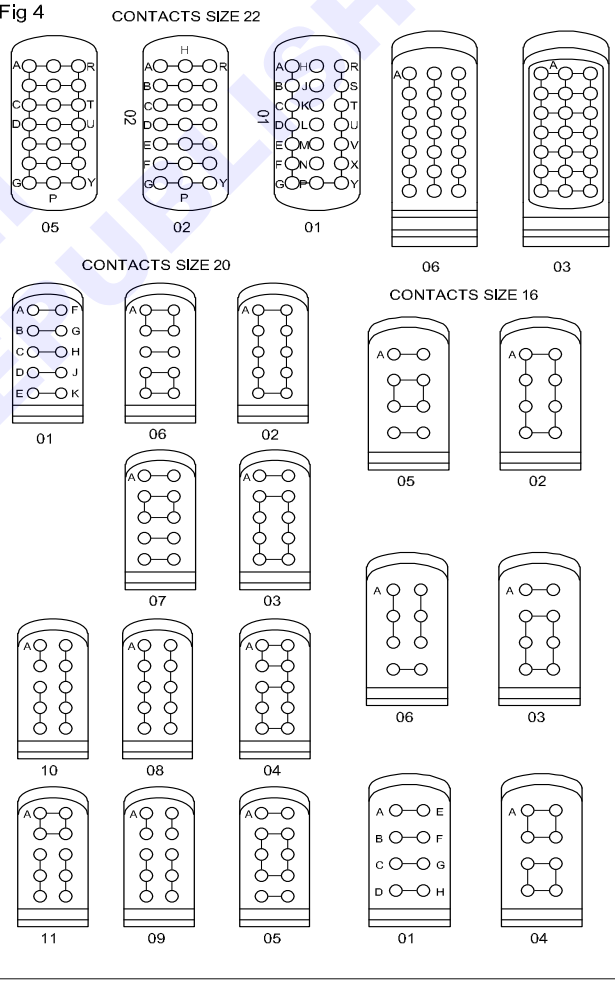

Non modular terminal blocks

These assemblies are made of Terminal Junction Blocks, using self-locking nuts with captive washers.

Stainless steel terminal studs provide a high torque value allowing high clamping.

A protecting cover equipped with retained screws is assembled by means of column screws used also for mounting on structure.

© NIMI NOT TO BE REPUBLISHED

Fig 5

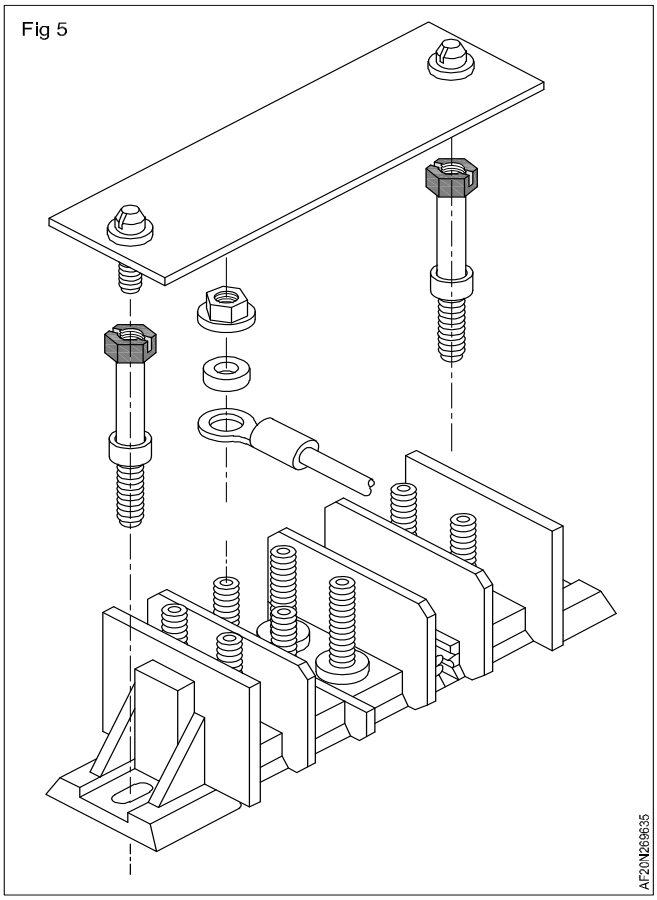

© NIMI
NOT TO BE REPUBLISHED

Electrical diagram reading

Objectives: At the end of this lesson you shall be able to
- **Know the symbols used**
- **Use wiring diagram for testing.**

A wiring diagram is a simplified conventional pictorial representation of the physical connections and physical layout of an electrical system or circuit.

Wiring diagrams show how the aircraft wires are connected and where they should be located in the electrical system, as well as the physical connections between all the components.

This makes a wiring diagram useful in manufacturing or troubleshooting an electrical system or circuit for various aircraft.

Symbols

Shielded wire

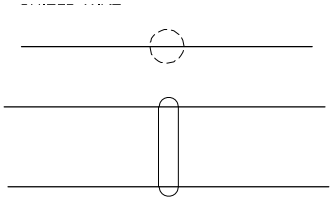

Twisted wire

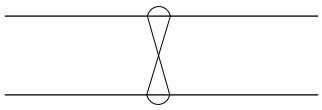

Twisted shielded cable

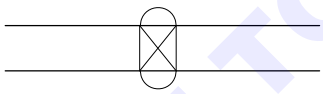

Coaxial cable

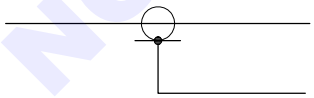

Fibre optic cable

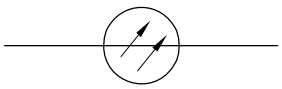

Quadrax cable

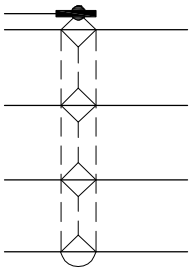

Wire with end cap

Separable splice

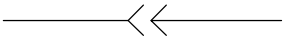

Connector

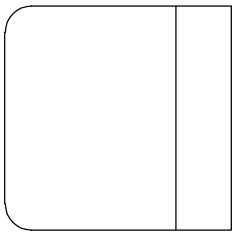

Pressure seal

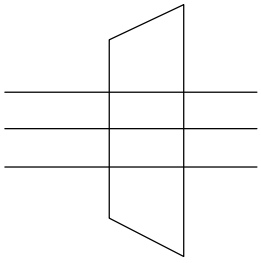

© NIMI NOT TO BE REPUBLISHED

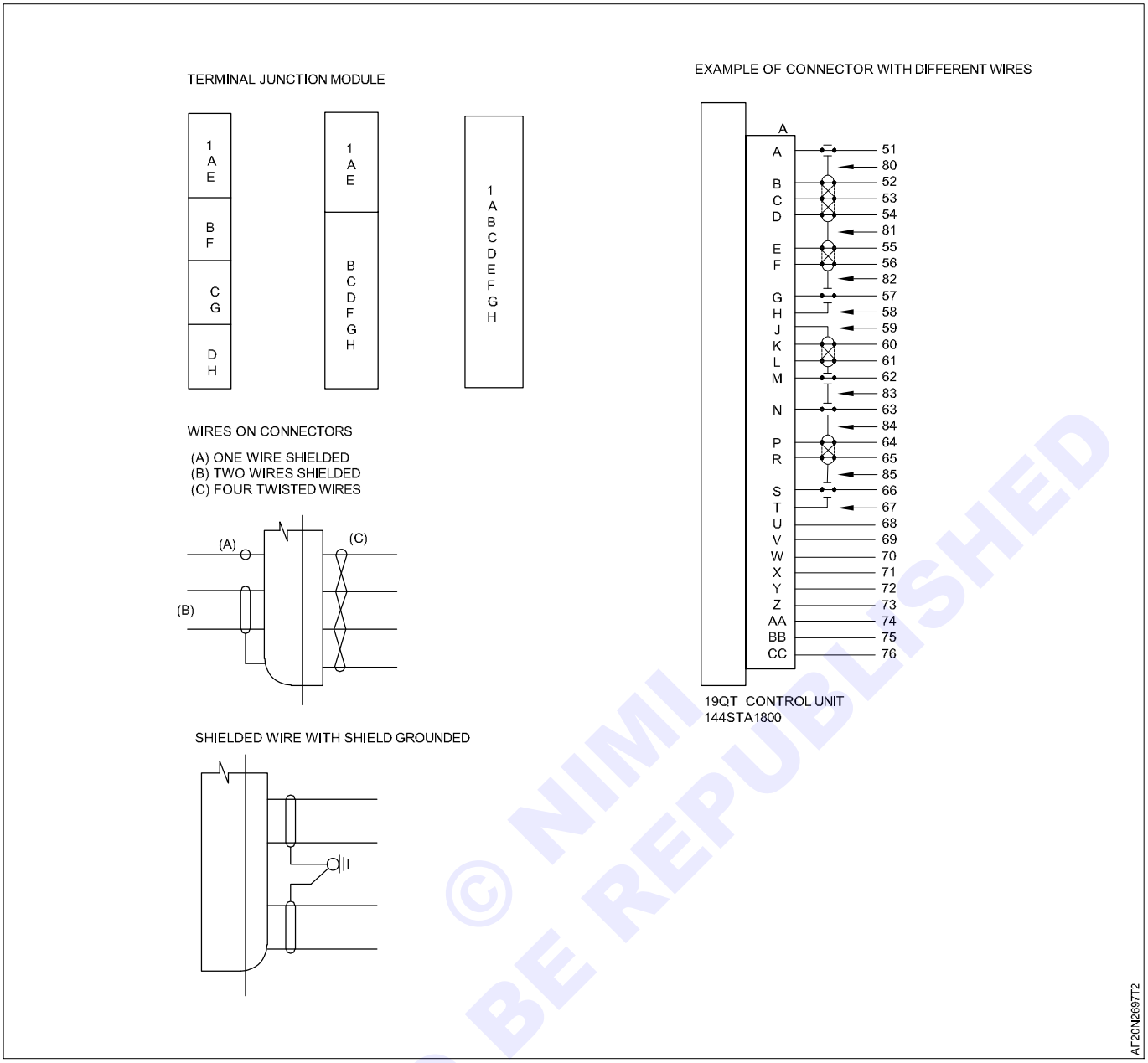

© NIMI NOT TO BE REPUBLISHED

Attaching parts for harness

Objectives: At the end of this lesson you shall be able to
- **state the components used for attaching harness**
- **state the rules to use attaching parts.**

Routing clamps

Wires, cables, bundles, and harnesses are clamped to the aircraft structure by cushioned metal clamps for primary support and plastic clamps.

- The clamp size shall be adapted to the bundle diameter.
- The bundle shall not slide after the clamp has been tightened.
- The cables shall not be pinched between the lugs of the clamp.
- The clamp shall be completely closed: its lugs shall be correctly aligned when the clamp is
- tightened.
- The bundle shall not be deformed or damaged by the clamp.

Fig 1

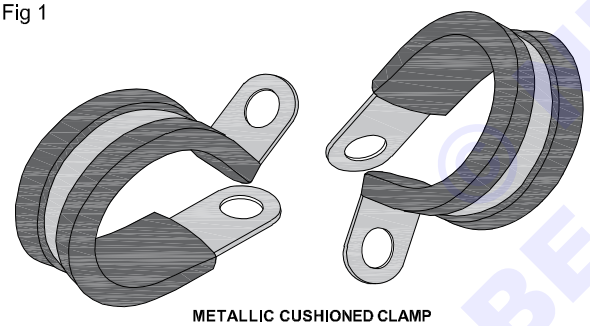

METALLIC CUSHIONED CLAMP

AF20N269811

Fig 2

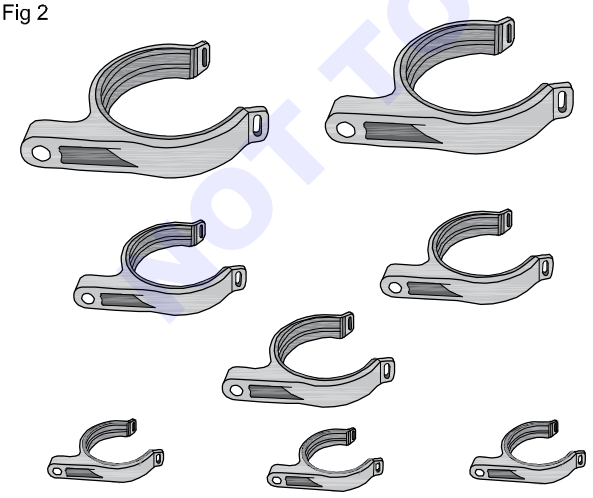

PLASTIC OPEN CUSHIONED CLAMP

AF20N269812

Fig 3

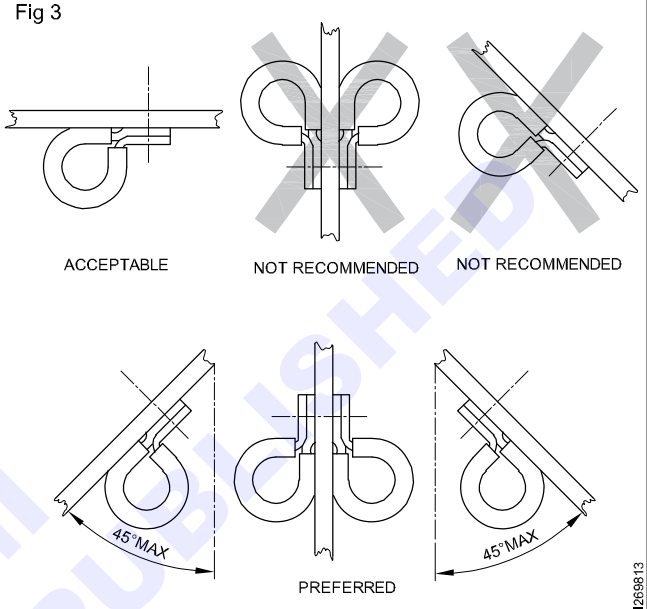

ROUTING CLAMP PREFERRED ANGLE INSTALLATION

AF20N269813

Fig 4

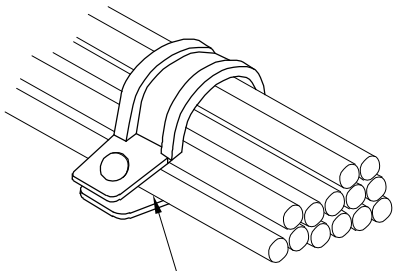

INCORRECT UNSTALLATION

AF20N269814

Cable clamps are cushioned with insulating material to prevent abrasion of wires. Never use metal clamps without cushions to hold wires.

V bracket

The bundles shall be attached to a V bracket by a cable tie with the head always on the side opposite the attachment.

© NIMI NOT TO BE REPUBLISHED

Fig 5

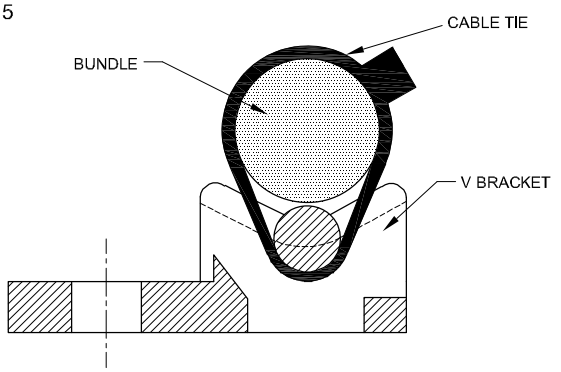

Fig 6

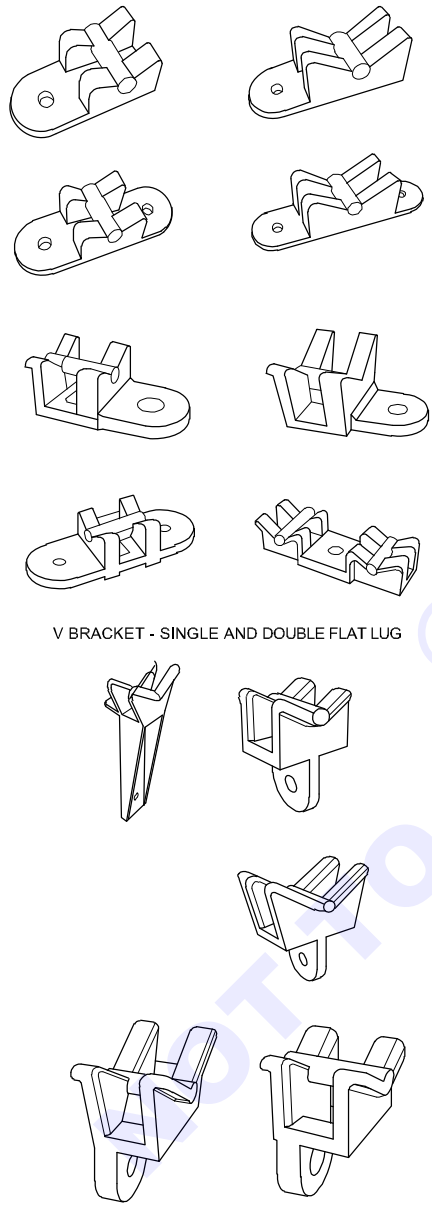

Hat and harnesses support

Designed to secure and guide wire bundles throughout an aircraft, Harness and Hat Supports were designed for lean manufacturing and durability.

Built in a one-piece, lightweight design with multiple fixing points, the high-performance products are strong, durable and make wire bundle installation and maintenance easy.

They are able to support large bundles and high stress requirements.

- Multiple fixing points to offer convenience and ease of use.
- Variety of sizes to accommodate different cable routing requirements.

Fig 7

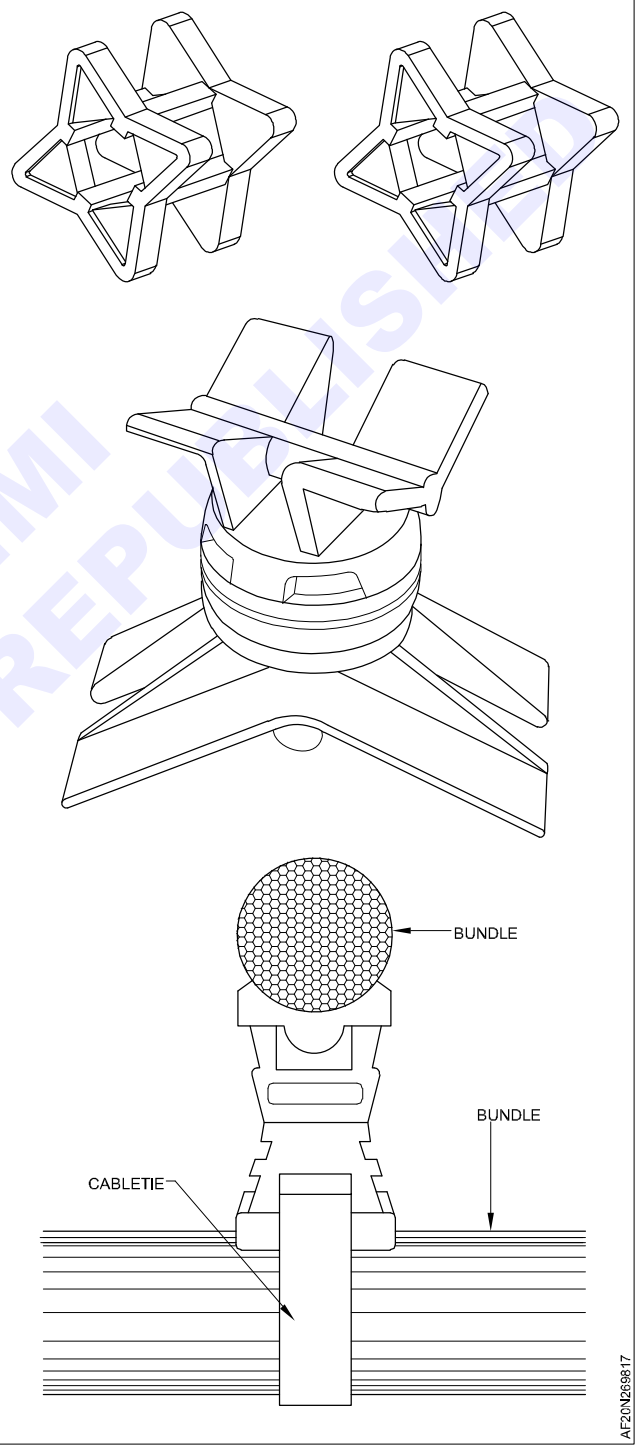

© NIMI NOT TO BE REPUBLISHED

Standoff

They come with a locking feature for security, are designed with ribs to provide additional strength, and support a wide range of clamp sizes and raceways for added convenience.

Fig 8

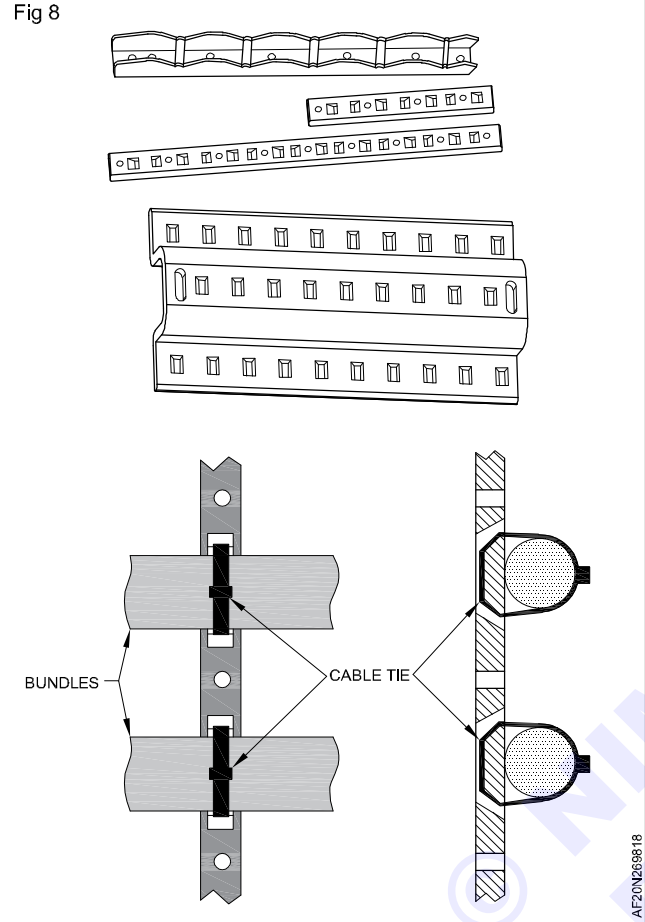

Spacers

They maintain clearance between two parallel or crossing cable harnesses, with different versions available.

Fig 9

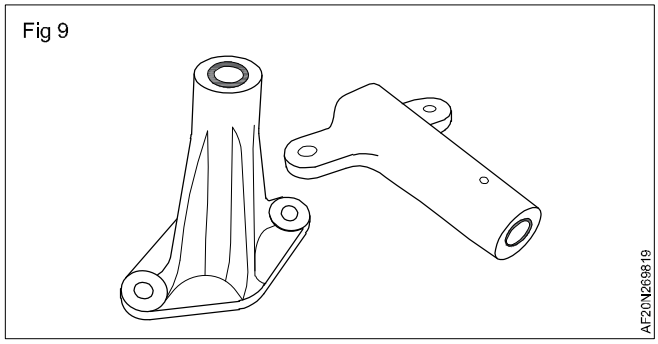

Harness fitting rules

Objectives: At the end of this lesson you shall be able to
- **Know the special care for harness integrity**
- **Know the bending radii**
- **Understand the bundle and harness routing.**

General routing precautions

When installing electrical wiring in aircraft, observe the following precautions:

- Do not permit wire or wire bundles to have moving, or frictional contact with any other object.
- Do not permit wire or wire bundles to contact sharp edges of structure, holes, etc.
- Do not damage threads of attaching hardware by over-tightening or cross threading.
- Do not subject wire bundles to sharp bends during installation.
- Do not allow dirt, chips, loose hardware, lacing tape scraps, etc., to accumulate in enclosures or wire bundles.
- Do not hang tools or personal belongings on wire bundles.
- Do not use installed wire bundles or equipment as footrests, steps, or handholds.
- Do not compensate for wires that are too long by folding wire back on itself and hiding such folds within bundles.
- Do not twist or pull wire bundles during assembly or installation so that pins are pulled from connectors, or connectors or wires are otherwise damaged.
- Do not stretch wires to mate connectors; and allow sufficient slack to permit easy mating.
- Do not paint electrical wires, connectors, switches or other electrical devices.

© NIMI NOT TO BE REPUBLISHED

Installation of harness

1 Lay the bundle or harness out loosely in the clamp areas.

2 Loosely secure the bundle or harness in the clamps.

Put the harness into position using installation flags located on the harness head to mark the beginning of the uncoiling direction.

3 Inspect the connection or contact for damage then couple the connectors.

Unconnected connectors must be protected (caps).

4 At each mating location, adjust the bundle or harness to accommodate drip loops, proper bending of the wires at the connector or terminal block interfaces, and minimum wire bending requirements.

5 Tighten the clamps at the nearest mating locations. The bundle or harness should not be moveable through the clamp. If the bundle or harness is loose, wrap with red or black non-adhesive, self-bonding tape until sufficiently built up to permit the clamp to secure the wire bundle.

6 Between each remaining clamp, adjust the bundle or harness to accommodate minimum bending, flexing, slack, and chafing. Tighten the clamps.

As a general rule, harness twisting is not allowed. However, slight twisting without stress on the wires is tolerated to position the branches in the correct direction at hinged movable parts.

Slack, sagging

Do not install single wires or wire bundles with excessive slack. Slack between support points such as cable clamps should normally not exceed 10-12mm. (Figure 1). This is the maximum that it should be possible to deflect the wire with moderate hand force.

Fig 1

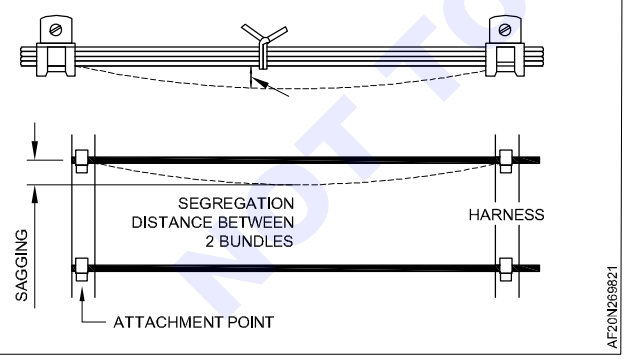

Drip loop

Where wiring is dressed downward to a connector, terminal block, panel, or junction box, a trap, or drip loop, shall be provided in the wiring to prevent fluids or condensation from running into the above devices. Potted connectors are exempt from this requirement (Figure 2).

Fig 2

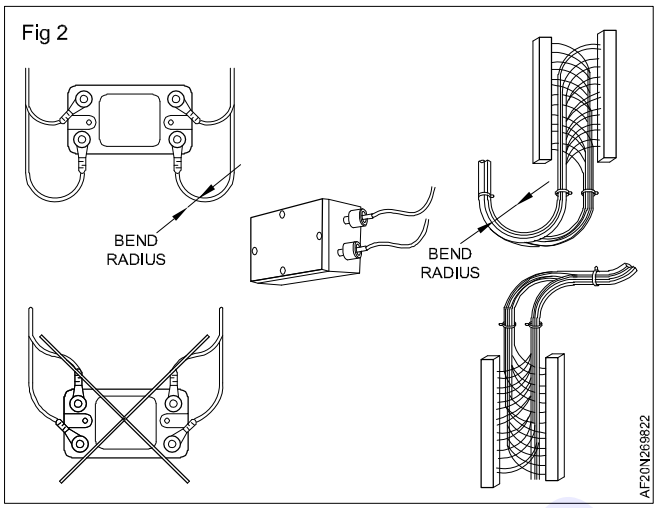

Radius of bend

The minimum bend radius for a harness that has no optical or coaxial cables attached, must be equal to 6 times the outside diameter of the largest group of wires included in the harness.

With coaxial or optical cables attached, the minimum bend radius must be equal to 10 times the outside diameter of the largest coaxial or optical cable.

Table 1 - Bundle and cable bend radius

BUNDLE/CABLE	MINIMUM BEND RADIUS
Copper or aluminium	X6
Coaxial or fibre optical	X10

The bend radius must never be less than the minimum allowable radius of the largest wires included in the harness (Table 2).

Table 2 - Wire minimum bend radius

CABLE GAUGE	MINIMUM BEND RADIUS
26 to 22	6mm
20	7.5mm
18 to 12	10mm

Distance to environment

The minimum distances are (Figure 3):

- 25 mm from structure or equipment located below.
- 20 mm from structure or equipment located above or at the side.
- 50 mm minimum from moving parts.

These distances can be reduced to 10 mm when there is an attachment point (Fig 4).

© NIMI NOT TO BE REPUBLISHED

Fig 3

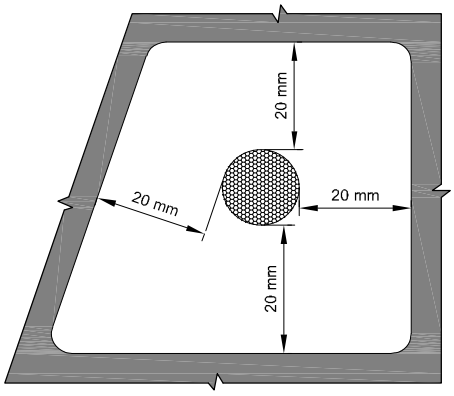

Fig 4

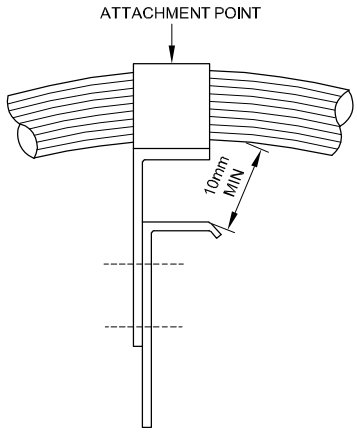

There must be a distance of at least 10 mm between the harness and non-insulated surfaces (carbon, metal etc.). If this requirement cannot be met, special protection must be considered (Fig 5).

Fig 5

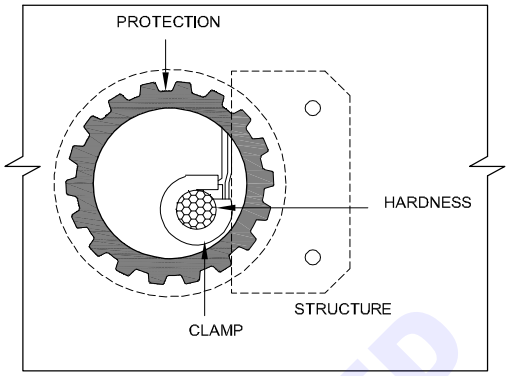

© NIMI
NOT TO BE REPUBLISHED