TOOL & DIE MAKER

(PRESS TOOLS, JIGS & FIXTURES)

NSQF LEVEL - 4

2nd Year

TRADE THEORY

Sector: CAPITAL GOODS & MANUFACTURING

(As per revised syllabus July 2022 - 1200 Hrs)

© NIMI NOT TO BE REPUBLISHED

Directorate General of Training

DIRECTORATE GENERAL OF TRAINING
MINISTRY OF SKILL DEVELOPMENT & ENTREPRENEURSHIP
GOVERNMENT OF INDIA

NATIONAL INSTRUCTIONAL MEDIA INSTITUTE, CHENNAI

Post Box No. 3142, CTI Campus, Guindy, Chennai - 600 032

Sector : Capital Goods and Manufacturing

Duration : 2 Years

Trade : Tool & Die Maker (Press Tools, Jigs & Fixtures) - Trade Theory - 2nd Year NSQF level - 4 (Revised 2022)

Developed & Published by

National Instructional Media Institute
Post Box No.3142
Guindy, Chennai - 600 032
INDIA
Email: chennai-nimi@nic.in
Website: www.nimi.gov.in

Copyright © 2022 National Instructional Media Institute, Chennai

First Edition: December 2023 Copies: 1000

Rs. 280/-

© NIMI NOT TO BE REPUBLISHED

FOREWORD

The Government of India has set an ambitious target of imparting skills to 30 crores people, one out of every four Indians, by 2020 to help them secure jobs as part of the National Skills Development Policy. Industrial Training Institutes (ITIs) play a vital role in this process especially in terms of providing skilled manpower. Keeping this in mind, and for providing the current industry relevant skill training to Trainees, ITI syllabus has been recently updated with the help of Mentor Councils comprising various stakeholder's viz. Industries, Entrepreneurs, Academicians and representatives from ITIs.

The National Instructional Media Institute (NIMI), Chennai has now come up with instructional material to suit the revised curriculum for **Tool & Die Maker (Press Tools, Jigs & Fixtures) - Trade Theory - 2nd Year - NSQF Level - 4 in Capital Goods And Manufacturing Sector.** The NSQF Level - 4 (Revised 2022) trade Practical will help the trainees to get an international equivalency standard where their skill proficiency and competency will be duly recognized across the globe and this will also increase the scope of recognition of prior learning. NSQF Level - 4 (Revised 2022) trainees will also get the opportunities to promote life long learning and skill development. I have no doubt that with NSQF Level - 4 (Revised 2022) the trainers and trainees of ITIs, and all stakeholders will derive maximum benefits from these IMPs and that NIMI's effort will go a long way in improving the quality of Vocational training in the country.

The Director General of Training, Executive Director & Staff of NIMI and members of Media Development Committee deserve appreciation for their contribution in bringing out this publication.

Jai Hind

Atul Kumar Tiwari, *I.A.S*
Secretary
Ministry of Skill Development & Entrepreneurship,
Government of India.

December 2023
New Delhi - 110 001

© NIMI NOT TO BE REPUBLISHED

PREFACE

The National Instructional Media Institute (NIMI) was established in 1986 at Chennai by then Directorate General of Employment and Training (D.G.E & T), Ministry of Labour and Employment, (now under Directorate General of Training, Ministry of Skill Development and Entrepreneurship) Government of India, with technical assistance from the Govt. of the Federal Republic of Germany. The prime objective of this institute is to develop and provide instructional materials for various trades as per the prescribed syllabi under the Craftsman and Apprenticeship Training Schemes.

The instructional materials are created keeping in mind, the main objective of Vocational Training under NCVT/NAC in India, which is to help an individual to master skills to do a job. The instructional materials are generated in the form of Instructional Media Packages (IMPs). An IMP consists of Theory book, Practical book, Test and Assignment book, Instructor Guide, Audio Visual Aid (Wall charts and Transparencies) and other support materials.

The trade practical book consists of series of exercises to be completed by the trainees in the workshop. These exercises are designed to ensure that all the skills in the prescribed syllabus are covered. The trade theory book provides related theoretical knowledge required to enable the trainee to do a job. The test and assignments will enable the instructor to give assignments for the evaluation of the performance of a trainee. The wall charts and transparencies are unique, as they not only help the instructor to effectively present a topic but also help him to assess the trainee's understanding. The instructor guide enables the instructor to plan his schedule of instruction, plan the raw material requirements, day to day lessons and demonstrations.

In order to perform the skills in a productive manner instructional videos are embedded in QR code of the exercise in this instructional material so as to integrate the skill learning with the procedural practical steps given in the exercise. The instructional videos will improve the quality of standard on practical training and will motivate the trainees to focus and perform the skill seamlessly.

IMPs also deals with the complex skills required to be developed for effective team work. Necessary care has also been taken to include important skill areas of allied trades as prescribed in the syllabus.

The availability of a complete Instructional Media Package in an institute helps both the trainer and management to impart effective training.

The IMPs are the outcome of collective efforts of the staff members of NIMI and the members of the Media Development Committees specially drawn from Public and Private sector industries, various training institutes under the Directorate General of Training (DGT), Government and Private ITIs.

NIMI would like to take this opportunity to convey sincere thanks to the Directors of Employment & Training of various State Governments, Training Departments of Industries both in the Public and Private sectors, Officers of DGT and DGT field institutes, proof readers, individual media developers and coordinators, but for whose active support NIMI would not have been able to bring out this materials.

Chennai - 600 032 **EXECUTIVE DIRECTOR**

© NIMI NOT TO BE REPUBLISHED

ACKNOWLEDGEMENT

National Instructional Media Institute (NIMI) sincerely acknowledges with thanks for the co-operation and contribution extended by the following Media Developers and their sponsoring organisations to bring out this Instructional Material **(Trade Theory)** for the trade of **Tool & Die Maker - (Press Tools, Jigs & Fixtures) 2nd Year** under **Capital Goods And Manufacturing** Sector for ITIs.

MEDIA DEVELOPMENT COMMITTEE MEMBERS

Shri. Vijayaraghavan	-	Assistant Director of Training (Retd) ATI, Chennai - 600 032.
M. Sampath	-	Training Officer (Retd) CTI, Chennai 600 032.

NIMI CO-ORDINATORS

Shri. Nirmalya Nath	-	Deputy General Manager, NIMI, Chennai - 32.
Shri. V. Gopalakrishnan	-	Manager, NIMI, Chennai - 32.

NIMI records its appreciation for the Data Entry, CAD, DTP operators for their excellent and devoted services in the process of development of this Instructional Material.

NIMI also acknowledges with thanks the invaluable efforts rendered by all other NIMI staff who have contributed towards the development of this Instructional Material.

NIMI is also grateful to everyone who has directly or indirectly helped in developing this Instructional Material.

© NIMI NOT TO BE REPUBLISHED

INTRODUCTION

TRADE PRACTICAL

The trade practical manual is intended to be used in practical workshop. It consists of a series of practical exercises to be completed by the trainees during the course of the **Tool & Die Maker (Press Tools, Jigs & Fixtures)** trade supplemented and supported by instructions/ informations to assist in performing the exercises. These exercises are designed to ensure that all the skills in compliance with NSQF LEVEL - 4 (Revised 2022) syllabus are covered.

The manual is divided into Ten modules.

Module 1	-	Jigs & Fixtures
Module 2	-	CNC Lathe
Module 3	-	CNC Machining Centre
Module 4	-	CAM EDM
Module 5	-	Blanking / Piercing Tool
Module 6	-	Hydraulics & Pneumatics
Module 7	-	Compound Tool
Module 8	-	Progressive Tool
Module 9	-	Machine Maintenance
Module 10	-	Bending Tool/ Draw Tool

The skill training in the shop floor is planned through a series of practical exercises centered around some practical project. However, there are few instances where the individual exercise does not form a part of project.

While developing the practical manual a sincere effort was made to prepare each exercise which will be easy to understand and carry out even by below average trainee. However the development team accept that there is a scope for further improvement. NIMI, looks forward to the suggestions from the experienced training faculty for improving the manual.

TRADE THEORY

The manual of trade theory consists of theoretical information for the Course of the **Tool & Die Maker (Press Tools, Jigs & Fixtures)** Trade Practical NSQF Level - 4 (Revised 2022) in Capital Goods and Manufacturing. The contents are sequenced according to the practical exercise contained in NSQF LEVEL - 4 (Revised 2022) syllabus on Trade Theory attempt has been made to relate the theoretical aspects with the skill covered in each exercise to the extent possible. This correlation is maintained to help the trainees to develop the perceptional capabilities for performing the skills.

The trade theory has to be taught and learnt along with the corresponding exercise contained in the manual on trade practical. The indications about the corresponding practical exercises are given in every sheet of this manual.

It will be preferable to teach/learn trade theory connected to each exercise at least one class before performing the related skills in the shop floor. The trade theory is to be treated as an integrated part of each exercise.

The material is not for the purpose of self-learning and should be considered as supplementary to class room instruction.

© NIMI NOT TO BE REPUBLISHED

CONTENTS

Lesson No.	Title of the Lesson	Learning Outcome	Page. No.
	Module 1 : Jigs & Fixtures		
2.1.84	Introduction to tooling		1
2.1.85	Elements of jigs and fixtures		6
2.1.86-87	Types of press tools/operation	1,2	19
	Module 2 : CNC Lathe		
2.2.88	Safety precautions - Safe Handling of Tools / Equipments		25
2.2.89	Machine Specification		27
2.2.90	Machine control and its functions	3	29
2.2.91	Co-ordinate systems and itspoints		33
2.2.92	CNC lathe types		36
	Module 3 : CNC Machining Centre		
2.3.93	Safety precautions		52
2.3.94	Co-ordinate system and point	4	56
2.3.95-97	Types of machining centre and its axes		58
	Module 4 : CAM EDM		
2.4.98	2D and 3D machining with CAM software		78
2.4.99	Safety precaution of EDM wire cut machine	5,6	95
2.4.100& 2.4.101	Introduction of electrical discharge machine/ die sinking machine electrodes		96
2.4.102 & 2.4.103	Introduction of wire EDM		101
	Module 5 : Blanking / Piercing Tool		
2.5.104	Basic design of guide plate tool		107
2.5.105	Stock material - Types and Conditions	7,8	122
2.5.106	Punches		127
2.5.107	Stoppers		136
	Module 6 : Hydraulics & Pneumatics		
2.6.108	Basic principle of hydraulics & pneumatic system	9	163
	Module 7 : Compound Tool		
2.7.109	Compound tool	10	171
	Module 8 : Progressive Tool		
2.8.110	Principles of Bending	11	175
2.8.111	Spring Back		182

© NIMI NOT TO BE REPUBLISHED

Lesson No.	Title of the Lesson	Learning Outcome	Page. No.
	Module 9 : Machine Maintenance		
2.9.112	Lubricants and lubrication		186
2.9.113	Automatic lubrication system		194
2.9.114	Maintenance and its types	12	196
2.9.115	System of symbol and colour coding for lubricants		197
2.9.116	Possible causes for failure and remedies		198
	Module 10 : Bending Tool/ Draw Tool		
2.10.117	Forming	13	203
2.10.118	Factors affecting tool life	14	214

LEARNING / ASSESSABLE OUTCOME

On completion of this book you shall be able to

Sl.No.	Learning / Outcome	Refer Ex:No
1	**Manufacturing of drill Jig and produce component on drill machine by using Jigs and check for correctness. (Simple template & Plate Jig)**	**2.1.84 - 2.1.85**
2	**Manufacturing of fixtures (milling, turning and grinding) & test.**	**2.1.86 - 2.1.87**
3	**Set (both job and tool) CNC turning centre and produce components as per drawing by preparing part programme.**	**2.2.88 - 2.2.92**
4	**Set (both job and tool) CNC machining centre vertical and produce components as per drawing by preparing part programme.**	**2.3.93 - 2.3.97**
5	**Perform 2D & 3D machining with CAM software.**	**2.4.98**
6	**Produce components using Electric Discharge Machine (EDM) and Wire EDM as per drawing by preparing part programme with accuracy of ± 0.02mm.**	**2.4.99 - 2.4.103**
7	**Manufacturing of blanking(simple) die set for square/ round/ rectangular/elliptical component and verify the component.**	**2.5.104 - 2.5.106**
8	**Construct a Piercing & Blanking tool & test and verify the component. (Individual)**	**2.5.107**
9	**Construct circuit of pneumatics and hydraulics observing standard operating procedure and safety aspect.**	**2.6.108**
10	**Construct a Compound Tool & test and verify the component. (Group of 5 trainees)**	**2.7.109**
11	**Construct a Progressive tool & test and verify the component. (Group of 5 trainees)**	**2.8.110 & 111**
12	**Plan and perform simple repair, overhauling of different machines and check for functionality. *[Different Machines – Drilling Machine, milling machine and Lathe]***	**2.9.112 - 116**
13	**Manufacture "V" bending tool & test. (5 trainees in a group)**	**2.10.117**
14	**Construct a draw tool (single stage) and test to verify the component. (5 trainees in a group)**	**2.10.118**

© NIMI NOT TO BE REPUBLISHED

SYLLABUS

Duration	Reference Learning Outcome	Professional Skill (Trade Practical) (With indicative hour)	Professional Knowledge (Trade Theory)
Professional Skill 22 Hrs; Professional Knowledge 15 Hrs	Manufacturing of drill Jig and produce component on drill machine by using Jigs and check for correctness. (Simple template & Plate Jig) (NOS: CSC/N0316)	84. Make simple drilling jig (12 hrs.) 85. Manufacturing of ring jigs, box jigs, and diameter jigs. (10 hrs.)	Introduction to tooling. Introduction to Jigs and Fixtures, Plane of movements, possible movements of work piece, location of work piece, types of Jigs, Types of Fixtures, Jigs/ fixture and machine relations. Method of restricting the possible movement (principle, 3-2-1 pin method). Locating method. Introduction of locating devices, its material, types of locators, locator for flat, surface, internal diameter and external profile. Clamping and work holding devices: Clamping devices, types of clamps for jig and fixture. Material for and clamps. Drill Bushes Type of drill jigs. Type of fixture. Fixture and machine relations, cutting force on jigs and fixtures, elements of jigs and fixtures, jigs and fixture cutting tool relations, design of jigs and fixtures, failure of jigs and fixtures. (15 hrs.)
Professional Skill 37 Hrs; Professional Knowledge 18 Hrs	Manufacturing of fixtures (milling, turning and grinding). (NOS: CSC/N0316)	86. Manufacturing of milling fixture and application. (12 hrs.) 87. Manufacturing of grinding fixture and application. (25 hrs.)	Types of press Tools/ Operations: Guide Plate tool, piercing tool, blanking tool, progressive tool, compound tool, cut off tool, parting tool, etc. Theory of Shearing: Shearing Theory Description in Press Tool (18 hrs.)
Professional Skill 62 Hrs; Professional Knowledge 17 Hrs	Set (both job and tool) CNC lathe and produce components as per drawing by preparing part programme. (NOS: CSC/N0120)	88. Study of CNC lathe, key board and specifications. (05hrs.) 89. Machine starting & operating in Reference Point, JOG, and Incremental Modes. (12 hrs.) 90. Co-ordinate system points, assignments and simulations Absolute and incremental programming assignments and simulations.(15 hrs.)	Safety Precautions: Safe handling of tools, equipment & CNC machines, CNC turning with FANUC CNC CONTROL- (Fanuc-Oi-T latest) CNC Machine & Control specifications. CNC system organization Fanuc 0i-T. Coordinate systems and Points. CNC lathe, Types, Machine axes.(17 hrs.)

© NIMI NOT TO BE REPUBLISHED

		91. Co-ordinate points, assignments and simulations. Identification of machine over travel limits and emergency stops. (10hrs.) 92. Work and tool setting. Automatic Mode operation: facing, profile turning, drilling, tapping, reaming, thread cutting etc. (20 hrs.)111 Work and tool setting. Automatic Mode operation: facing, profile turning, drilling, tapping, reaming, thread cutting etc. (25hrs.)	
Professional Skill 69 Hrs; Professional Knowledge 17 Hrs	Set (both job and tool) CNC machining centre and produce components as per drawing by pre-paring part programme. (NOS: CSC/N0123)	93. Study of CNC Machining centre, key board and specifications. (05 hrs.) 94. Machine starting & operating in Reference Point, JOG, and Incremental Modes. (08 hrs.) 95. Co-ordinate system points, assignments and simulations Absolute and incremental programming assignments and simulations. (15 hrs.) 96. Polar co-ordinate points, assignments and simulations. Identification of machine over travel limits and emergency stops. (18 hrs.) 97. Work and tool setting. Automatic Mode operation: Face Milling, profile milling, drilling, tapping, reaming etc. (23 hrs.)	**Safety Precautions:** Safe handling of tools, equipment & CNC machines, CNC Mill with FANUC CNC CONTROL- (Fanuc-0i-M latest) CNC Machine &Control specifications. CNC system organization Fanuc-0i-M. Co ordinate systems and Points. CNC Machines Milling, Types, Machine axes. (17 hrs.)
Professional Skill 40 Hrs; Professional Knowledge 12 Hrs	Perform 2D & 3D machining with CAM software. (NOS: CSC/N0115)	98. 2D and 3D machining with CAM software. (40 hrs.)	Preparing for contour and profile machining. (12 hrs.)
Professional Skill 50 Hrs; Professional Knowledge 12 Hrs	Produce components using Electric Discharge machine (EDM) and Wire EDM as per drawing by preparing part programme with accuracy of ± 0.02mm. (NOS: CSC/N0118)	99. Identify different parts of EDM/ wire cutmachining centres and read specification. (08 hrs.) 100. Perform machine starting and operating in reference point. (08 hrs.) 101. Identification of machine over travel limits on emergency. (10hrs.)	Safety precaution – Safe handling of tools, equipment of EDM/ wire cut machine. Control specification and machine axes. Describe machine tool elements, feed drives. Advantage and disadvantage of wire cut machine. (12 hrs.)

© NCVET NOT TO BE REPUBLISHED

		102. Part program preparation entry, editing, and simulation on wire cut machine software of wire cut machine. (20 hrs.) 103. Carry out tool path tool path simulation. (4 hrs.)	
Professional Skill 75 Hrs; Professional Knowledge 25 Hrs	Manufacturing of blanking (simple) die set for square/ round/ rectangular/ elliptical component and verify the component. (individual) (NOS: CSC/N9478)	104. Manufacturing die as per drawing dimension and maintain die clearance and die land, provide angular clearance after die land. (25 hrs.) 105.Manufacturing of Punch as per drawing dimension. (15 hrs.) 106. Manufacturing stripper plate bottom plate (die press) tap plate, punch holder, gauges and shank, thrust plate, stop pin. (35hrs.) (May use the plates from turning, milling and grinding exercises)	Cutting clearance: Importance of cutting clearance, typical appearance characteristics, determination of punch and die dimensions. Land and angular clearance: Importance if angular clearance, methods of providing angular clearance. Basic design of guide plate tool. Alignment technique between Punch and Die while assembly. Guide Plate Tool: Construction, function of elements, related design. Cutting force: calculation of cutting force for press tool operations, selection of suitable press, method of reducing cutting force. Stock material: Relation of piece part and stock strip, stock material used in press work, differentiate stock strip and unit stock. Strip layout: Importance of strip layout, different types of strip layout, economic layout. Punch: Cutting punches, noncutting punches, hybrid punches, types of punches, selection of punches. Buckling of punches: Buckling theorem, problems, types of loading coming on a punch, determining of the size of the punch. Die Block: Types of dies, requirement of die block. (25 hrs.)
Professional Skill 50 Hrs; Professional Knowledge 18 Hrs	Construct a Piercing & Blanking tool & test and verify the component. **(Individual)** (NOS: CSC/ N9479)	107. Construct a piercing and blanking tool as per the design given. (all components of tool to be the exercises of other machines) Press safety shut height (50 hrs.)	Stoppers: Function, basic stop principles, construction of different types of stoppers. Strippers: Function, types of stripper, constructional **details Gauge:** Function of gauge, types of gauge. Pilots: Purpose of pilot, types of pilot, function of pilot, different methods of piloting. Side cutter Shank and positioning Die Set: Different types of die set, die set components, die set material, types of die set, shut height, day light.

© NIMI NOT TO BE REPUBLISHED

			Presses: Classification of press, types of a press, parts of a press, press selection, strip feeding arrangement, die cushion. **Blanking Tool:** Construction, function of elements, related design. **Piercing Tool:** Construction, function of elements, related design. **Ejector and shedders** Progressive tool: Construction, function of elements, related design of progressive too. (18 hrs.)
Professional Skill 10 Hrs; Professional Knowledge 05 Hrs	Construct circuit of pneumatics and hydraulics observing standard operating procedure& safety aspect. (NOS: CSC/ N9480)	108 Identification and familiarisation of various types of hydraulic & pneumatic elements such as cylinder, valves, actuators and filters. (10 hrs.)	Basic principles of hydraulics/ pneumatics system, advantages and disadvantages of hydraulics and pneumatics systems, theory of Pascal's law, Brahma's press, Pressure and flow, types of valves used in hydraulics and pneumatics system. (05 hrs.)
Professional Skill 75 Hrs; Professional Knowledge 15 Hrs	Construct a Compound Tool & test and verify the component. (Group of 5 trainees) (NOS: CSC/ N9481)	109. Construct a compound tool as per the drawing using various tool room machines and equipments. (75 hrs.)	Compound Tool: Introduction, description of different parts and their function, calculation of clearance, construction. (15 hrs.) Sensors for Distance and Displacement -LVDT-Linear Potentiometer -Ultrasonic and Optical Sensors-Industrial Application. (18 hrs.)
Professional Skill 150Hrs; Professional Knowledge 30 Hrs	Construct a Progressive tool & test and verify the component. (Group of 5 trainees) (NOS: CSC/ N9482)	110. Construct a progressive tool as per the drawing (145 hrs.) 111. Prepare different types of documentation as per industrial need by different methods of recording information for the project.(05 hrs.)	Bending tool: Principles of bending, plastic deformation due to bending, bending elements, blank length, bending stress, bending force, spring back, stripping "U" bend, effect of grain direction. (30 hrs.)

© NIMI NOT TO BE REPUBLISHED

Professional Skill 50 Hrs; Professional Knowledge 10 Hrs	Plan and perform simple repair, overhauling of different machines and check for functionality. [Different Machines – Drill Machine, milling machine and Lathe] (NOS: CSC/ N0901)	112 Perform Periodic Lubrication system on Machines. (10 hrs.) 113. Perform simple repair work. (15 hrs.) 114. Perform the routine maintenance with check list. (05 hrs.) 115. Inspection of Machine tools such as alignment, levelling etc. (10 hrs.) 116. Accuracy testing of machine tools such as geometrical parameters. (10 hrs.)	Lubricating system-types and importance Maintenance: Definition, Types and its necessity. System of symbol and colour coding. Possible causes for failure and remedies. (10 hrs.)
		117. Construct a "V" bending tool as per the drawing (75 hrs.)	Forming tool: Construction, function of elements, related design Drawing Tool: Description of drawing and deep drawing, deep drawing cylindrical cup, force acting on a component while drawing, metal flow during drawing, wrinkling and puckering, blank development, drawing force, press capacity, blank holding force, die and punch radius, draw beeds, air vents, lubrication, number of draws drawing flanged components, metal flow in rectangular shells, fault occurring during deep drawing. (20 hrs.)
Professional Skill 75 Hrs; Professional Knowledge 12 Hrs	Construct a draw tool (single stage) and test to verify the component. (5 trainees in a group) (NOS: CSC/N9484)	118. Construct a draw tool (single stage) as per the drawing given using various machine tools and equipments.(75 hrs.)	Factors effecting tool life Fine Blanking Tool. (12 hrs.)

© NIMI NOT TO BE REPUBLISHED

© NIMI
NOT TO BE REPUBLISHED

Introduction to tooling

Objectives: At the end of this lesson you shall be able to
- **describe key roles of toolings in manufacturing and production**
- **define jigs and fixtures**
- **differentiate jigs and fixtures.**

Tooling involves creating and using specialized tools and machinery for manufacturing production, or machining It ranges from simple hand tools to advanced equipment and is crucial in industries like manufacturing, construction and machining

Tooling-serves key roles in manufacturing and production

Well – designed tools boost efficiency by streamlining tasks, reducing manual labour, and minimizing downtime.

- Tooling ensures high precision in cutting, shaping, and assembly vital for industries with right tolerances
- Efficient tooling minimizes waste, errors, and optimizes production, reducing costs
- Tooling provides consistent, repeatable results, critical in mass production and for identical parts.
- Properly provides consistent, repeatable results, critical in mass production and for identical parts.
- Properly designed tools prioritize safety, reducing the risk of accidents during manufacturing.
- Tooling includes jigs, fixtures, moulds, dies, cutting tools, and CNS machines. Each tool is customized for specific tasks, ensuring efficient and accurate performance. E.g. (Fig 1-3)
- Tooling is applied in manufacturing construction and machining industries to enhance processes, quality, and safety.

Fig 1

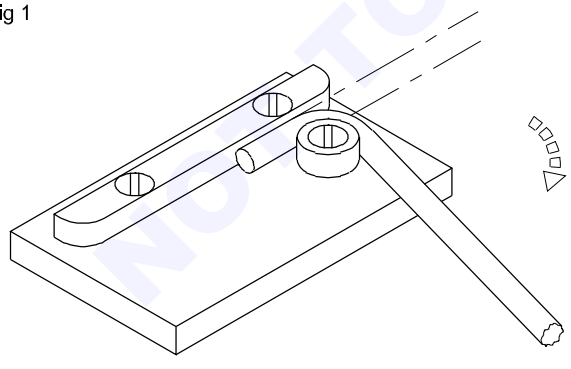

BENDING FIXTURE

T.J20N218411

Jigs and fixtures are essential tools in precision manufacturing, ensuring accuracy in processes where even tiny measurements matter. They guide, support, or secure work pieces during manufacturing serving a crucial role in various industries.

Fig 2

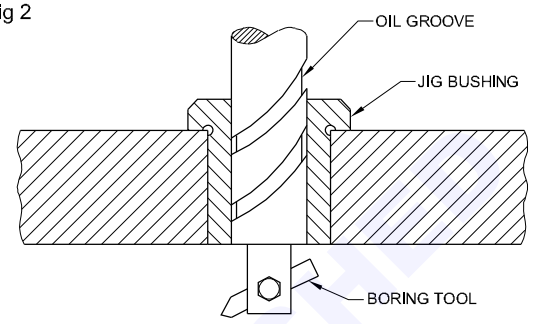

BORING JIG

T.J20N218412

Fig 3

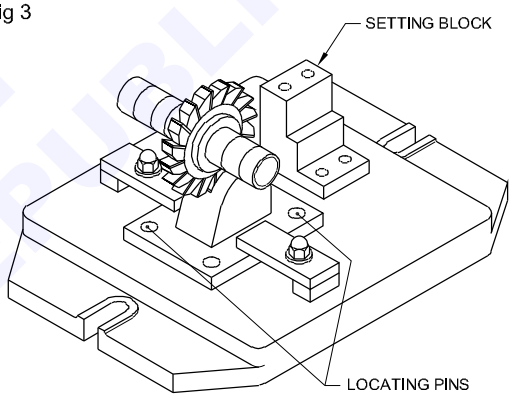

MILLING FIXTURE

T.J20N218413

Jigs and fixtures aid in producing precise and consistent parts by guiding or holding work pieces during operations.

They reduce errors and enhance efficiency by providing templates or secure work piece placement.

Difference between figs & Fixtures

Jigs (Fig 4)

Fig 4

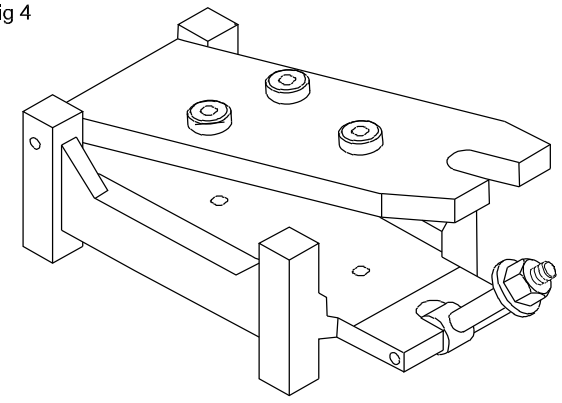

DRILL JIG

T.J20N218414

NOT TO BE REPUBLISHED © NIMI

Guide, hold or position workpiece during manufacturing processes like drilling

Ensure accuracy by constraining workpiece movement.

Ideal for repetitive tasks, improving efficiency by providing a template or guide.

Fixtures (Fig 5)

Securely hold workpieces during machining, assembly or inpsection

Prevent workpiece movement, crucial for precision and accuracy

Focus on holding workpieces in a fixed position rather than guiding the machining process.

Jigs and fixture are integral in:

Mass production of automotive parts

Fig 5

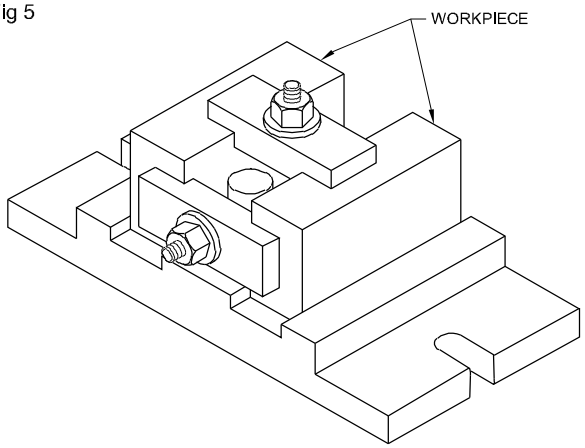

Precision crafting of aerospace components.

Delicate assembly of electronics.

Types of drill jigs

Objective: At the end of this lesson you shall be able to
- **describe the construction of different types of jigs**
- **describe the construction of different types of fixtures.**

Drill jigs

Drill jigs may be divided into two types

- Open
- Closed.

Open jigs are used when the operation is to be done only on one side of the piece. Closed jigs (Box jig) are used when the operations are to be done on more than one side of the piece. Jigs are identified according to the way they are built. Most commonly used jigs are:

- Template Jig
- Plate Jig
- Table Jig
- Sandwich Jig
- Angle plate Jig
- Modified angle plate Jig
- Box Jig
- Channel Jig
- Leaf Jig
- Indexing Jig.

Types of drill jigs

Template jigs: This type of jigs fits over,on or into the work and is not usually clamped. they are simple and cheap. They may or may not have guide bushes. When bushes are not used the whole jig plate may be hardened.(Fig 1)

Plate jig (Figs 2 & 3): The jig is similar to template jig. The only difference is that it has built in clamps for holding the work.

Fig 1

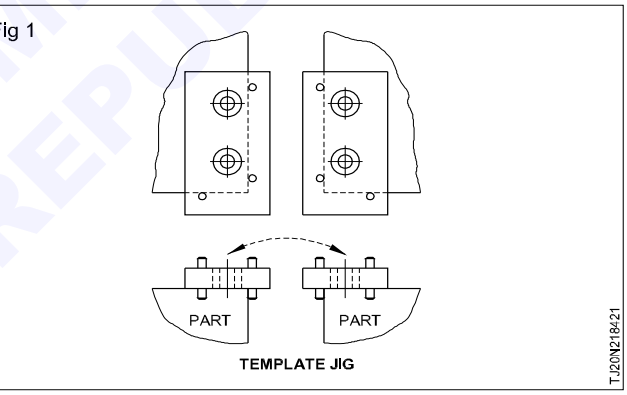

Fig 2

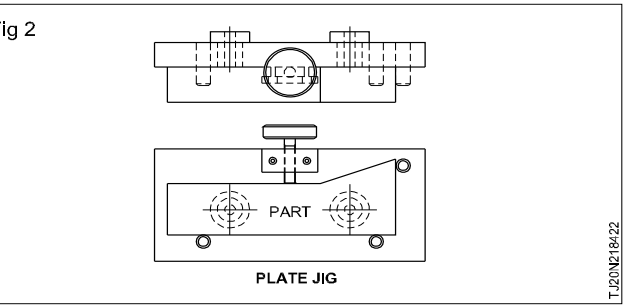

Fig 3

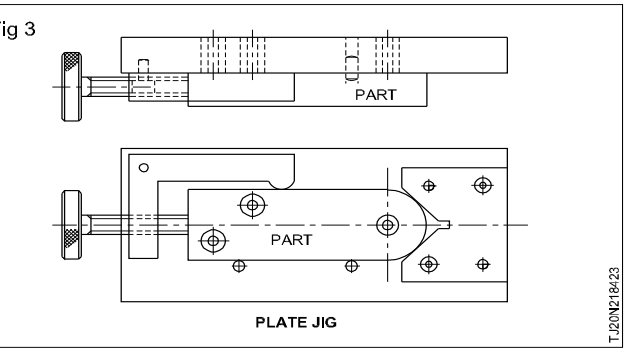

NOT TO BE REPUBLISHED

Table jig (Fig 4): A Plate jig with legs are called a table jig. These jigs are used for large work pieces.

Fig 4

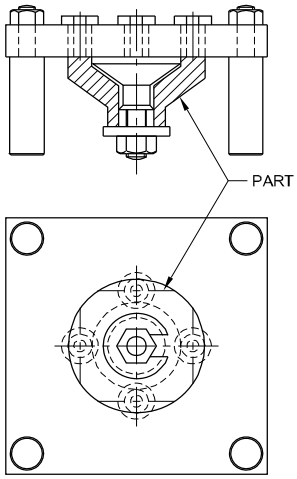

TABLE JIG

Sandwich Jig (Fig 5): These are a form of plate jig with back plate. this type of jig is ideal for thin or soft parts which could bend or warp if any other type of jig is used.

Fig 5

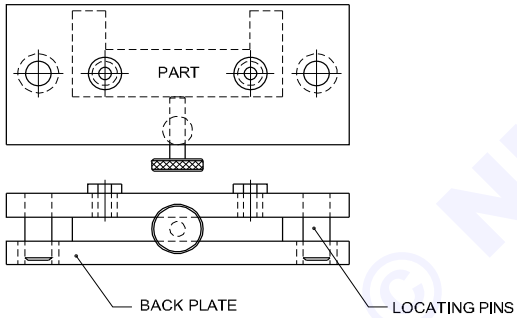

SANDWICH JIG

Angle plate jig: These jigs are used to hold work which are to be drilled at right angles to their mounting locators. (Fig 6).

Fig 6

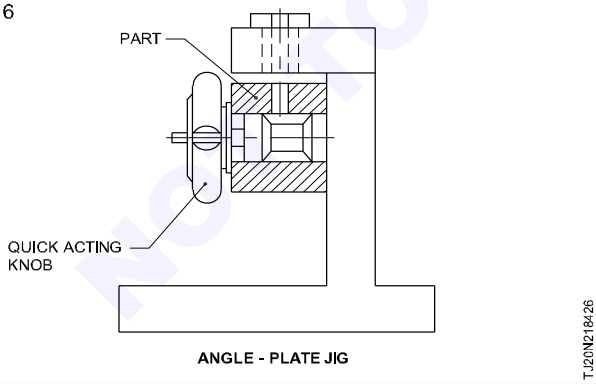

ANGLE - PLATE JIG

Modified angle plate jig: These jigs are used for drilling at angles other than 90°. (Fig 7)

Box jig: This type of jig allow the part to be completely machined on every surface without repositioning the part in the jig. (Fig 8)

Fig 7

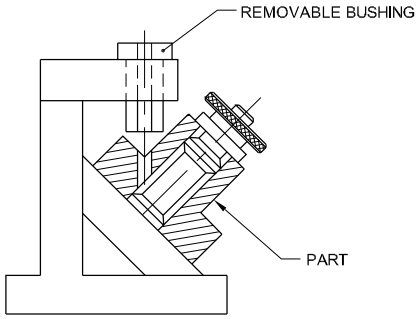

MODIFIED ANGLE - PLATE JIG

Fig 8

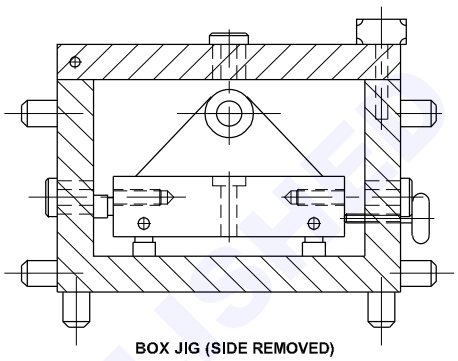

BOX JIG (SIDE REMOVED)

Channel jigs (Fig 9): They are the simplest form of box jigs.

The work piece is held between two sides and machined from the third.

Fig 9

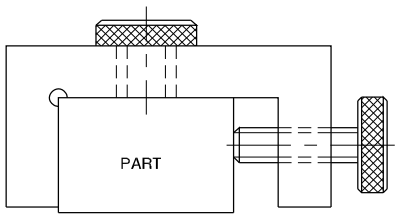

CHANNEL JIG

Leaf jig: These are small box jigs with a hinged leaf. Easy loading and unloading is possible in these jigs. Leaf jigs are usually equipped with a handle for easier movement (Fig 10).

Fig 10

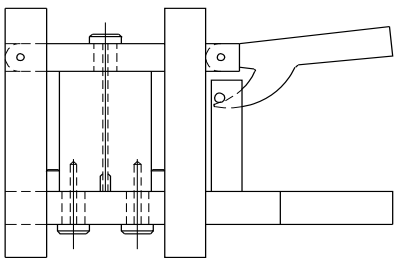

LEAF JIG

Indexing jig (Fig 11): Indexing jigs are used to accurately space holes on other machined area around a part. The jig uses the part being machined as a reference plate. A spring loaded plunger indexes the part.

© NIMI NOT TO BE REPUBLISHED

Fig 11

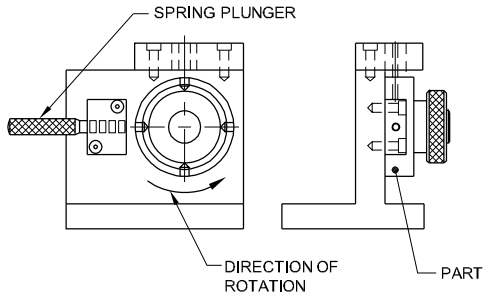

INDEXING JIG

TJ20N21842B

Classification of fixtures

Fixtures are classified by the type of machine on which they are used. If a fixture is made for a milling machine it is called a milling fixture. Some of the most commonly used fixtures are turning fixture, milling fixture, welding fixture, boring fixture, assembly fixture, inspection fixtures etc.

Types of fixtures : Types of fixtures are determined mainly by how the tool is used. Because of the increased tool forces, fixtures are built stronger and heavier than jigs. The most common type of fixtures are

Plate fixture : These are the simplest form of fixtures. It is made from a flat plate which has locater and clamps to locate and hold the part (Fig 12).

Fig 12

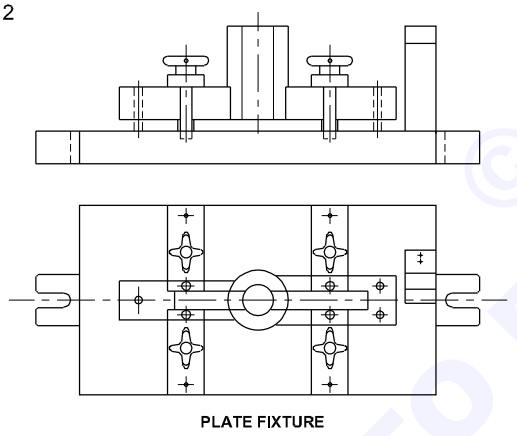

PLATE FIXTURE

TJ20N21842C

Angle plate fixture : This fixture is used for machining the part at right angle to the locator. (Fig 13)

Fig 13

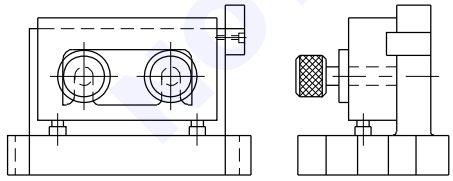

TJ20N21842D

Modified angle plate fixture : This fixture is used for machining the part at angles other than 90^0.(Fig 14)

Vice jaw fixture : This fixture is used for machining small parts. The standard vice jaws are replaced with jaws that are made to suit the work. (Fig 15)

Indexing fixtures : These fixtures are used for parts that require machining on evenly spaced surfaces.(Fig 16)

Fig 14

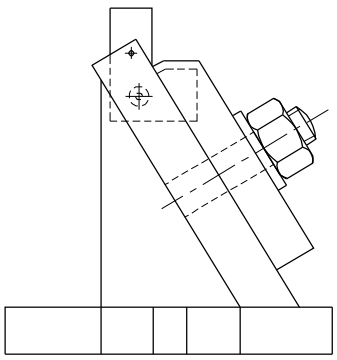

MODIFIED ANGLEPLATE FIXTURE

TJ20N21842E

Fig 15

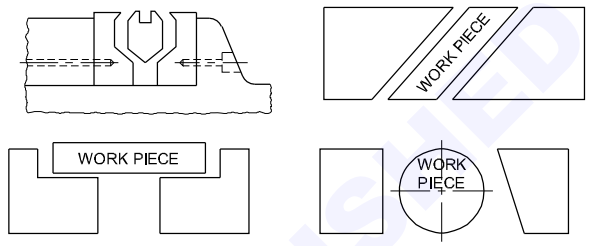

VICE JAW FIXTURES

TJ20N21842F

Fig 16

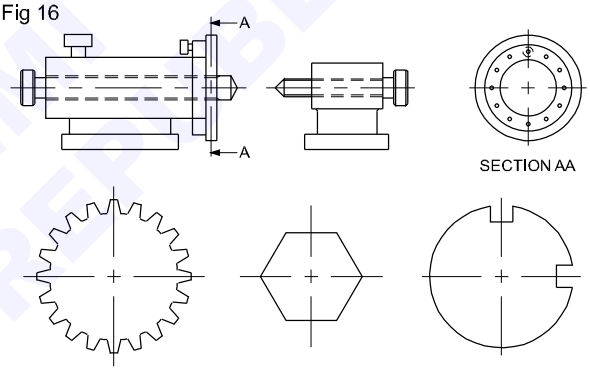

TJ20N21842G

Lathe fixtures

Grip the rotating work piece securely to the fixtures to resist torsion forces. The fixtures should be rigid and overhang should be minimum possible. Fixtures should be accurately balanced to avoid vibrations at high spindle speeds. (Fig 17)

Fig 17

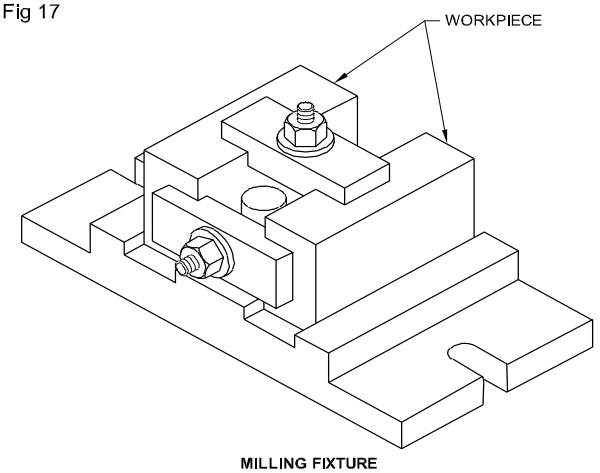

MILLING FIXTURE

TJ20N21842H

© NIMI NOT TO BE REPUBLISHED

Milling fixtures

The fixtures should be designed so as to permit rapid loading and unloading of the work. It should have ample chip clearance. The fixture should be as strong and rigid as possible without the addition of any extra weight. Clamps designed for milling fixtures must be strong. (Fig 18)

Fig 18

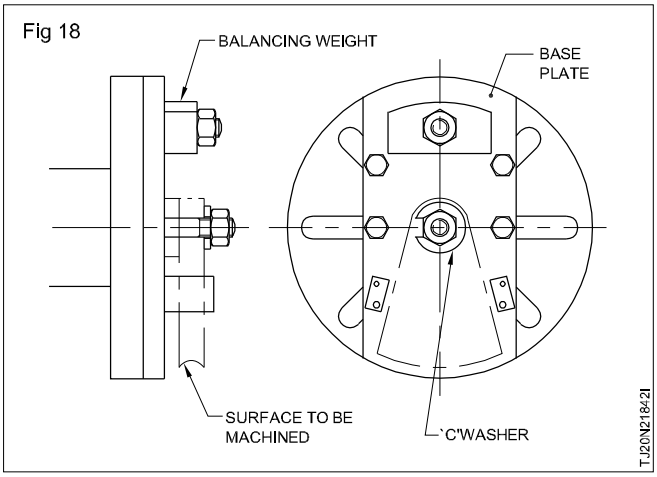

Grinding fixtures

These fixtures should be rigid and there should be good clamping with the machine. The piece removal must be made easy. Clearing facility and necessary gap for chip removal should be provided. (Fig 19)

Fig 19

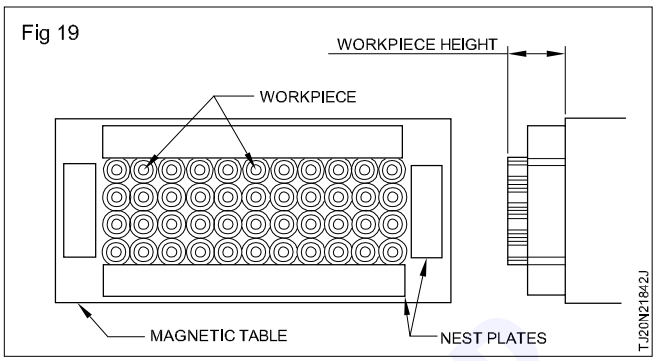

© NIMI NOT TO BE REPUBLISHED

Elements of jigs and fixtures

Objective: At the end of this lesson you shall be able to
- **obtain the knowledge of element of jigs & fixtures.**

Various elements of jigs and fixtures and their details are follows.(Fig 1)

1 Body

2 Locating devices

3 Clamping devices

4 Tool guide (jigs bushing)

1 Body: The jig body is generally made of cast iron by casting process or fabricated by welding together various slabs and bars or mild steel. It may be heat treated to relief the stresses. Body is the most prominent feature of the jig. Its main purpose is to support and house the job.

2 Locating devices: The pins of various design and made of hardened steel are the most common locating devices used to locate a work piece in a jig or fixture. The shank of the pin is press fitted or driven into the body of jig or fixture. The locating diameter of the pin is made larger than shank to prevent it from being forced into the jig or fixture body due to the weight of the work piece or cutting forces. Depending upon the mutual relation between the work piece and the pin.

3 Clamping devices: If the work piece can not be restrained by the locating devices or elements. It become necessary to calmp the work piece in jig or fixture body. The most common example of clamping devices is bench vice. The purpose of the clamping is to exert a pressure to press a work piece against the locating surface and hold it there in a position to the cutting forces. In bench vice the movable jaw of the vice exert force on the work piece, their by holding it in correct position of location in the fixed jaw of the vice.

Fig 1

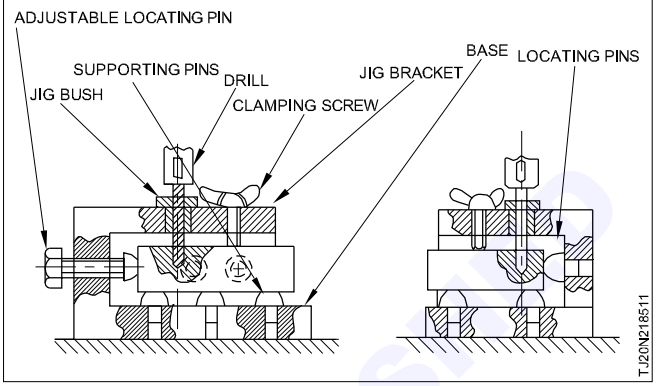

4 Tool guide or jig bushing: Sometimes the stiffness of the cutting tool may be in suffcient to perform certain machining operations. Then to locate the tool relative to the work use is made of guiding parts such as jigs bushing and templates. These must be precise, were resistance and changeable.

5 Design of jigs and fixtures: The design of jigs and fixtures is dependent on numerous factors which are analyzed to achieve an optimum output. Jigs should be made of rigid light materials to facilitate easy handling, as it has to be rotated severally to enable holes to be drilled from different angles. It is recommended that four feet should be provided for jigs that are not bolted on the machine tool, to enabloe the jigs to wobble if not well positioned on the table and thereby alert the operator. Drill jigs provide procedures for proper location of work-piece with respect to the cutting tool, tightly clamp and rigidly support the work-piece during machining, and also guide the tool position and/or fasten the jig on the machine tool.

Location of work piece

Objective: At the end of this lesson you shall be able to
- **identify the types of locators and supports used for jigs and fixtures**
- **specify the use of locators and supports**
- **anaolyze sample parts and select the locating and supporting devices best suited for each**
- **state locating method employed**
- **describe the function of rest in a jig or fixture**

Basic rules for locating

A tool designer must keep the following point in mind while designing the tool:

- positioning the locators
- part tolerance
- Foolproofing
- Duplicate location

Part locating in tool design is a critical aspect that involves restricting the movement of a part and ensuring its proper positioning. This process requires careful planning and skilled execution

Part locators should be an integral part of tool design and not added as an afterthought. Careful planning is essential for effective part locating.

Positioning the locators

Tool designers should consider the following factors when positioning part locators

Ideally, locators should contact the workpiece on a machined surface. This ensures accurate part placement and repeatability of jigs or fixtures.

Locators should be spaced as far apart as possible to allow for the use of fewer locators while maintaining complete contact over the locating surface.

Take precautions to position locators away from areas where chips or foreign matter could interfere. If interference is unavoidable, locators should be relieved to accommodate it (Fig 1)

Fig 1

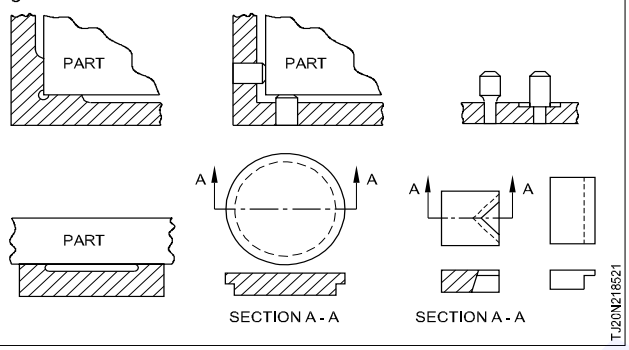

Part tolereance

Design locators to fit the part within its allowabble size limits. Consider the smallest and largest dimensions of the part ot ensure compatibility with all variations.

Foolproofing

Foolproofing is a crucial aspect of tool design to ensure parts are loaded correctly.

Fig 2

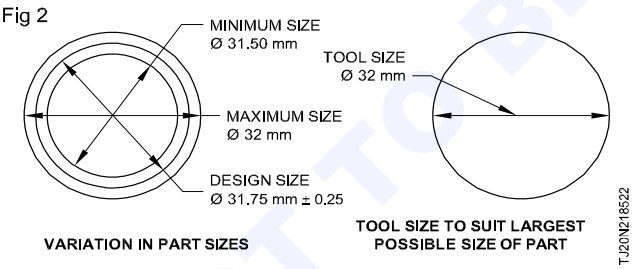

Fig 3a, a pin is included to prevent incorrect loading of a tapered part that must be machined on the tapered end. This pin serves as for proofing.

Fig 3b shown a part with a hole that must be drilled in reference to other holes. Placing a pin in one of these holes prevent incorrect loading.

Foolproofing devices should be kept simple to avoid complicatiing the tools operation

Locating method

In the diverse world of manufacturing parts come in various shapes and sizes, demanding precise adaptable locating methods. Tool designers need to understand different locators and their optimal use to achieve accurate part placement with minimal locators.

Fig 3

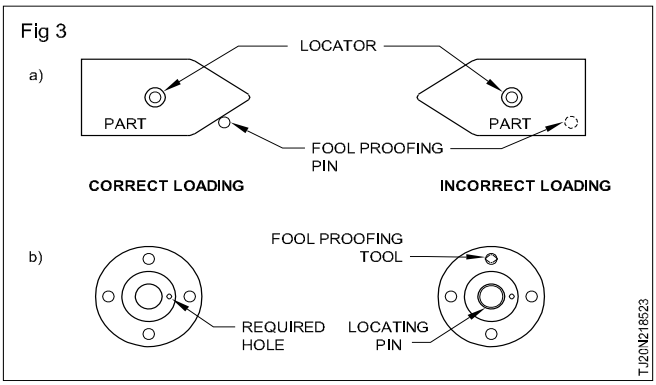

Versatility locating methods

Locator for flat surface

Three primary methods are used to locate workpieces from a flat surface

Solid supports:

These are straightforward and are either machined into the tool base or installed. They are suitable for locating points on machined surfaces. (Fig 4)

Fig 4

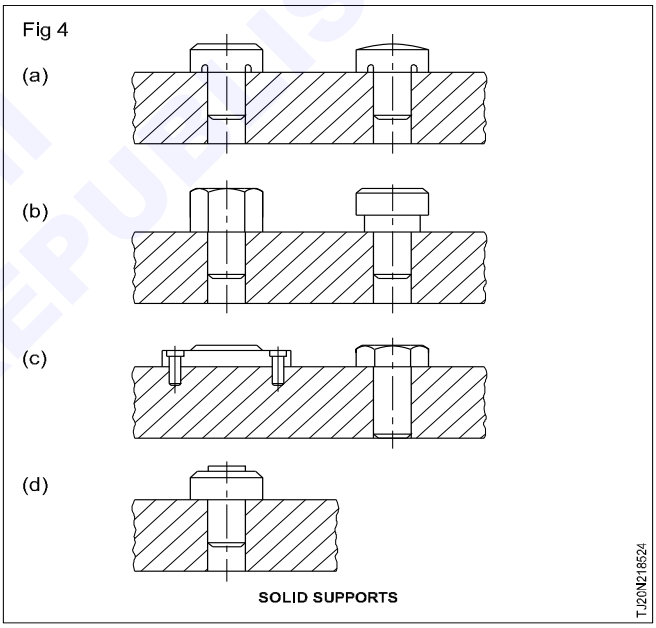

Adjustable supports

Used for rough or uneven surfaces, like cast parts, with options like threaded, spring, or push types. They are often combined with solid locators for leveling. (Fig 5)

Fig 5

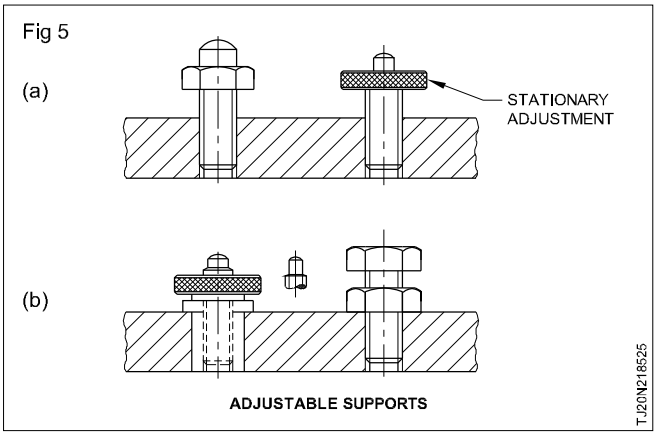

© NIMI NOT TO BE REPUBLISHED

Equalizing supports

These provide balanced support through two connected contact points, crucial for uneven cast surfaces (Fig 6)

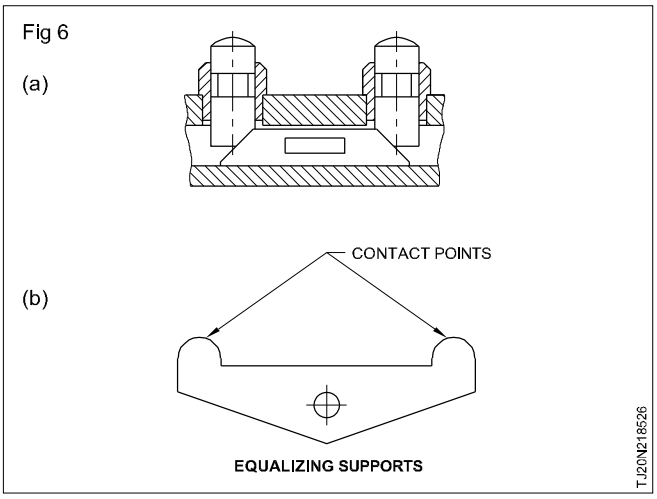

Locating from and Internal Diameter

Locating parts from a hole or pattern is effective for precise positioning. Various locators are used.

Pin-Type locators

Used for smaller holes and for tool alignment. Special bushings are used to replace worn parts (Fig 7)

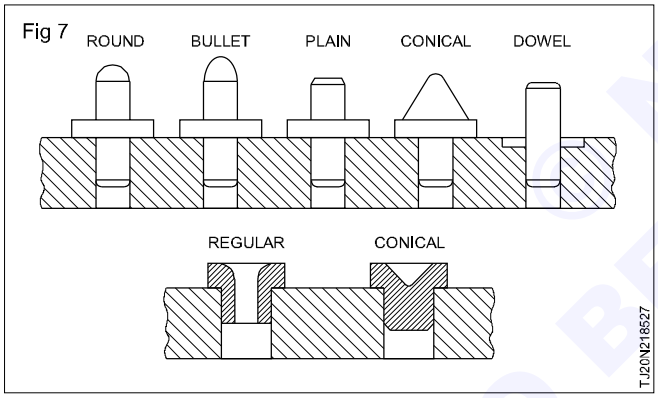

Diamond or Relieved Pins

Used alongside round pins for faster loading and unloading. The diamond pin restricts part movement (Fig 8)

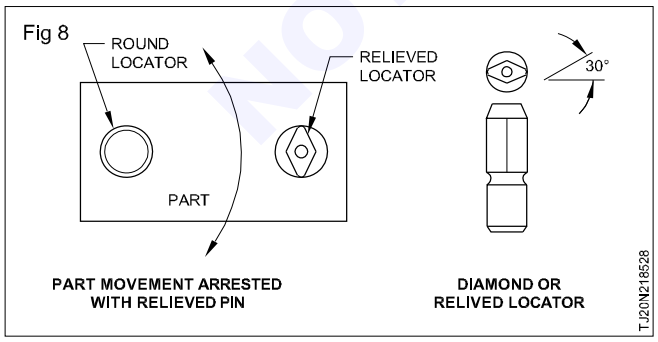

Relieved locators

Reduce contact area between the workpiece and the locator making tool handling easier and less susceptible to dirt or burrs (Fig 9)

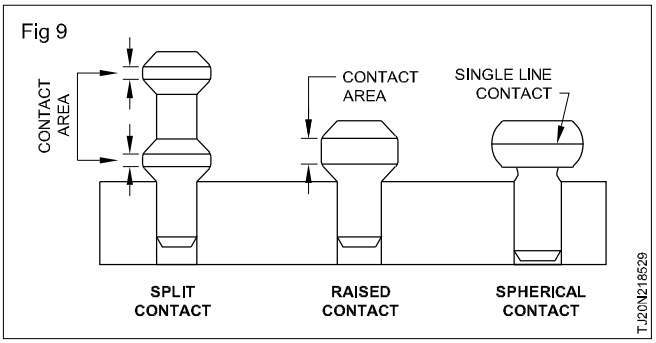

Split contact locator

Suitable for thick workpieces, where only the top and bottom areas of the locator contact the workpiece. (Fig 10)

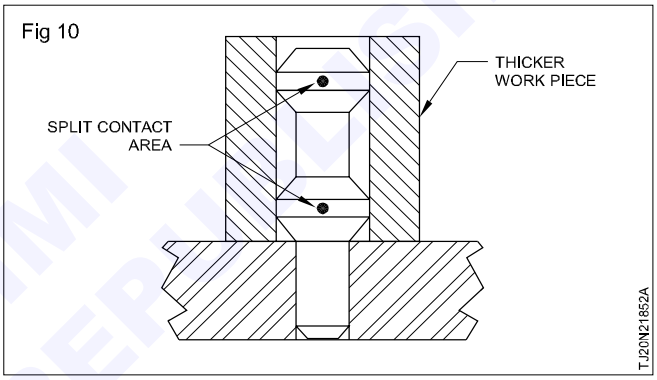

Raised contact locator

Raises the contact point, reducing the impact of dirt, chips, or burrs and preventing binding in the hole (Fig 11)

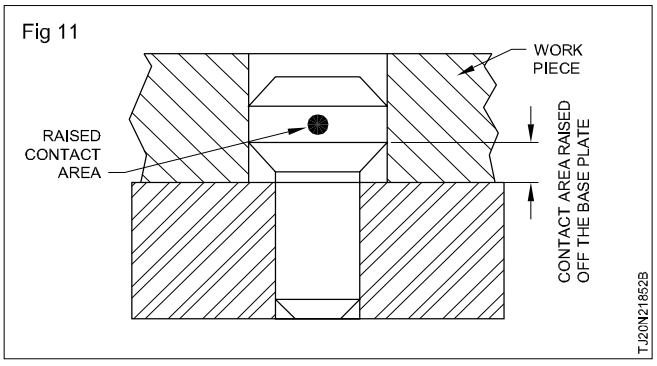

Spherical locator

Offers a single, thin line of contact with the workpiece, eliminating binding but requiring care to manage wear. (Fig 12)

Locating from an External Profile

To locate work based on the external profile or edge

NOT TO BE REPUBLISHED © NIMI

Fig 12

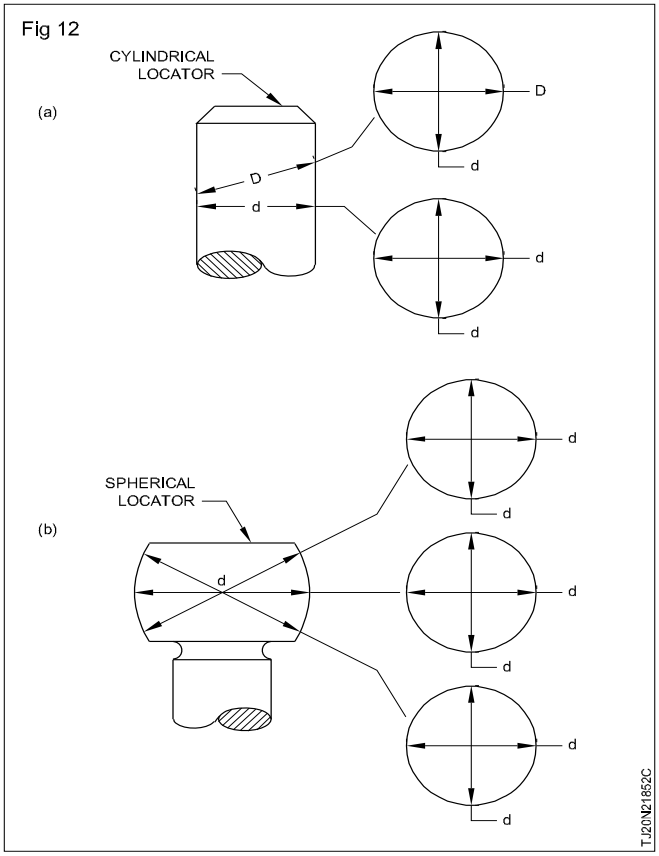

Nesting Locators

Part is enclosed in a depression of the same shape as the part, ensuring accurate locating. Ring nests are common for cylindrical profiles (Fig 13 & 14)

Fig 13

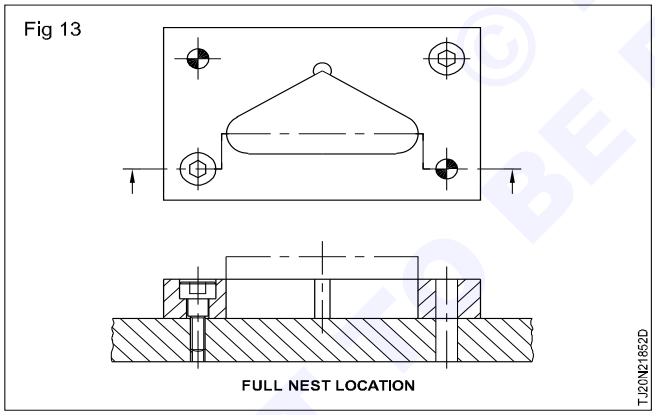

Fig 14

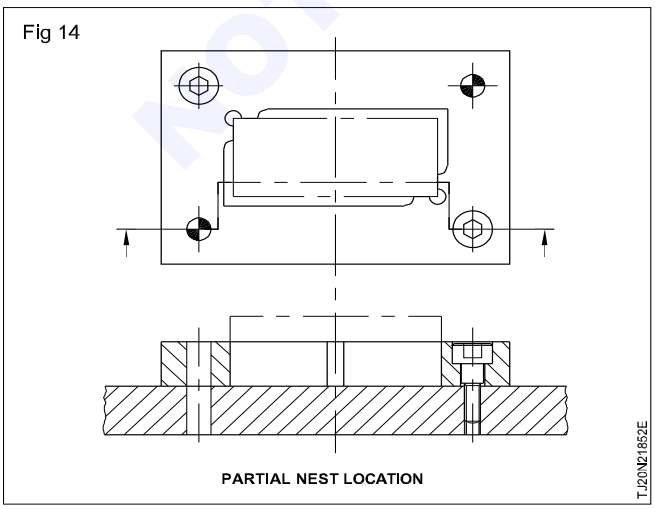

Vee locators

Used for round work and flat work with rounded or angular ends. Offers centralizing features for parts of varying sizes. (Fig 15)

Fig 15

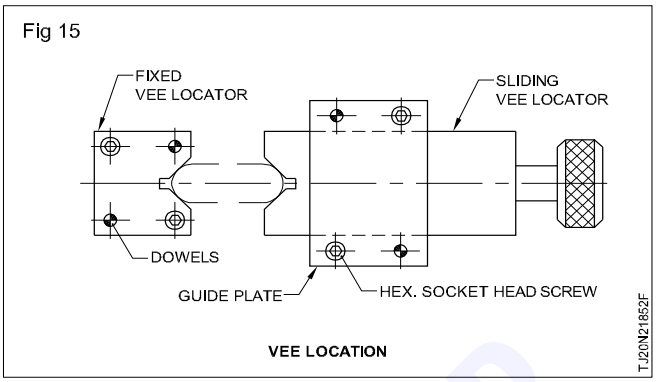

Fixed stop locators

For parts that cannot use nests or vee locators, either machined into the tool bodcy or installed (Fig 16)

Fig 16

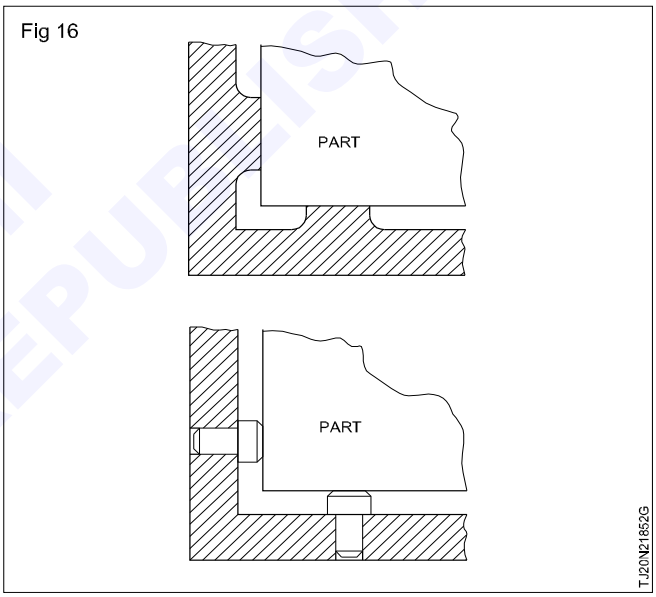

Adjustable - stop locators

These adjustable stops help minize tool cost, offering flexibility in their positioning on the tool body (Fig 17)

Fig 17

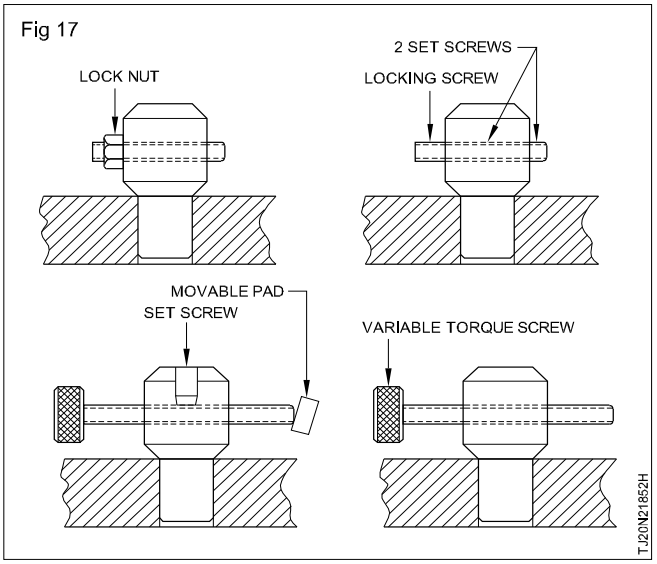

© NIMI NOT TO BE REPUBLISHED

Clamping and workholding

Objective: At the end of this lesson you shall be able to
- **state the function of clamp in a jig or fixture.**

Clamping and work holding

The function of a clamp is to hold a part during machining cycle. Clamps should always contact the work at its most rigid point. This prevents the clamping force from bending or damaging the part. The part must be supported if the work is clamped at a point where the force could bent the part.

Clamps are also positioned so that they do not interfere with the operation of the tool or machine. It is important that the clamps be placed to allow the operator to work safely.

Clamping pressure as a general rule should only be enough to hold the part against the locators. The locators should resist the bulk of the thrust. If a part must be clamped with a great deal of pressure the tool should be redesigned so that the tool thrust is directed at the locators and the tool body. (Fig 1)

Fig 1

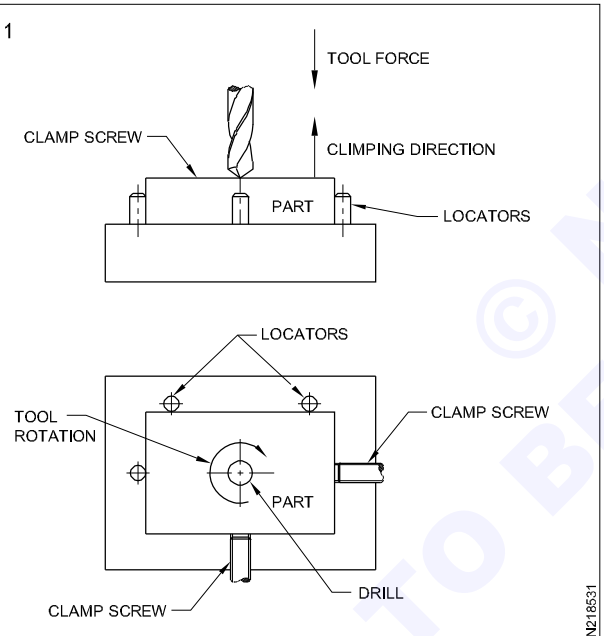

USING CUTTING FORCE TO HOLD A PART

There are various methods of clamping common to both jigs and fixtures. The type of clamp is determined by the shape and size of the part, the type of jig or fixture being used and the work to be done. A clamp should be simple and easier to operate.

Different types of clamps

Strap clamps : Strap clamps are the simplest clamps used for jigs and fixtures. The basic operation of these clamps is the same as a lever. Strap clamps can be grouped in three classes each representing a form of lever. The principles of first, second and third order levers are applied here. (Fig 2 a,b,c)

Fig 2

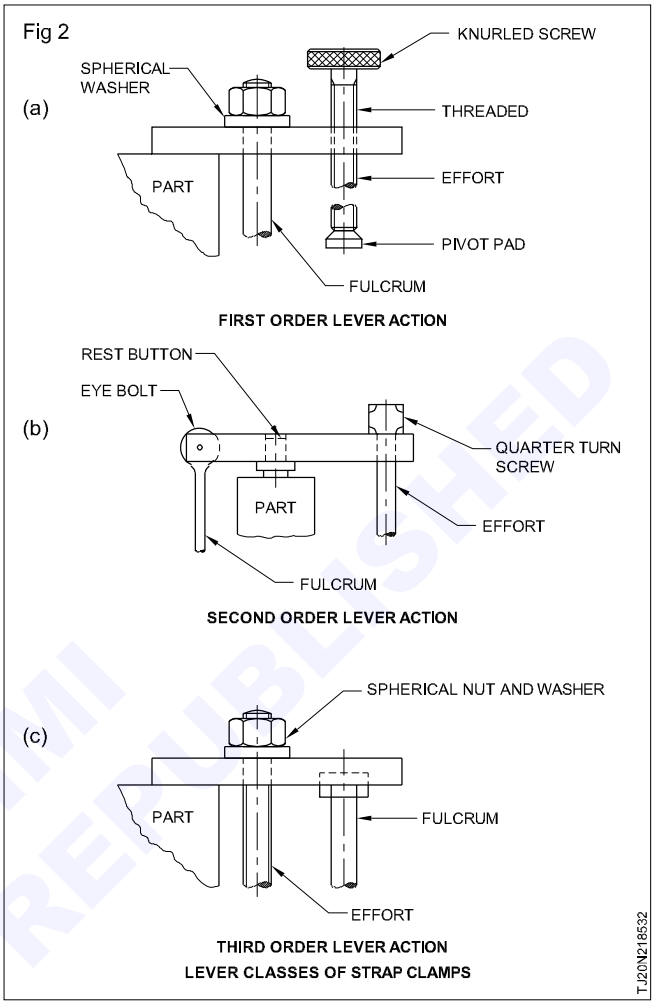

FIRST ORDER LEVER ACTION

SECOND ORDER LEVER ACTION

THIRD ORDER LEVER ACTION

LEVER CLASSES OF STRAP CLAMPS

Strap clamps are used in almost every area of jig and fixture design and construction. Some common types of strap clamps are the hinge clamp, the sliding clamp and the latch clamp. (Fig 3 a,b,c)

The fixture is positioned so that the clamp bar is parallel to the base of the tool at all times. Due to slight differences in part thickness, this is not always possible. To make up for these differences spherical washers or nuts are used. Spherical washers and nuts provide a positive base for clamping elements. (Fig 4)

Fig 4

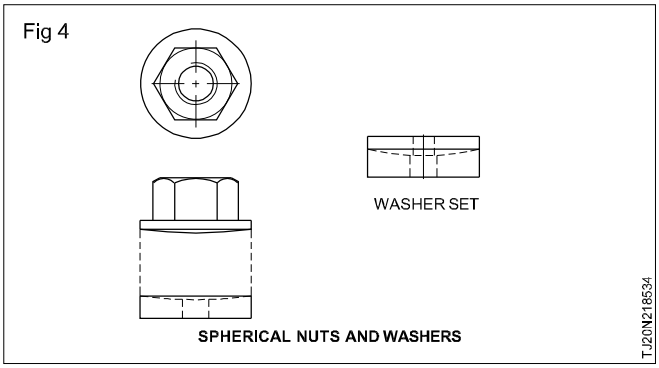

SPHERICAL NUTS AND WASHERS

© NIMI NOT TO BE REPUBLISHED

Fig 3

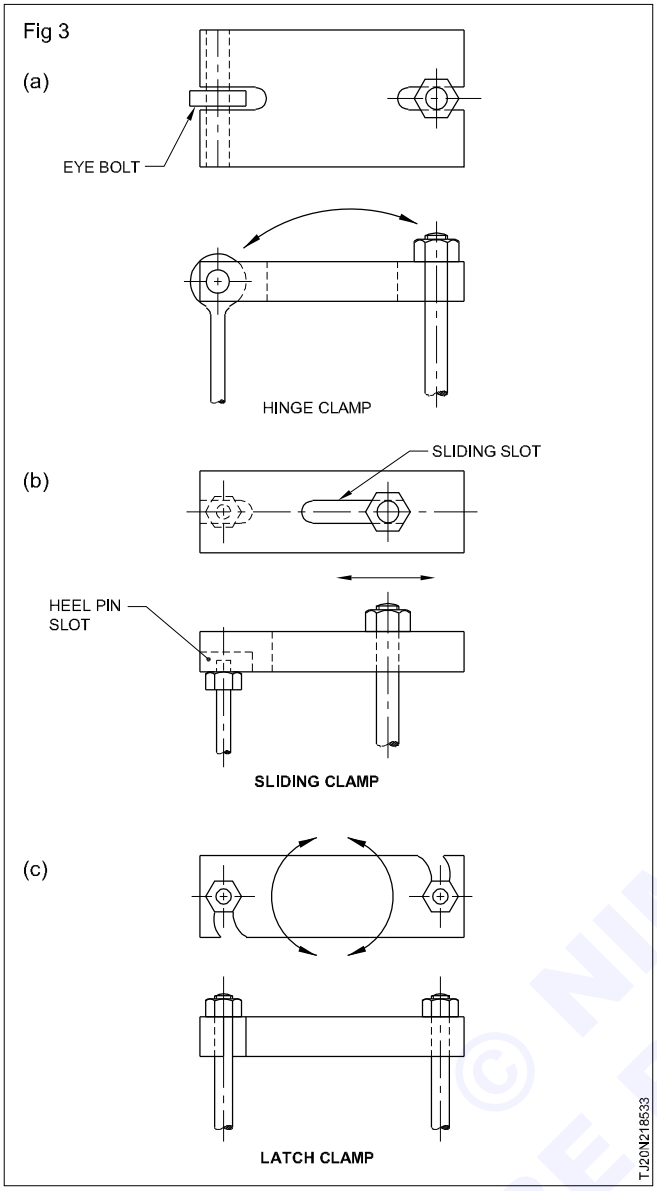

Screw clamps (Fig 5) : Screw clamps are commonly used for jigs and fixtures. They offer unlimited application potential, lower costs and in many cases less complex designs. The only disadvantage in using screw clamps is their relatively slow operation speeds.

Fig 5

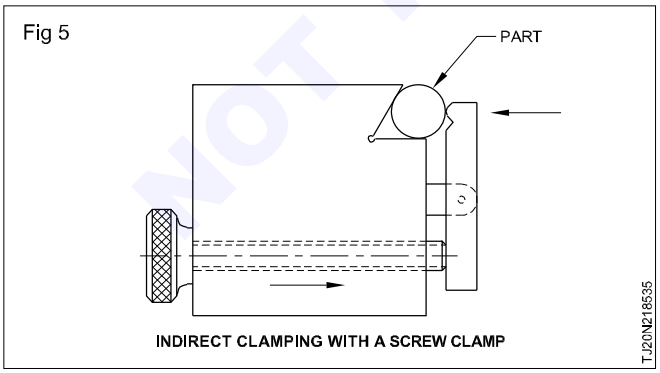

Cam action clamps (Figs 6 & 7): Cam action clamps when properly selected and used provide a fast, efficient and simple way to hold work. Due to their construction and basic operating principles the use of cam action clamps is limited. Cam clamps apply pressure directly to the work and are not used when there are chances for strong vibration. The vibration will cause the clamp to get loosened. The clamps must be positioned to resist the natural tendencies of the clamp to shift or move the work when the clamp is engaged. To prevent this movement the clamp is always positioned so that work is pushed into the locators when pressure is applied.

Fig 6

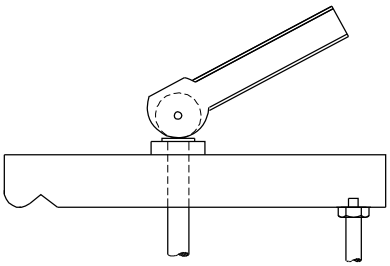

Fig 7

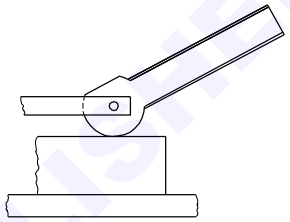

There are three basic types of cams used for clamping mechanisms, flat-eccentric, flat spiral and cylindrical.

Flat eccentric cams are easiest to make and can operate on either direction from their centre position. The basic eccentric cam locks when the cam reaches its high centre position. This limits the full lock range to a rather small area. Movement beyond this high centre position automatically loosens the clamp. (Fig 8)

Fig 8

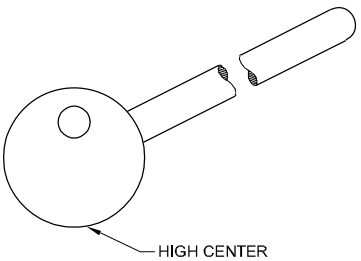

Flat spiral cams are the most common style of cam clamp used. Spiral cam clamps are preferred to eccentric cams because of their superior holding properties and wider locking range. (Fig 9)

Fig 9

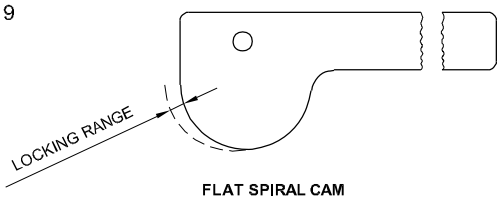

© NIMI NOT TO BE REPUBLISHED

Cylindrical cams : Cylindrical cams are also used in many applications. The cylindrical cams actuate the clamp by a hole or through a groove cut into the surface of the cylinder. (Fig 10).

Fig 10

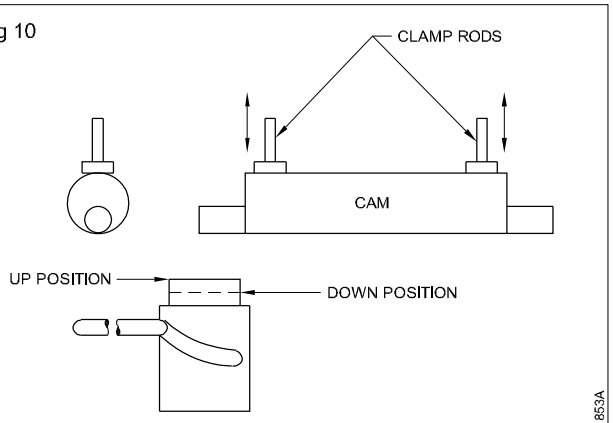

CYLINDRICAL CAMS

Wedge clamps : Wedge clamps apply the basic principle of the inclined plane to hold work. The two general forms of these clamps are the flat and conical wedges. Flat wedges or flat cams hold the part by using a binding action between the clamp and a solid portion of the tool body. Wedges having a slight angle from 1 to 4 degrees normally hold the work without additional attachment. This type of wedge is considered to be self holding. Large angle or self releasing wedges are used where more movement must be made.

Self releasing wedges will not hold by themselves. Another device such as cam or screw must be used to hold them in place. (Fig 11)

Fig 11

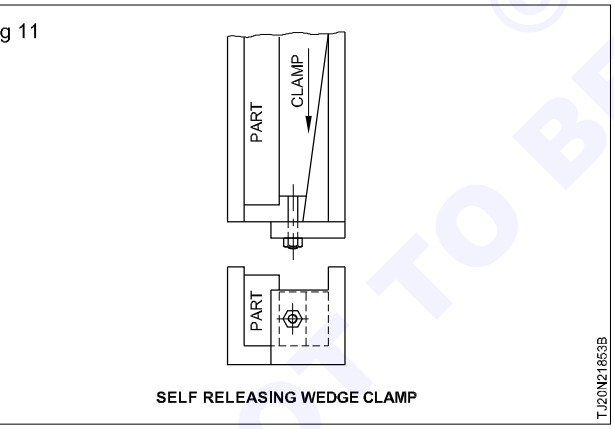

SELF RELEASING WEDGE CLAMP

Conical wedges or mandrels are used for holding work through a bore (Fig 12). Mandrels are available as solid and expansion types. Solid mandrels are limited in use to one specific size hole. The expansion mandrels are made to fit a range of sizes.

Fig 12

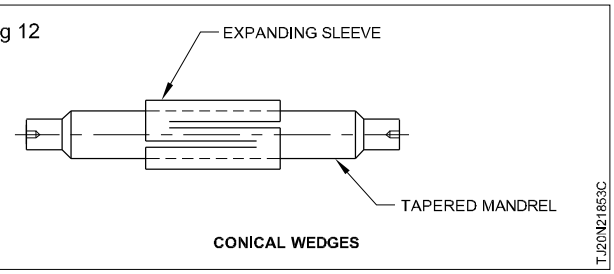

CONICAL WEDGES

Toggle action clamps (Fig 13)

Toggle action clamps are made with four basic clamping actions, hold down, squeeze pull and straight line. Toggle clamps are fast acting. Due to the way they are made toggle clamps have the natural ability to move completely free of the work, allowing for faster part changes. Another advantage of toggle clamps is their high ratio of holding force to application force.

Fig 13

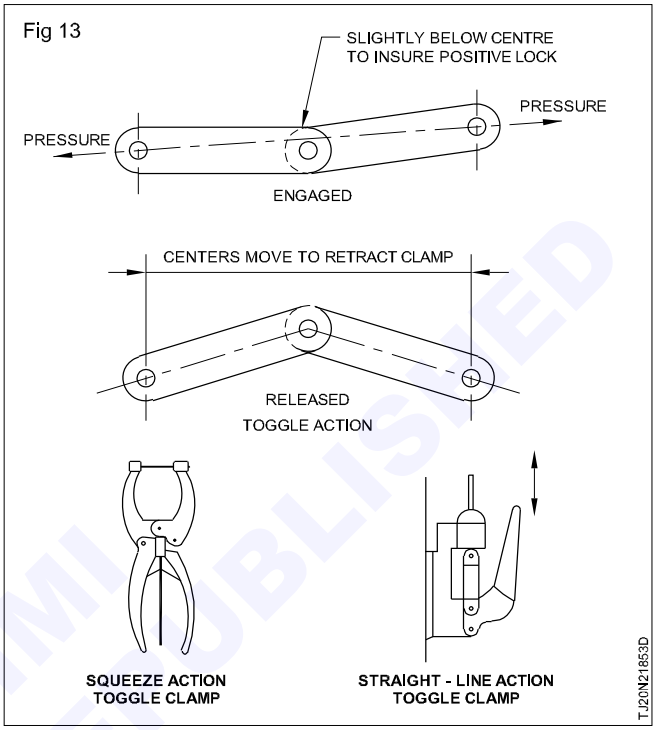

SQUEEZE ACTION TOGGLE CLAMP

STRAIGHT - LINE ACTION TOGGLE CLAMP

Power clamping : Power clamping systems normally operate under hydraulic power, pneumatic power or with an air to hydraulic booster. The advantage of using power clamps are better control of clamping pressures less wear on moving parts of the clamps and faster operating cycle. The main disadvantage is cost. (Fig 14).

Fig 14

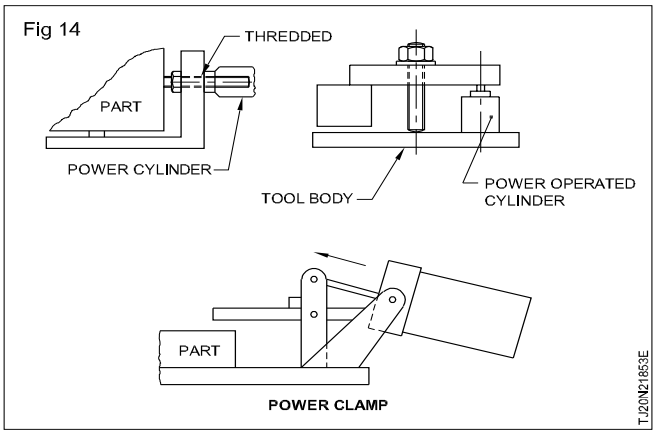

POWER CLAMP

Non-mechanical clamping : Non-mechanical clamps hold parts which cannot be held practically in other devices because of size, shape or the possibility of distortion. The main types of non-mechanical clamps used for production manufacturing are magnetic and vacuum chucks. (Fig 15 & 16)

© NIMI NOT TO BE REPUBLISHED

Fig 15

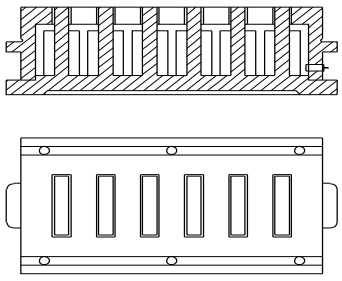

Magnetic chucks are restricted to use on magnetic ferrous metals. However with the mechanical devices almost any material can be held. (Fig 15)

Vacuum chucks are used to clamp parts which are non-magnetic or which must be clamped uniformly (Fig 16). Vacuum chucks equalise the clamping pressure over the entire clamping surface. Like magnetic chucks, vacuum chucks are suitable for almost every machining operations.

Fig 16

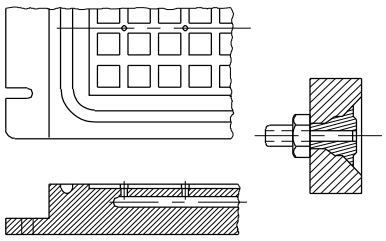

Material for clamps

Generally clamps are made from C45, 45 C8, 40cr1 of IS : 1570 and hardered to 48 to 52 HRC. Hardness maintained according to job to be clamped. it may be fully hardened or partly hardened at clamping wedge only.

Drill bushes

Objective: At the end of this lesson you shall be able to
- **state the different types of drill bushes and their uses.**

Drill bushes

They are used to locate and guide drills, reamers, taps and any other revolving tools commonly used to make or modify holes. (Fig 1).

Fig 1

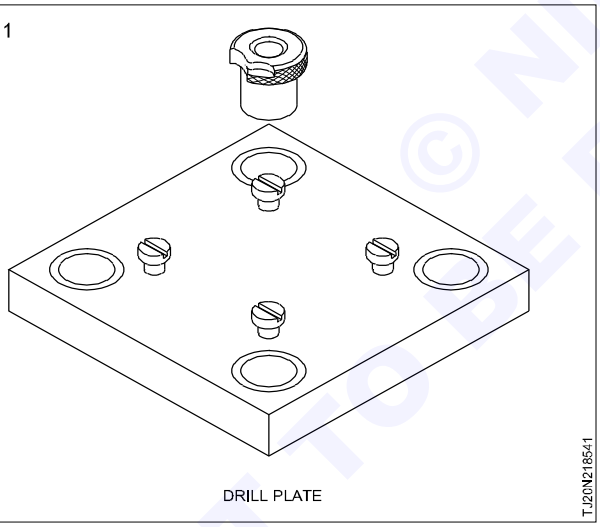

These are hardened and ground to exact sizes to ensure the needed repeatability in the jig. Standard size bushes are also available.

Types of drill bushes

- Press fit bushes
- Renewable bushes
- Liner bushes

Press fit bushes are made in two forms.

- Head
- Headless

These bushes are used where frequent change of bushes is not anticipated. (Fig 2 & 3).

Fig 2

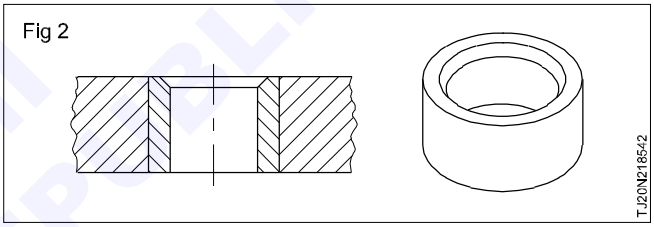

Fig 3

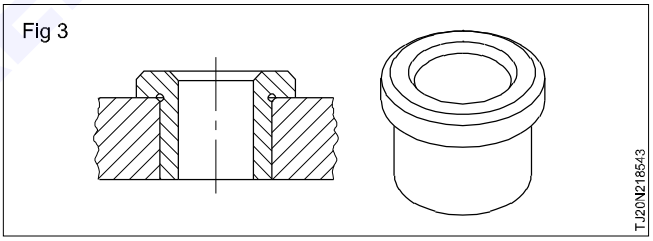

Renewable bushes are divided into two groups.

Slip renewable bushes (slip bushes)

These bushes are used when more than one operation is performed in the same location.(Eg:drilling and reaming) These bushes are used with press-fitted liner bushes and a lock clamp. (Fig 4)

Fig 4

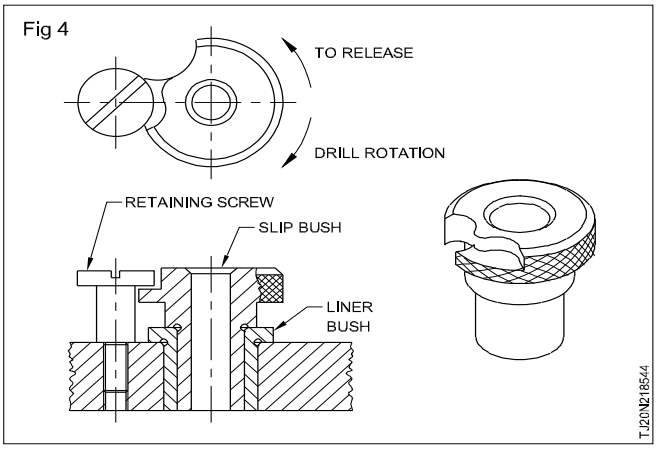

© NIMI NOT TO BE REPUBLISHED

Fixed renewable bushes

These bushes are used where only one operation is to be performed with each bush, whereas several bushes may be used during the life of the jig. These are also held in a liner and retained by a screw. (Fig 5)

Fig 5

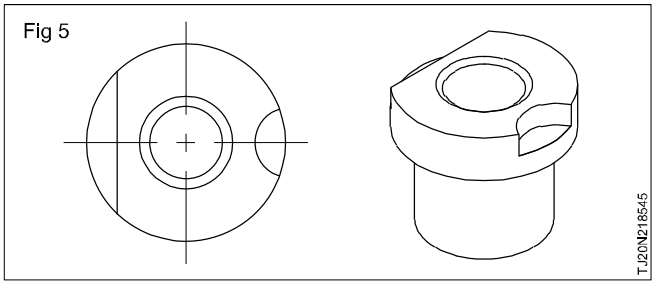

Liner bushes are used to provide a hardened hole where renewable bushes are located. Liner bushes are press-fitted to the jig plate.(Fig 6)

Fig 6

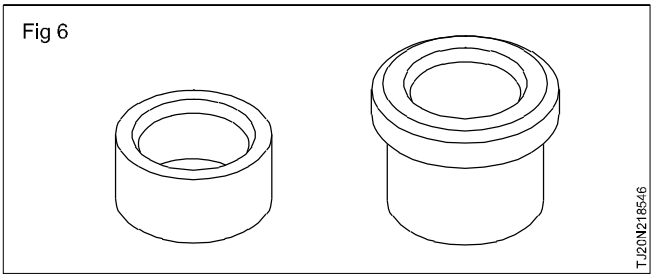

Designing jigs and fixtures

Objective: At the end of this lesson you shall be able to
- **what are use key factors should be followed while designing jigs and fixtures**
- **state common failure of jig and fixtures.**

When designing jigs and fixtures, various factors need to be considered to ensure they are effective and efficient in their intended manufacturing processes. Here are some of the key factors to keep in mind;

Understand the size, shape, material, and weight of the workpiece. This information will influence the design of the fixture and how it holds the workpiece securely.

Analyze the specific machining or assembly process involved, including the type of cutting tools or equipment to be used. Ensure the fixture can accommodate these requirements.

Determine the required precision and tolerances for the final product. Design the fixture to achieve the necessary accuracy in workpiece positioning.

Ensure that the fixture is rigid and stable to prevent vibrations and deflection during machining. This is crucial for maintaining dimensional accuracy.

Design the fixture to facilitate easy and quick loading and unloading of workpieces. This helps reduce setup time and improve efficiency.

Develop a secure clamping mechanism that hold these workpiece firmly without causing damage. Different workpiece shapes may require custom clamping solutions.

Incorporate safety feature to protect machine operators and prevent accidents. This may include safety shields, interlocks, or ergonomic considerations for operator comfort.

Consider designing modular fixtures that can be easily adpted for different workpieces or processes. This increases versatility and reduces the need for multiple fixtures.

Ensure that the fixture design allows for the efficient removal of chips and debris generated during machining to prevent interference with the process.

Whenever possible, use standard components and parts to simplify maintenance and replacement.

Ensure that the fixture can adapt to changes in part design or production requirements without the need for significant modifications or new fixtures.

Strive to reduce lead times by designing fixture that allow for quick setup and changeovers between different work pieces or processes.

Fixture and machine relations

Objective: At the end of this lesson you shall be able to
- **explain the fixture and machine relation in machining proecss**
- **state cutting tool relation with jig and fixture.**

Fixture and machine relations

Match machine tool specifications.

Securely hold parts and tooling

Ensure precision and minimal tolerance deviations

Use durable materials

Allow for flexibility and adaptations

Prioritize operator safety and ergonomics

Enhance production efficiency

Optimize costs over the fixtures lifespan

Facilitate quality control integration

Embrace sustainability principles

© NIMI NOT TO BE REPUBLISHED

The relationship between fixture and machines is integral to various manufacturing processes, ensuring efficient, precise, and sustainable production across industries.

Jigs and fixture in relation to cutting tools

The relationship between the cutting tool and the fixture is essential for maintaining the workpiece's position and orientation throughout the machining process.

Cutting tools, jigs, and fixtures are interrelated components in manufacturing and machining processes, each playing a specific role in ensuring precision and efficiency. Here's how cutting tools are related to jigs and fixtures.

Cutting tools are responsible for removing material from the workpiece during machining operations, such as drilling, milling or turning.Jigs and fixtures are essential for aligning and controlling the movement of cutting tools relative to the workpiece.Cutting tools are mounted on spindles or tool holders and interact with the workpiece under the guidance and control of jigs and fixtures.

The accurate alignment and control provided by jigs and fixture ensure that cutting tools operate precisely according to the intended design specifications.

This alignment helps achieve dimensional accuracy in the machined components.

Jigs and fixtures, by consistently holding workpieces in the same position, enable the cutting tools to produce repeatable results.

Jigs and fixtures not only position workpieces but also contributes to their stability during machining. This stability ensures safe and efficient operation of cutting toools, reducing the risk of accidents and workpiece damage.

The combination of cutting tools with well-designed jigs and fixtures optimizes the maching process.

Jigs and fixtures can be designed to accommodate various cutting tools and workpieces geometries, making them versatile tools in manufacturing

Cutting forces on jigs and fixtures

Objective: At the end of this lesson you shall be able to
- **explain cutting forces generated while using jigs and fixtures**
- **obtain the knowledge of elements of jig fixtures.**

Analyzing machining forces

The most-important factors to consider in fixture layout are the direction and magnitude of machining forces exerted during the operation. In (Fig 1) , the milling forces generated on a workpiece when properly clamped in a vice tend to push the workpiece down and toward the solid jaw. The clamping action of the movable jaw holds the workpiece against the solid jaw and maintains the position of the part during the cut.

Fig1 Cutting forces in a milling operation should be directed into the solid jaw and base of the vice

Fig 1

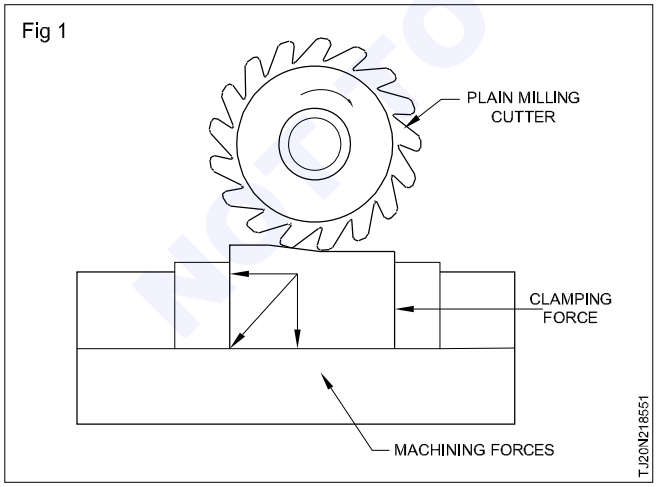

Another example of cutting forces on a workpiece can be seen in the drilling operation in (Fig 2). The Primary machining forces tend to push the workpiece down onto the workholder supports. An additional machining force acting radially around the drill axis also forces the workpiece into the locators. The clamps that hold the workpiece are intended only to hold the workpiece against the locators and to maintain its position during the machining cycle. The only real force exerted on the clamps occurs when the drill breaks through the opposite side of the workpiece, the climbing action of the part on the drill. The maching forces acting a correctly designed work holder actually help hold the workpiece.

The primary cutting forces in a drilling operation are directed both downward and radially about the axis of the drill. (Fig 2)

Fig 2

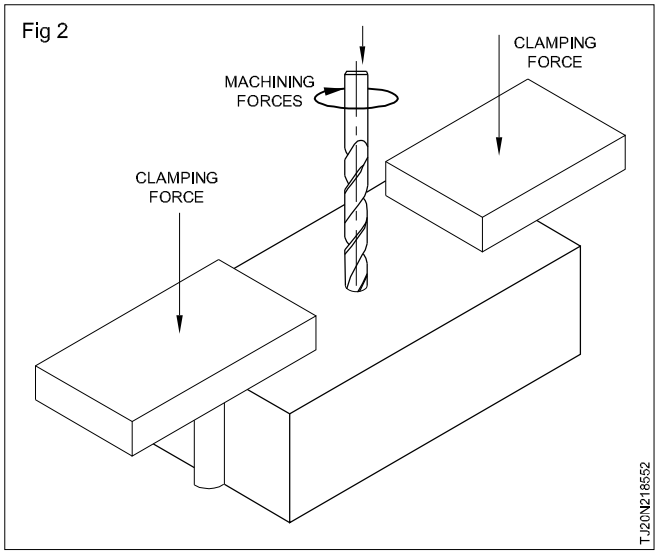

© NIMI NOT TO BE REPUBLISHED

Planes of movement

Objectives: At the end of this lesson you shall be able to
- **describe the twelve possible direction of movement**
- **state how to restrict the possible movements.**

Planes of movement: An unrestricted object is free to move in any of twelve possible directions. Figure 1 shows an object with three axes or planes, along which movement may occur. An object is free to revolve around or move parallel to any axis in either direction. To visualize this the planes have been marked “X-X”, “Y-Y” and “Z-Z”. The direction of movement are numberd from one (1) to twelve (12).

Fig 1

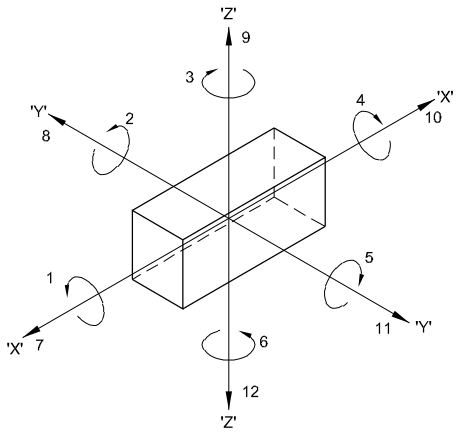

T.J20N218561

Restricting movements: In order to accurately locate a part in a jig or fixture movements must be restricted. This is done with locators and clamps.

The fixture for the part in figure 2 illustrates this principle of restricting movement.

Fig 2

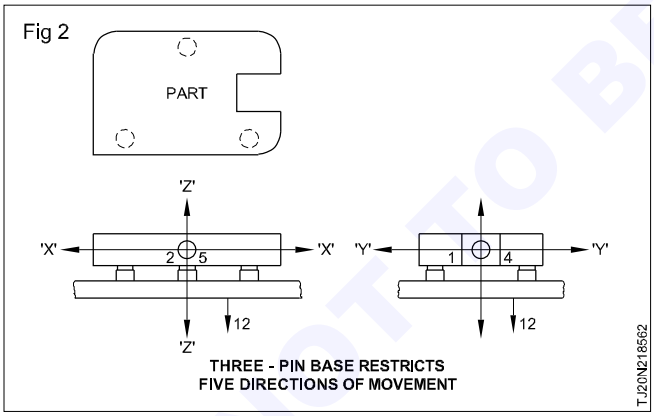

T.J20N218562

By placing the part on a three pin base, five directions of movement (2,5,1,4 and 12) are restricted. (Fig 3)

Fig 3

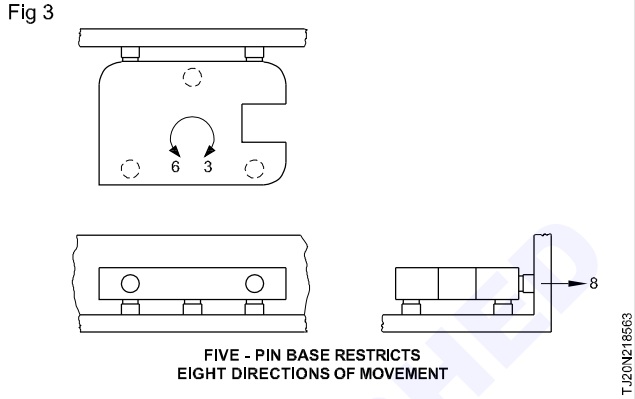

T.J20N218563

To restrict the movement of the part around the “Z-Z” axis and in direction 8, two more pin type locators are positioned Fig 3. To restrict movement in direction 7, a single pin locator is used. The remaining directions 9, 10, 11 are restricted by using a clamping device. (Fig 4)

Fig 4

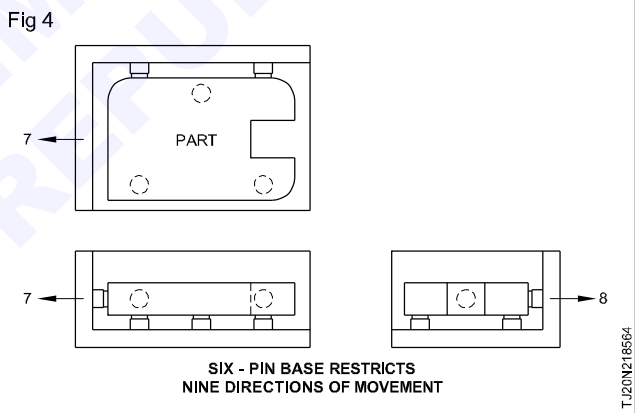

T.J20N218564

Work piece support: Support should be raised above surrounding surfaces, so that chips can be removed easily.

Method of restricting the possible movement of workpiece in jigs and fixture

Objective: At the end of this lesson you shall be able to
- **explain to restrict the movement of workpiece.**

Locating pins or locates are used:

- to restrict the movement of the component
- to position the piece part with respect to the tool
- to facilitate easy loading and unloading of components.
- to assist the operator for correct loading (fool proofing).

© NIMI NOT TO BE REPUBLISHED

Different types of locating pins are used according to the shape of the component and also according to the hole locations. A few types of locating pins are shown in Figs 1 to 6.

Fig 1

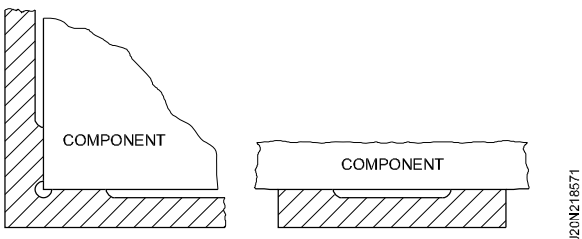

Fig 2

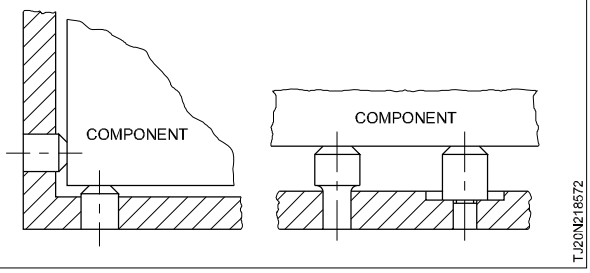

Fig 3

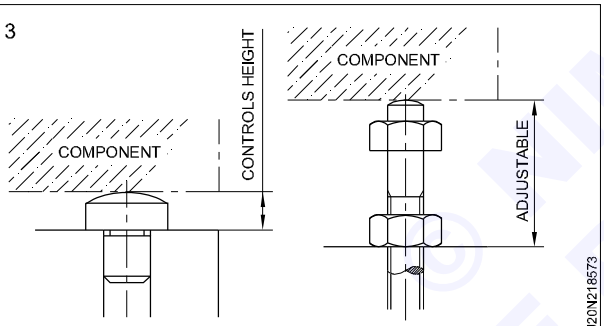

Fig 4

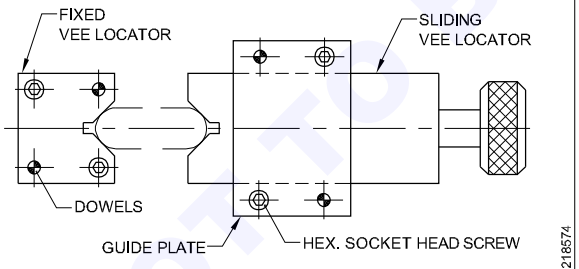

Fig 5

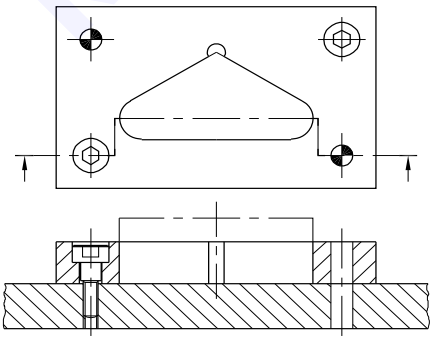

Fig 6

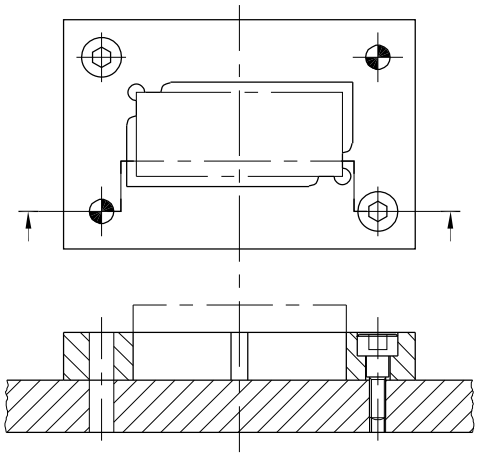

3-2-1 pin method

Two main intentions when placing a job on a jig/fixture are:

- Precisely positioning the part at the desired coordinates.
- Curbing all six degrees of movement so that the part cannot hudge.

An extensively used method for obtaining these objectives is the 3-2-1 principle or six degrees of freedom for part location (Fig 7)

Fig 7

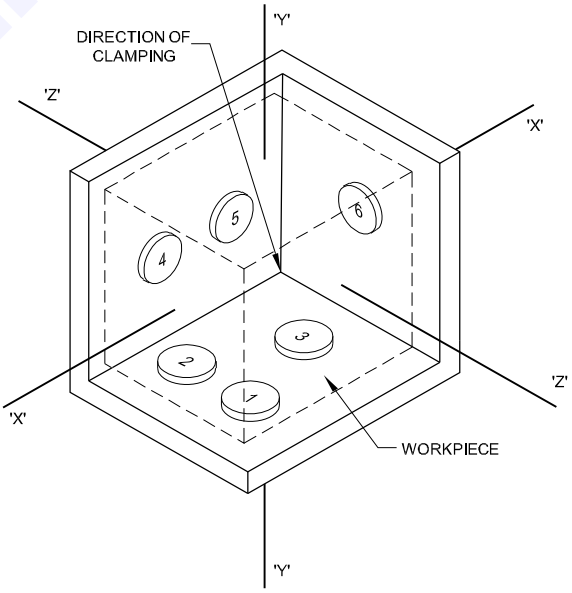

Design fixtures with accessible components for maintenance and repairs, reducing downtime.

The considerations apply to the design phase of jigs and fixture in manufacturing and machining processes.

Failure of jigs and fixtures:

Jigs and fixtures undergo wear and tear due to repetitive use. Components like guide pins, busshings, and clamps can wear out, reducing accuracy and stability.

© NIMI NOT TO BE REPUBLISHED

Jigs and fixture rely on precise positioning of workpieces. Damage or misallignment of positioning components, such as locating pins or stops, can lead to inaccurate machining or assembly, resulting in product defects.

Fixtures must firmly hold workpieces during machining or assembly. If clamps or clamping machanisms fail to exert enough force, workpieces may move or vibrate causing dimensional inaccuracies or catastrophic failures.

Excessive force or load on a jig or fixture can cause deformation or breakage. This can happen when machining heavy or irregularly shaped workpieces that exceed the fixture's design limits.

Poorly designed jigs or fixtures can lead to issues like weak attachment point, inadequate support, or insufficient rigidity. These design flaws can result in premature failure.

Using incorrect materials for jigs and fixture can lead to corrosion, fatigue, or reduced durability. Proper material selection, considering factors like strength, hardness, and environmental conditions, is vital for preventing material -related failures.

Neglecting routine maintenance can gradually deteriorate jigs and fixtures. Regular cleaning, lubrication, and inspections are necessary to identify and address potential issues before they escalate into failures.

Human error can contribute to jig and fixture failures, Improper setup, adjustment, or operation by inexpreienced or untrained personnel can result in workpiece misalignment, fixture damage or accidents.

© NIMI
NOT TO BE REPUBLISHED

Types of press tools/operation

Objectives: At the end of this lesson you shall be able to
- **state various press working operations**
- **identify different press tools**
- **identify different press worked components**
- **state the effects of shear theory on press tools.**

Blanking: Blanking is a process of producing flat components. The entire periphery is cut. The cutout piece is called blank or stamping. The tool used is called blanking tool (Fig 1)

Fig 1

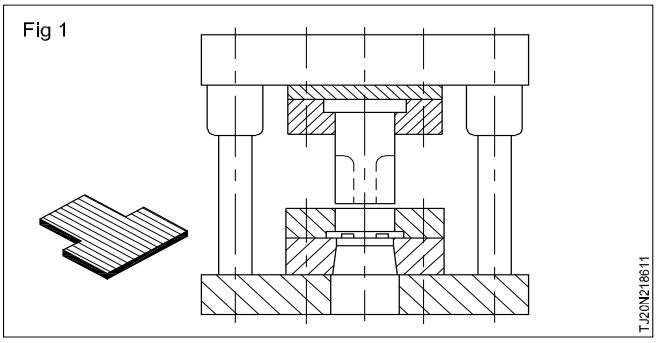

Piercing: Piercing is a process of making holes in the stamping. The entire periphery is cut and the cut - out piece (slug) is waste. The tool used is called piercing tool. (Fig 2)

Fig 2

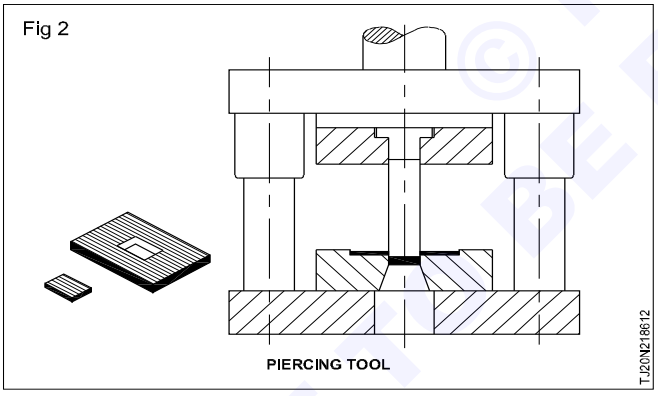

Cutting off: A cut off operation separates the work material along a straight line in a single cut line. No scrap is produced in the cutting off operation. The process of cutting off is similar to shearing in a shearing machine. (Fig 3)

Fig 3

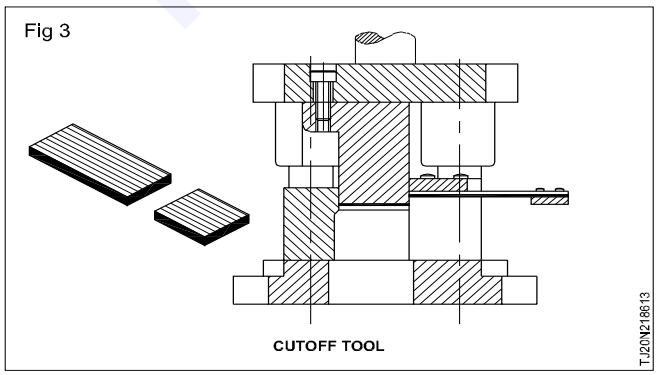

Parting off: The parting off operation separates the work material along a straight line in a double line cut. The piece removed by the punch is scrap. (Fig 4)

Fig 4

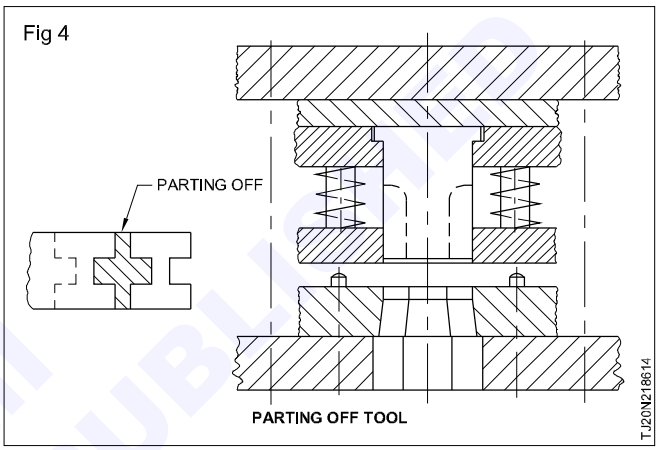

Perforating: The process of piercing series of holes in a given blank or workpiece is known as perforating. (Fig 5)

Fig 5

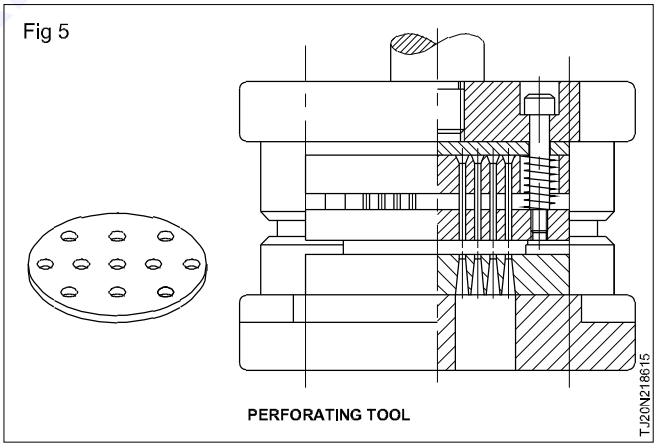

Progressive tool: Progressive tools perform two or more operations at different stages every time the press is operated. The stock strip is advanced through a series of stations that performs one or more distinct press working operations. The strip must move from the first to each succeeding station to produce a complete workpiece. (Fig 6)

Compound tool: If two or more cutting operations are performed in the tool at the same stage and carried out in the single stroke of the press, it is called a compound tool.(Fig 7)

Trimming: Trimming is an operation of removing the excess metal which remains after a deep drawing

© NIMI NOT TO BE REPUBLISHED

Fig 6

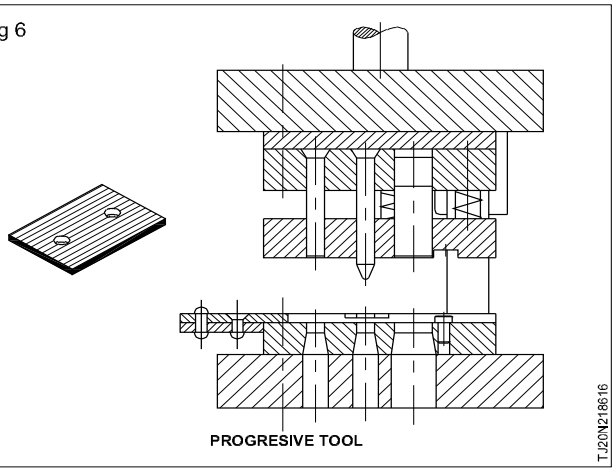

Fig 7

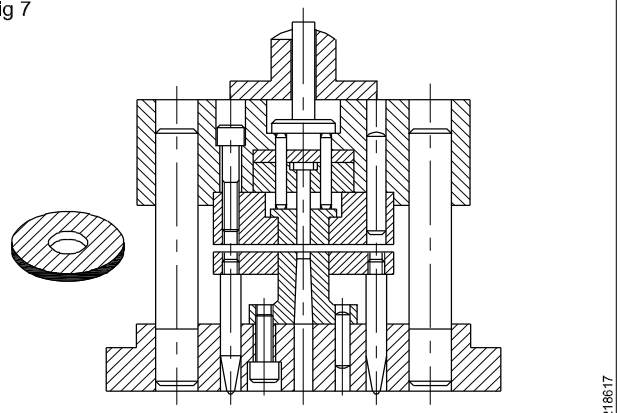

operation. It imparts a certain shape to the side of the strip or a component. (Fig 8)

Fig 8

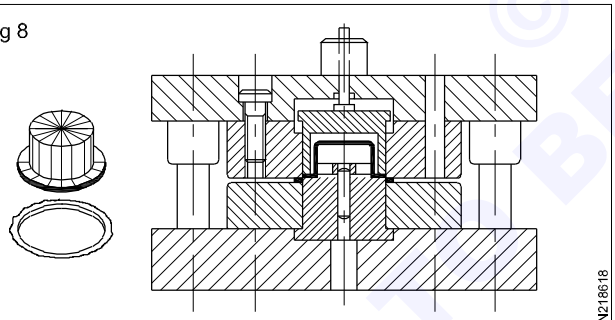

Notching: This operation removes a small amount of material from the edges of the strip or a blank. (Fig 9)

Fig 9

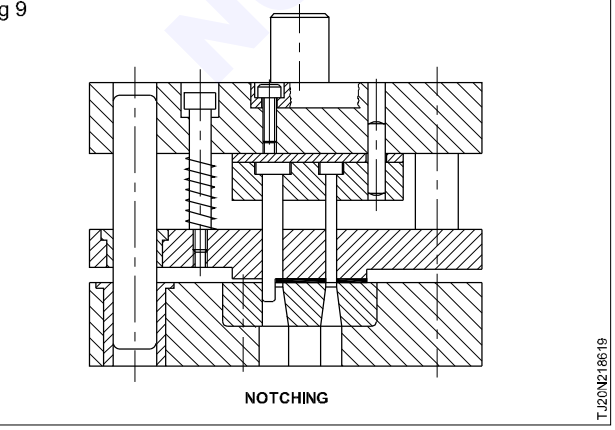

Shaving: Shaving is a finishing operation. A very small amount of material is removed around the edge of the blank or pierced hole. Its objective is to obtain a straight smooth side wall.

The excess metal is removed as a chip similar to the action of a metal cutting tool. (Fig 10)

Fig 10

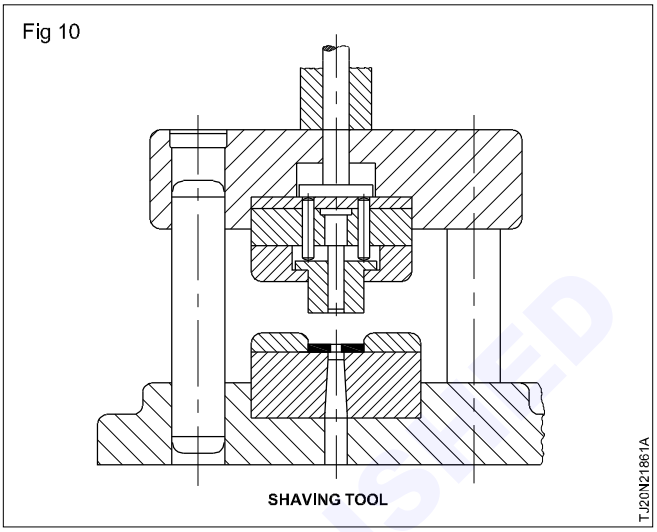

Lancing: This is a continuous bending and cutting operation along a line in the work material. No metal is cut free during the lancing operation. (Fig 11)

Fig 11

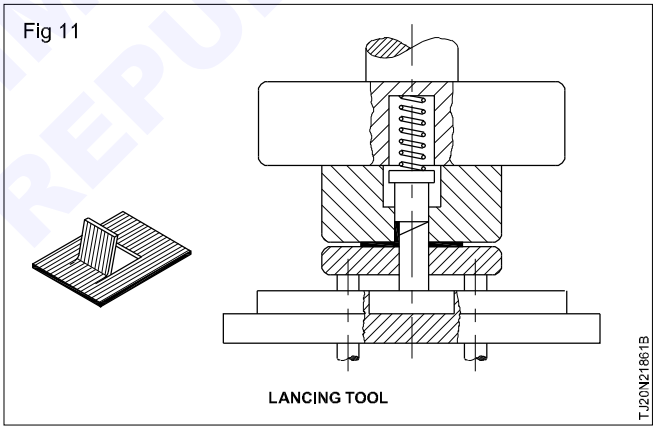

Dinking: To cut paper, leather, cloth rubber and other soft materials a dinking tool is used. The cutting edges penetrate the material and cut it. (like knives). The dinking punch digs into the base plate. The base plate is made of wood, fibre or hard rubber.

Fig 12

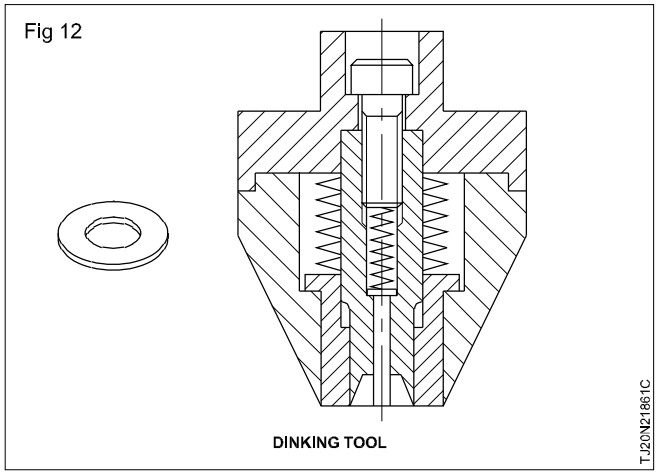

© NIMI NOT TO BE REPUBLISHED

The dinking tool can be used to cut inner and outer shapes of components. (Fig 12)

Broaching: Broaching may be considered as a series of shearing operations performed one after the other by the same tool. A broach is provided with a number of teeth each of which cuts a chip as the broach traverses the surface to be finished. Broaching is preferred when the blanks are too thick for shaving and when considerable metal must be removed. (Fig 13)

Fig 13

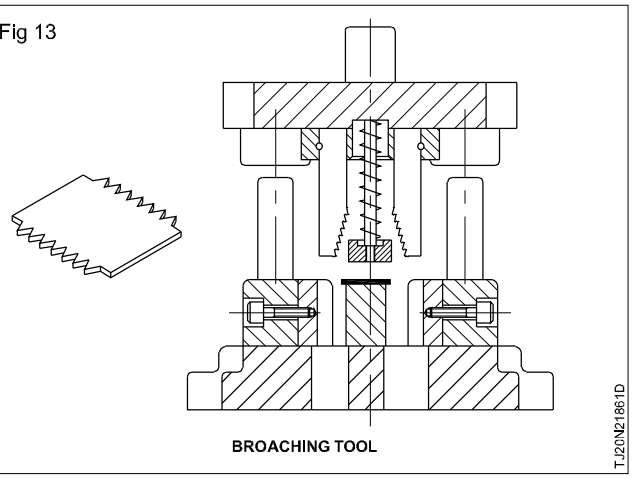

Planishing: Planishing tool is used to straighten blanked components. Very fine serration points penetrate all over the surface of the component in order to release stress and straighten the component. (Fig 14)

Fig 14

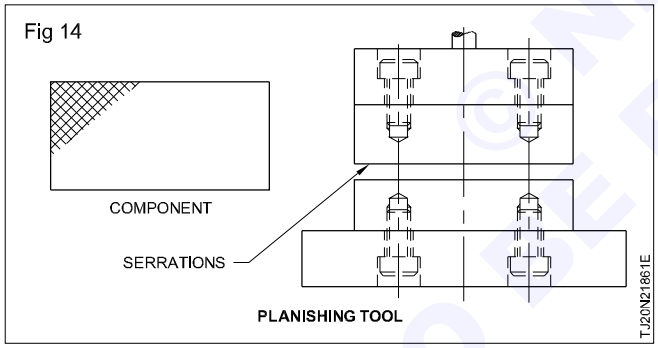

Embossing: The embossing tool is used to press letters and numbers into a sheet metal or pressed piece part. Usually the punch will have the raised form and the die will have the corresponding cavity. (Fig 15)

Fig 15

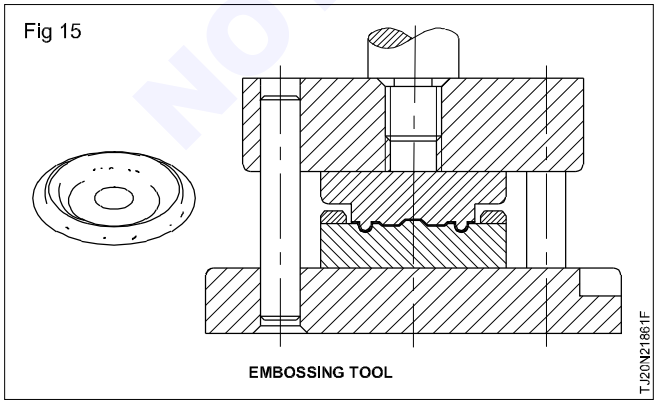

Coining: Coining is the process of pressing cold material in a tool so that it flows into the engraved profiles on the die face. (Fig 16)

Fig 16

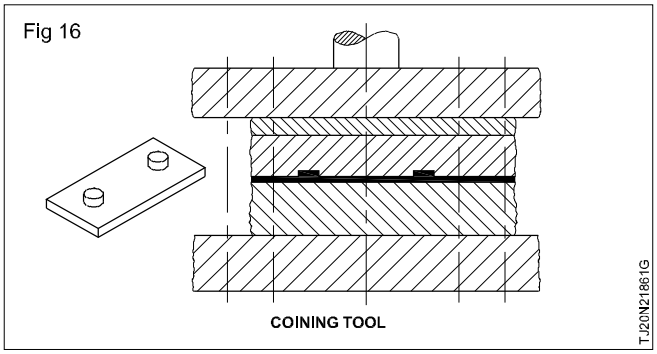

Extrusion: This is a special process to manufacture collapsible tubes, shells etc. The blank is loaded in the die and Pressed upward or downward under high pressure between the punch and the die. (Fig 17)

Fig 17

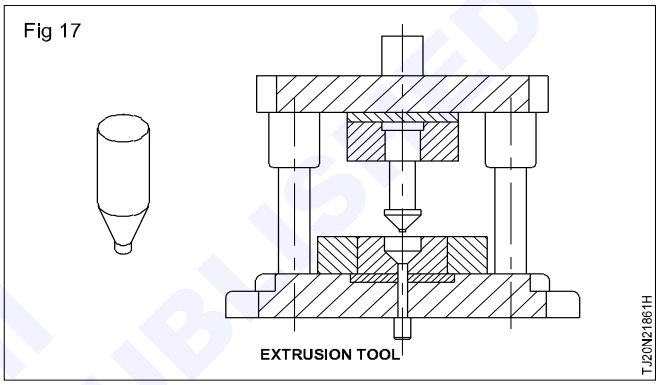

Bending: Bending is shaping the material around a straight axis which extends completely across the material. Metal flow is uniform along the bend axis. (Fig 18)

Fig 18

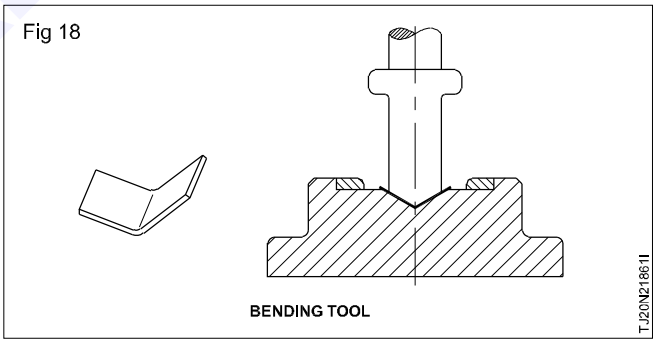

Forming: Forming is similar to bending except that the line of bend is along a curved axis instead of a straight one. Metal flow is not uniform. It will be localised depending upon the shape of the workpiece. (Fig 19)

Fig 19

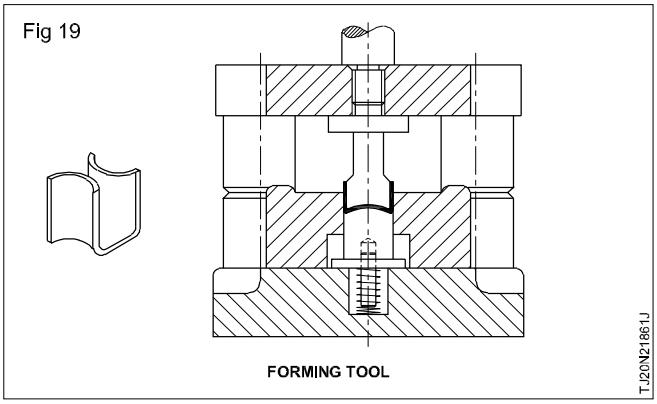

NOT TO BE REPUBLISHED © NIMI

Drawing: In drawing, a flat blank is transformed into a cup or shell. The parent metal is subjected to severe plastic deformation. (Fig 20)

Fig 20

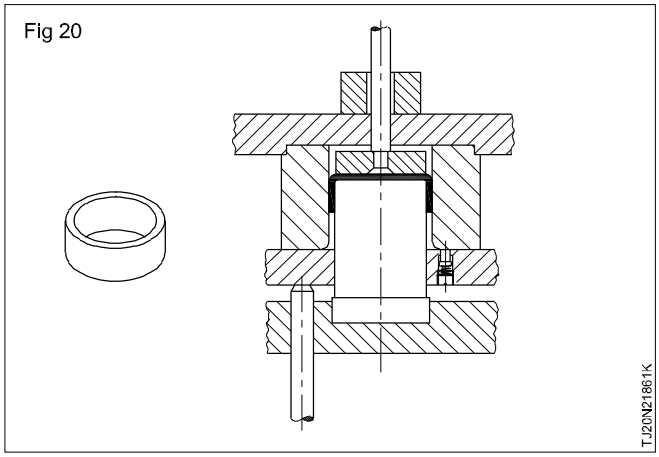

Curling: Curling is an operation of rolling the edges of sheet metal into a curl or roll. The purpose is to strengthen and provide a protective edge. It also improves the appearance of the part. (Fig 21)

Fig 21

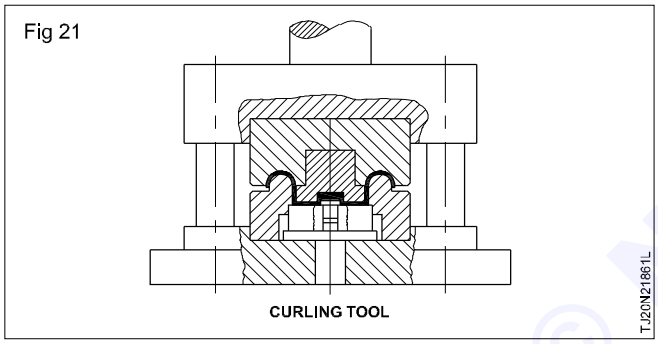

Combination tool: In a combination tool two or more operations such as forming, drawing, extruding, embossing etc may be combined with each other or with various cutting operations such as blanking, piercing, broaching and cutting off. (Fig 22)

Fig 22

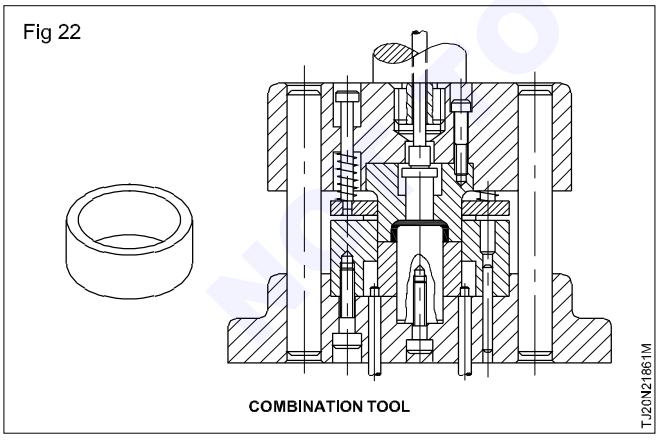

Sub - press tool blank and form very small parts. The die components are retained in a sub - press. The sub - press is a small press operated in a larger one. (Fig 23)

Fig 23

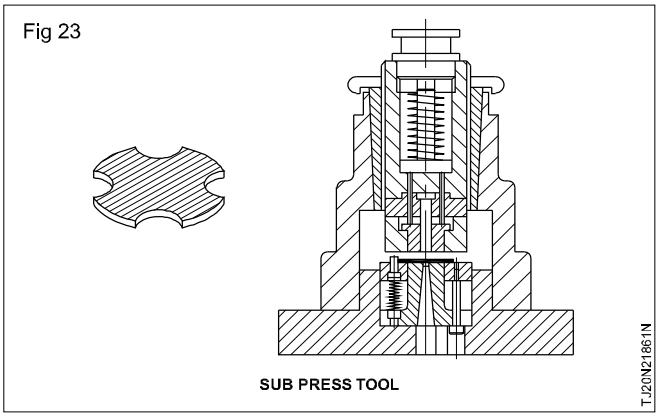

Assembly tool: Assembly tool is used to assemble two or more parts together by press fittings, riveting or other means. Components are assembled in very short time and the relationship between parts can be maintained closely. (Fig 24)

Fig 24

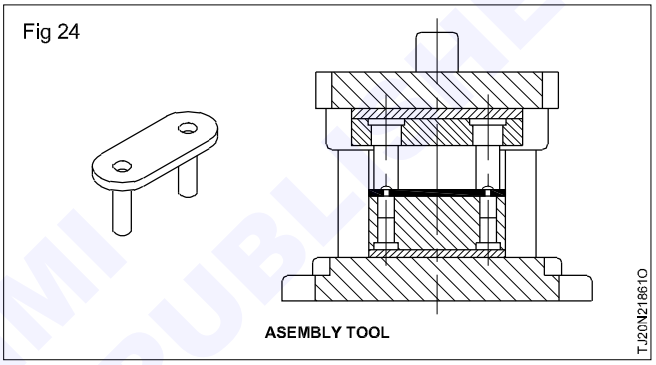

Bulging: Bulging is an internal forming operation used to expand portions of a drawn shell or tube. The forming force is applied from inside the workpiece and is transmitted through a medium that will flow but will not get compressed. The more common media are rubber, polyurethane, oil or water. (Fig 25)

Fig 25

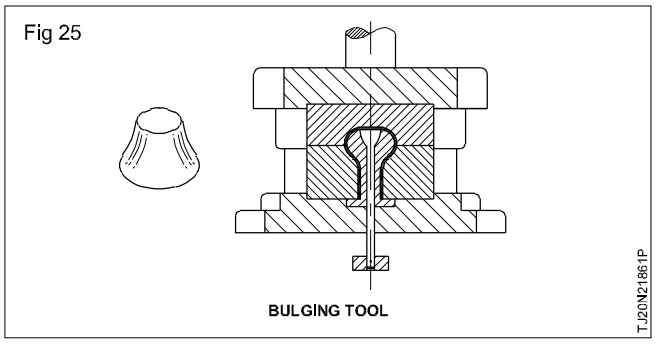

Swaging: Swaging or necking is opposite to bulging. When a workpiece is swaged a portion is reduced in size and this causes the part to become longer than it was before swaging. (Fig 26)

Flaring or lugging: Forming an outward flange on parts is called flaring. (Fig 27)

Side cam tool: This is used to pierce holes on the sides of drawn, formed components. Side cam transforms the vertical motion of the press to horizontal or angular motion in the tool. (Fig 28)

© NIMI NOT TO BE REPUBLISHED

Fig 26

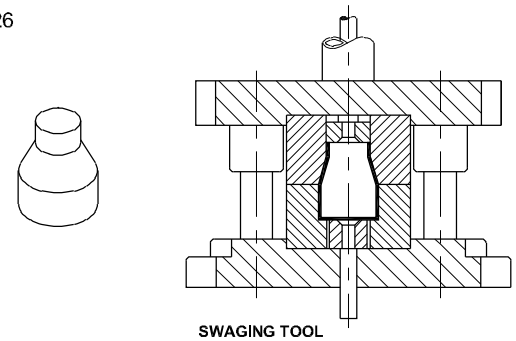

SWAGING TOOL

T-J20N21861Q

Fig 27

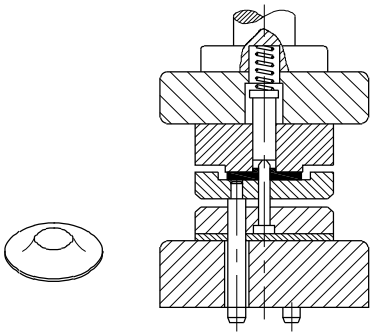

FLARING OR LUGGING TOOL

T-J20N21861R

Fig 28

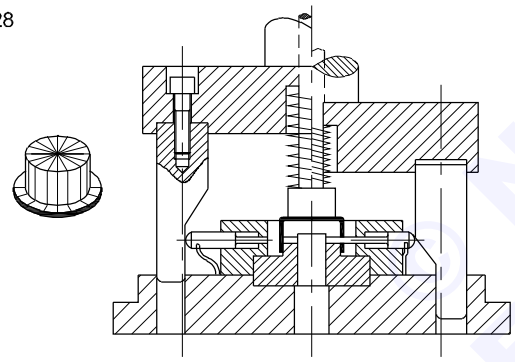

SIDE CAM TOOL

T-J20N21861S

Guide plate tool (Fig 29)

The guide plate tools are preferred when,

- the shape of the component is simple.
- the accuracy of the component is less.
- only a few number of components are required.

Fig 29

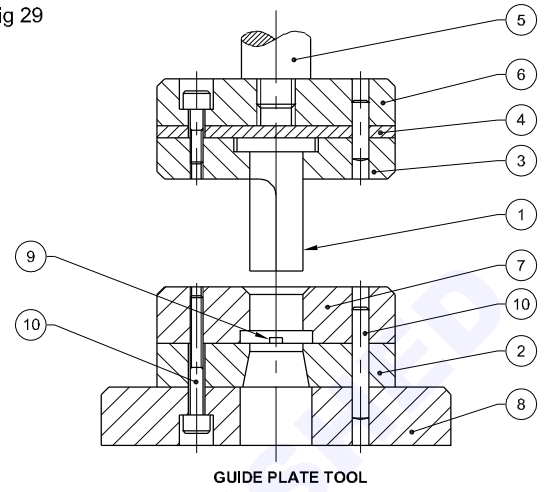

GUIDE PLATE TOOL

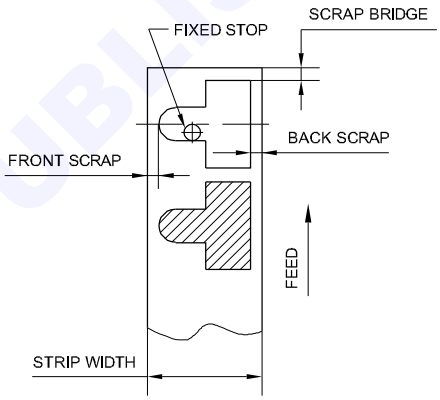

T-J20N21861T

Shear theory

Objective: At the end of this lesson you shall be able to
- **explain theory of shearing**

In press tools, a shear force is applied to the material being cut. This force acts parallel to the surface of the material, causing it to deform along the plane of the cut.

Shear stress is the forces per unit area acting parallel to the surface of the material in cutting operations, shear stress is concentrated along the cutting edge of the tool.

As the press tool applies shear force to the material, a shear zone is formed. In cutting operations, the shear tone is typically incated close to the cutting edge of the tool.

During the cutting process, the material undergoes plastic deformation within the shear zone. This means that the material doen't spring back to its original shape when the shear force is removed.

In some cases, especially when cutting hard or brittle material, the shear force can exceed the material's strength, leading to shear failure.

The design of the cutting tool is critical in controlling shear forces and ensuring efficient cutting. Factors like the tool's material, geometry, and edge sharpness all influence the magnitude and distribution of shear forces.

The material being cut plays a significant role in shear theory. Materials with different properties, such as hardness and ductility, will respond differently to shear forces.

Cutting speed and temperature can affect shear forces and material behaviour. High cutting speeds can increase shear forces, while elevated temperatures

© NIMI NOT TO BE REPUBLISHED

resulting from friction can influence material properties and affect shear behaviour.

Fig 1

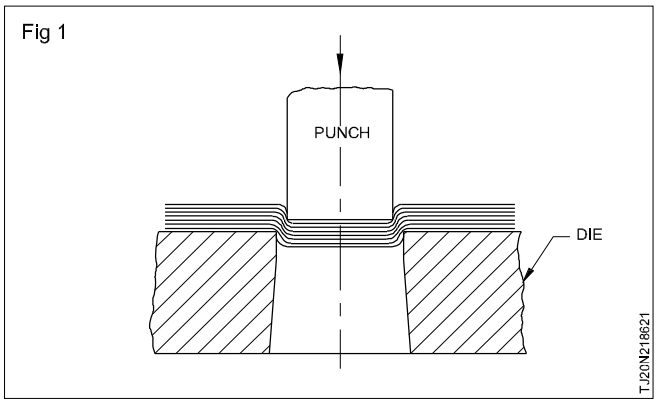

Fig 2

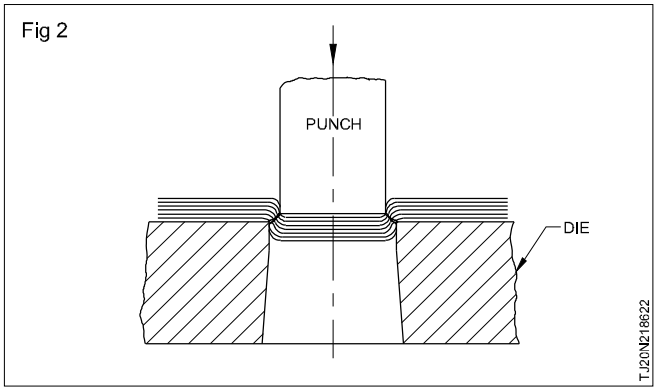

© NIMI
NOT TO BE REPUBLISHED

Safety precautions - Safe Handling of Tools / Equipments

Objectives: At the end of this lesson you shall be able to
- **list the safety precaution to be observed while handling tools**
- **brief the safety precautions to be observed while handling equipments**
- **state the safety point while working on CNC machines.**

Precaution for handling of tools

- Keep hands and body clear of cutting and clamping areas while setting the job
- Do not operate the machine without safety devices, by passing interlock, doors and guard reremoved
- Make sure that turnet tooling is securely clamped before operation
- Ensure work piece and related fixtures are properly food before running the spindle.
- While using tailstock be sure that it is clamped before operation
- Close all cover and doom while machine is running
- Stand clear of all rotating and moving parts.
- Safety glasses to be worn at all time
- Do not place tools on moving parts
- Switch off power running maintenance/repair work
- Do not use excessive force when clamping the job
- Do not hand the machine unnessarily
- Do not remove chips with bare hands
- Do not use tools from other machine

General safety on CNC machine

- Always be ALERT while machining on CNC machine.
- Know / Familiarize yourself with the machine before attempting to set (or) operate.
- First know all the emergency switches location before proceeding with operation.
- Do not press any switch / button / key unless you know fully well about the function of the same.
- Do not poke your head inside the machine when the auxiliary is on or in auto mode for any inspection / setting.
- Main switch should be off during cleaning the machine.
- Do not use compressed air for cleaning.
- Do not remove / adjust any sefety / limit / proximity switches.
- Do not use nonstandard tools/holder.

Safety check on the machine - before start

- Check the voltage and current.
- Check the lubricant tank oil level.
- Check the hydraulic tank oil level.
- Check the clamping devices.
- Check the cleanliness of the machines.
- Check the clamping stock.

Safety check on the machine

- Check the main pressure of the hydraulic/pneumatic system.
- Check the clamping pressure of the hydraulic system for chuck / fixture.
- Check the chuck function.
- Lubricate the clamping device if any manual.
- Move the slides to Ref. points in return mode.
- Jog the slides to and fro and check the sliding movement.
- Check the centralized lubricant system by manually of pressing the Switches
- Check the coolant supply by pressing app. switches
- Check the selectable zero offset entries.
- Check the tool offset entries.
- Check the program and the app. Zero and tool offset.
- Check the Feed overide position.
- Check the speed overide position.
- Check for the alarm if any and set it right.
- Check the tool fits.
- Check the tools positon with reference to program.
- Check the tool indexing / tool care

Safety while machining

- Check the program control levels.
- (Single block, Dry run, skip optional stop etc.)
- Be careful Dry run should not be activated unless it is warranted.
- While in auto if - speed, feed is missing in put manually.

© NIMI NOT TO BE REPUBLISHED

- If coolant is not activated through program, manually activated the coolant switches.
- Try to cut the job in single block when your are first time proving the program.
- Open the door at the end of machining preferably in Jog mode.
- Clean with brush, the tools and the job. Avoid compressed air for cleaning.

Safety - related to programming

- **Coordinate system setting**

  Incorrect coordinate system setting may damage the machine tool, workpiece etc, establish the coordinate system correctly in the program with reference to the machine setting.

- **Position by non linear interpolation**

  When performing positioning by non linear, Interpolation between the start and end points. The tool path should be carefully confirmed before performing the program.

- **Function involving 4th axis**

  When programming the 4th axis pay careful alternation to the speed of the rotation axis . Incorrect programming of the rotational axis may cause the check to loose the grip and caused damage the machine tool, tool etc.

- **Inch/ metric conversion**

  Switching between inch and metric inputs does not convert the measurement units of data such as the workpiece origin, offset, current position etc. Hence before starting the machining determine which measurement units are being used and check the values accordingly.

- **Stroke check**

  Perform the manual reference position return as required. Stroke check is not possible before manual reference position return. When the stroke check is disabled alarm is not issued even if the stroke limit is exceeded.

- **Tool offset check**

  If the called tool is not considering the tool offset value -may cause heavy damage to the tool- hence check in the program the tool offset, CRC values etc.

- **Plane selection**

  The machine behaves unexpectedly in wrong movement if the plane selection is wrongly selected in the program

- **Programmable mirror image**

  Note that programmed operation vary considerably when a programmable image is established.

- **Compensation function**

  Compensation is cancelled during reference position return command (or) a command based on the machine coordinate system. Before issuing such commands always cancel compensation function mode.

  Every time when the workpiece zero is set kindly avoid programming with G10 use the G 10 command when standard fixture is used for machining.

Safety - while replacing the memory backup battery

When the battery alarm is on the CRT, only maintenance people who know this work may be allowed.

Follow the given instructions

- First power on the CNC.
- Apply the emergency on.
- Do not touch any high Voltage part of this mark.
- Replace only the recommended type batteries after checking the voltage & current.
- Secure the batteries correctly otherwise loss of data may end with a heavy loss when the alarm is displayed on the CRT within a week's time.

Note

- **Change the battery within a week's time, which will prevent the contents of the memory,in programs, offsets, and parameters.**
- **Refer the maintenance manual for further details.**

NOT TO BE REPUBLISHED

Machine Specification

Objectives: At the end of this lesson you shall be able to
- **Describe machine specification**
- **Describe machine control specification**

Specification: A specification often refers to a set of documented requirements to be satisfied by a material, design, product, or service. A specification is often a type of technical standard.

There are different types of technical or engineering specifications (specs), and the term is used differently in different technical contexts. They often refer to particular documents, and/or particular information within them. The word specification is broadly defined as to state explicitly or in detail" or "to be specific".

The purpose of a specification is to provide a description and statement of the requirements of a product, components of a product, the capability or performace of a product, and/or the service or work to be performed to create a product.

Example of CNC lathe specification as shown in Table 1.

Table 1

SPECIFICATIONS OF CNC LATHE

1	No. of controlled axis	2
2	Interpolation	Linear/circular/parabolic
3	Maximum swing over bed	320 mm
4	Maximum machining length	245 mm
5	Collet	ID = 56 mm OD = 48 mm
6	Spindle taper hole	∅52 mm
7	Maximum bar dia	∅38 mm
8	Spindle head type	A2 - 5
9	Spindle speed range	60 to 5000 R.P.M
10	Main motor	3.70 KW
11	Chuck size	∅200 mm
12	Chuck type	Hydraulic, solid
13	Rapid transfer speed on x axis	18 metre/min
14	Rapid transfer speed on z axis	18 metre/min
15	X axis travel	200 mm
16	Z axis travel	320 mm
17	Guideway type	Linear guideway
18	Turret type	Gang type
19	Turret tool	Boring bar size 20/20 mm ∅20 mm
20	Weight	1700 Kg
21	Dimensions	1600x1250x1650 mm

© NIMI NOT TO BE REPUBLISHED

Table 2

Example of control specification is listed in Table - 2

CNC Control (Fanuc 18iTB)

Standard Specifications

- Max. controlled axes (NT, 2 axes / VTC, 3 axes)
- Simultaneously controlled axes (2 axes)
- Least input increment 0.001 mm:0.0001”
- Inch/Metric conversion
- Mirror image
- Chamfering on/off
- Blacklash compensation
- Pitch error compensation
- MDI operation
- Program number search
- Sequence number search
- Dry run
- Single block
- JOG feed
- Incremental feed (x1, x10, x100, x1000)
- Jog and handle simultaneous mode
- Manual handle feed (1 unit/each path)
- Positioning - G00
- Linear interpolation
- Circular interpolation
- Dwell
- Threading, synchronous cutting
- Skip function-G31
- Reference positon return--G28
- Reference position return check--G27
- 2nd referene position return
- Rapid traverse rate (Max. 10m/min)
- Rapid traverse override (F0,25,50,100%)
- Feed per minute/Feed per revolution
- Tangential speed constant control
- Cutting feedrate clamp
- Automatic acceleration/deceleration
- Override cancel
- Manual per revolution feed
- Optional block skip (1)
- Max. programmable dimension (8-digit)
- Program number (04-digit)
- Sequence number (N5-digit)
- Input unit 10 time multiply
- Rotary axis roll-over function
- Coordinate system shift
- Direct input of coordinate system shift
- Manual absolute on and off
- G code system (A)
- Sub program call (4 folds nested)
- Canned cycles (G90, G92, G94)
- Custom macro B
- Chamfering/corner R
- Auxillary Function (M8-digit)
- Spindle speed function (S5-digit)
- Spindle serial output (S5-digit)
- Constant surface speed control
- 1st spindle orientation
- Tool function (T4 digits)
- Tool offset pairs (16 pairs)
- Tool nose radius compensation (G40-G42)
- Tool offset value counter input
- Part program storage length 80m
- Number of registerable programs (63)
- Part program editing
- Background editing
- Status display
- Clock function
- Self-diagnosis function
- Alarm display
- Alarm history display
- Operation history display
- Help function
- Servo setting screen
- Configuration
- Language display English
- Data protection key
- Erase CRT screen display
- External workpiece number search 9999
- Memory card interface
- Reader/puncher interface RS 232C
- External message
- External workpiece number search 15
- Status output signal
- Setting and display unit 10.4” color LCD
- Manual pulse generator

Optional Accessories

- ☐ Increment system 1/10 (0.0001mm, 0.00001”)
- ☐ Tool retract and recover
- ☐ Manual linear/circular interpolation
- ☐ Polar coordinate interpolation
- ☐ Continuous threading
- ☐ Variable lead threading
- ☐ Circular threading
- ☐ Polygon turning
- ☐ Rapid traverse bell shaped acceleration/deceleration
- ☐ Linear acceleration/deceleration after cutting feed interpolation
- ☐ Optional block skip (9)
- ☐ Program restart
- ☐ Cylindrical interpolation
- ☐ Helical interpolation
- ☐ Programmable data input
- ☐ Interruption type custom macro
- ☐ Multiple repetitive cycle
- ☐ Workpiece coordinate system
- ☐ Addition of custom macro common variables (#100-#199-#500-#999
- ☐ Rigid tapping
- ☐ Conversional programming with graphic display
- ☐ Tool offset pairs (64/99 pairs)
- ☐ Tool life management fucntion
- ☐ Automatic tool offset
- ☐ Direct input of tool offset value measured B
- ☐ Part program storage length (160/320/640/1280)
- ☐ Number of registerable programme (125/200/400/1000)
- ☐ Graphic function
- ☐ Fanuc handy file
- ☐ Ethernet Function

NOT TO BE REPUBLISHED

Machine control and its functions

Objective: At the end of this lesson you shall be able to
- **state the functions of CNC machine controls and keys.**

Machine control functions (Fig 1)

Fig 1



TJ20N229011

The commonly used control functions of the FANUC OI mate - TB controller are explained below.

The control system has a 8.4" LCD monitor and the layout of the LCD screen and the alpha - numeric key pad is as given below.

Monochrome

LCD/MDI unit

The layout of the various control keys in the MDI panel are as follows.

MDI key location (Fig 2)

Fig 2

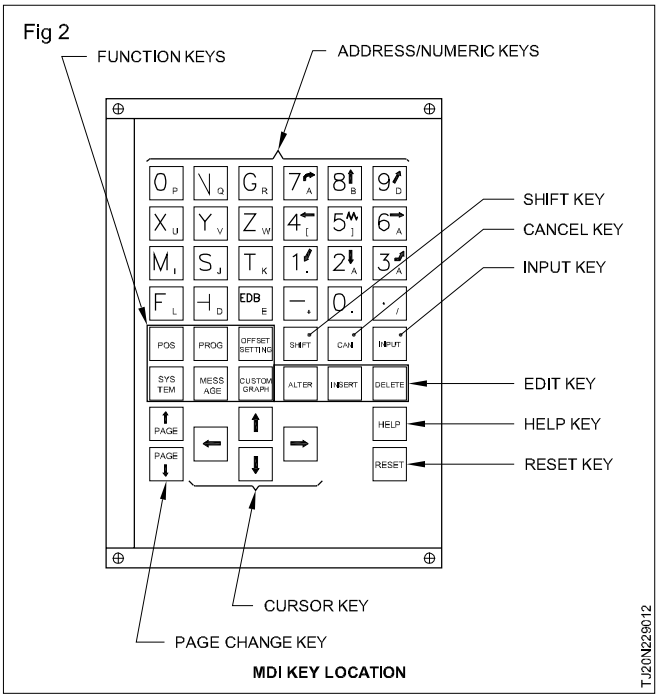

TJ20N229012

NOT TO BE REPUBLISHED

Explanation of the MDI keyboard

S No.	Name	Explanation
1	Reset key 	Press this key to reset the CNC, to cancel an alarm, etc.
2	Help key 	Press this button to use the help function when uncertain about the operation of an MDI key (help function).
3	Soft key	The soft keys have various functions, according to the applications. The soft key functions are displayed at the bottom of the screen.
4	Address and numeric keys 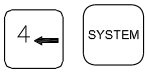	Press these keys to input alphabetic, numeric, and other characters.
5	Shift key 	Some keys have two characters on their keytop. Pressing the <shift> key switches the characters. Special character E is displayed on the screen when a character indicated at the bottom right corner on the keytop can be entered.
6	Input key 	When an address or a numerical key is pressed, the data is input to the buffer, and it is displayed on the screen. To copy the data in the key input buffer to the offset register, etc., press the input key. This key is equivalent to the [Input] key of the soft keys, and either can be pressed to produce the same result.
7	Cancel key 	Press this key to delete the last character or symbol input to the key input buffer. When the key input buffer displays >N001X100Z_ and the cancel key is pressed, Z is cancelled and >N001X100_ is displayed.
8	Program edit keys 	Press these keys when editing the program. 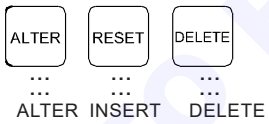
9	Function keys 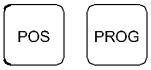	Press these keys to switch display screens for each function.
10	Cursor move keys 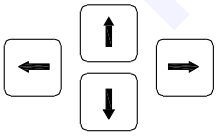	There are four different cursor move keys.  This key is used to move the cursor to the right or in the forward direction. The cursor is moved in short units in the forward direction.  This key is used to move the cursor to the left or in the reverse direction. The cursor is moved in short units in the reverse direction.  This key is used to move the cursor in a downward or forward direction. The cursor is moved in large units in the forward direction.  This key is used to move the cursor in an upward or reverse direction. The cursor is moved in large units in the reverse direction.

© NIMI NOT TO BE REPUBLISHED

S. No.	Name	Explanation
11	Page change keys	Two kinds of page change keys are described below PAGE ↑ This key is used to changeover the page on the screen in the forward direction. PAGE ↓ This key is used to changeover the page on the screen in the reverse direction.

General screen operations (Fig 3)

Fig 3

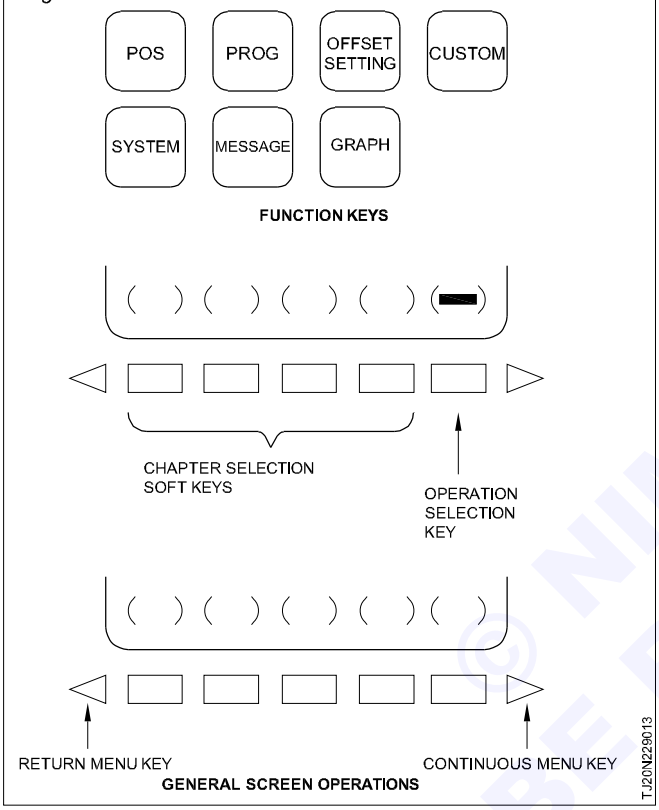

GENERAL SCREEN OPERATIONS

Press a function key on the MDI panel. The chapter selection soft keys that belong to the selected function appear.

Press one of the chapter selection soft keys. The screen for the selected chapter appears. If the soft key for a target chapter is not displayed, press the continuous menu key (next - menu key). In some cases, additional chapters can be selected within a chapter.

When the target chapter screen is displayed, press the operation selection key to display data to be manipulated.

To redisplay the chapter selection soft keys, press the return menu key.

The general screen display procedure is explained above. However, the actual display procedure varies from one screen to another. For details, see the description of individual operations.

Function keys

Function keys are provided to select the type of screen to be displayed. The following function keys are provided on the MDI panel.

POS — Press this key to display the position screen.

PROG — Press this key to display the program screen.

OFFSET SETTING — Press this key to display the offset/setting screen.

SYSTEM — Press this key to display the system screen.

MESSAGE — Press this key to display the message screen.

GRAPH — Press this key to display the graphics screen.

CUSTOM — Press this key to display the custom screen (conversational acro screen).

Program display

The contents of the currently active program are displayed. In addition the programs sheduled next and the program list are displayed. (Fig 4 & 5)

The cursor indicates the currently executed location.

Fig 4

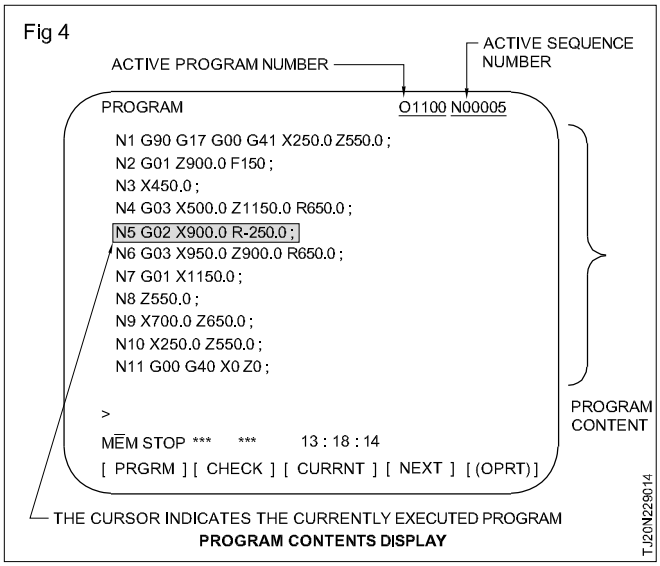

PROGRAM CONTENTS DISPLAY

© NIMI NOT TO BE REPUBLISHED

Fig 5

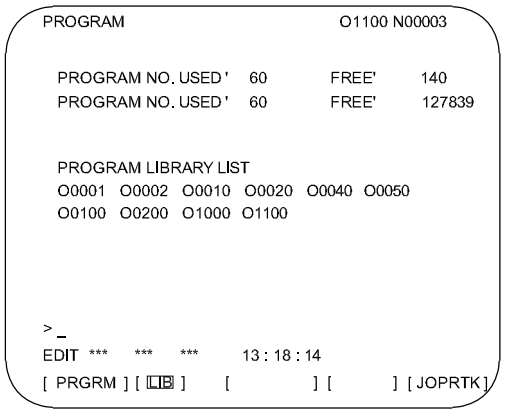

T.J20N229015

Current position display

The current position of the tool is displayed with the co-ordinate values. The distance from the current position to the target position can also be displayed. (Fig 6 & 7)

Fig 6

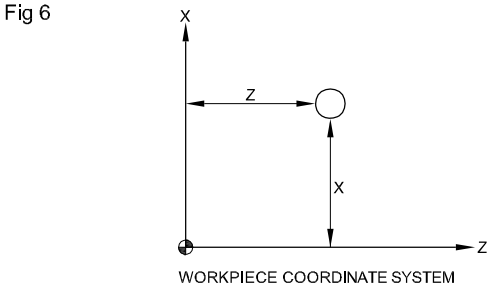

T.J20N229016

Fig 7

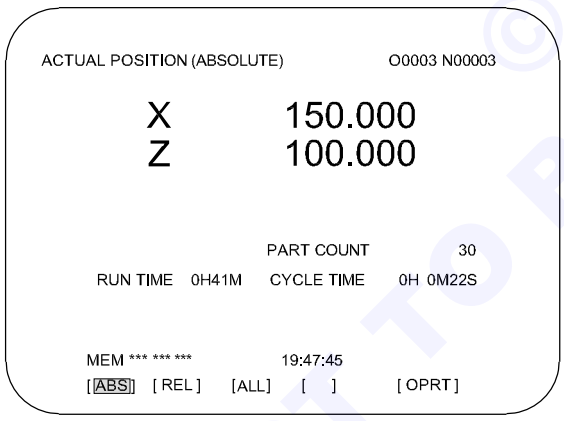

T.J20N229017

POSITION DISPLAY IN THE WORK (ABSOLUTE) COORDINATE SYSTEM

When a trouble occurs during operation, alarm numbers and alarm message are displayed on CRT screen. (Fig 8)

Parts count display run time display

Two types of run time and number of parts are displayed on the screen. (Fig 9)

Fig 8

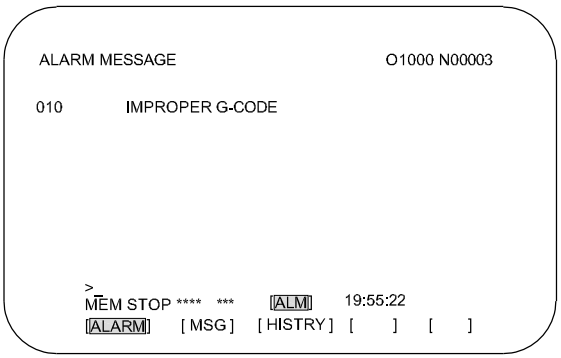

T.J20N229018

Fig 9

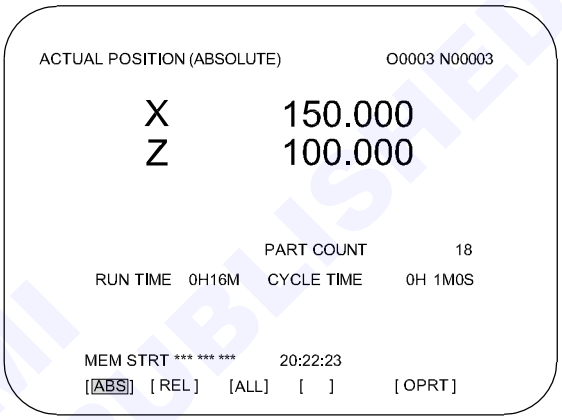

T.J20N229019

Graphic display

The graphic can be used to draw a tool path for automatic operatioSn and manual operation, thereby indicating the progress of cutting and the position of the tool. (Fig 10)

Fig 10

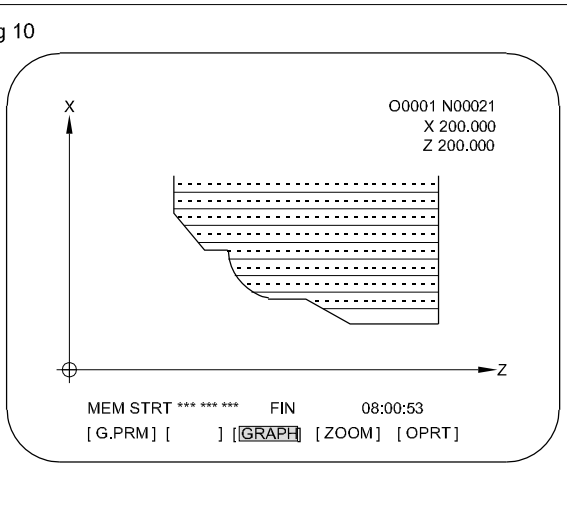

T.J20N229001A

© NIMI NOT TO BE REPUBLISHED

Co-ordinate systems and itspoints

Objectives: At the end of this lesson you shall be able to
- **state what is co ordinate system**
- **list the types of co ordinate system related to CNC machine**
- **explain the each coordinate system and their points**
- **state what is machine zero and work zero.**

A coordinate system is a method for identifying the location of a point on the earth. Most coordinate systems use two numbers, a coordinate, to identify the location of a point. Each of these numbers indicates the distance between the point and some fixed reference point, called the origin. The first number, known as the X value, indicates how far left or right the point is from the origin. The second number, known as the Y value, indicates how far above or below the point is from the origin. The origin has a coordinate of 0, 0.

Types of co ordinate system used in CNC machines

- Catesian co-ordinate system
- Absolute co-ordinate system
- Incremental or Relative co-ordinate system
- Polar co-ordinate system
- Machine co-ordinate system/Machine zero point
- Work co-ordinate system/Work zero point

A **Cartesian coordinate system** is coordinate system that specifies each point uniquely in a plane by a pair of numerical **coordinates,** which are the signed distance to the point from two fixed perpendicular directed lines, measured in the same unit of length. Each reference line is called a coordinate axis of the system, and the point where they meet is its orgin, at ordered pair (0,0). The coordinates can also be defined as the positions of the perpendicular projections of the point on to the two axes, expressed as signed distances from the origin.

One can use the same principle to specify the position of any point in three-dimensional space by three cartesian coordinates, its signed distances to three mutally perpendicular planes (or, equivalently, by its perpendicular projection onto three mutually perpendicular lines).

Coordinate system and ordered pairs

A coordinate system is a two-dimensional number line, for example, two perpendicular number lines or axes.

This is a typical coordinate system:

The horizontal axis is called the x-axis and the vertical axis is called the y-axis.

The centre of the coordinate system (where the lines intersect) is called the origin. The axes intersect where both x and y are zero and is taken as origin The coordinates of the origin are (0,0). (Fig 1)

Fig 1

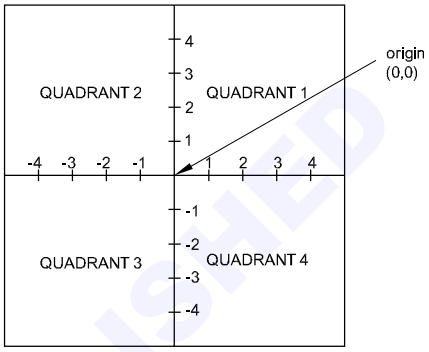

An ordered pair contains the coordinates of one point in the coordinate system. A point is named by its ordered pair in the form of (x,y). The first number corresponds to the X-coordinate and the second to the Y-coordinate.

To graph a point, you draw a dot at the coordinates that corresponds to the ordered pair. It's always a good idea to start at the orgin. The x-coordinate tells you how many steps you have a take to the right (positive) or left (negative) on the x-axis. And the y-coordinate tells you how many steps to move up (positive) or down (negative) on the y-axis.

The ordered pair (3,4) if found in the coordinate system when you move 3 steps to the right on the x-axis and 4 upwards on the y-axis. (Fig 2)

The ordered pair (-7, 1) is found in the coordinate system when you mave 7 steps to the left on the x-axis and 1 step upwards on the y-axis. (Fig 2)

Fig 2

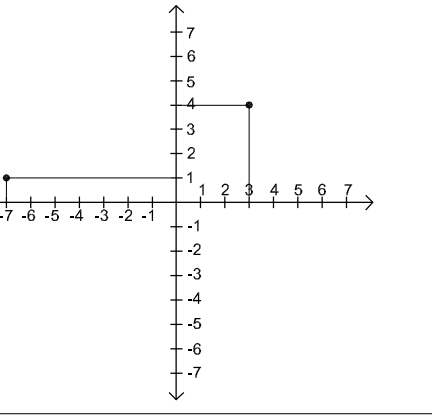

© NIMI NOT TO BE REPUBLISHED

To find out the coordinates of a point in the coordinate sysem you do the opposite. Begin at the point and follow a vertical line either up or down to the x-axis. There is your x-coordinate. And then do the same but following a horizontal line to find the y-coordinate.

Absolute coordinates

Absolute coordinates are based on the orgin (0,0), which is the intersection of the X and Y axes. Use absolute coordinates when you know the precise X and Y values of the point.

With dynamic input, you specify absolute coordinates with the # prefix is not used. For example, entering #3,4 specifies a point 3 units along the X axis and 4 units along the Y axis from the orgin.

The following example draws a line beginning at an X value of -2, Y value of 1, and an endpoint at 3,4. Enter the following in the tooltip.

Command: **line**

From point: **#-2,1**

To point: **#3,4**

The line is located as follows: (Fig 3)

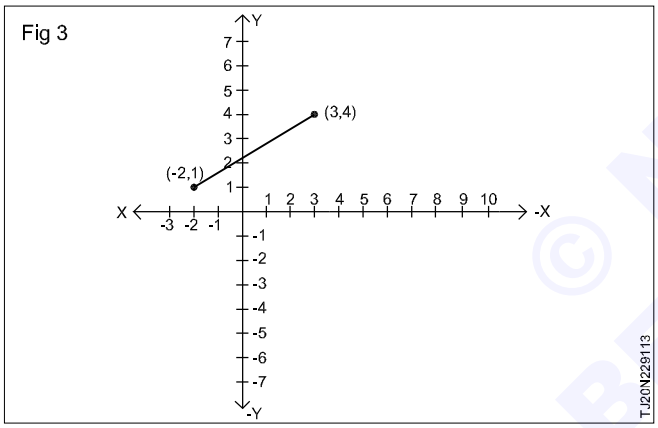

Relative coordinates or incremental coordinate

Relative coordinates are based on the last point entered. Use relative coordinates when you know the location of a point in relation to the previous point.

To specify relative coordinates, precede the coordinate values with an @ sign. For example, entering @3,4 specifies a point 3 units along the X axis and 4 units along the Y axis from the last point specified.

The following example draws the sides of a triangle. The first side is a line starting at the absolute coordinates -2,1 and ending at a point 5 units in the X direction and 0 units in the Y direction. The second side is a line starting at the endpoint of the first line and ending at a point 0 units in the X direction and 3 units in the Y direction. The final line segment uses relative coordinates to return to the starting point. (Fig 4)

Command: **line**

From point: **#-2,1**

To point: **#5,0**

To point: **#0,3**

To point: **#-5,-3**

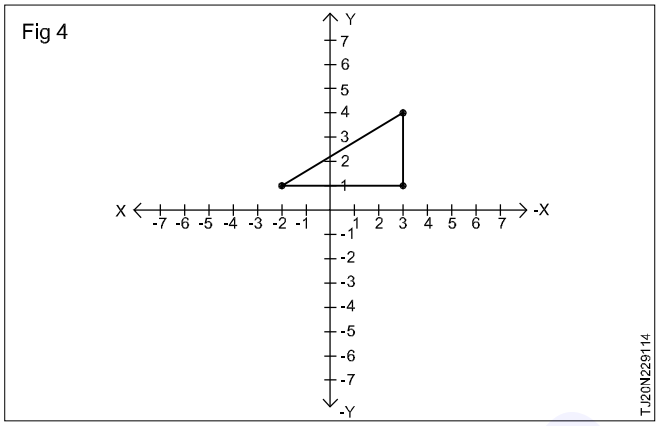

Polar coordinate system (Fig 5)

Points in the polar coordinate system with pole 0 and polar axis L. The point with radial coordinate 3 and angular coordinate 60 degrees or (3, 60°). and the point (4, 210°) represents polar coordinates.

In mathematics, the **polar coordinate system** is a two-dimensional coordinate system in which each point on a plane is determined by a distance from a reference point and an angle from a reference direction.

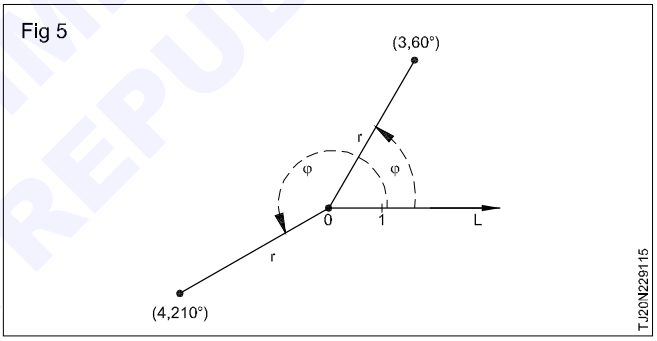

The reference point (analogous to the orgin of a Cartesian coordinate system) is called the pole, and the ray from the pole in the reference direction is the polar axis. The distance from the pole is called the radial coordinate or radius, and the angle is called the angular coordinate, polar angle.

Uniqueness of polar coordinate & conversion to cartesian coordinate.

Adding any number full turns (360°) to the angular coordinate does not change the corresponding direction. Similarly any polar coordinate is identical to the coordinate with the negative radial component and in the opposite direction.

CNC Lathe (turning) Machines

Coordinate system (Fig 6)

To ensure that the control system of the machine will read the specified coordinates correctly to indicate the position of the workpiece; the machine tool has its own “coordinate system”.

© NIMI NOT TO BE REPUBLISHED

Fig 6

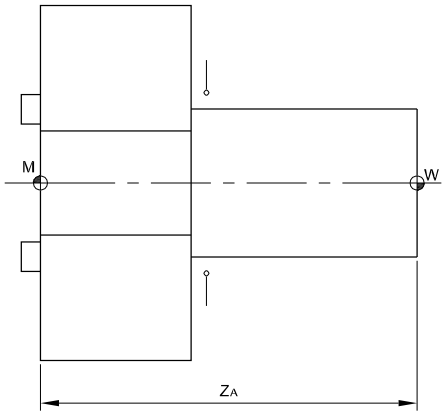

MACHINE ZERO POINT AND WORKPIECE ZERO POINT

T-J20N229116

The following points are part of this system.

Machine Zero Point (M) (Fig 7)

The origin of the coordinate system. It is defined by the manufacturer and cannot be changed. In general, the machine zero point M is located in the center of the work spindle nose for CNC lathes.

Fig 7a shows (M) machine zero point and 7b shows (W) work zero point

Fig 7

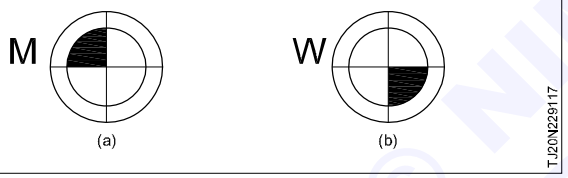

T-J20N229117

Workpiece Zero Point (W) (Fig 8)

The workpiece zero point (W) is the origin of the work part-based coordinate system. Its location is specified by the programmer. The ideal location of the work part zero point allows the dimensions to be directly taken from the drawing. In case of turning the workpiece zero point is generally in the center of the left or right side of the completed part.

Axes on turning machine

Turning Machine axes

CNC Turning machine has at least controllable feed axes, marked as X and Z; (Fig 8)

Fig 8

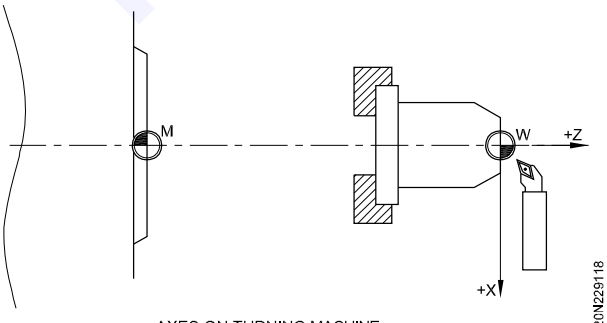

AXES ON TURNING MACHINE

T-J20N229118

- When the cutting tool moves toward and backward the machine spindle, this is called movement along Z axis.
- When the cutting tool moves in cross direction to the longitudinal axis of the workpiece, this is called movement along X axis.
- Positive Z direction is when the tool moves away from the workpiece in Z axis.
- Positive X direction is when the tool moves away from the work part in X axis.

Dimensioning

To machine a workpiece we need a technical drawing on which we should illustrate the required dimensions to make the required shape. To dimension the workpiece we need to specify a certain point on it, from which we should take the measurement. This point is the origin point. The origin point on the workpiece is called Workpiece zero point (W).

There are two types of dimensioning

Absolute Dimensioning (Fig 9)

Fig 9

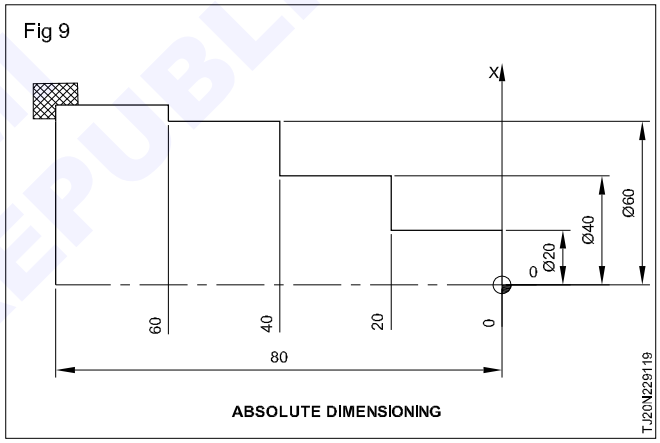

ABSOLUTE DIMENSIONING

T-J20N229119

All measurements are taken from the workpiece zero point.

In the drawings for CNC turning absolute system considers the value of X as the diameter value not the radius.

Incremental Dimensioning (Fig 10)

Uses incremental values that are always measured from the current point to the next point

Fig 10

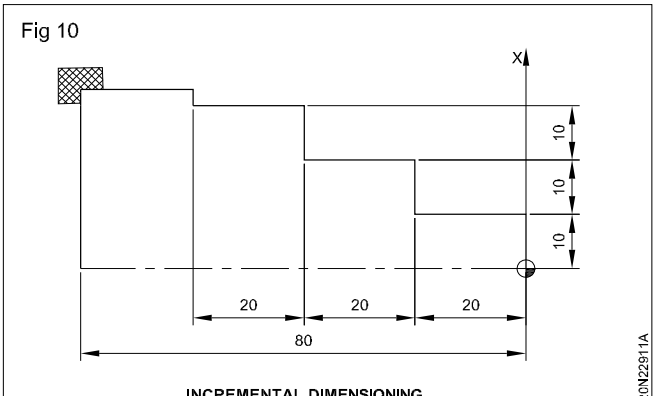

INCREMENTAL DIMENSIONING

T-J20N229114A

© NIMI NOT TO BE REPUBLISHED

Objectives: At the end of this lesson you shall be able to
- **list the two types of turning centers**
- **explain the process of axes identification for horizontal and vertical turning centers.**

CNC lathe types and machine axis

Turning is a machining process used to make cylindrical parts in which the cutting tool moves in a linear fashion while the work piece rotates. A turning center is a lathe with a computer numerical control (CNC).

There are two types of CNC turning centers: Horizontal (Fig 1) and Vertical (Fig 2). Horizontal turning centers are the most common. Vertical turning centers are typically called a vertical turret lathe or VTL.

Fig 1

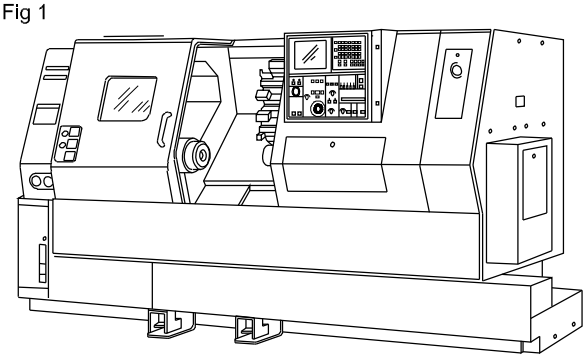

HORIZONTAL TURNING CENTER

T.J20N229211

Vertical turning centre

Vertical turning centre are used where heavy parts has to be machined.

The turret (tool holding device) moving up and down. The chuck mounted in vertical position. (Fig 2)

Fig 2

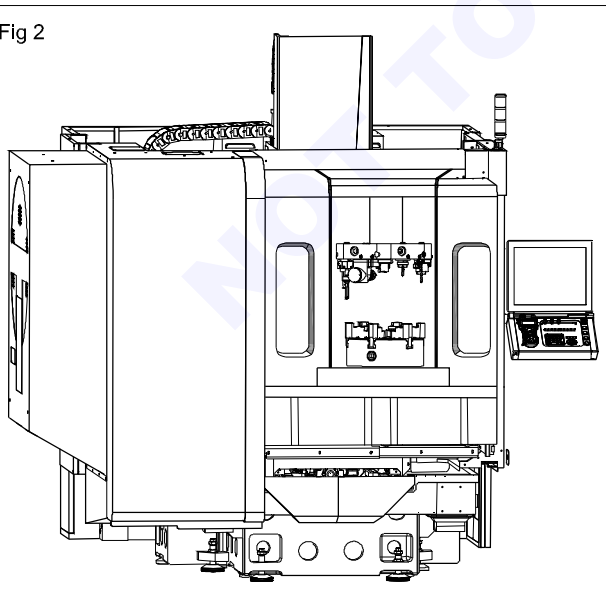

VERTICAL TURNING CENTER

T.J20N229212

Machine axis identification

NC coordinates system

All the NC machine toolmaker's use of Cartesian coordinate system for the sake of simplicity. The guiding coordinate system followed for designating the axes is the well known as right hand coordinate system. (Fig 3)

Designation of axes (Fig 3)

First axes to be identified is the z axis .This is then followed by x and y axes respectively.

Fig 3

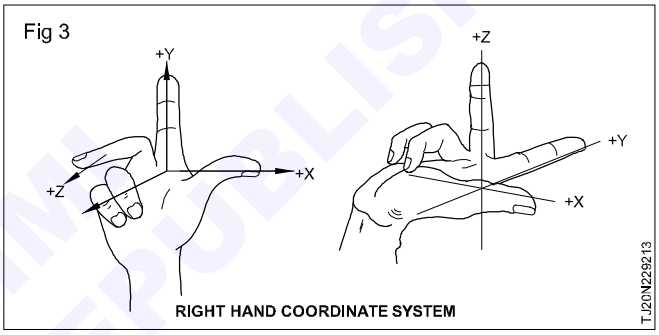

RIGHT HAND COORDINATE SYSTEM

T.J20N229213

Axis system for horizontal turning center (Fig 4)

In turning centers, the spindle axis is designated as Z. The radial axis perpendicular to the z-axis and away towards the principle tool post is termed as x-axis. The machine datum or home position may be the intersection of spindle axis and clamping plane. At the start, the controller display will show the axis position with respect to home The work piece datum is fixed by the programmer on the work piece for the convenience of part programming. The difference between the tool tip position and the turret datum is termed as offset.

Fig 4

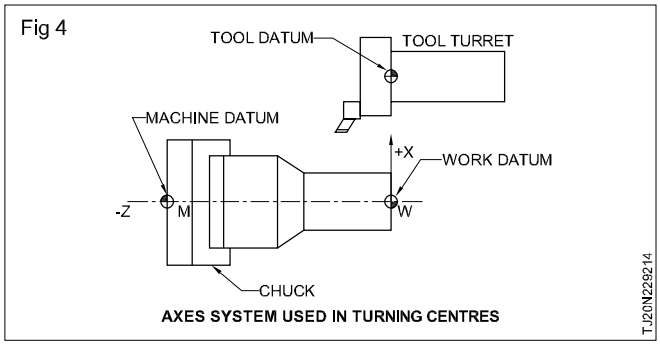

AXES SYSTEM USED IN TURNING CENTRES

T.J20N229214

Vertical turning center (Fig 5)

In the vertical turning center the X axis movement is left and right, Z axis movement is up and down.

© NIMI NOT TO BE REPUBLISHED

Fig 5

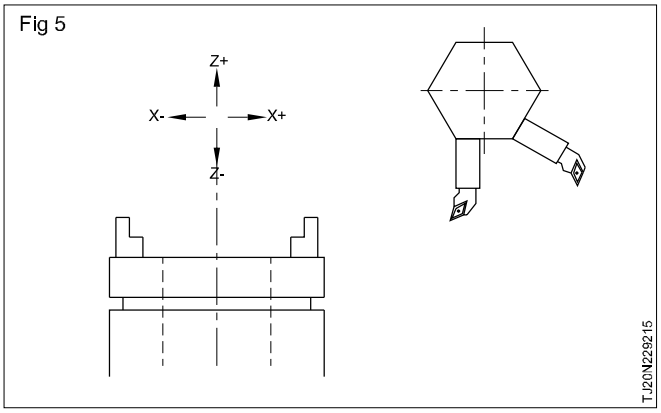

X-axis

The principle motion direction of cutting tool on the work piece is designated as x-axis .It is perpendicular to the z-axis and should be horizontal and parallel to the work holding surface whenever possible.

Z-axis

The z-axis motion is along the spindle axis or parallel to the spindle axis. In the case of machine without a spindle such as shapers and planers, the z-axis is perpendicular to the work holding surface.

For machines such as milling, drilling and lathe, the cutting tools move in the negative z direction to move a tool into the work piece. The positive z motion increases the clearance between the tool holder and work piece surface.

When there are several spindles and slide ways, the spindle perpendicular to the work holding surface may be chosen as the principle spindle. The primary Z motion is then related to the primary spindle. The tool motions of other spindles designated as A, B and C respectively. (Fig 6)

Fig 6

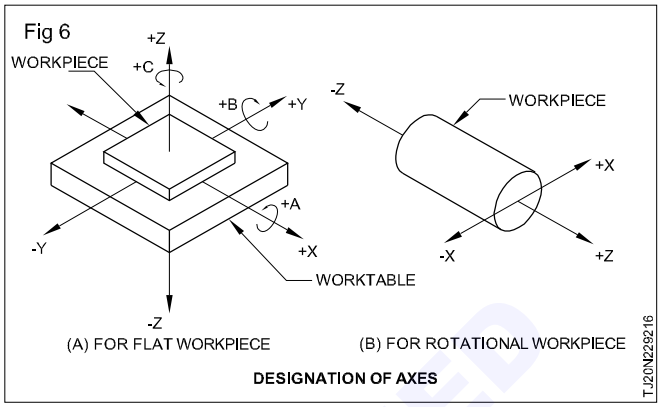

Part programming for turning centers

Diameter programming

The dimensioning of a turned component is generally specified by its diameters. However, in turning operation, the tool should approach the work piece in radial direction for machining. Hence, for the sake of simplicity, most of the turning centers are provided with diameter programming facility.

This means that all the movements of the tool along X-axis should be doubled to represent the diametral rather than radial movement. The selection of radius or diameter programming depends upon the system variable set during the integration of controller with the machine tool.

Preparation of part programming

Objectives : At the end of this exercise you shall be able to
- **explain part programming preparation**
- **state the purpose of 'G' codes and 'M' codes**
- **explain the canned cycles and it formats.**

Introduction

Part programming comprises of collection of data, arrangement of information in a standard format and calculation of tool path, the data relates to dimensions of feature, direction of cutting , tool required, sequencing, and familiarity with NC system codes.

Preparation of part programming

1 Block numbers / sequence number (N words)

Each block of the program has a sequence number which is used to identify the sequence of a block of data in it which in ascending numerical order. When the part program is read, each sequence number is displayed on the panel of NC machine tool, as long as that block commands are performed. This enables the operators to know which sequence of block is being performed practically by the tool. It consists of a character 'N' followed by a three digit number raising from '0' to '999'.

2 Preparatory Function (G-words)

The preparatory function is used to initiate the control commands, typically involve a cutter motion i.e. It prepares the MCU to be ready to perform a specific operation and interpret, the data which follows the way of this function. It is represented by the character 'G' followed by a two digit number i.e.'00 to 99'.These codes are explained and listed separately.

3 Dimension words (X, Y & Z words)

These dimension word are also known as 'co-ordinates'. Which give the position of the tool motion .These words can be of two types:

a Linear dimension words

- X, Y, Z for primary or main motion.
- U, V, W for secondary motion parallel to X, Y, Z axes respectively.

© NIMI NOT TO BE REPUBLISHED

- p, q, r for another third type motion parallel to X,Y,Z axes respectively.

b Angular Dimension Words

- a, b, c, for angular motion around X, Y, Z axes respectively.
- I, J, K in case of thread cutting is for position of arc centre; thread lead parallel to X, Y, Z axes.

These words are represented by an alphabet representing the axes followed by five or six digits depending upon the input resolution given. The following points may be noted while calculating the number:

- Decimal point should be not be allowed e.g. x = 7.875 will be represented as X07875 in a five system i.e. the last three digits are used for the decimal part of the number. Some machines allow omission of leading zeros, hence the same can be represented as X7875.
- It is recommended that dimensions should be expressed in mm.
- All angular dimensions should be expressed as a decimal fraction of a revolution.
- In absolute system, all dimensions should be positive.
- In incremental system the '+','-'sign represent the direction of motion.

4 Feed Rate Word(F - word)

It is used to program the proper feed rate, to be given in mm/min or mm/rev as determined by the prior 'G' code selection G94 and G95 respectively. This word is applicable to straight line or contouring machines ,because in Point to Point (PTP) systems a constant feed rate is used in moving from point to point.

It is represented by "F" followed by three digit number e.g.F100 represents a feed rate of 100 mm/min.

5 Spindle speed / cutting speed word (S - word)

It specifies the cutting speed of the process or the rpm of spindle. It is also represented by 'S' followed by the three digit number .If the speed is given in meter per min. then the speed is converted in rpm rounded to two digit accuracy, e.g. S-800 represents the 800 rpm of spindle.

6 Tool selection word (T - word)

It consists of "T" followed by max five digits in the coded number. Different numbers are used for each cutting tool. When the "T" numbers read from programme, the appropriate tool is automatically selected by ATC(Automatic tool changer).Hence this word is used only for machines with ATC or programmable tool turret .e.g. T01,T02,T03 represents the tool selection word. Also, sometimes T-word used for representing a tool offset number corresponding to X Y and Z directions. With the help of two additional digits, given after a decimal point .(In HMT T-70.9 pairs of tools offset can be stored).

7 Miscellaneous words (M-words)

It consists of character M followed by two digit number representing an auxiliary function such as turning ON/ OFF spindle ,coolant ON/OFF or rewinding the tape. These functions do not relate two dimensional movement of the machine.

8 End of Block (EOB)

It identifies the end of instruction block.

G and M codes (G-codes)

This is the preparatory function word, consists of the address character G followed by a two digit code number, known as G-code. This comes after the sequence number There are two types of G codes modal and non-modal. Modal codes remain active until cancelled by a contradictory and code of same class .e.g. G70 is a modal code which defines that the dimensional units are metric. It will remain active until cancelled by G-71,which tells that the dimensional units are in inches now. Non-modal G codes are active only in the block in which they are programmed.G04 is non-modal code.

List of G codes

G codes are instructions describing machine tool movement. A G code quite often requires other information such as feed rate or axes coordinates The FANUC standard has a large selection of G codes, all of which may not be available on all the machines. There are three G code system: A, B and C. System A is the most commonly used. Following is the list of some common G codes of system A:

Table - 1

Code	Group	Description
*G00	01	Rapid traverse
G01	01	Linear interpolation
G02	01	CW circular interpolation
G03	01	CCW circular interpolation
G04	00	Dwell time
G10	00	Offset setting by program
G20	06	Inch data input
G21	06	mm data input
G27	00	Reference point (Home) return check
G28	00	Reference point (Home) return
G30	00	Return to second reference point(Home)
G32	01	Thread cutting
G34	01	Variable lead thread cutting
G40	07	Tool nose radius compensation cancel
G41	07	Tool nose radius compensation left
G42	07	Tool nose radius compensation right

© NIMI NOT TO BE REPUBLISHED

G50	00	Work coordinate change / maximum spindle speed setting
G54-G59	14	Work piece coordinate system (G54 is default)
G70	00	Finishing cycle
G71	00	Multiple turning cycle (Stock removal in turning)
G72	00	Multiple facing cycle (Stock removal in facing)
G73	00	Pattern repeating cycle
G74	00	Peck drilling cycle
G75	00	Grooving cycle
G76	00	Multiple threading cycle
G90	01	Single turning cycle
G92	01	Single threading cycle
G94	01	Single facing cycle
G96	02	Constant surface speed
*G97	02	Constant RPM
G98	05	Feed per minute
*G99	05	Feed per revolution

When the power is turned 'ON' or 'Reset button' is pressed, the 'G' codes with * mark become active.

List of M codes

The list given in table is a typical representative list .All of these may not be available on all the machines. On the other hand, some machine may use some extra code also. Note that most of the m codes, except a few such as M00, M01, M02, M03, M04, M05, M06, M08, M09, M19, M30, M98 and M99,are machine specific. Refer to the specific machine manual for the list of available M codes and their functions. M codes are defined and implemented by the machine tool builder. The control manufactured defines only G codes which are same on all the machines with the same control.

Table - 2

Code	Description
M00	Program stop
M01	Optional stop
M02	End of program execution
M03	Spindle forward(CW , as viewed towards the tail-stock)
M04	Spindle reverse (C CW , as viewed towards the tail-stock)
M05	Spindle stop
M06	Auto tool change V (not needed on recent controls)
M08	Coolant ON
M09	Coolant OFF
M10	Chuck open (for machines with automatic chuck)
M11	Chuck close
M13	Spindle forward and coolant ON /sub-spindle on
M14	Spindle reverse and coolant ON/sub OFF
M19	Spindle orientation
M25	Quill extend
M26	Quill retract
M29	DNC mode
M30	Program reset and rewind
M38	Door open (for machines with automatic door)
M39	Door close
M40	Parts catcher extend
M41	Parts catcher retract
M43	Swarf conveyor forward
M44	Swarf conveyor reverse
M45	Swarf conveyor stop
M48	Lock feed and speed at 100%
M49	Cancel M48 (default)
M52	Threading pull out angle=90° (default)
M53	Cancel M52
M56	Internal chucking
M57	External chucking
M62	Auxiliary output-1 on
M63	Auxiliary output-2 on
M64	Auxiliary output-1 off
M65	Auxiliary output-2 off
M66	Wait for input -1
M67	Wait for input-2
M66	Wait for input -1
M67	Wait for input-2
M68	Turret indexing (tool changes) only at home position
M69	Turret indexing anywhere
M70	Mirror in X on
M76	Wait for input -1 to go low
M77	Wait for input -2 to go low
M80	Mirror in X off
M98	Subprogram call
M99	Return to the calling program

© NIMI NOT TO BE REPUBLISHED

Part program

A set of commands given to the NC for machine motion is called a program. A program is composed of number of Blocks. Part program is used to specify the machining process for the cutting tools.

Example

O1203;

N1;

G28 U 0.0 W 0.0;

G50 S 1200 T 0300;

_____ ;

_____ ;

_____ ;

M01;

Part program

N2;

G28 U 0.0 W 0.0;

G50 S 1200 T 0200;

_____ ;

_____ ;

_____ ;

M01;

M30;

Part program

Decimal point input

Decimal point is used to input the units like Distance, Time, and Angle .

X 25.0 is use for input the distance value . X25.0 equal to 25mm or 25 inch.

G04 X1.0 is used to input the dwell time value.X1.0 is equal to one second.

Angle 45° is used for input the angle value.Angle 90° is equal to 45°

The following are the same meaning, in the case of decimal point.

X20.

X20.0

X20.00

X20.000

All are same meaning of movement of X 20 mm

If the Decimal point is eliminated. The system read in microns.

X 50 = 0.05mm

X 500 = 0.5mm

X 5000 = 5.0mm

Decimal point can be input for the following addresses.

X, Z, U, W, A, B, C, I, J, K, P, R, Q, F.

Note:

1 micron=0.001mm

1 mm=1000 microns

1 inch=25.4mm

1 sec=1000 millisec

Structure or format of a part program

The complete part program for a given component consists of a beginning code of %.A part program consists of large number of blocks each representing an operation to be carried out in the machining of the part. The words in each block are usually given in the following order.

- Sequence number(N-word)
- Preparatory word(G-word)
- Coordinates (X-,Y-,Z- words for linear axes; A-, B-, C- words for rotational axes)
- Feed rate (F-word)
- Spindle speed(S-word)

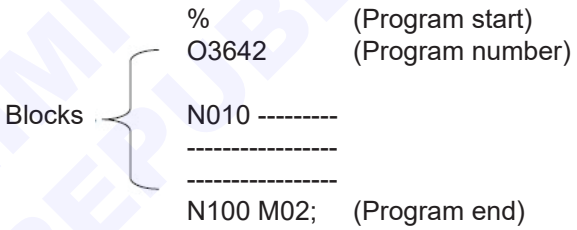

- Tool selection(T-word)
- Miscellaneous command (M-word)
- End -of-block(EOB symbol)

The structure of part program used in Fanuc controller is given below.

Program number

Each of the program that is stored in the controller memory requires an identification. It is used while running and editing of the programs directly from the control console. This identification is specified in terms of a program number with 'O' word address. The number can be a maximum of four digits.

Sequence number (N-word)

Each block in a part program always starts with a block number, which is used as identification of the block. It is programmed with a 'N' word address.

Coordinate function

The coordinate values are specified using the word address such as X, Y, Z, U, V, W, I, J, K, etc. All these word address are normally signed along with decimal point depending upon the resolution available in the machine tool.

© NIMI NOT TO BE REPUBLISHED

Comments

Parentheses are used to add comments in the program to clarify the individual function that are used to add comments in the program .When the controller encounters the opening parenthesis. It ignores all the information till it reaches the closing parenthesis.

Example

N010 G00 Z50 M05(Spindle stops and rapidly moves up)

Table common word addresses used in word address format

Address	Function
N	Sequence number to identify a block.
G	Preparatory word that prepares the controller for instruction given in the block.
X, Y, Z	Coordinate data for three linear axes.
U, V, W	Coordinate data for incremental moves in turning in the X,Y and Z directions respectively.
A, B, C	Coordinate data for three rotational axes X, Y and Z.
R	Radius of arc, used in circular interpolation.
I, J, K.	Coordinate values of arc centre, corresponding to X, Y and Z-axes respectively.
F	Feed rate per minute or revolution in either inches or millimeters.
S	Spindle rotation speed.
T	Tool selection, used for machine tools with automatic tool changer or turrets.
D	Tool diameter word used for offsetting the tool.
P	It is used to store cutter radius data in offset register. It defines first contour block number in canned cycles.
Q	It defines last contour block number in canned cycles.
M	Miscellaneous function.

M01 - Optional stop

This function is same as 'M00', But it will stop only when Optional stop button in the Machine panel is 'ON'. Then cycle is started to continue by pressing Cycle Start Button.

M02 - Programme end

The code is inserted at the end of the program. The machine stops permanently. Spindle rotation, Feed of axis and coolant discharge all stops. The system is reset by pressing Reset button in the machine panel and new cycle is started by pressing Cycle start.

M03 - Spindle ON clockwise

By programming 'M03' the spindle is enabled to run in the clockwise direction.

M04 - Spindle ON counter clockwise

By programming M04 the spindle is enabled to run in the counter clockwise direction.

M05 - Spindle stop

By programming 'M05' the spindle rotation is stopped.

M08 - Coolant ON

By programming 'M08' coolant motor switches 'ON'.

M09 - Coolant OFF

By programming 'M09' coolant motor switches 'OFF'.

M30 - Program end & rewind

When CNC reads the code 'M30' the main program End and Rewind . That is the CNC control returns the cursor to the starting line of the program.

G - Codes (preparatory functions)

G codes take active part in part program execution and are programmed by letter G followed by two digits.

G codes once programmed, remains active until another. G code of the same group is programmed, after which the previous one gets cancelled, are said to be modal.

G codes which remains active only in the block in which it is programmed, is said to be Blockwise active (or) one shot G code.

G00 - Rapid traverse

The Tool moves at a rapid (fast) traverse rate with linear interpolation. The rapid traverse rate depends upon the machine type (for example maximum speed in a two wheeler is 80-120 Km/hr depends on type of make).

This can be used in air movement like positioning, relieving, non contact with work piece.

Format

1 G00 X ---------;

2 G00 Z----------;

3 G00 X------ Z----;

© NIMI NOT TO BE REPUBLISHED

G00 - code used for the following operations

1 Machining start

Making the tool approach the work piece.

2 During machining

Moving the tool to next command position when it is not in conduct with the work piece.

3 Machine end

Separating the tool from the work piece.

G01 - Linear interpolation (straight cutting)

The cutter moves at specified feed rate. The feed rate is specified by address 'F' in the program.

Format

1 G01 X------- F-----;

Application

a Facing

b Grooving etc.

2 G01 Z-----F-------;

Application

a Straight turning

b Drilling etc

3 G01 X-----Z------F------;

Application

a Taper turning

b Chamfering

Where 'F' is the cutting feedrate specified in mm/Rev.

Function F

The feed rate is used to move the tool from one point to another point with constant feedrate. Feed is normally is given mm/rev. or mm/min. The rapid traverse rate and feed rate both are controlled by feed override switches in the machine panel.

Example

F ☐ ☐ ☐ ☐ Four digits number following the address F

G01 X 50.0 Z -50.0 F0.1; X -axis & Z - axis move with feed 0.1mm/Rev.

Circular interpolation (Fig 1)

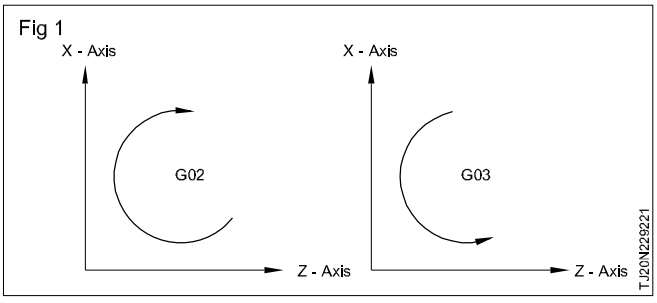

G02-Circular interpolation clockwise direction

G03-Circular interpolation Anti clockwise direction

Format

G02 / G03 } X – –Z – –R – –F – –;

OR

G02 / G03 } X – –Z – –I – –K – –F – –;

Where

X Z - End point of Arc

I K - Distance between start point of arc to center point of arc in X & Z axis

R - Radius of the arc

F - Feed

Command I and K specify the distance from the start point of arc to the center point of arc must be specified incrementally even under Absolute mode and sign (+) or (-) for Values I & K is determined by the direction.

Example

G02 X 40.0 Z-5.0 R 5.0 F 0.1

G03 X 40.0 Z-5.0 R5.0 F 0.1

Where, R=Radius

G04-Dwell

If a block with G04 is real during automatic operation, the feed is stopped for the time followed U, X, P, and then the next block will be executed.

Format

G04 (U, X, P) time

Example

G04 U 1.0 (Dwell of 1.0 second)

Note

Decimal point is not available in 'P'

Ex. Dwell of 2.5 seconds.

G04 U 2.5

G04 X 2.5

G04 P 2500

G28 - Zero Return (Home Position, First Reference value)

It is an inherent position on a machine axis. Automatic Reference Point Return is a function to return each axis to this inherent position automatically.

1 G28 U0

2 G28 W0

3 G28 U0 W0

© NIMI NOT TO BE REPUBLISHED

G30 - Second reference return

It is same as G28.But is to settled before First Reference Value (G28). It is called Temporary Reference Value.

1 G30 U0

2 G30 W0

3 G30 U0 W0

1 G50 - Co-ordinate value setting

G50 X---Z---;

G50 X 300.0 Z 150.0;

2 Maximum spindle speed setting

G50 X S---;

G50 S 3000

G96-Constant Surface Speed Control (Cutting Speed Specification)

The G96 is used with an "S"-Function.

The G96 is used when the cutting speed is specified.

When G96 command is used the spindle speed is changed automatically, as the cutting diameter is changed. That is for smaller work piece of its cutting diameter, the spindle speed becomes higher.

Calculation for cutting speed

$$V = \frac{\pi DN}{1000} = \text{mtr/min}$$

Where

V = cutting speed

D = Diameter of the work piece in 'millimeter'

N = spindle speed in rpm

G97-Constant Surface Speed Control Cancel (Spindle Speed Specification)

The G97 is used when the spindle rotating speed is specified.

Ex. G97 S300 M03.

With this spindle rotates at 300 rpm.

For the following should use G97 always

a Threading

b Tapping

c Drilling etc

Tool function (Fig 2)

Address: T

A four digits number address T Specifies the tool number and tool offset number.

Format

Example : T01 01

Fig 2

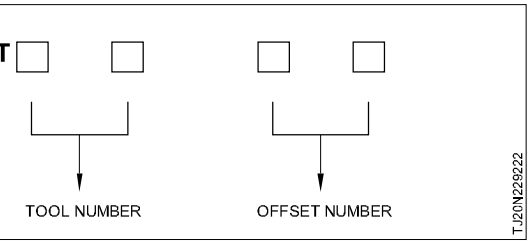

Tool Number

The left most two digits specify the number of tool.

Offset Number

The right most two digits specify the number of tool offset.

Types of Offsets

There are two types offsets:

1 Wear offset

2 Geometrical offset

1 Wear offset

The tool is moved adding the wear amount to part program. Input the offset amount to the same number as the number on offset screen (WEAR)

2 Tool Geometry offset

The distance from top of the tool fixed on turret at machine zero point to the work piece zero point is input as tool geometry offset with this the CNC recognizes the position of work piece zero point. Input the offset amount to the same number as the number on offset screen (Geometry).

Tool geometry offset (Fig 3)

This offset amount is not need to be cancelled after every tool use because the next input of tool geometry offset cancels former offset automatically.

Fig 3

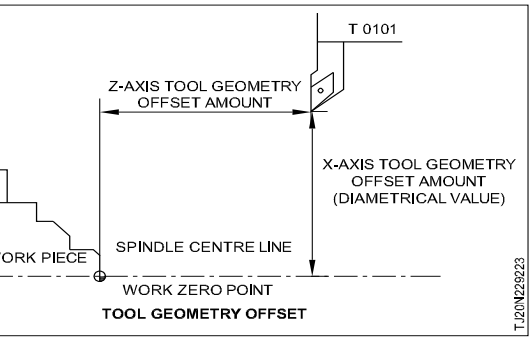

This offset amount is not need to be cancelled after every tool use because the next input of tool geometry offset cancels former offset automatically.

Tool wear offset

The tool wear offset is used to modify the finished work piece dimension in order to keep them within their tolerances. The programmed path is shifted by the offset amount parallel to X and Z axes. The offset amount is input to "TOOL OFFSET /WEAR".

When the control reads T0101 and executes, the tool is shifted by amount which is input in the tool wear offset number (X-0.600, Z0.300).

© NIMI NOT TO BE REPUBLISHED

After the machining the tool is returned near the starting point and if T0100 (Tool wear offset cancel) is executed, it returns to the starting point before offset. The same movement is executed for other tools, only to assign tool wear offset numbers which are required on the programming and the amount to be offset should be decided by the operator.

Procedure for setting work coordinate system (Fig 4)

Step 1 Make sure that the component is securely clamped.

Step 2 Now bring one of the tool near the face of the job.

Step 3 I. Select MDI mode.
II. Press PROGRAM button.

Step 4 Enter S500

Step 5 Select handle/jog mode and select the appropriate feed.

Step 6 Rotate the spindle in CW or CCW depending on the type of the tool.

Step 7 Light facing out be taken up to the center.

Step 8 After the finish cut, move the tool back in x only. do not disturb Z-axis.

Step 9 Now switch off the spindle.

Step 10 Press MENU offset. The wear geometrical and work shift are displayed on CRT.

Step 11 Now, press GEOM soft key and position the cursor using cursor movement buttons to be required offset number corresponding to the tool used.

Step 12 Press measure(m) key and press Z. Enter Zero(MZ0).

Step 13 Now rotate the spindle in appropriate direction and machine on OD

Step 14 Do not move X.

Step 15 Take Z away from the job.

Step 16 Stop the spindle.

Step 17 Press MENU OFFSET PB.

Step 18 Press 'GEOM' soft key.

Step 19 Position the cursor to the required tool offset number.

Step 20 Press M….X….

Step 21 Input "The OD dimension measured. The X-The X-offset for the said tool is set.

Step 22 Repeat the procedure for all tools.

Step 23 After taking offset, select MDI and issue S0.

Programming method

In CNC for programming in Lathe, Absolute Command and Incremental Command are available.

Fig 4

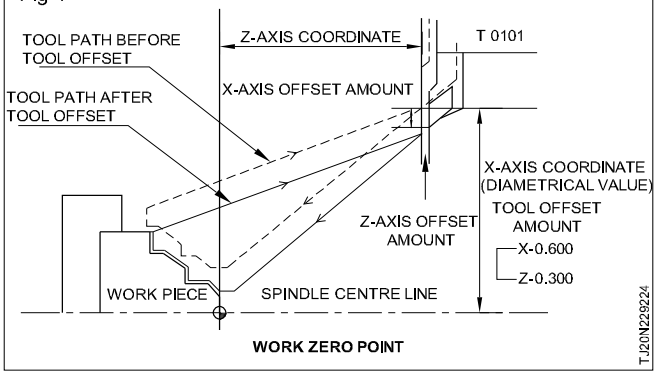

Absolute method (Fig 5)

In absolute dimensions programming, all the points of the tool is coming from the datum point (or) zero point. In CNC Lathe machines "X" and "Z" is the absolute input. The "X" means diameter of work piece and the "Z" means distance from the finished end surface of work piece.

All the travel commands for tool are mean their co-ordinate value from the work piece zero point (X0, Z0).

Fig 5

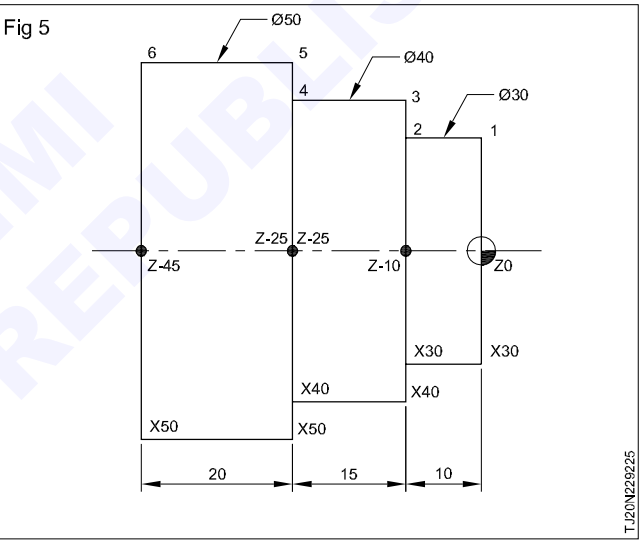

In Fig 5 points 1 to 6 can be specified as follows in absolute dimension programming.

Position	X	Z
1	30.0	0.0
2	30.0	- 10.0
3	40.0	- 10.0
4	40.0	- 25.0
5	50.0	- 25.0
6	50.0	- 45.0

Incremental method (Fig 6)

In this system, tool move from the previous point. In the incremental programming the address "U" (diametrical) for "X" axis and the address "W" for "Z" axis are used to distinguish incremental program from the absolute program.

The incremental command should have the direction (+/-) and distance from currently specified point to next command point.

© NIMI NOT TO BE REPUBLISHED

Fig 6

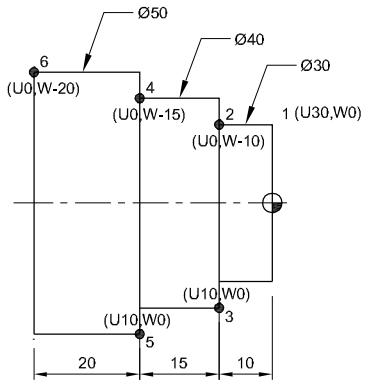

Example

In the Fig 6 the points, 1 to 6 can be specified as follows in incremental dimension programming.

Position	U	W
1	30.0	0.0
2	0.0	-10.0
3	10.0	0.0
4	0.0	-15.0
5	10.0	0.0
6	0.0	-20.0

The tool path for finish cutting of a profile can be easily derived by offsetting the nose radius. However, at the beginning and end of inclined path, it is necessary to make calculation based on simple trigonometry for the offset point from the original contour. By using the cutter compensation, the need for all complex calculations will be eliminated. The programming for the finishing cutting will be the direct path of the actual contour to be machined. (Fig 7)

Fig 7

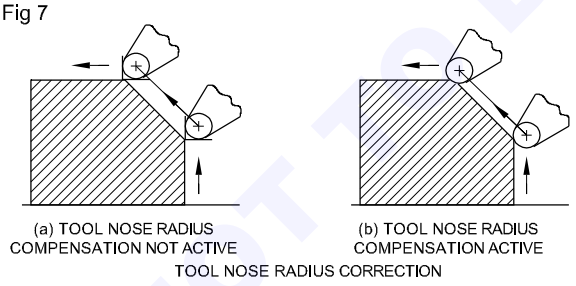

However, even after compensating the nose radius, the point of contact between the tool nose and the work piece will still be along the nose radius periphery which will be changing depending upon the orientation of the tool with respect to the cut surface. For example, the tool will leave a small amount of metal along the inclined surface, when the tool nose radius compensation is not active. For this purpose, the turning centre controllers will provide the necessary correction.

If the correction is active, then the controller automatically compensates and removes the unwanted material. However, in order for the correction to be active, the controller will have to know the correct orientation of the nose radius with respect to the machining surface. For this purpose, nose radius direction is included in the tool-offset registers.

Tool nose radius compensation (Fig 8)

The following data's must be specified to carry out automatic tool nose radius compensation, to obtain required profile exactly.

Fig 8

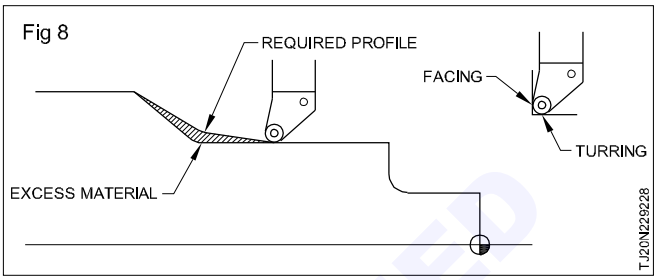

- Give in the program (finish turning and boring). G41 (Tool Left) or G42 (Tool Right), The position of tool viewing along the traveling direction and G40 (Tool Nose Radius Compensation Cancel). (Fig 9)

Fig 9

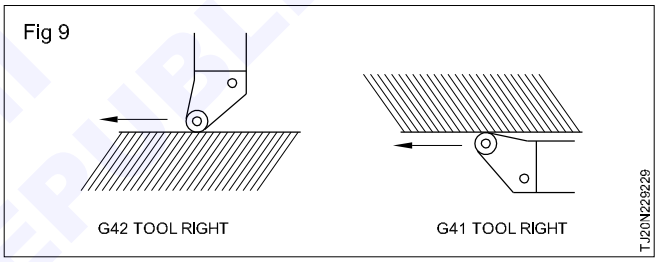

- Input nose radius of tool to R in geometry offset.
- Input the imaginal nose position to T in geometry offset. (Figs 10&11)

Fig 10

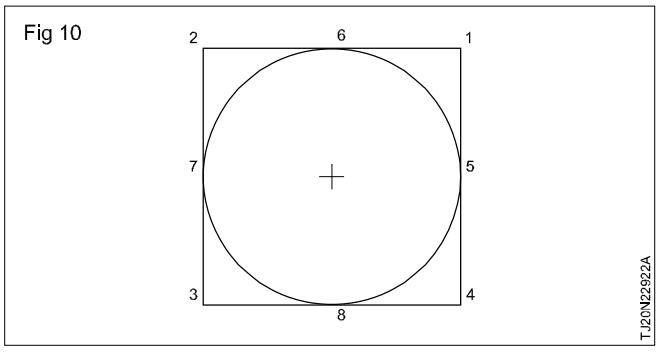

Example programmer

Facing operation (Fig 12)

In facing operation the tool moves down wards with parallel to X axis. The depth of cut in Z axis.and material removal in X axis. If work piece diameter is 100.0mm then the program as follows

O01234

G28 U0 W0

T0101

© SSMI NOT TO BE REPUBLISHED

Fig 11

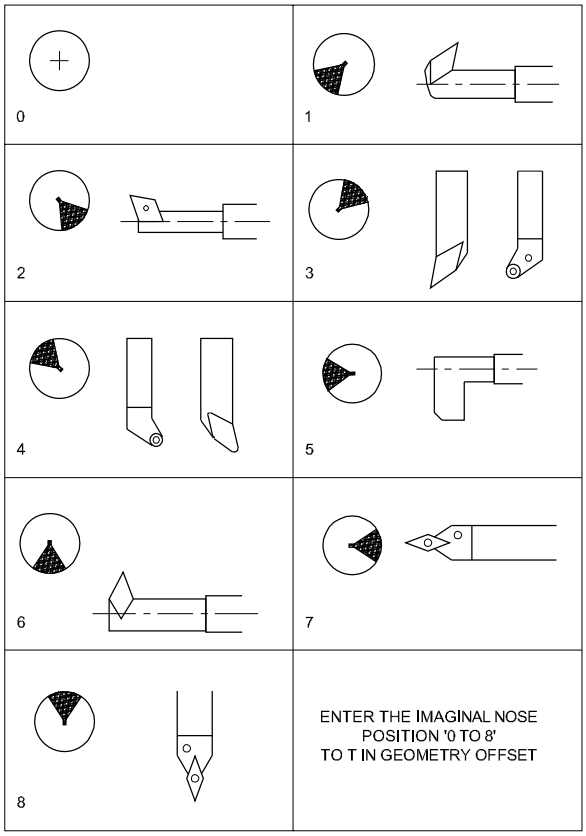

G96 S150

G50 S1500 M03

G0 X102.0 Z0.0 M08

G1 X-1.6 F0.1

G0 X100.0 Z2.0 M09

G28 U0 W0

M30

Fig 12

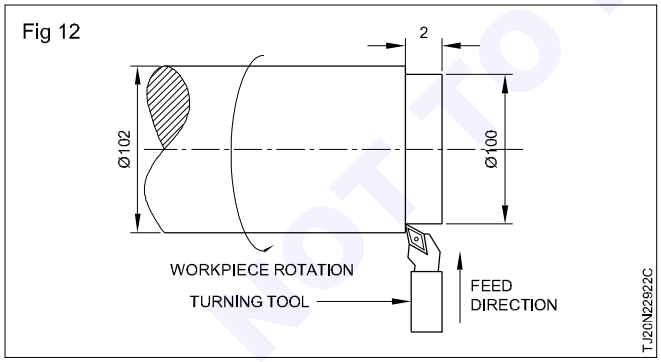

G71-Profile Turning Cycle (Fig 13)

Format: G71 U__ R__;

G71 P__ Q__ U__ W__ F__;

U - Depth of cut per pass in 'x' axis. (Radial value).

R - Tool relief.

P - Starting block number.

Q - Ending block number.

U - Finishing allowance in 'x' axis.

W - Finishing allowance in 'z' axis.

F - Feed.

Fig 13

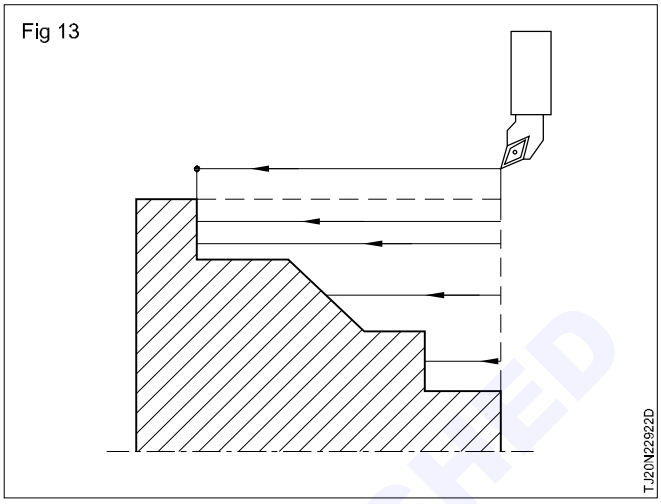

G70 - Finishing Cycle (Fig 14)

Format: G70 P__ Q__ F__;

P - Starting block number.

Q - Ending block number.

F - Feed.

Fig 14

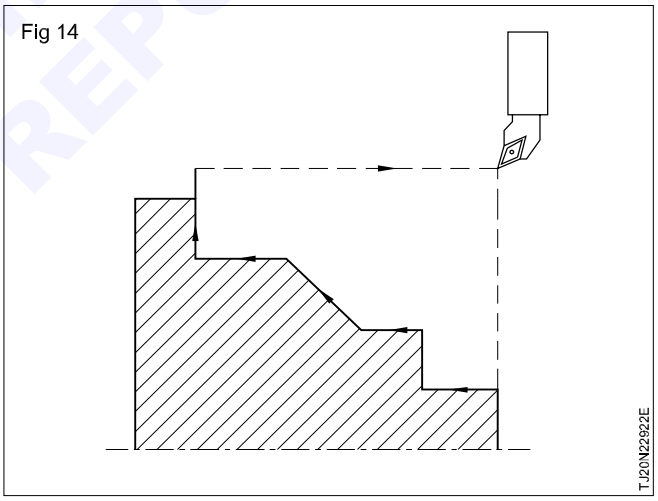

Example: 1 (Fig 15)

O0010;

N10 G28 U0 W0;

N20 T0101;

N25 G96 S200

N30 G50 S1500 M03;

N60 G00 X42.0 Z2.0;

N70 G71 U2.0 R1.0;

N80 G71 P90 Q165 U1.0 W1.0 F0.25;

N90 G01 X16.0;

© NIMI NOT TO BE REPUBLISHED

N100 Z0.0

N110 X20.0 Z-2.0;

N120 Z-10.0;

N130 X28.0;

N140 Z-25.0;

N150 X40.0 Z-31.0;

N160 Z-51.0;

N165 X45.0

N170 G00 X42.0 Z2.0;

N180 G70 P90 Q165 F0.10;

N190 G00 X100.0 Z50.0 M09;

N200 G28 U0 W0 M05;

N210 M30;

Fig 15

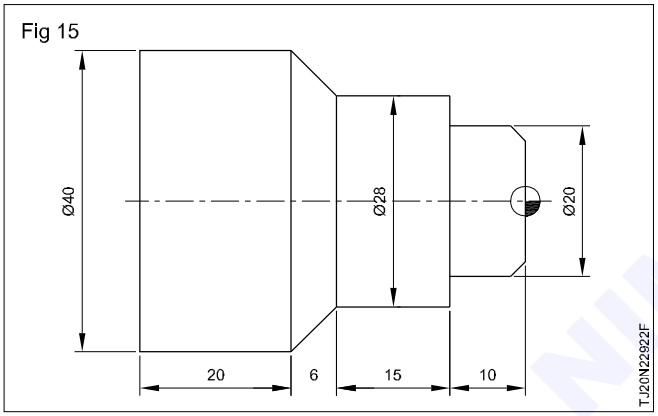

G74- Peck Drilling Cycle (Fig 16)

Format: G74 R__;

G74 Z__ Q__ F__;

R - Tool relief.

Z - Total depth.

Q - Depth of cut per pass (in microns).

F - Feed.

Example: 1

O0003;

N5 G28 U0 W0;

N10 T0101; (10 mm drill)

N15 G97 S500 M03;

N20 G00 X0.0 Z2.0 M08;

N25 G74 R5.0;

N30 G74 Z-60.0 Q10000 F0.10;

N35 G00 Z3.0 M09;

N40 G28 U0 W0 M05;

N45 M30;

Fig 16

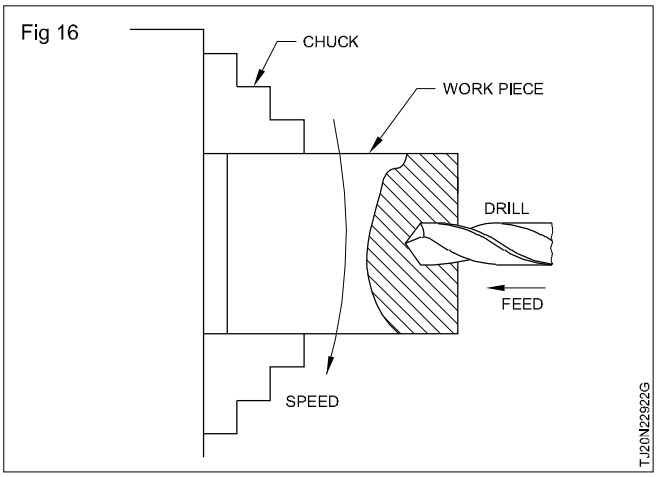

G85-Reaming Cycle (Fig 17)

Format: G85 X__ Z__ R__ F__

O0004;

N5 G28 U0 W0;

N10 T0101; (10 mm drill)

N15 G97 S250 M3;

N20 G00 X0.0 Z2.0 M08;

N25 G85 X0.0 Z-20.0 F0.05;

N30 G00 Z10.0 M09;

N35 G28 U0 W0 M05;

N40 M30;

Fig 17

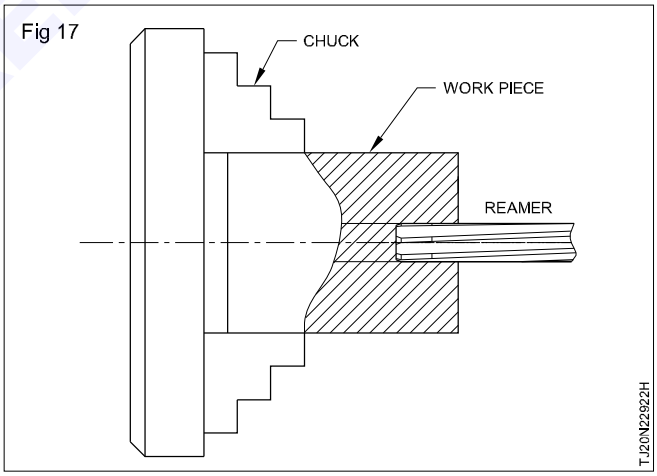

G76 -Thread Cutting Cycle (Fig 18)

Format: G76 P__ Q__ R__;

G76 X__ Z__ P__ Q__ F__;

P - □□ □□ □□

Thread angle

Chamfer angle

No. of finishing passes

Q - Minimum depth of cut in microns (Radial value)

R - Finishing depth of cut in microns

X - Thread diameter Minor dia

© NIMI NOT TO BE REPUBLISHED

Z - Thread length

P - Height of thread in microns

Q - First depth of cut in microns (Radial value)

F - Feed (Pitch value)

M 30 X 1.5

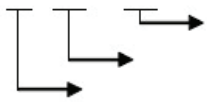

Pitch

Major diameter

Metric thread

Formula to calculate diameter

d = D - 2h

h = 0.649 x P (to find the height of the thread)

P- Pitch value

Fig 18

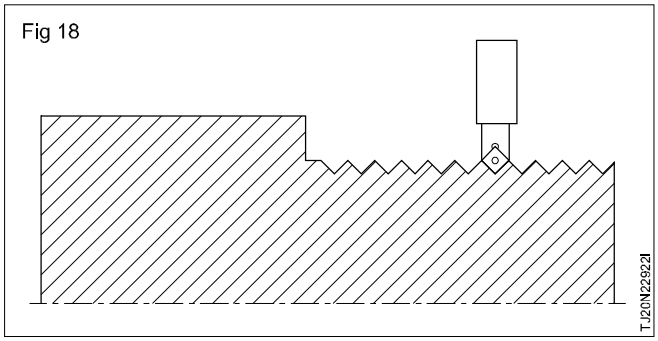

Example: 1 (Fig 19)

Using formula,

h = 0.649 x P

h = 0.649 x 2.5 = 1.6225

d = D - 2h = 40 - (2 x 1.6224)

d = 40 - 3.245 = **36.755**

O0005;

N5 G28 U0 W0;

N10 T0606;

N15 G97 S800 M03;

N20 G00 X42.0 Z5.0 M08;

N25 G76 P030060 Q150 R25;

N30 G76 X36.755 Z-50.0 P1623 Q500 F2.5;

N35 G00 X100.0 Z50.0 M09;

N40 G28 U0 W0 M05;

N45 M30;

Fig 19

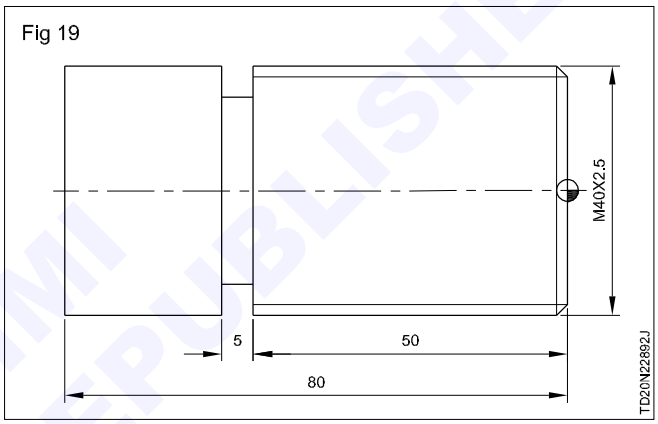

List of function and tape format for fanuc oi-T

Objectives : At the end of this exercise you shall be able to

- **list the 'G' codes for fanuc oi-T**
- **describe the formats for fanuc 'G' codes.**

Some functions cannot be added as options depending on the model. In the tables below, IP_:presents a combination of arbitrary axis addresses using X and Z.

x = 1st basic axis (X usually)

z = 2nd basic axis (Z usually)

Functions	Illustration	Tape format
Positioning (G00)	Start point 	G00 IP_;
Linear interpolation (G01)	Start point 	G01 IP_F_;

© NIMI NOT TO BE REPUBLISHED

Functions	Illustration	Tape format
Circular interpolation (G02, G03)	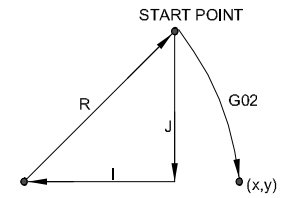 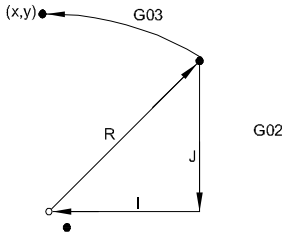 Start point	G18 {G02 / G03} X_Z_ {R / I_K_} F_;
Dwell (G04)		G04 {X / P} ;
Cylindrical interpolation		G07 IP _r_; Cylindrical interpolation mode G07 IP 0; Cylindrical interpolation mode cancel r: Radius of cylinder
Change of offsetvalue by program (G10)		Tool geometry offset value G10 P_X_Z_R_Q_; P = 1000+Geometry offset number Tool wear offset value G10 P_X_Z_R_Q_; P = Wear offset number
Polar coordinate interpolation (G12,1, G13, 1) (G112, G113)		G12,1 ; Polar coordinate interpolation mode G13,1 ; Polar coordinate interpolation mode Cancel
Plane selection (G18)		G18 ; ZpXp plane selection
Inch/metric conversion (G20, G21)		Inch input : G20 Metric input : G21
Stored stroke check 2,3 (G22, G23)	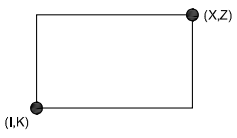	G22X_Z_I_K_ ; G23 ;
Reference position return check (G27)	Start position 	G27 IP_;
Reference position return (G28) 2nd reference position return (G30)	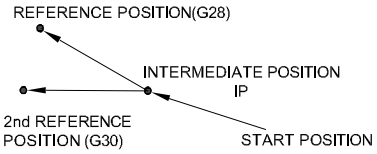	G28 IP_; G30 IP_;

© NIMI NOT TO BE REPUBLISHED

Functions	Illustration	Tape format
Skip fubction (G31)	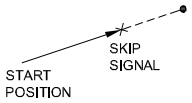	G31 IP_F_;
Thread cutting (G32)	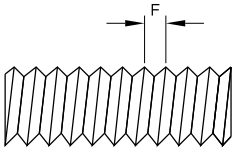	Equal lead thread cutting G32 IP_F_;
Cutter compensation (G40, G41, G42)	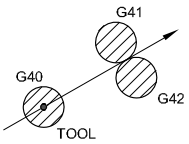	{G41 / G42} IP_; G40; Cancel
Coordinate system setting spindle speed setting (G50)	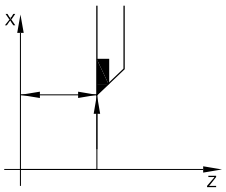	G50 IP_; Coordinate system setting G50 S_ ; Spindle speed setting
Workpiece coordinate system preset (G50.3)		G50.3 IP 0 ;
Local coordinate system (G52)	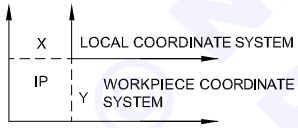	G52 IP _;
Selecting machine coordinate system (G53)		G53 IP_;
Selecting a workpiece coordinate system (G54 to G59)	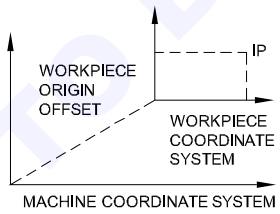	{G54 : G59} IP_;
Custom macre (G65, G66, G67)	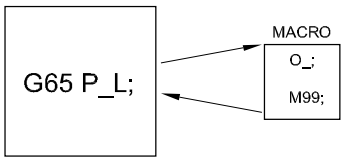	One-shot call G65 P_L_ <argument> ; P : Program number L : Repetition count G66 P _ L_ <argument> ; G67 ; Cancel
Canned cycle (G71 to G76) (G90, G92, G94)	Refer to II.13. Functions to simplify programming	N_G70 P_Q_; G71 U_R_; G71 P_Q_U_W_F_S_T_; G72 W_R_; G72 P_Q_U_W_F_S_T_; G73 U_W_R_; G73 P_Q_U_W_F_S_T_;

NOT TO BE REPUBLISHED © NIMI

Functions	Illustration	Tape format
		G74 R_; G74 X(u)_Z(w)_P_Q_R_F_; G75 R_; G75 X(u)_Z(w)_P_Q_R_F_; G76 P_Q_R_; G76 X(u)_Z(w)_P_Q_R_F_; {G90, G92} X_Z_I_F_; G94 X_Z_K_F_;
Constant surface speed control (G96/G97)	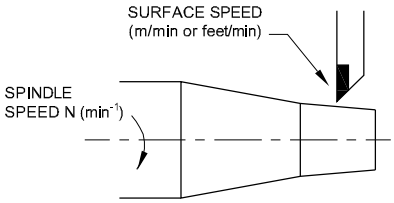	G96 S_ ;Starts constant surface speed control (Surface speed command) G97 S_ ;Constant surface speed is cancelled (Maximum spindle speed command)
Feed per minute Feed per revolution	mm/min inch/min mm/rev inch/rev	G94 F_; Feed per minute G95 F_; Feed per revolution
Absolute/incremental programming (when G code system A)		X_Z_C_ ; Absolute programming U_W_H_; Incremental programming (Identified by an address word specified with a G function such as G00 or G01)
Absolute/incremental programming (G90/G91) (during G code system B, C)		G90_; Absolute programming G91_; Incremental programming G90_ G91_; Used together
(G98/G99) (during G code system B,C)	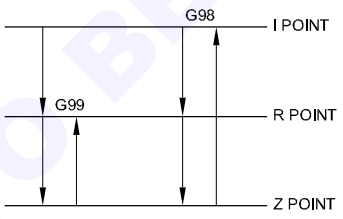	G98_; Initial point G99_; R Level

© NIMI NOT TO BE REPUBLISHED

Safety precautions

Objectives: At the end of this lesson you shall be able to
- **list the safety points related to the CNC machining centre**
- **brief the safety points related to the systems.**

Safety points related to CNC Machining centre

- Check machine operations
- Perform trial run using single block mad, feedrate override, or machine lock function by operating machine neither with tool as or workpiece rounted
- Thoroughly check the entered data, to avoid causing damage to workpiece/machine/injurey to operator.
- Check the feed rare intented for the operation with respect to machine capacity/specification
- Thoroughly check the direction and an out of compensation while using a tool compensation function.
- Do not change the factory set parameters
- Do not touch any of the keeps on the MDI panel untill the position display or alarm screen appear on the CNC unit.
- Do not fully depend on operator/programming manual, since CNC machine builder provide over all description, the functions/optional functions/some functions provided by machine based on request.
- Hence Thoroughly study/practice/operate machines.

Never attempt to machine a workpiece without first checking the operation of the machine. Before starting a production run, ensure that the machine is operating correctly by performing a trial run using, for example, the single block, feedrate override, or machine lock function or by operating the machine with neither a tool nor workpiece mounted. Failure to confirm the correct operation of the machine may result in the machine behaving unexpectedly, possibly causing damage to the workpiece and/or machine itself, or injury to the user.

Before operating the machine, thoroughly check the entered data. Operating the machine with incorrectly specified data may result in the machine behaving unexpectedly, possibly causing damage to the workpiece and/or machine itself, or injury to the user.

Ensure that the specified feedrate is appropriate for the intended operation. Generally, for each machine, there is a maximum allowable feedrate. The appropriate feedrate varies with the intended operation. Refer to the manual provided with the machine to determine the maximum allowable feedrate. If a machine is run at other than the correct speed, it may behave unexpectedly, possibly causing damage to the workpiece and/or machine itself, or injury to the user.

When using a tool compensation function, thoroughly check the direction and amount of compensation. Operating the machine with incorrectly specified data may result in the machine behaving unexpectedly, possibly causing damage to the workpiece and/or machine itself, or injury to the user.

The parameters for the CNC and PMC are factory–set. Usually, there is not need to change them. When, however, there is not alternative other than to change a parameter, ensure that you fully understand the function of the parameter before making any change. Failure to set a parameter correctly may result in the machine behaving unexpectedly, possibly causing damage to the workpiece and/or machine itself, or injury to the user.

Immediately after switching on the power, do not touch any of the keys on the MDI panel until the position display or alarm screen appears on the CNC unit. Some of the keys on the MDI panel are dedicated to maintenance or other special operations. Pressing any of these keys may place the CNC unit in other than its normal state. Starting the machine in this state may cause it to behave unexpectedly.

The operator's manual and programming manual supplied with a CNC unit provide an overall description of the machine's functions, including any optional functions. Note that the optional functions will vary from one machine model to another. Therefore, some functions described in the manuals may not actually be available for a particular model. Check the specification of the machine if in doubt.

Some functions may have been implemented at the request of the machine–tool builder. When using such functions, refer to the manual supplied by the machine–tool builder for details of their use and any related cautions.

Note: Programs, parameters, and macro variables are stored in nonvolatile memory in the CNC unit. Usually, they are retained even if the power is turned off. Such data may be deleted inadvertently, however, or it may prove necessary to delete all data from nonvolatile memory as part of error recovery.

To guard against the occurrence of the above, and assure quick restoration of deleted data, backup all vital data, and keep the backup copy in a safe place.

© NIMI Not to be republished

Machine and control specification

Objectives: At the end of this lesson you shall be able to
- **read the specification and compare with the machine**
- **interpret the fanuc control system specification.**

Machine specifications

Machine control specification is so important because it provides clear instructions about the Axis working range, machine precision, no. of tool station, spindle speeds, machine dimensions and the construction feature. A typical specification of a CNC vertical machining centre is given in Table_1.

Table 1

Description	Vertical machining centre	Horizontal machining centre
Number of Axis	3 axes	4 axes
Number of tools	20	36
Table dimensions	780x400 mm	500x500 mm
Maximum travel - x axis	575mm	725mm
Maximum travel - y axis	380 mm	560mm
Maximum travel - z axis	470mm	560mm
Spindle speed	60-8000rpm	40-4000rpm
Spindle taper	BT 40	BT 50
Power	7.0 kw	15.0 kw
Feed rate range	2-5000mm/min	1-5000mm/min
Rapid traverse rate	30 m/min(X,Y), 24 m/min(Z)	30 m/min(X,Y), 24 m/min(Z)
Maximum tool diameter	80mm	105mm
Maximum tool length	300mm	350mm
Maximum tool weight	6kg	10kg

Note: Above spec. for reference only. Varies according to machine builders

Example Specifications of a CNC System

1	Number of controlled axes	:	Two/Four/Eight, etc.
2	Interpolation	:	Linear/circular/parabolic or cubic/cylindrical
3	Resolution	:	Input resolution (feedback)
		:	Programming resolution
4	Feed rate	:	Feed/min

© NIMI NOT TO BE REPUBLISHED

	:	Feed/revolution
5 Rapid traverse rate	:	Feed rate override
	:	Feed/min
6 Operating modes	:	Manual/Automatic/MDI(editing)/Input/Output/ Machine data set-up/Incremental, etc.
7 Type of feedback	:	Digital (rotary encoders with train of pulses)
	:	Analog (transducers, etc.)
	:	Both
8 Part program handling	:	Number of characters which can be stored
	:	Part program input devices
	:	Output devices
	:	Editing of part program
9 Part programming	:	Through MDI
	:	Graphic simulation
	:	Blue print programming
	:	Background editing
	:	Menu driven programming
	:	Conversational programming
10 Compensations	:	Backlash
	:	Lead screw pitch error
	:	Temperature
	:	Cutter radius compensation
	:	Tool length compensation
11 Programmable logic controller	:	Built-in (integrated)/External
	:	Type of communication with NC
	:	Number of inputs, outputs, timers, counters and flags
	:	User memory
	:	Program organization
	:	Programming Languages
12 Thread cutting/Tapping	:	Types of threads that can be cut
13 Spindle control	:	Analog/Digital control
	:	Spindle orientation
	:	Spindle speed overrides
	:	RPM/min; constant surface speed
14 Other features	:	Inch/metric switchover
	:	Polar coordinate inputs
	:	Mirror imagin
	:	Scaling
	:	Coordinate rotation system
	:	Custom macros

© NIMI NOT TO BE REPUBLISHED

: Built-in fixed cycles

: Background communication

: Safe zone programming

: Built-in diagnostics, safety function, etc.

: Number of universal interfaces

: Number of active serial interfaces

: Direct numerical control interface

: Network interface capability

Machine control function

Objective: At the end of this lesson you shall be able to
- **state the functions of CNC machine controls.**

Machine control panel, machining centre

In general the control units there are two basic ompontents

1 Operational panel

2 Display screen

The operation panel and display screen are more are less same as CNC lathe but only difference is check. CNC lathe will have two are namely Y all and Z one where as machining centre will have minimum of 3 axes, namely X,Y and Z (Fig 1) other function and operations are similar. additional function may be added in latest controls.

Fig 1



T20N239321

NOT TO BE REPUBLISHED

Co-ordinate systems and points

Objective: At the end of this lesson you shall be able to
- **define different co-ordinates system used in CNC machining centres.**

Co-ordinate system and point

In geometry, a coordinate system is a system that uses one or more numbers, or coordinates, to uniquely determine the position of the points or other geometric elements with respect to a common base point.

Different co-ordinate system

Co-ordinates are specified in one of the following two co-ordinate systems.

1 Machine co-ordinate system

2 Work piece co-ordinate system

1 Machine co-ordinate system (M)

A coordinate system with a machine zero point set as its origin is referred to as a machine coordinate system

When a command is specified the position on a machine coordinate system, the tool moves to the position by rapid traverse. “G53” which is used to select a machine co-ordinate system. It is indicated as - M.(Fig 1)

Fig 1

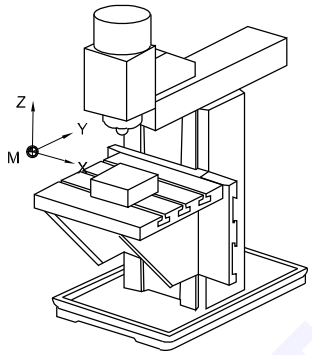

M MACHINE ZERO POINT

T J20N239411

2 Work piece co-ordinate system (W) (Fig 2)

A coordinate system used for machining a work piece is referred to as a work piece co-ordinate system. A machining program sets a work piece co-ordinate system. A set work piece co-ordinate system can be changed by shifting its origin. Program commands G54 to G59 can be used to select the work piece co-ordinate system.

Absolute and incremental co-ordinate

This given sketch explain the co-ordinate location in different quadrant with respect to common zero point (0,0). The value sign changes in different quadrant. It is shown in Fig 3)

There are two ways to command travels of the tool; the absolute programming, and the incremental programming.

Fig 2

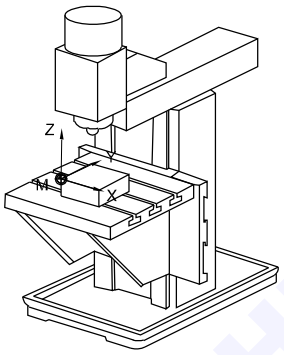

W WORK PART ZERO POINT

T J20N239412

Fig 3

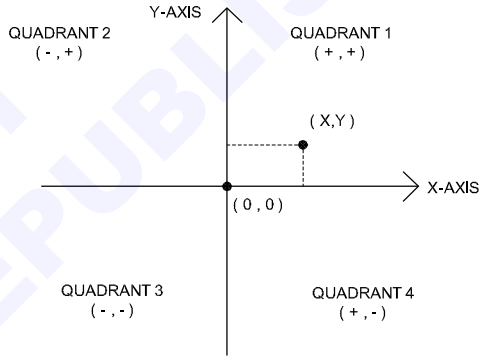

T J20N239413

In the absolute programming (G90), all coordinate value are from common base point is called zero point. In incremental programming (G91) the values are refer with previous position. There is no standard base point.

Absolute programming (G90) (Fig 4)

In absolute programming, all measurements are made from the parts origin. Any programmed co-ordinate has the absolute value in respect to the fixed zero point.

Fig 4

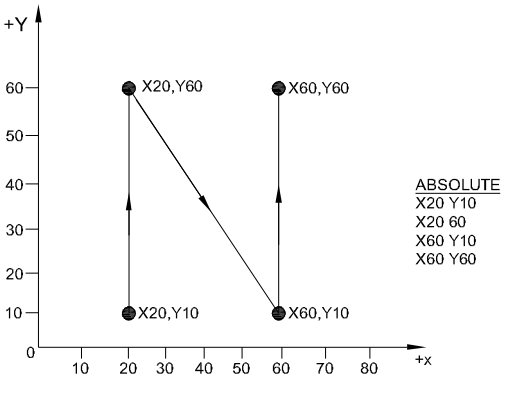

T J20N239414

© KIMI NOT TO BE REPUBLISHED

Example 1 (G90)

O0001 (ABS);

G90 G54

X20.0 Y10.0;

X20.0 Y60.0;

Incremental programming (G91) (Fig 5)

Incremental programming every measurement refers to a previously dimensioned position (point-to-point). Incremental dimensions are the distances between two adjacent points.

Example 2 (G91)

O0002 (INC);

G91 G54

X20.0 Y10.0

X0.0 Y50.0;

X40.0 Y-50.0;

X0.0 Y50.0

Fig 5

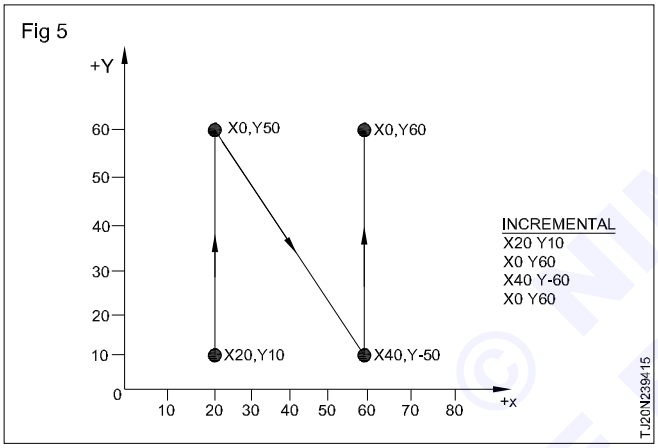

Vertical machining centre

The diagrams of vertical milling machine is shown (Fig 6). It has 3 axis namely X, Y Z. Axis Z is called tooling axis. It moves up (+) and down (-) the sign indicates the direction. Axis X & Y are positioning axis for the specific task. All the axis movements are controlled by servo motor.

Fig 6

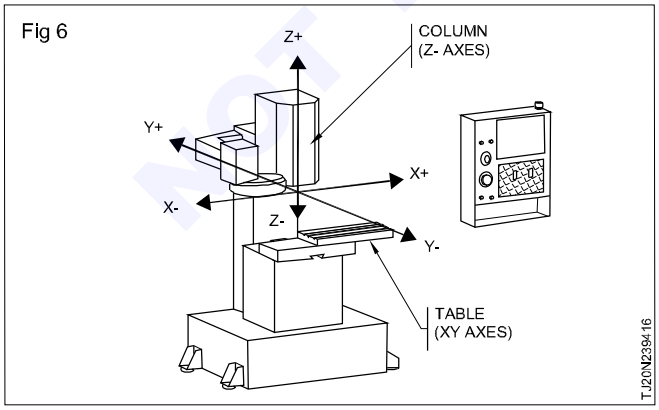

Horizontal machining centre (Fig 7)

The horizontal machining centre diagram is shown (Fig 7). It has 3 axis namely X,Y Z. Axis is called tooling axis. It moves from (-) and back (+) the sign indicates the direction. Axis X & Y are positioning axis for the specific task. Axis B is rotational axis. All the axis movements are controlled by servo motor.

Fig 7

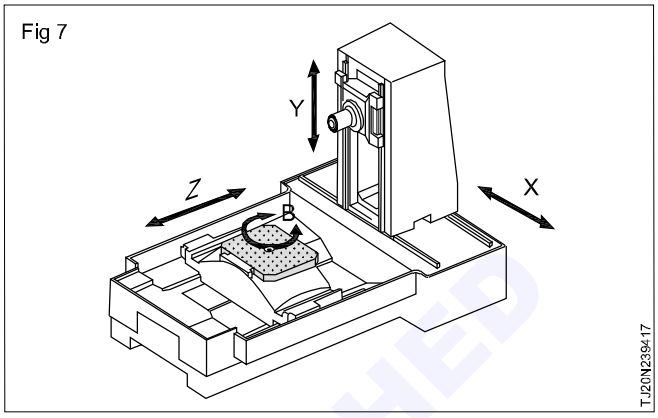

All the machine work table traverses are designed in such a way that they are able to traverse to the target points in coordinate system only. The following are the movements.

Work table to the right or left (X axis)

Work table upward or down ward (Y axis)

Spindle head forward or backward (Z axis)

Similarly, the rotary movements about the axis of rotation are defined as follows.

Rotation about X axis is A axis.

Rotation about Y axis is B axis.

Rotation about Z axis is C axis.

When a machine slide moves, we always have two alternative i.e. either the tool moves with the spindle head or the work piece moves with the machine table. Which of the two performs the movement, depends on the design of the machine. In CNC concept of relative tool motion makes the programming much simpler, because the programmer does not always have to reconsider which of the two work pieces or tool is actually moving. We can now give each direction of traverse of the machine a name.

A relative tool motion to the right	X+
A relative tool motion to the left	X-
A relative tool motion to the rear	Z+
A relative tool motion to the front	Z-
A relative tool motion to the downward	Y+
A relative tool motion to the upward	Y-

© NIMI NOT TO BE REPUBLISHED

Types of machining centre and its axes

Objectives: At the end of this lesson you shall be able to
- **state the different types of CNC milling machine / machining centre**
- **explain the axis movement of CNC machines.**

Types of CNC milling machine / machining centre

Milling machines can divided into three categories

1 by the no of axes (two, three or more)

2 by the orientation of axes (vertical or horizontal)

3 by the presence or absence of a tool changer.

The spindle motion is up and down in vertical milling/ machining centre.

The spindle motion is in and out in horizontal milling/ machining centre.

These machines are capable to perform the following operations:

Drilling, Reaming, boring, tapping, profiling, thread cutting and many other operations.

ATC: Automatic Tool changer.

APC: Automatic pallet changer

CNC: Computer Numerical Control

With the above advanced featured built in milling machines become the new breed of machine tools called machining centres.

Machine axes

The machining centres are provided with minimum threee axes of 'X','Y'&'Z' axis of they have fourth axis machines become more flexible i.e the fourthy axis 'A' for vertical model and 'B' of horizontal model. The machine with fine or more axes is of higher level of capacity.

In aircraft industry 5 axes profile milling machine is used for complex shapes and reach cavaties and various angles.

Meaning of half / full axis in NC language (what is half / fall axis machine)

A four axis vertical machine has X,Y,Z as primary axes and indexing table designated as 'A' axis which can position but cannot rotate simultnesously is called 3 1/2 axes machine. If the maching equipped with full rotating table, simultaniously then it is called four axis machine tool.

In the milling systems, three most common machine tools are

CNC vertical machining centre - VMC

CNC horizontal machining centre - HMC

CNC horizontal boring mill

Vertical Machining Centres (Fig 1)

VMC is for flat type of work where the machining is done on only one face of the part in single set up.

An optional fourth axis can be provided by mounting rotary can the main table either vertically or horizontally depending on the desired results and the model type.

In the combination with a tailstock (usually supplied) the fourth axis in the vertical configuration can be used for machining long parts. That need support at both ends.

For programming two systems followed. One programming always takes place form the view point of the spindle, not the operators eye. View is as if looking straight down at 90° towards the machine take for development of the tool motion.

Two various markers located some where in the machine show the positive and negative motion of the machine axes. For programming these markers should be ingnored. The programming directions are exactly the opposite of the markers on the machine tool.

Fig 1

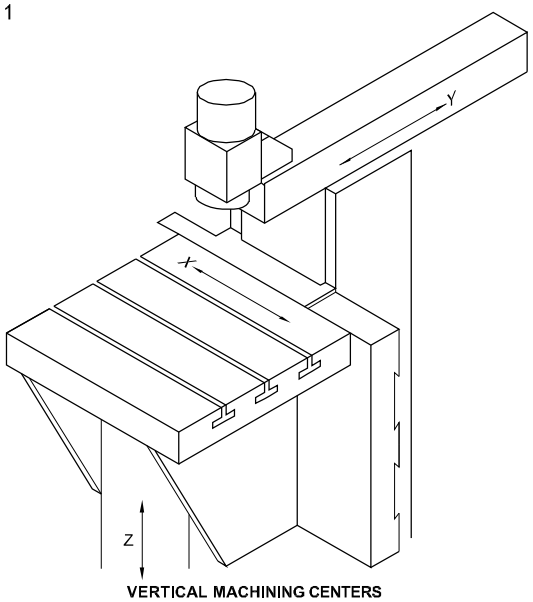

VERTICAL MACHINING CENTERS

© NIMI NOT TO BE REPUBLISHED

Horizontal machining centers (Fig 2)

Horizontal CNC machining centres are also categorized as multi - tool and versatile machines, and are used for cubical parts, where the majority of machining has to be done on more than one face in a single setup.

Fig 2

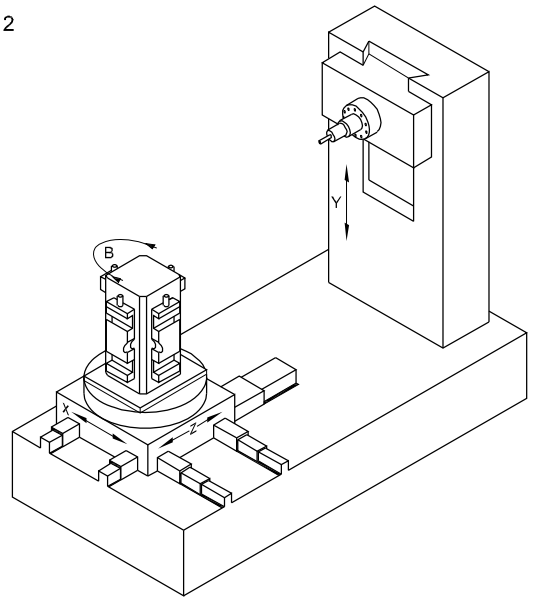

HMC SHOWING THE AXIS DIRECTIONS

T.I20N239512

There are many applications in this area. Common examples are large parts, such as pump housings, gear cases, manifolds, engine blocks and so on. Horizontal machining centres always include a special indexing table and are typically equipped with a pallet changer and other features.

Axis - nomenclature

The basic designation of the axis (i.e.), in Fig 3 which is X, Y, Z, is decided by the right hand thumb rule and the main spindle axis. The thumb indicates X - axis, fore finger indicates Y - axis and the middle finger indicates Z - axis.

Fig 3

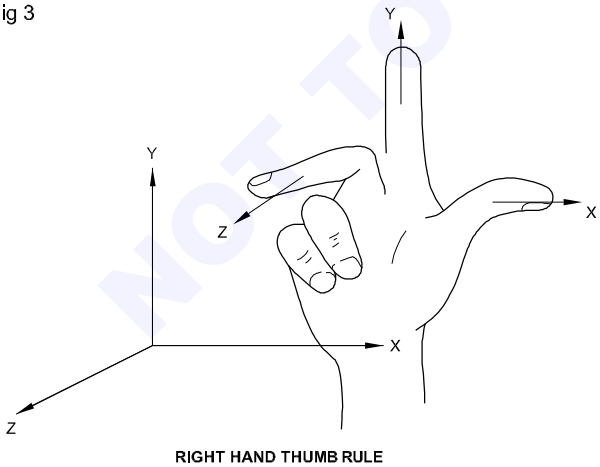

RIGHT HAND THUMB RULE

T.I20N239513

Auxillary axes on NC machine

Apart from each side movement axes on the machine, some other auxillary axes can exist. E.g. Rotary table. This rotary table axis is designed as A axis if it is parallel to X direction. Similarly B and C axes for Y and Z respectively.

Right hand rule

The rotary movements about X, Y and Z are designated as A, B and C respectively. The right hand rule is used to definite the positive direction of the coordinate axes as per the following Fig 4.

Fig 4

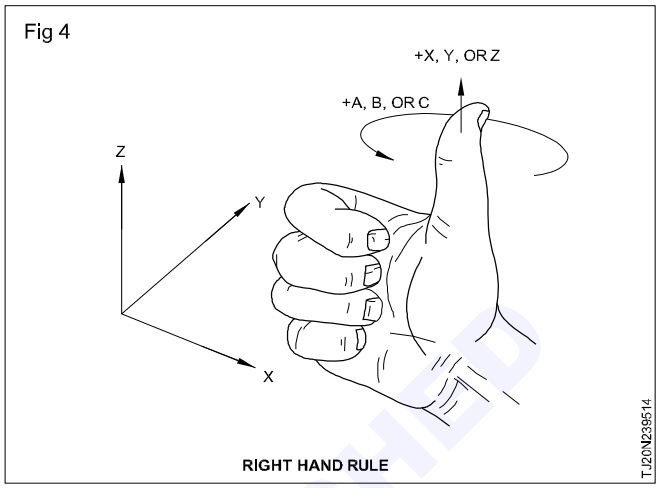

RIGHT HAND RULE

T.I20N239514

Z - axis (Fig 5)

The axis of the main (i.e. principle) machine spindle, whether it be the axis of the tool spindle or the axis about which the work piece rotates, is denoted as the Z axis. On machine tools, which do not possess principle spindle (e.g. planning machines) the Z - axis is perpendicular to the work holding surface.

X - axis

The X - axis is always horizontal, parallel to the work holding surface and perpendicular to the z - axis.

Y - axis

The Y - axis is perpendicular to both Z and X axis.

Fig 5

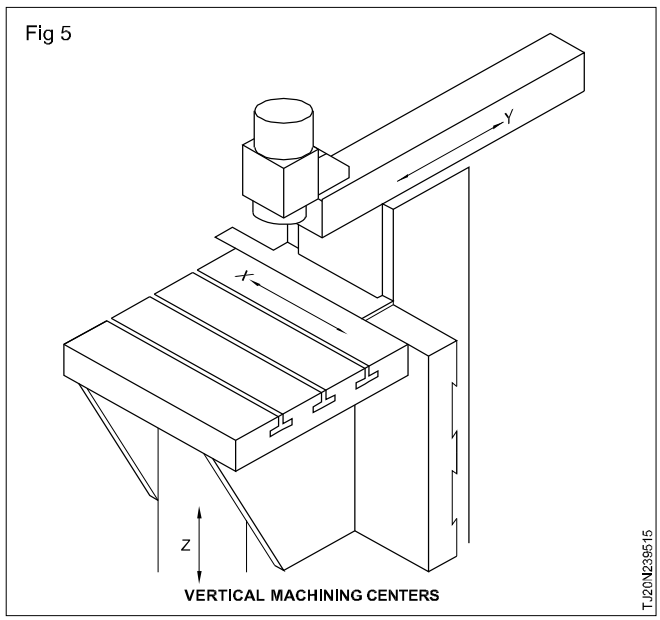

VERTICAL MACHINING CENTERS

T.I20N239515

Milling tool coordinate system (Fig 6)

Classification of machines.

CNC machines can be classified into various ways,

NOT TO BE REPUBLISHED © TNAU

Fig 6

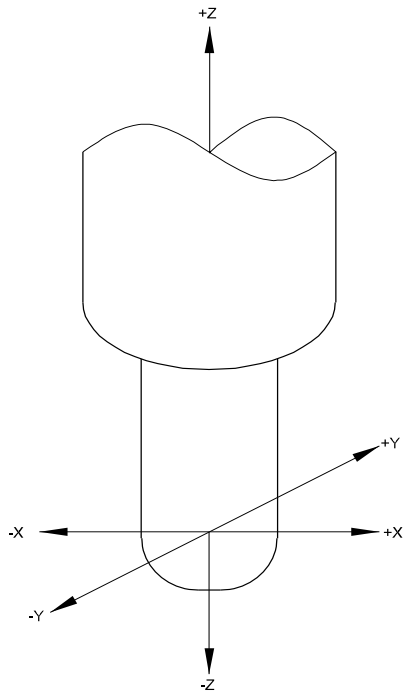

MILLING TOOL COORDINATE SYSTEM

a) According to no.of axis

CNC machine can be classified as

2 axis machine

3 axis machine

4 axis machine

It should be noted that each axis has it own drive motor.

b) According to CNC system

There are three types of CNC systems based on their capability in providing feed in different axes.

1 Point -to- point control

2 Straight cut control

3 Contouring control

Point-to-point control

Machines with point-to-point control provide only one feed axis while the other two axes can perform only rapid motion. Machines with point-to-points control are suited only for drilling operations. (Fig 7)

Fig 7

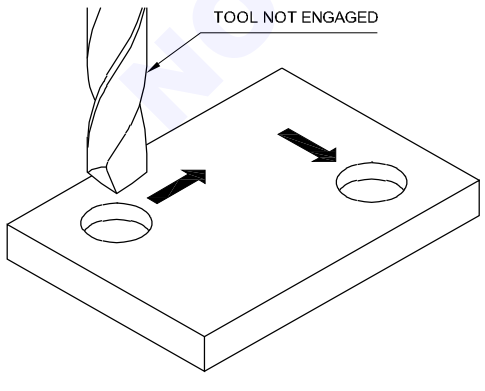

POINT TO POINT CONTROL

Straight cut control

The system provides feed motion in two axes (but not simultaneously) and hence their capability is limited to performing milling either along X axis or along Y axis. (Fig 8)

Fig 8

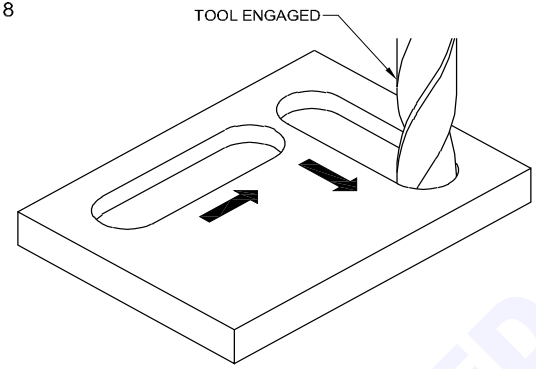

STRAIGHT CUT CONTROL

Contouring control

This can provide feed control in 3 axes. They are also capable of providing simultaneous feed in 2 or 3 axis.

Milling machine with contouring control can mill contours made up of straight lines and arc/circular elements.. Depending on the number of axes that can be simultaneously fed, contouring controls are further classified as 2D control, 2 1/2D control and 3D control.

i 2D control

Machines with 2D control can be simultaneous feed only in two of the 3 axes. They can mill only contours with constant depth that too in just one plane (X-Y) (Fig 9 & 10)

Fig 9

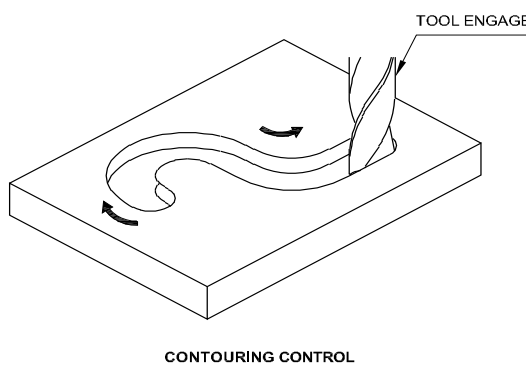

CONTOURING CONTROL

Fig 10

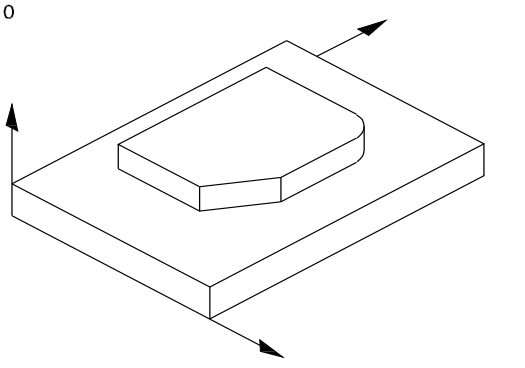

2-D CONTOURING CONTROL

© NIMI NOT TO BE REPUBLISHED

ii 2 1/2D control

Machines with 2 1/2D control can have simultaneous feed of any of the two axis X-Y, X-Z,Y,Z and, hence they can mill contours (of constant depth) in any one of the 3 plances. (Figs 11 & 12)

Fig 11

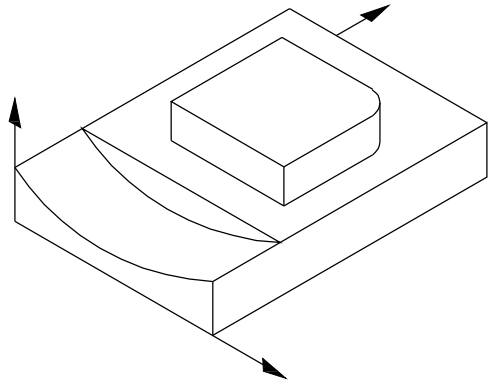

$2\frac{1}{2}$-D CONTOURING CONTROL

TJ20N23961B

Fig 12

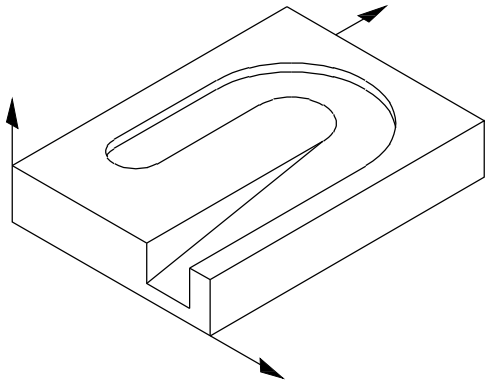

3-D CONTOURING CONTROL

TJ20N23951C

Programming

Objectives: At the end of this lesson you shall be able to

- **state the method of entering data to a CNC machine**
- **state various alpha numerical commands**
- **explain a programme block**
- **state tool path checking through simulation.**

A CNC program is a step-by-step instruction that tell the machine as to what action it has to take for machining a part.

Programme are initially written on paper using codes consisting of alphabets and numbers.

Before we can machine the part, the completed programme has to be fed into the memory of the machine computer and this can be done in different ways.

But the most easily available method is to enter the codes direct into the machine using the keys/buttons provided on the control panel.

Data entering

Data entering can be done in 2 ways:

By key board typing on the CNC milling machine (Fig 1)

Fig 1

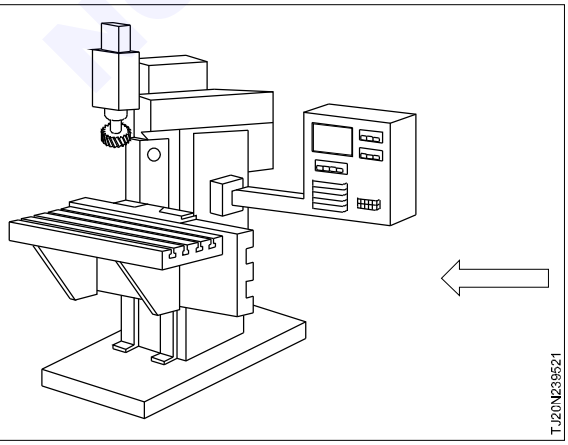

TJ20N239521

Entered data will be stored in memory CPU

Programme codes

The alpha numeric codes used for programme writing are. in a way, machine-dependent because the codes may vary from machine to machine. The codes pertaining to a particular make of machine are available in the machine manual and it should be throughly studied before writing/ reading a programme.

However, ISO standards are available for CNC programming unless otherwise stated, all programming codes discussed in this book will follow ISO codes/ Sinumeric system.

Few codes are,

G00

G01

M1

M2

T2

F90 etc.

Programme block and programme word

A line in the programme is called a block and the individual codes in the blocks are called programme words. The alphapet in these words are called address letters.

NOT TO BE REPUBLISHED © NIMI

Example

N1 G00 X100 Y10 Z20

Block structure

The term block structure/format refers to the rules for writing a programme block. In otherwords it refers to the essential programme words/codes that should be written along with certain commands.

The first word of any block is the block identification number and they are formed by the letter N.

Thus N1, N2, N10, N20 etc are block numbers and they do not carry any specific instructions to the machine.

Block numbers can be written serially (N1, N2, N3, N4, etc) or in suitable increments like N10, N20, N30, etc)

Layout of a CNC-Program

A CNC-Program, also known as part program, consists of a logical sequence of commands, which are executed step-by-step the control unit after the program has been started.

Each program is compiled and stored under a program name in the control unit. The name can contain letters as well as numbers.

A block starts with a block number followed by the commands.

Each command consists of command words, which in turn consist of an address letter (A-Z) and an associated numerical value. Both upper or lower case characters are permissible)

Program layout

The block number is a program-technical assignment which is not evaluated by the control unit as a command. It is usually programmed to go up in steps of 10 and serves only the user for better oversight. It has no effect on the program execution.

The geometrical data include all instructions that clearly define mathematically the motion of the tool or the axes.

The technological data are used for instance to activate the required tool and to re-select the necessary cutting parameters feed rate and spindle speed. Miscellaneous functions can control for example such things as direction of rotation and auxiliary appliances. (Table 1)

Programming example

.....

N80 T1; Roughing tool

N90 M6

N100 G54 F0.2 S180 M4

N110 G00 X20 Y0Z2 D1

N120 ....

In order to improve the oversight within a program commentaries can be optionally added at the end of a block. These must be preceded by a semicolon(;). Any characters that follow thereafter will not be taken account of by the control unit..

Simulation

Mechanical parts with free form surfaces used in various industries (moulds, automotive, aerospace, etc...) are machined on multi-axis CNC milling machines because of their highly complex geometric shapes. Toolpaths for obtaining these parts are generated by taking into account several parameters (cutting conditions, tools shapes, surface models, etc...)

The final shape of the part is obtained in three operations:roughing, semi-finishing and finishing. Before real machining. it is essential to simulate virtually the machining to verify the toolpaths geometry of the finished part and to predict physical factors that are necessary to optimize the cutting parameters.

During simulation it is necessary to lock all the machine axis and auxiliary functions.

Table 1

Block Nr...	Departure information(Geometrical data)							Switching information(Technological data)			
	Auxillary command	Co-ordinate axes			Interpolation parameter			Feed	Speed	Tool	Misc. function
N	G	X	Y	Z	I	J	K	F	S	T	M

© NIMI NOT TO BE PUBLISHED

Address codes

Objectives: At the end of this lesson you shall be able to
- **describe the list of address characters applied in CNC machine tools**
- **explain the features of the address characters.**

The lists of address characters as per DIN 66025 are as follows:

Word address	Description
A	Rotation about X axis
B	Rotation about Y axis
C	Rotation about Z axis
D & E	Rotation about addition axes
F	Feed rate
G	Preparatory function
H	Tool height offset
I	Circular interpolation parameter or thread pitch parallel to X axis
J	Circular interpolation parameter or thread pitch parallel to Y axis
K	Circular interpolation parameter or thread pitch parallel to Z axis
L	Number of repetitions
M	Miscellaneous function
N	Block number
O	Program number
P,Q &R	Third movement parallel to X,Y and Z axes respectively
S	Spindle speed
T	Tool function
U,V &W	Second movement parallel to X, Y and Z axes
X	Movement in X axis
Y	Movement in Y axis
Z	Movement in Z axis

The word address format is based on a combination of one letter or more digits.

Character,

A smallest unit in CNC programming. It can be a letter, digit or symbol. Example : X,Y,Z, 1-9,+,-, etc.

X	-	3	.	0

Word,

Word is a combination of character. It consists of a capital letter, followed by a number, and sometime symbol, depending on the code. Example : N5, G01, F100, G91

N	5	G	0	1	Z	-	3	2	9	.	5

Block,

Block is a multiple of words seperated by end of block, otherwise each line in the programme is a block.

N	1	0	G	0	2	X	3	9	.	7	Z	-	8	7	.	R	.	2	F	.	5

Alphabetical address codes

The following is a list of the address codes used in programming the HAAS milling machines.

A → Fourth axis rotary motion

The A address character is used to specify motion for the optional fourth, A axis.

B → Fifth axis rotary motion

The B address character is used to specify motion for the optional fifth, B axis.

C → Auxiliary external rotary axis

The C address character is used to specify motion for the optional external sixth, C axis.

D → Tool diameter offset selection

The D address character is used to select the tool diameter or radius used for cutter compensation. The number following must be between 0 and 200. The Dnn selects that number offset register that is in the offset

© NIMI NOT TO BE REPUBLISHED

display, which contains the tool diameter/radius offset amount when using cutter compensation (G41 or G42). D00 will cancel cutter compensation so that the tool size is zero and it will cancel any previously defined Dnn.

E → Engraving feed rate or continuous accuracy

The E address character is used, with G187, to select the accuracy required when cutting a corner during high speed machining operations. The range of values possible is 0.0001 to 0.25 for the E code.

F → Feed rate

The F address character is used to select the feed rate applied to any interpolation functions, including pocket milling and canned cycles. It is either in inches per minute with four fractional positions or mm per minute with three fractional positions. (It is recommended that the programmer always use a decimal point)

G → Preparatory functions (G codes)

The G address character is used to specify the type of operation to occur in the block containing the G code. The G is followed by a two or three digit number between 0 and 187. Each G code defined in this control is part of a group of G codes. The group 0 codes are non model that is they specify a function applicable to this block only and do not affect other blocks. The other groups are model and the specification of one code in the group cancels the previous code applicable from that group. A model G code applies to all subsequent blocks so those blocks do not need to re - specify the same G code. More than one G code can be placed in a block in order to specify all of the setup conditions for an operation.

H → Tool length offset selection

The H address character is used to select the tool length offset entry from the offsets memory. The H is followed by a two digit number between 0 and 200. H0 will clear any tool length offset and Hnn will use the tool length entered in on 'n' from the offset display. You must select either G43 or G44 to activate a tool length (H) offsets. The G49 command is the default condition and this command will clear any tool length offsets. A G28, M30 or pressing reset will also cancel tool length offsets.

I → Circular interpolation or canned cycle data

The I address character is used to specify data for either canned cycles or circular motions. It is defined in inches with four fractional positions or mm with three fractional positions.

J → Circular interpolation or canned cycle data

The J address character is used to specify data for either canned cycles or circular motions. It is defined in inches with four fractional positions or mm with three fractional positions.

K → Circular interpolation or canned cycle data

The K address character is used to specify data for either canned cycles or circular motions. It is defined in inches with four fractional positions or mm with three fractional positions.

L → Loop count to repeat a command line

The L address character is used to specify a repeat count for some canned cycles and auxiliary functions. It is followed by a number between 0 and 99999.

M → Code miscellaneous functions

The M address character is used to specify an M code. These codes are used to control miscellaneous machine functions. Note that only one M code is allowed per block in a CNC program and all M codes are performed secondary in a block.

N → Number of block

The N address character is entirely optional. It can be used to identify or number each block of a program. It is followed by a number between 0 and 99999. The M97 functions needs to reference an N line number.

O → Program number (Program name in parenthesis)

The O address character is used to identify a program. It is followed by a number between 0 and 99999. A program saved in memory always has a 0nnnnn identification in the first block. Altering the 0nnnnn in the first block causes the program to be renumbered. If you enter a program name (program text name) between parentheses in the first three lines of a program, that program name will also be seen in your list of programs. You can have up to 500 program numbers (200 programs on an older machine) in your list of programs. You can delete a program number from the list prog display, by cursor selecting the program, and pressing the erase prog key. You can also delete a program in the advanced editor using the menu item delete program from list.

P → Delay of time or M98 program number call or M97sequence number call

The P address character is used for either a dwell time in seconds with some canned cycles or in a G04, or P is used as a program number reference for an M98, or a program sequence number reference for an M97. The P value is a positive number without decimal point up to 99999 when used with an M98 or M97. When used as a dwell time, it may be a positive decimal number between 0.001 and 1000.0 in seconds.

Q → Canned cycle optional data

The Q address character is used in canned cycles and is always a positive number in mm between 0.001 mm to 1.0 mm.

R → Circular interpolation or canned cycle data

The R address character is used in canned cycles or circular interpolation. It's either in inches with four fractional positions or mm with three fractional positions. It is followed by number in inches or metric. It's usually used to define the reference plane for canned cycles.

© NIMI NOT TO BE REPUBLISHED

S → Spindle speed command

The S address character is used to specify the spindle speed in conjunction with M41 and M42. The S is followed by an unsigned number between 1 - 99999. The S command doesn't turn the spindle ON or OFF; it only sets the desired speed. If a gear change is required in order to set the commanded speed, this command will cause a gear change to occur. Even if the spindle is stopped. If spindle is running, a gear change operation will occur and the spindle will start running at the new speed.

T → Tool selection code

The T address character is used to select the tool for the next tool change. The number following must be a positive number between 1 and (20) the number in parameter 65. It does not cause the tool change operation to occur. The Tnn may be placed in the same block that starts tool change (M06 or M16) or in any previous block.

U → Auxiliary external linear axis

The U address character is used to specify motion for the optional external linear, U - axis.

V → Auxiliary external linear axis

The V address character is used to specify motion for the optional external linear V - axis.

W → Auxiliary external linear axis

The W address character is used to specify motion for the optional external linear, W - axis.

X → Linear X - axis motion

The X address character is used to specify motion for the X - axis. It specifies a position or distance along the X - axis. It is either in inches with four fractional positions or mm with three fractional positions. It is followed by a singed number in inches or metric. If no decimal point is entered the last digit is assumed to be 1/10000 inches or 1/1000 mm.

Y → Linear Y - axis motion

The Y address character is used to specify motion for the Y- axis. It specifies a position or distance along the Y - axis. It is either in inches with four fractional positions or mm with three fractional positions. It is followed by a signed number in inches or metric. If no decimal point is entered, the last digit is assumed to be 1/10000 inches or 1/1000mm.

Z → Linear Z - axis motion

The Z address character is used to specify motion for the Z - axis. It specifies a position or distance along the Z - axis. It is either in inches with four fractional positions or mm with three fractional positions. It is followed by a signed number in inches or metric. If no decimal point is entered, the last digit is assumed to be 1/10000 inches or 1/1000 mm.

Canned cycle

Objectives: At the end of this lesson you shall be able to
- **state what is canned cycle**
- **list the different types of canned cycles, and their function.**

In canned cycle frequently used machining operations are specified with a G function in a single block. Canned cycles made easier for the programmer to create short program.

The different types of canned cycles are listed in table 1.

Table 1

Canned cycle used in OMC

G-code	Application	Z-direction	Operation at the bottom of the hole	Retraction in Z direction
G73	High speed peck drilling Cycle	Intermittent feed	Dwell-spindle rotates CW spindle orientation Tool tip moved opposite to cutting & retracted	Feed
G76	Fine boring	Feed	------	-----
G80	Canceling of G81-G89 Cycles	-----	------	-----
G81	Center/spot drilling	Feed	------	-----
G82	Counter bore/counter sink	Feed	Dwell	Rapid traverse
G83	Peck/deep hole drilling	Intermittent feed	------	Rapid traverse
G84	Tapping cycle	Feed	Dwell spindle CW	Feed

© NIMI NOT TO BE REPUBLISHED

G85	Boring Cycle	Feed	------	Feed
G86	Boring cycle	Feed	Spindle stop	Rapid traverse
G87	Back boring cycle	Feed	Spindle CW	Rapid traverse
G88	Boring cycle	Feed	Dwell-spindle stop	Manual retract
G89	Boring	Feed	Dwell	Feed

A canned cycle consists of six operations only, shown in Fig 1. They are

Operation 1 - Positioning of x, y, x.

Operation 2 - Rapid position up-to R level.

Operation 3 - Hole machining.

Operation 4 - Operation at the bottom of a hole.

Operation 5 - Return to R point level.

Operation 6 - Rapid traverse to the initial point.

Important restrictions

1 Drilling is not performed when cycle call block does not contain X,Y,Z.R or any other axis.

2 Specify Q and/or R in blocks that perform drilling. If they are specified in a block that does not contain drilling they cannot be stored as modal data,.

3 In a cycle call block do not specify 01 Group G codes(G00 to G03). This will cancel the canned cycle G-codes.

4 In the canned cycle mode tool offsets are IGNORED.

5 The canned cycle call should be cancelled after the last drill point preferably with reference point return.

Fig 1

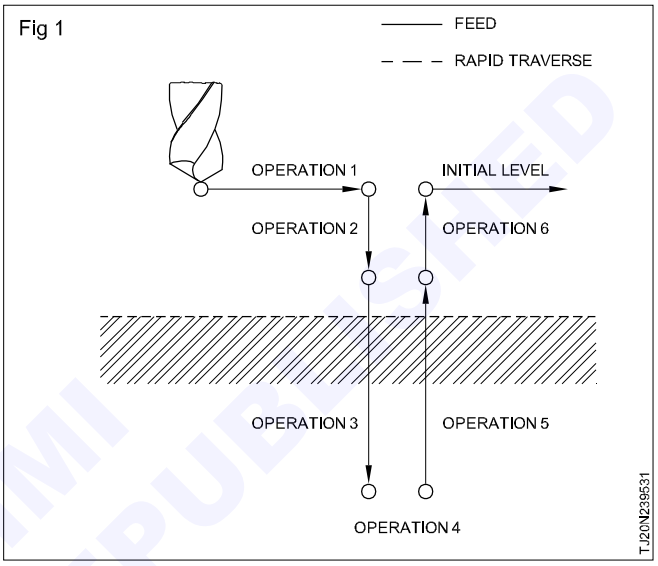

Cutter radius compensation (CRC)

Objectives: At the end of this lesson you shall be able to
- **state the significance of the term CRC**
- **explain the use of codes G42, G41 and G40.**

Usually the tool reference point being at the centre of the cutter, it will be the centre of the cutter that moves along the programmed path. But in a profiling operation, it is the periphery of the cutter that should travel along the programmed path and it is possible only if the centre of the cutter offsets itself from the programmed path by a distance equal to the cutter radius.

The term CRC signifies that the centre of the cutter should take a path away from the programmed path by a distance equal to the radius of the cutter. Such deviated path taken by the cutter centre is called compensated path. (Fig 1)

CRC commands (G41 and G42)

These commands instruct the control that the cutter centre should take a compensated path. These commands can be effective only if the control knows the radius of the cutter. For this purpose the radius of the cutter is stored in the tool data memory along with the length of the cutter. In the programme tool data memory is referred to by the D command.

Fig 1

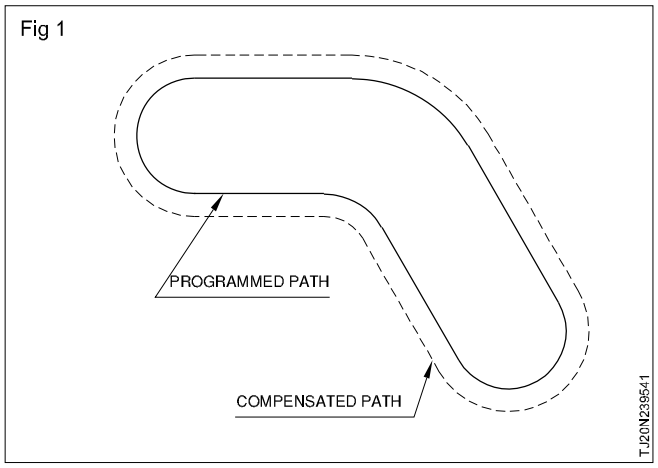

In motion programme the command G41 or G42 is put in the block that takes the tool to the starting point of the profile. (Fig 2)

In Fig 2, the starting point of profile is marked ‘S’ and its X, Y coordinates are 40 and 40.

© NIMI NOT TO BE REPUBLISHED

Fig 2

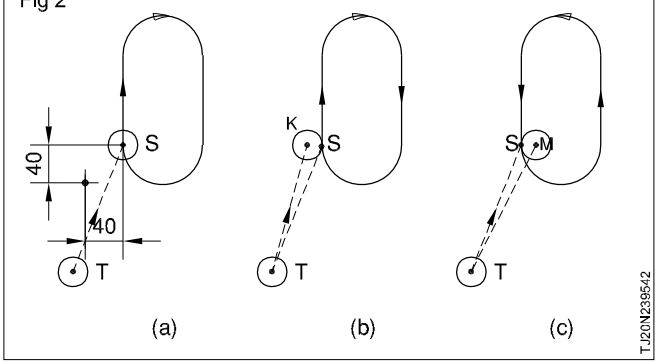

Difference between G41 and G42

If we write a block as 'G00 x 40 Y40' without either G41 and G42, the tool takes the path TS (Fig 2a) and the cutter will reach the point S, so that its centre coincides with S.

But if we add G41 in the block and write the block as G00 G41 x 40 Y40, the tool will take the path TK (Fig 2b) in such a way that the tool is on the left side of the profile with its periphery touching the point 'S'. Here TK is the compensated path.

If we write the block with G42 in place of G41, (G00 G42 X60 Y40) the compensated path will be TM such that the tool will be on the right side of the profile. (Fig 2C)

It may then be concluded that code G41 makes the compensated path to the left side while G42 makes the compensated path to the right side of the programmed path. The left/right has its reference to the direction of the cutter path. (See arrows in Fig 2a,b & c).

Cancellation of CRC G40

Once the command G41 or G42 is used the cutter will continue to take a compensated path. But when we want the cutter centre to revert back to the original programmed path the effect of G41/G42 has to be cancelled and this is done by the command G40.

Programming examples and 'G' code format

Objectives: At the end of this lesson you shall be able to
- **prepare the programme for the given component using G and M codes**
- **brief function of each codes**
- **explain the drilling cycle structure.**

Programming example (Fig 1)

Fig 1

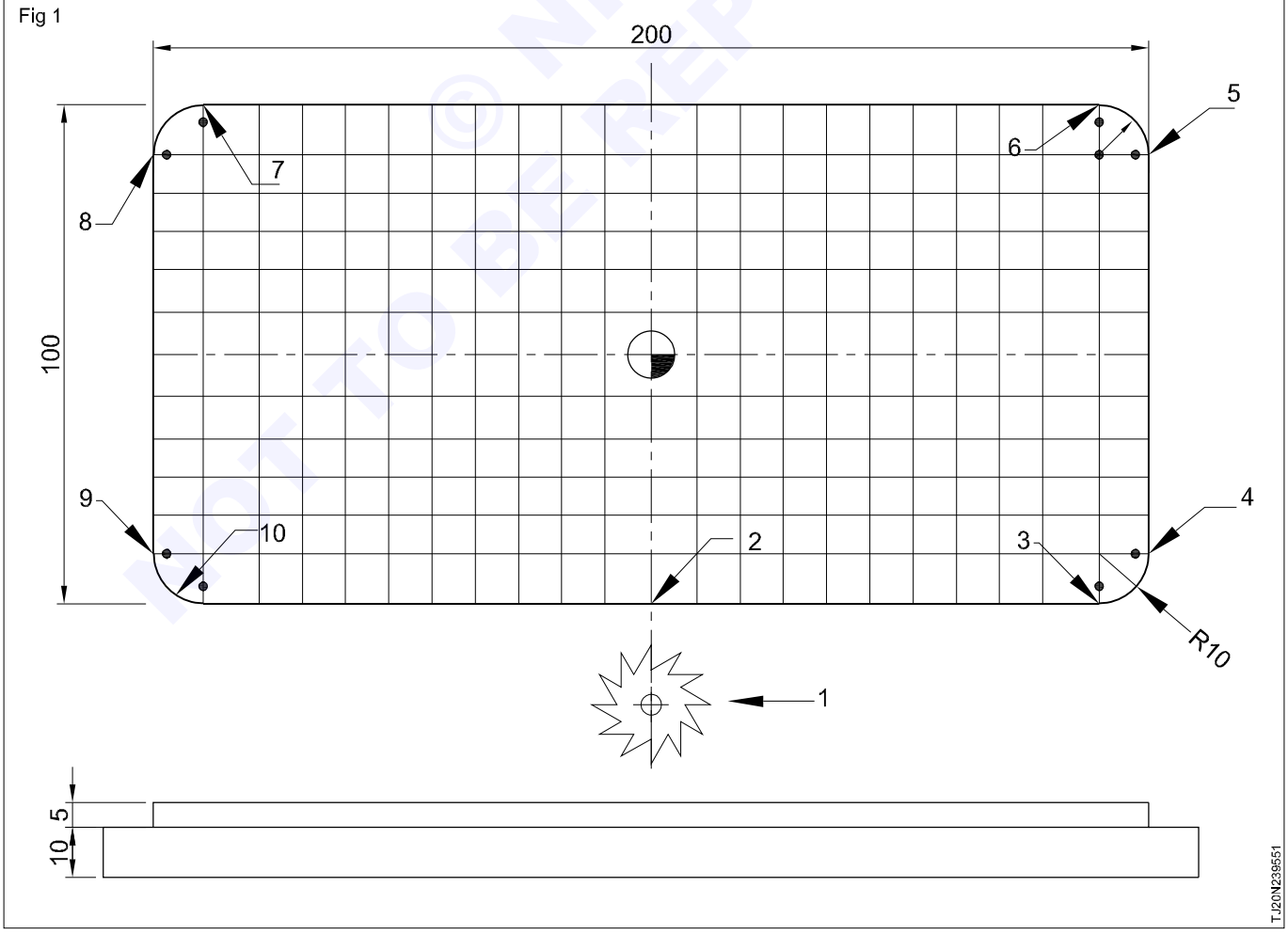

© NIMI NOT TO BE REPUBLISHED

Material : 200x100x15 mm Aluminium Plate.

Program Notes

1 Move zero point centre of the job (x,y axis).

Material : 200x100x15 mm Aluminium Plate.

Program Notes

1 Move zero point centre of the job (x,y axis).

2 Programs are absolute and incremental co-ordinate system.

3 Cutting tool Ø22.0 flat end mill a rule right hand helix.

4 Machining job by counter clock wise direction.

5 Cutter radius compensation used.

1111 - Program number

N1 G00 G91 G21 G49 G80 G28 Z0

N1-Block Number

G00-Rarid Positioning

G91-Incremental co-ordinates system

G21-Metric (mm)

G49-Tool length Compensation Cancel

G80-Canned Cycle Cancel

G28-Return to reference position

Z0-Return to reference position z-axis

N2 T01 M06

T01- tool number 1 (Ø20.0mm)

M06- tool change (ATC)

N3 G00 G90 G54 G43 H01 Z 200.0 M01

G90-Absolute co ordinate system

G54- Wook co ordinate system

G43- Tool length Compensation' +ve' direction

H01 -Put with off set column number in tool length off set

Z 200.0- above the tool 200.0 mm from top of the work surface.

M01-Optional stop.

N4 G17 G40 X0.0 Y-65.0 M03 S1200

G17-X and Y Plane selection

G40-Cutter radius compensation Cancel

X0.0 -tool comes over point 1 in X axis

Y-65.0- tool comes over point 1 in Y axis

M03- Spindle starts Clock wise

S1200 -Spindle speed 1200 RPM

N5 Z 5.0 M08:

Z5.0 -Tool comes 5.0mm above the work surface

M08- Coolant ON.

N6 G94 G01 Z-5.0 F 50.0:

G.94-Feed mm/minute

G01-Linean interpolation

Z-5.0 Tool feeds in work.

F-50.0-Tool feed 50.0 mm/minute.

N7 G42 G01 Y- 50.0 D16.F 300 (D=10.0)

G42-Cutter moves Compensation right side

Y-50.0-Tool moves along Y axis to point 2

D16- Off set Column number

F300.0- Tool feed rate.

(D10.0)- Cutter radius Value.

N8 X 90

X 90.0- Tool moves X axis point 3

N9 G03 X10.0 0Y-40.0R10:

G03 - Tool moves counter clock wise point 4

X 100.0 - End point of are in X axis

Y-40.0- End point of are in Y axis

R 10- Radius of arc.

N10 G01 Y 40.0

G001 - liner Interpolation.

Y40.0 - Tool moves along Y axis point 5

N11 G91 G03 X-10.0 Y 10.0 R10:

G91-Incremental Co-Ordinate

G03 - Tool moves counter clock wise direction point 6

X-10.0-End point of are in 'X' axis

Y-10.0- End point of are in 'Y' axis

R 10 - Radius of arc

N12 G90 G001 X-90.0:

G90-Absolute Co-ordinate

G01-Linear interpolation

X-90.0- Tool moves X axis point 7

N13 G03 X-100.0 Y 40.0 I0.0 J-10;

G03-Tool moves counter Clock wise direction point 8

X-100.0-End point of arc in 'X' axis

Y-40.0- End point of arc in 'Y' axis

I0.0- Arc Centre in X axis

J-10- Arc Centre in Y axis

N14 G01 Y-40.0;

G01 - Linear Interpolation

Y-40.0- Tool Y axis point 9

N15 G03 X 90.0 Y-50.0 R10;

G03 - Tool moves Counter Clockwise direction point 10

© NIMI NOT TO BE REPUBLISHED

X- 90.0-End point of arc in 'X' axis

Y-50-End point of arc in 'Y' axis

R 10- Radius of arc

N16 G01 X0;

G01 -Liner interpolation

X0- Tool moves point 2

N17 G40 Y- 65

G40-Cutter radius Compensation Cancel

Y-65-Tool moves point 1

N18 Z 5.0 F 10000.0 M09;

Z 5.0-Tool moves 5.0 mm above the work piece

F 1000.0-Feed 1000.0 mm/minute

M09 - Coolant off

N19 G00 Z 200.0 M05;

G00 -Rapid Traverse

Z 200.0 -Tool moves 200.0 mm above the work piece

M05 - Spindle stop

N20 G91 G00 G28 Z0.0 Y0.0;

G91 - Incremental Co-Ordinates

G00 - Rapid Traverse

G28 - Return to reference position

Z 0.0 - Z axis return to home position

Y0.0- Y axis return to home position.

N21 M30;

M30-End of program with rewind.

Fanuc 'G' codes format are listed in Table 1

The symbol in the list represent the following

IP_ : X __ Y __ Z __ A ____

As seen above the format consists of a combination of arbitary axis addresses among X, Y, Z, A, B, C, U, V and W.

x : First basis axis (X usually)

y : Second basis axis (Y usually)

z : Third basis axis (Z usually)

α : One of the arbitrary addresses

β : One of the arbitrary addresses

X : X axis or its parallel axis

Y^P : Y axis or its parallel axis

Z^P : Z axix or its parallel axis

rilling cycle structure

Table 1

Functions	Illustrations	format
Positioning (G00)	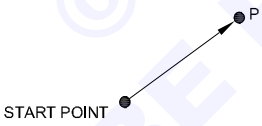	G00P ____ :
Linear interpolation (G01)	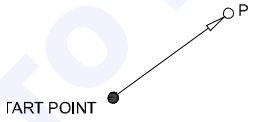	G01P ____ F ____ :
Circular interpolation (G02, G03)	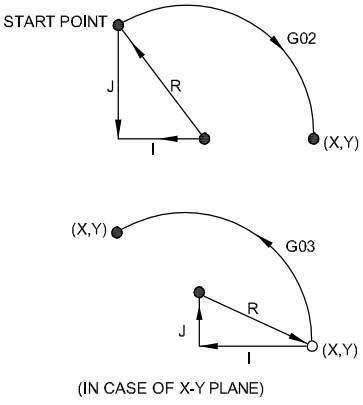	$G17\begin{Bmatrix}G02\\G03\end{Bmatrix}X_P - Y_P - \begin{Bmatrix}\underline{R}\\I\_J\_\end{Bmatrix}F\_\_;$ $G18\begin{Bmatrix}G02\\G03\end{Bmatrix}X_P - Z_P - \begin{Bmatrix}\underline{R}\\I\_K\_\end{Bmatrix}F\_\_;$ $G19\begin{Bmatrix}G02\\G03\end{Bmatrix}Y_P - Z_P - \begin{Bmatrix}\underline{R}\\J\_K\_\end{Bmatrix}F\_\_;$

© NIMI NOT TO BE REPUBLISHED

Functions	Illustrations	Tape format
Helical interpolation (G02, G03)	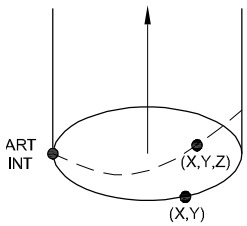 (IN CASE OF X-Y PLANE G03)	$G17\begin{Bmatrix}G02\\G03\end{Bmatrix}X_P - Y_P - \begin{Bmatrix}R\\I\_J\_\end{Bmatrix}\alpha\ \_\_F\_\_;$ $G18\begin{Bmatrix}G02\\G03\end{Bmatrix}X_P - Z_P - \begin{Bmatrix}R\\I\_K\_\end{Bmatrix}\alpha\ \_\_F\_\_;$ $G19\begin{Bmatrix}G02\\G03\end{Bmatrix}Y_P - Z_P - \begin{Bmatrix}R\\J\_K\_\end{Bmatrix}\alpha\ \_\_F\_\_;$ α : Any axis other than circular interpolation axes
Dwell (G04)		Per second dwell $G04\begin{Bmatrix}X\_\_\_\\P\_\_\_\_\end{Bmatrix};$ Per revolution dwell $G95\ G04\begin{Bmatrix}X\_\_\_\\P\_\_\_\_\end{Bmatrix};$
Exact stop (G09)	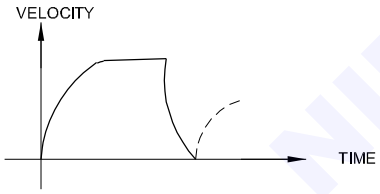	$G09\begin{Bmatrix}G01\\G02\\G03\end{Bmatrix}\_\_\_\_;$
Change of offset value of program (G10)		Geometry offset amount G10 L10 P ____ R ____; Wear offset amount G10 L11 P ____ R ____; Work zero point offset amount G10 L2 P ____ IP ____;
Cutter compensation (G40 - G42)	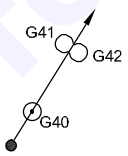	$\begin{Bmatrix}G17\\G18\\G19\end{Bmatrix}\begin{Bmatrix}G40\\G41\\G42\end{Bmatrix}IP\_\_\_\_\ D\_\_\_\_;$ D : Tool offset no.
Tool length compensation (G43, G44, G49)	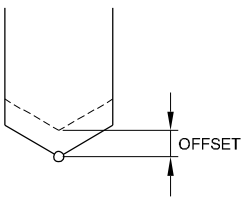	$\begin{Bmatrix}G43\\G44\\G43\\G44\end{Bmatrix}\alpha\_\_\_H\_\_\_;$ H _____ ; H : Tool offset number G49 ; ..... Cancel

© NIMI NOT TO BE REPUBLISHED

Functions	Illustrations	format
Tool offset (G45 - G48)	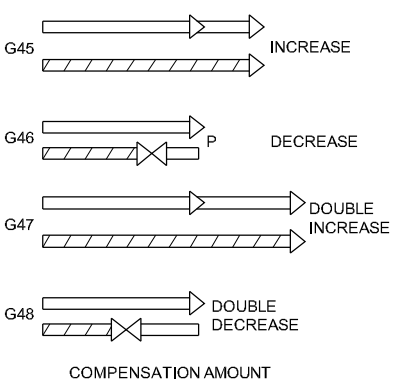	{G45 / G46 / G47 / G48} P ___D ___; H : Tool offset number
Scaling (G50, G51)	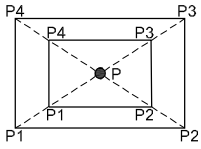	G51 IP ____ P ____ ; P : Scaling magnification G50 ; ..... Cancel
Setting of local co ordinate system (G52)	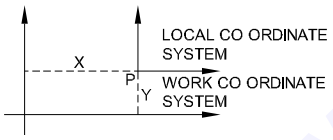	G52 IP _____;
Commond in machine coordinate system (G53)		G53 IP _____;
Selection of work coordinate system (G54 - G59)	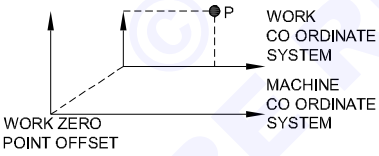	{G54 / : / G59} P ___;
Single direction positioning (G60)	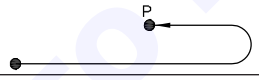	G60 IP _____;
Inch/metric conversion (G20, G21)		Inch input G20 ; Metric Input G21 ;
Stored stroke check (G22, G23)	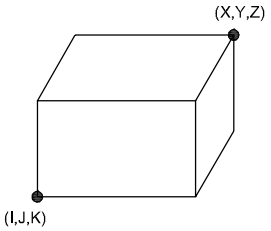	G22 X ___Y__Z__I__J___K____ ; G23 ; ..... Cancel
Reference point return check (G27)	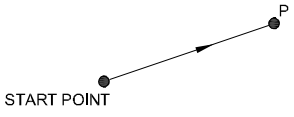	G27 IP _____ ;

© NIMI NOT TO BE REPUBLISHED

Functions	Illustrations	format
Reference point return (G28) 2nd, 3rd, 4th reference point return (G30)	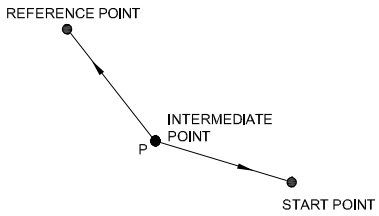	G28 IP____; 2 G30P 3 IP____; 4
Return from reference point (G29)	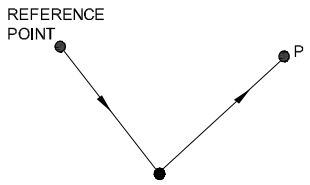	G29 IP _____ ;
Absolute / incremental programming (G90/G90)		G90 _____ ; Absolute G91 _____ ; Incremental G90 ___ G91 ___ ; Combined use
Change of work coordinate (G92)	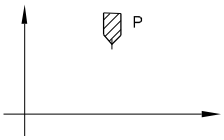	G92 IP _____ ;
Inverse time/ perminute feed/ perrevolution feed (G93, G94, G95)	1/min mm/min inch/min mm/rev inch/rev	G93 ___ F ____ ; Inverse time G94 ___ F ____ ; Feed per minute G95 ___ F ____ ; Feed per
Initial point return/ R point return (G98, G99)	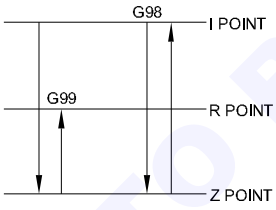	G98 _____ ; G99 _____ ;
Hypothetical axis interpolation (G07)	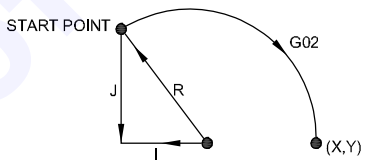	G07 α,0 {G17, G18, G19} {G02, G03} X_P___Y_P___Z_P____; G07 α,1 α ; Hypotheticalaxis
Polar coordinate (G15, G16)	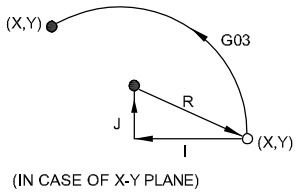	G17 G16 X_P ____ Y_P _____; G18 G16 Z_P ____ X_P _____; G19 G16 Y_P ____ Z_P _____; G15 ; ..... Cancel

© NIMI NOT TO BE REPUBLISHED

Functions	Illustrations	Tape format
Tool length measurement (G37)		G37 Z _____ ;
Skip function (G31) Multi step skip function (G31. 1 __ G31.3)	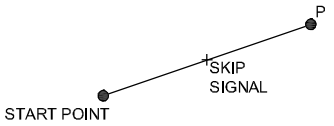	{G31 / G31.1 / G31.2 / G31.3} P ___F ___;
Thread cutting (G33)	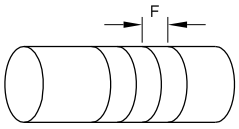	Equal lead thread cutting G33 IP ___ F ___ Q ___ ; Q: Thread cutting start point shift angle inch thread cutting G33 IP __ E ___ Q ___ ; E : Threads per inch
Programmable mirror image (G50.1, G51.1)	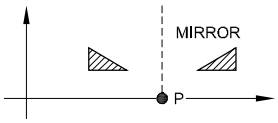	G51.1 IP ____; G50.1 ; ..... Cancel
Cutting mode/ Exact stop mode/ Tapping mode/ Automatic corner override mode	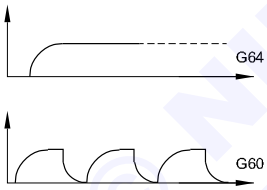	G64 ___ ; Cutting mode G60 ___ ; Exact stop mode G62 ___ ; Automatic corner override mode G63 ___ ; Tapping mode
Custom macro (G65, G66, G66.1, G67)	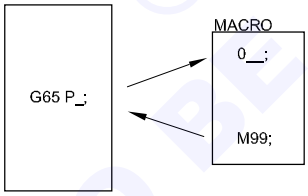	One shot call G65 P___ <Arugument assignment>; P : Program No. Modal call {G66 / G66.1 / G67;} P ___ < Arugument assignment > ; ..... Cancel
Coordinate system rotation (G68, G69)	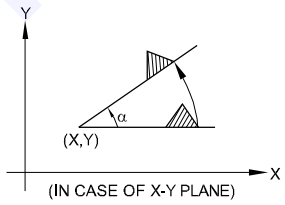	
Canned cycles (G73, G74, G76, G80 - G89)	SEE “CANNED CYCLE”	G80 ; ..... Cancel {G73 / G74 / G76 / G81 / : / G89} x ____ Y ____ z ___; P ___ Q ___ R ___ F ___ L ___ ;

NOT TO BE REPUBLISHED © NIMI

G-Code	Group	Function
G61	15	Exact stop mode
G62		Automatic corner over ride
G63		Tapping mode
G64		Cutting mode
G65	0	Macro call
G66	12	Macro modal call
G67		Macro modal call cancell
G68	16	Co-ordinate rotation
G69		Co-ordinate rotation cancell
G73	9	Peckdrilling cycle
G74		Counter tapping cycle
G75	1	Plunge grinding cycle (O-GSC)
G76	9	Fine boring cycle
G77	1	Direct constant - Dim plunge ginding cycle (O-GSC)
G78		Cont. Feed surface grinding cycle (O-GSC)
G79		Inc. Feed surface grinding cycle (O-GSC)
G80	9	Cancell cycle cancell external op.function
G81		Drilling cycle or spot boring cycle
G82		Drilling cycle or counter boring cycle
G83		Peck drilling cycle
G84		Tapping cycle
G85		Boring cycle
G86		Boring cycle
G87		Back boring cycle
G88		Boring cycle
G89		Boring cycle
G90	3	Absolute command
G91		Increment command
G92	0	Setting for work co-ordinate system
G94	5	Feed per minute
G95		Feed per revelution
G96	13	Constant surface speed control
G97		Constant surface speed control cancel
G98	10	Return to initial point in canned cycle
G99		Return to R point in canned cycle
G107	0	Cylindrical interpolation
G150	19	Normal direction control cancel
G151		Normal direction control right side
G152		Normal direction control left side
G160	20	In-feed control function cancel (O-GSC)
G161		In-feed control function (O-GSC)

NOT TO BE REPUBLISHED

Movement 1: Positioning to hole machining start position

Movement 2: Moving of X,Y and Z axis.

Movement 3: Moving to point R at rapid traverse

Movement 4: Movement at hole bottom

Movement 5: Return to point R

Movement 6: Return to initial point at rapid travers

G81 - Spot Drilling Cycle (Fig 2)

Fig 2

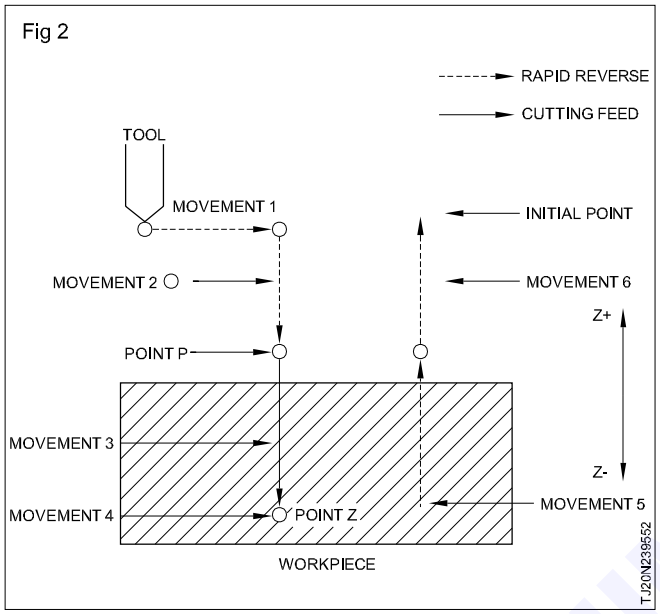

Format:

G98 or G99 G81 X__ Y__ Z__ R__ F__;

X,Y - Positioning points.

Z - Total hole depth.

R - Tool position Level

F - Feed

G82 -Counter Boring Cycle (Fig 3)

Fig 3

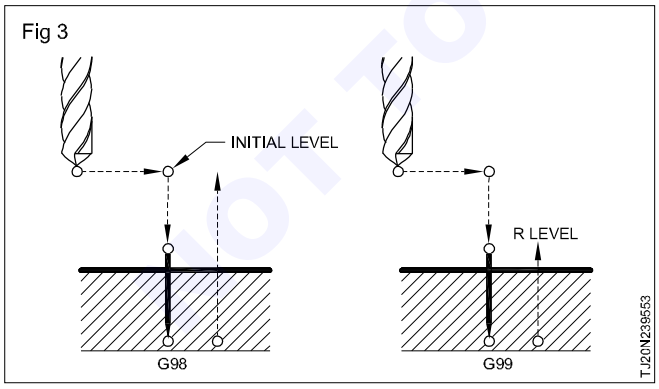

Format:

G98 or G99 G82 X__ Y__ Z__ R__ P__ F__;

P - Dwell time in milliseconds.

G83 - Peck Drilling Cycle

Format:

G98 or G99 G83 X__ Y__ Z__ R__ Q__ F__;

Q - Depth of cut per pass in mm.

G73 - High Speed Peck Drilling Cycle

Format:

G98 or G99 G73 X__ Y__ Z__ R__ Q__ F__;

G83 & G73 - Peck drilling cycle (Fig 4)

Fig 4

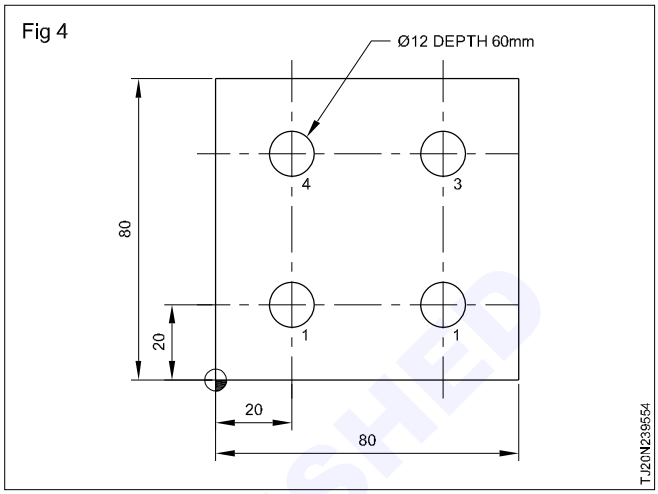

Points

1 X20.0 Y20.0

2 X60.0 Y20.0

3 X60.0 Y60.0

4 X20.0 Y60.0

O0003;

N5 G91 G28 Z0.0;

N10 G28 X0.0 Y0.0;

N15 M06 T1;

N20 G00 G90 G54 X20.0 Y20.0 S2000 M03;

N25 G43 H1 Z100.0;

N30 G00 Z50.0 M08;

N35 G98 G81 Z-3.0 R3.0 F100.0;

N40 X60.0 Y20.0;

N45 X60.0 Y60.0;

N50 X20.0 Y60.0;

N55 G00 G80 Z100.0 M09;

N60 G91 G28 Z0.0 M05;

N65 G28 X0.0 Y0.0;

N70 M01;

N75 M06 T2; (∅ 12mm drill)

N80 G00 G90 G54 X20.0 Y20.0 S1200 M03;

N85 G43 H2 Z100.0;

N90 G00 Z50.0 M08;

N95 G98 G83 or G73 Z-60.0 R3.0 Q4.0 F100.0; (Peck drilling cycle)

© NIMI NOT TO BE REPUBLISHED

N100 X60.0 Y20.0;

N105 X60.0 Y60.0;

N110 X20.0 Y60.0;

N115 G00 G80 Z100.0 M09;

N120G91 G28 Z0.0 M05;

N125 G28 X0.0 Y0.0;

N130 M30;

Tapping cycles

G84 - **Right hand tapping cycle**

Format:

G98 or G99 G84 X__ Y__ Z__ R__ P__ F__;

X,Y - Positioning points.

Z - Total depth.

R - Tool position level

P - Dwell time in milliseconds.

F - Feed. (Pitch value)

G84 cycle is right hand tapping. In this the tool moves downward in clockwise direction (M03) in feed. At the bottom dwell time is performed, during that time spindle speed, feed stops and spindle automatically reverses its direction (M04). Return movement is also in feed. Spindle speed should be given less.

G74 - **Left hand tapping cycle (Fig 5)**

Fig 5

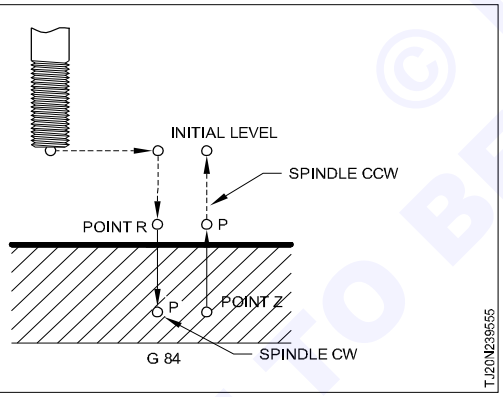

Format:

G98 or G99 G74 X__ Y__ Z__ R__ P__ F__;

X,Y - Positioning points.

Z - Total depth.

R - Tool position level

P - Dwell time in milliseconds.

F - Feed. (Pitch value)

In this cycle the tool moves downward in counter clockwise direction (M04) with feed. At the bottom dwell time is performed, during that time spindle speed, feed stops and spindle automatically reverses its direction (M03). Return movement is also in feed.

G85 - Reaming or boring cycle

Format:

G98 or G99 G85 X__ Y__ Z__ R__ F__;

X,Y - Positioning points.

Z - Total depth.

R - Tool position level.

F - Feed.

G86 - BORING CYCLE (Rough)

Format:

G98 or G99 G86 X__ Y__ Z__ R__ F__;

X,Y - Positioning points.

Z - Total depth.

R - Tool position level

F - Feed.

G76 - Boring cycle (Fine) (Fig 6)

Format:

G98 or G99 G76 X__ Y__ Z__ R__ Q__ F__;

Q - Shift amount in mm. (value should be very less between 0.1 - 0.5).

Example:

Boring cycle

Tools

1 Ø36 mm drill

2 Ø39.5mm rough boring

3 Ø40mm fine boring (G76)

N5 G91G28Z0

N10 G28X0Y0

N15 M06 T5; (Ø39.5mm rough boring tool)

N20 G00 G90 G54 X50.0 Y50.0 S1200 M03;
N25 G43 H50 Z100.0;

N30 G98 G86 Z-35.0 R3.0 F100.0; (Rough boring)

N35 G00 G80 Z100.0 M09;

N40G91 G28 Z0.0 M05;

N45 G28 X0.0 Y0.0;

N50 M01;

N55 M06 T6; (Ø40mm fine boring tool)

N60 G00 G90 G54 X50.0 Y50.0 S1200 M03;
N65 G43 H06 Z100.0;

N70 G00 Z50.0 M08;

N75 G98 G76 Z-35.0 R5.0 Q0.2 F100.0; (Fine boring) (Fig 7)

N80G00 G80 Z100.0 M09;

© NIMI NOT TO BE REPUBLISHED

Fig 6

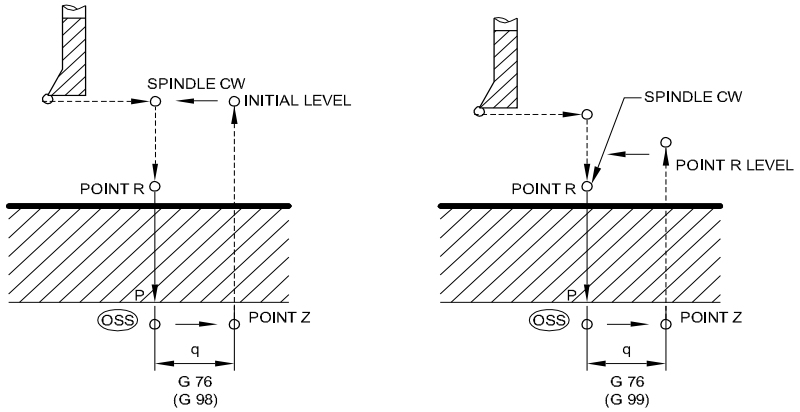

N85 G91 G28 Z0.0 M05;

N90 G28 X0.0 Y0.0;

N95 M30;

Fig 7

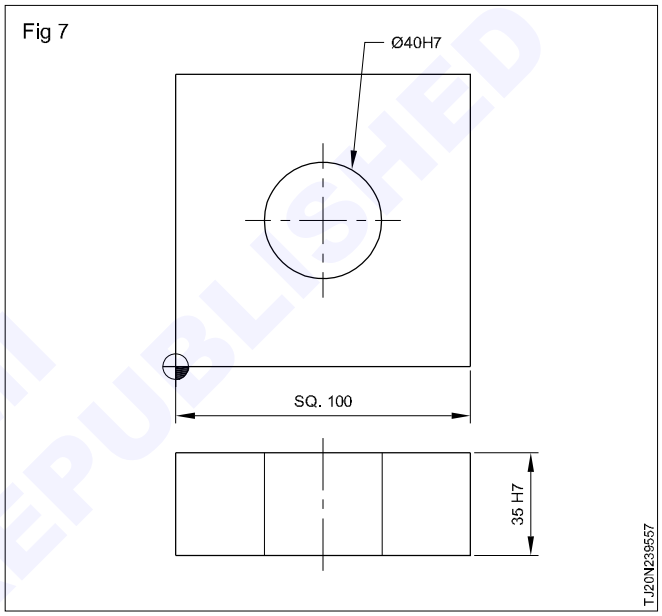

© NIMI
NOT TO BE REPUBLISHED

2D and 3D machining with CAM software

Objectives: At the end of this lesson you shall be able to
- **2D profile creation in software**
- **2D tool path creation for drawing**
- **2D NC program creation**
- **3D tool path creation**
- **3D NC creation and execute the program in machine.**

This is the main workspace in Master cam where you view, create, and modify geometry, drafting entities, and tool paths. (Fig 1)

Fig 1

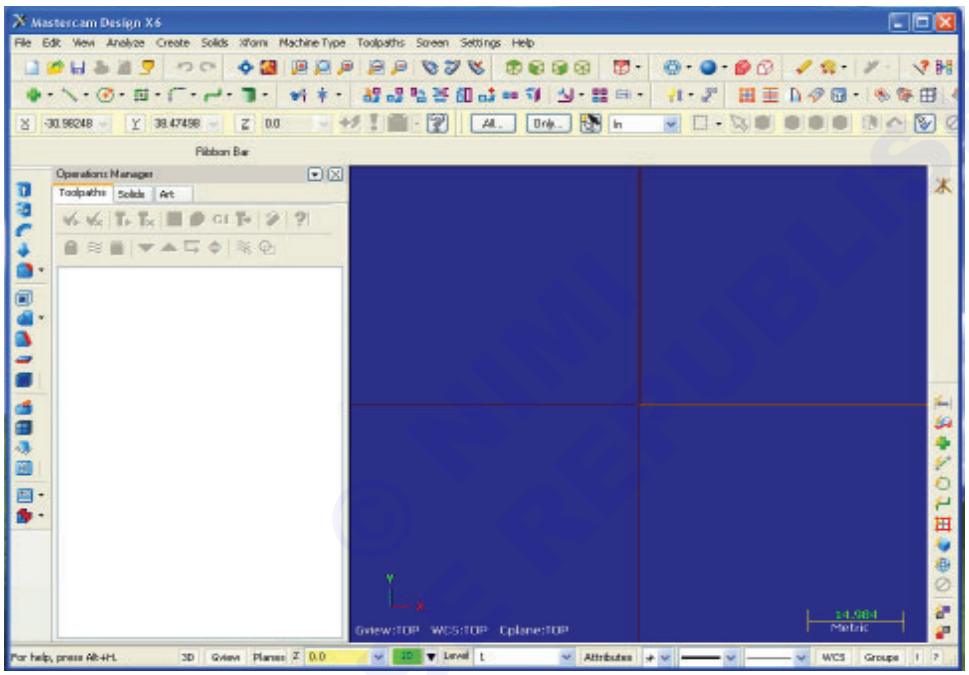

Status Bar

The Status bar appears along the bottom of the Master cam window. You use its functions to edit the current settings for entity colours, attributes, levels, and groups, and to define the view and orientation of entities in the graphics window. (Fig 2)

Fig 2



Operations Manager

The Operations Manager (shown below) houses the Toolpath Manager, Solids Manager, and Art Manager. It is located to the left of the graphics window. Operations Manager to improve your working conditions, while leaving the entire graphics window free for drawing.

To re-locate the Operations Manager, click its title bar (shown below), drag it to the location you want, and drop it. (Fig 3)

Fig 3

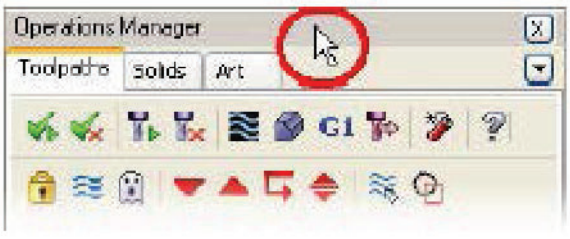

Below is an example of what the Operations Manager looks like when it has been unlocked and re-sized. (Fig 4)

Fig 4

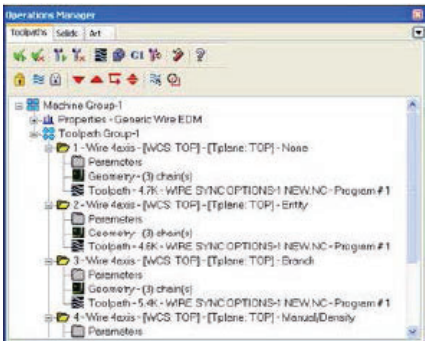

Toolbars

Toolbars are collections of functions represented by icons. Arrows in the toolbar represent a submenu of functions you can view and select in a drop-down list. (Fig 5)

Fig 5

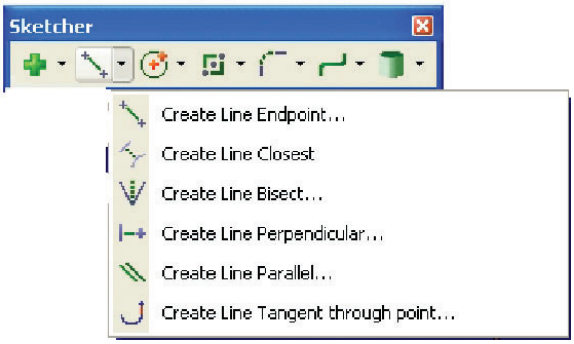

Ribbon Bars

Ribbon bars function like dialog boxes but look similar to toolbars. Ribbon bars open when you activate many Master cam functions. You use them to create, position, and modify geometry. (Fig 6)

Fig 6



Shortcut Keys

Master cam provides special keyboard assignments you use, instead of clicking icons, to access ribbon bar and dialog box options. These are referred to as shortcut keys.

For example, you can use the following shortcut keys when working with the Create Point Segment ribbon bar function:

[D] - Defines the distance between the points

[N] - Sets number of points

[P] - Applies changes and remains in the function

[O] - OK (fixes live entity and exits function)

Menu Type

File Menu

Use File menu functions to open, edit, print, save, track, and compare files. (Fig 7)

Fig 7

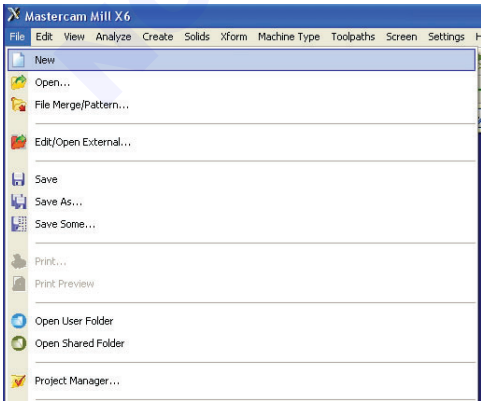

Master cam provides seamless integration with most popular CAD/CAM file formats. Converting files from and to non-Master cam formats occurs automatically when you open and save files in Master cam. When saving files, you can save all or only some of the entities to a specified format, and include descriptive text and a thumbnail image of the geometry with the file data. You can also import and export files to and from specified directories, and merges data into the current file from a Pattern file.

Edit Menu

This menu provides access to functions you use to edit geometry, such as the Join entities, Modify Spline, Convert NURBS, and Simplify functions, and the Trim / Break submenu functions. Other Edit menus functions allow you to cut, copy, paste, delete, or select all entities in the graphics window. (Fig 8)

Fig 8

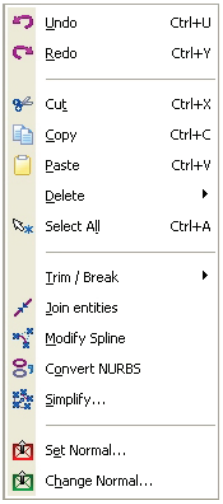

© NIMI NOT TO BE REPUBLISHED

View Menu

The View menu helps you manage the appearance and orientation of the Master cam graphics window. (Fig 9)

Fig 9

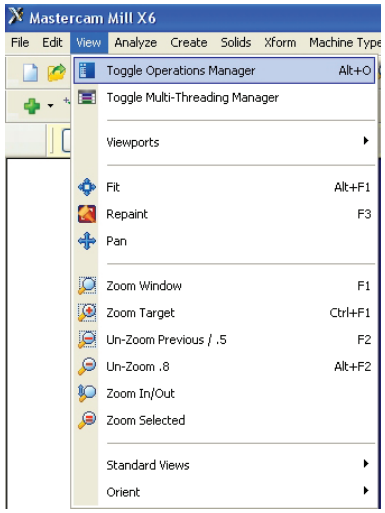

Analyze Menu

Use Analyze menu functions to view and edit entity properties. (Fig 10)

Fig 10

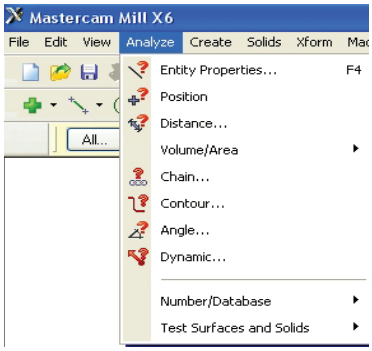

Create Menu

This extensive menu includes all Sketcher (Create Geometry), Curve, Surfaces, and Drafting functions. (Fig 11)

Fig 11

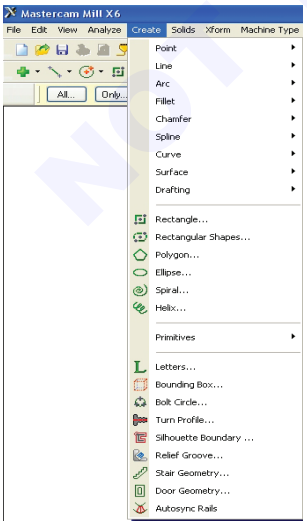

Solids Menu

Functions in this menu are available only if your Master cam installation includes Master cam Solids. (Fig 12)

Fig 12

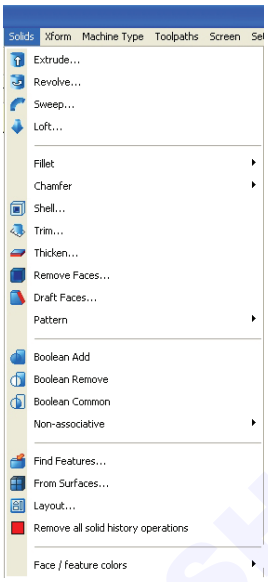

Xform Menu

Use Xform (transform) functions to move or copy selected entities by mirroring, rotating, scaling, offsetting, translating, stretching, and rolling them. (Fig 13)

Fig 13

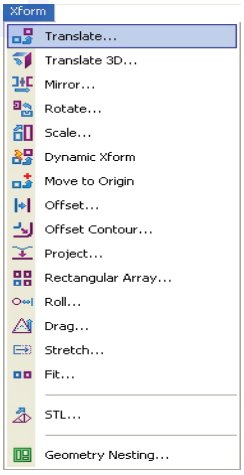

Help Menu

This menu provides access to a variety of information about Mastercam. (Fig 14)

Fig 14

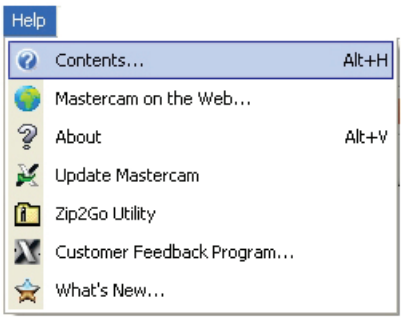

© NIMI NOT TO BE REPUBLISHED

Moving Toolbar Functions

To rearrange toolbar functions in a toolbar, choose Settings, Customize and just drag and drop the functions in the Master cam window from one position to another. Use the same technique to move functions between toolbars.

Deleting Toolbar Functions

To delete a function from an existing toolbar, choose Settings, Customize. Then drag the function from the toolbar and drop it in anywhere in the Master cam window. (Fig 15)

Dimension Attributes

- You define the following defaults in the Dimension Attributes properties page:
- Display format and scale.
- Text centring.
- Symbols or units used to display radius, diameter, and angular dimensions.
- Tolerance settings for linear and angular dimensions.

Fig 15

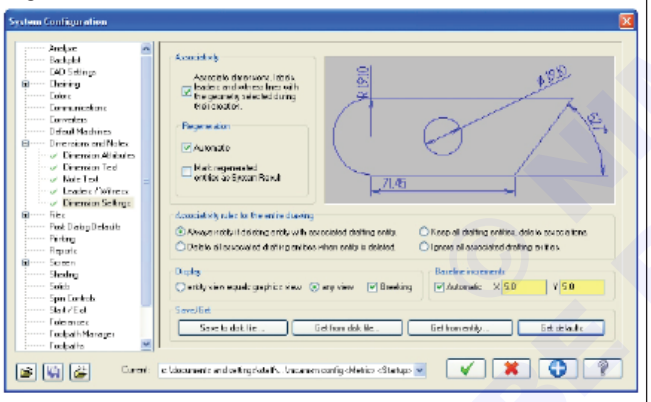

Dimension Text

The default text properties you can set for drafting dimensions in this page include: (Fig 16)

Fig 16

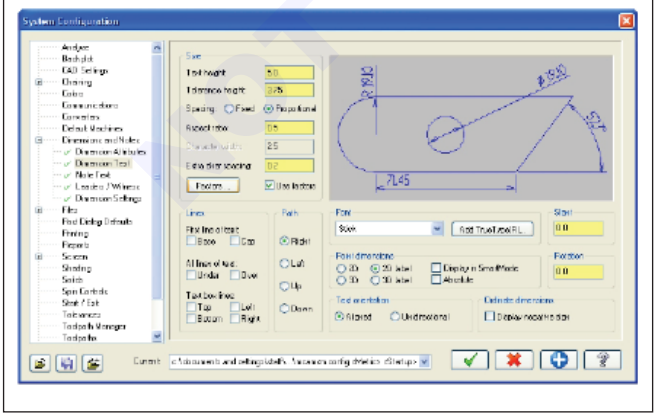

- Text height, width, and spacing
- Text path or direction
- Point dimension text display
- Co-ordinate dimension: display negative sign
- Line and borders
- Font
- Text alignment/orientation
- Slant and rotation

Changing Units of Measure (Metric / Inch)

When you open a part file that uses different units (metric or inch) from those currently in use, Master cam displays the System Configuration dialog box, which informs you that Master cam is switching units and loading an alternate default configuration file. (Fig 17)

Fig 17

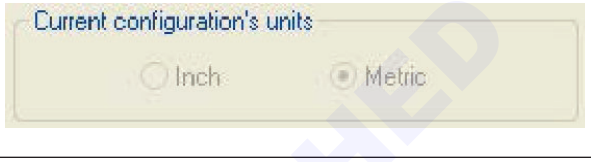

Visual Cues

Visual cues are graphic symbols that appear to the right of the cursor when Auto Cursor detects a specific position type. They identify to ensure that you select the correct entity and position. (Fig 18)

Fig 18

	Origin
	Arc Center
	Endpoint
	Intersection
	Midpoint
	Point
	Quadrant
	Nearest
	Horizontal/Vertical
	Tangent
	Perpendicular

SKETCHER

All basic geometry can be created through the Sketcher toolbar. (Fig 19)

Fig 19

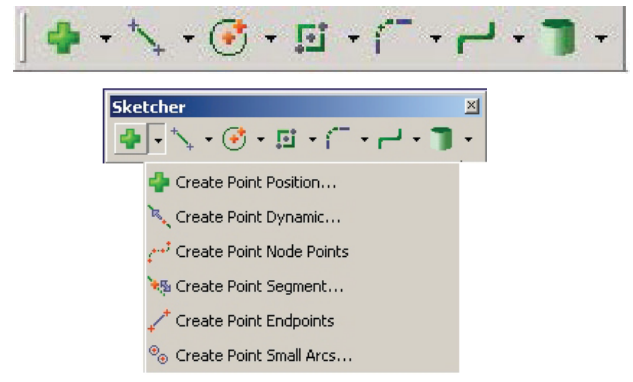

NOT TO BE REPUBLISHED

Create Rectangular Shapes (Fig 20)

1 Choose Create, Create Rectangular Shapes. The Rectangular Shapes Options dialog box opens.

2 Select the Base Point or 2 Points method of rectangle definition at the top of the dialog box.

3 Select the Expand button to view all dialog box options.

4 In the Shape section, select the desired shape.

Fig 20

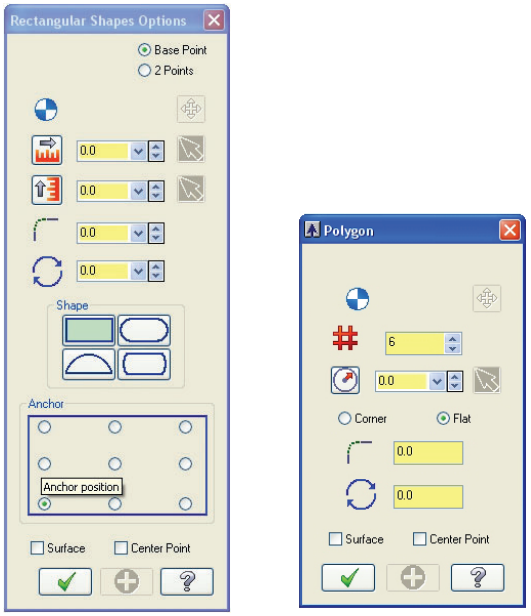

Creating Polygon

- Choose Create, Create Polygon. The Polygon dialog box opens.
- Specify the number of sides the polygon will have by entering a value in the Number of Sides field. The number of sides can range from 3 to 360.
- Click in the graphics window or use Auto Cursor to position the base point.

Set the size of the polygon using one of the following methods:

- Enter a value in the Radius field of the dialog box.
- Click in the graphics window to position a second point of the polygon.
- Use Auto Cursor to position the second point.

Creating Fillet Chain

- Choose Create, Fillet, Fillet Chains. Both the Chaining dialog box and the Fillet Chain ribbon bar open with the Chaining dialog box on top.
- Use the Chaining dialog box to chain the entity to which you want to apply the fillet. Click OK to complete your selection and create the fillet.
- To accept the default fillet values, click the Apply button on the Fillet Chain ribbon bar.
- If you want to change the values, use the ribbon bar to edit the fillet options as follows:

- Enter a radius value in the Radius field.
- Choose a fillet sweep direction from the drop down menu in the dialog box.

Direction field

- Choose a fillet style from the drop down menu in the Style field.
- If you do not want the entities trimmed to the fillet, select the No Trim button.

EDITING FUNCTIONS

Convert NURBS: Converts lines, arcs, and parametric splines to NURBS splines, and curve-generated and parametric surfaces to NURBS surfaces.

Join entities: Joins collinear lines, arcs that have the same center and radius, or splines that were originally created as the same entity.

Close arc: Closes an arc to form a complete circle.

Modify NURBS: Modifies a control point position on a NURBS spline or surface to change the shape of the NURBS entity defined by the control point.

Simplify: Converts splines that define arcs into arc entities, and splines that define lines into line entities.

Trim / Break: Trims entities by cutting them back or extending them at their Intersections. (Figs 21 to 24)

Fig 21



Sketch Ex: 1

Fig 22

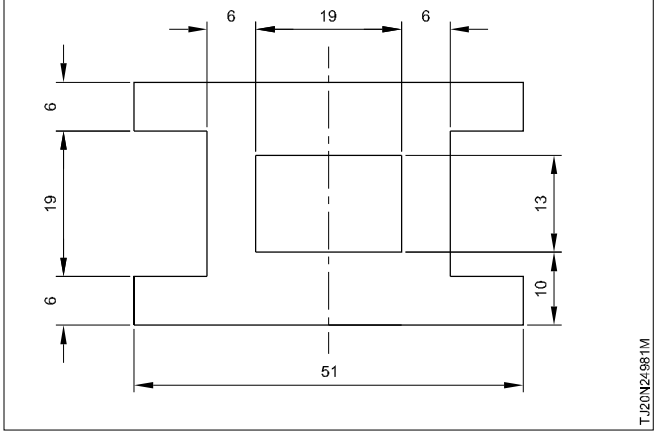

© NIMI NOT TO BE REPUBLISHED

Sketch Ex: 2

Fig 23

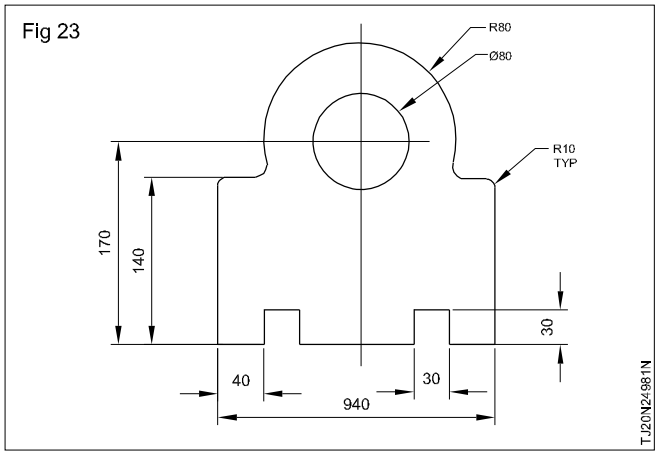

Sketch Ex: 3

Fig 24

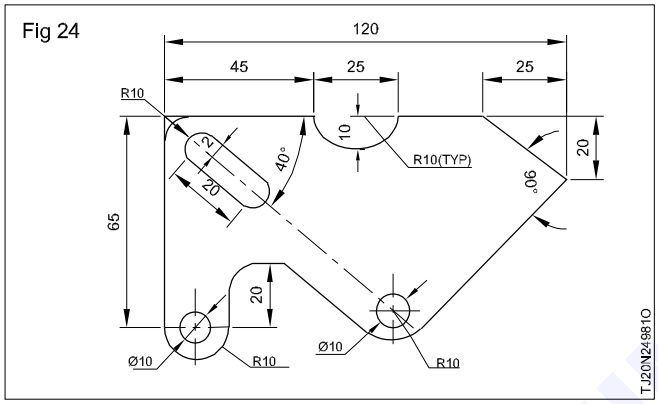

2D TOOLPATHS

Step-1

Set up the stock to be machined

Turorial-2

2D Toolpaths

- To display the Toolpaths operation manager press Alt + O.

Machine Type

- Mill
- Default (Fig 25)

Fig 25

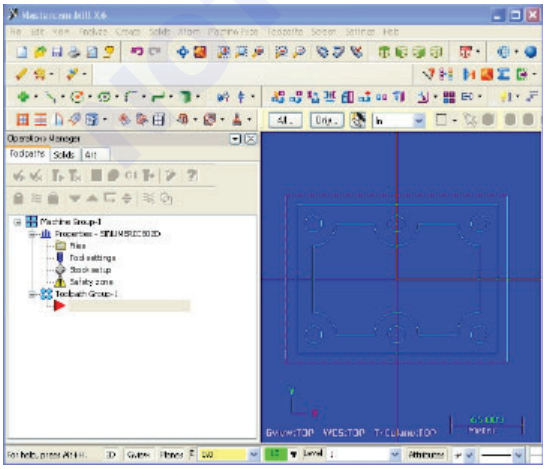

- Use the Fit icon to fit the drawing to the screen.
- Select the plus in front of Properties to expand the Toolpaths Group Properties. (Fig 26)

Fig 26

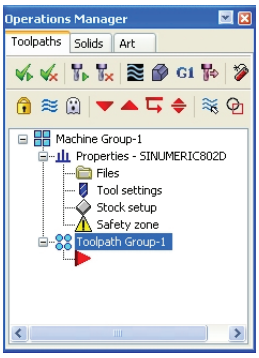

- Select Stock Setup.
- Change the parameters to match the screenshot as shown in Fig 27.

Fig 27

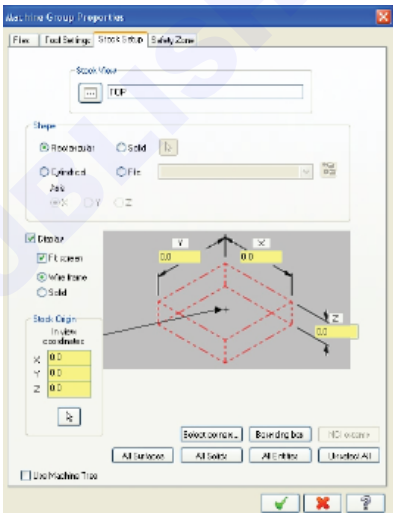

- Select the Tool Settings tab to set the tool parameters and the part material.
- Change the parameters to match the screenshot as shown in Fig 28.

Fig 28

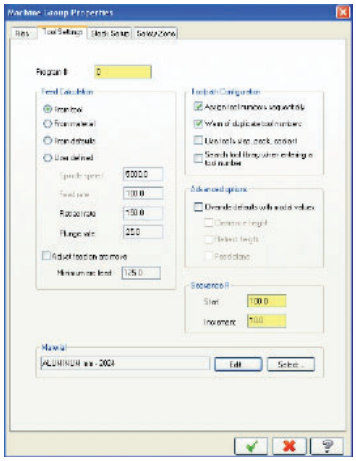

- Select the OK button to exit Toolpaths Group Properties  .

© NIMI NOT TO BE REPUBLISHED

- Select the Isometric View from the view toolbar to see the stock.
- Select the Top View from the view toolbar to see the part from the top.

STEP-2

OP Drill 6 x Ø10.5mm Diameter holes

Toolpaths

- Drill Toolpath.
- Select the OK button to enter the same NC name as the geometry file name.
- Select the Mask on Arc button.
- [Select arc to match]: Select one of the 6 circles as shown in Fig 29.

Fig 29

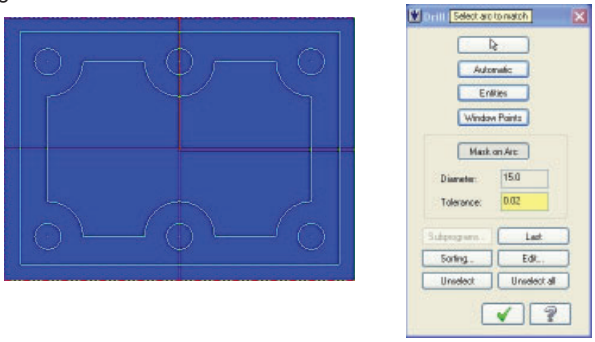

- The Diameter value should be now 15.
- Select the entire part using Window. (Fig 30)

Fig 30

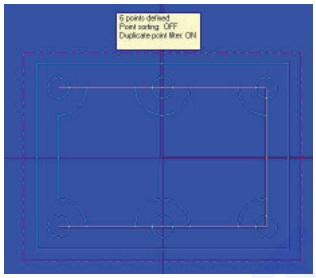

- Hit Enter when finish.
- Select the OK button to exit Drill Point Selection.
- Click on the Select Library tool button. (Fig 31)
- Select the Filter button in the Tool Selection dialog box. (Fig 32)
- Select the None button to disable any previous tool selection as shown in Fig 33.
- Select the Spot Drill in the Tool Types list.
- Select the drop-down arrow in the Tool Diameter field and select Equal.
- Enter 5mm in the Tool Diameter value box.
- Select the OK button to exit Tool List Filter. (Fig 33)

Fig 31

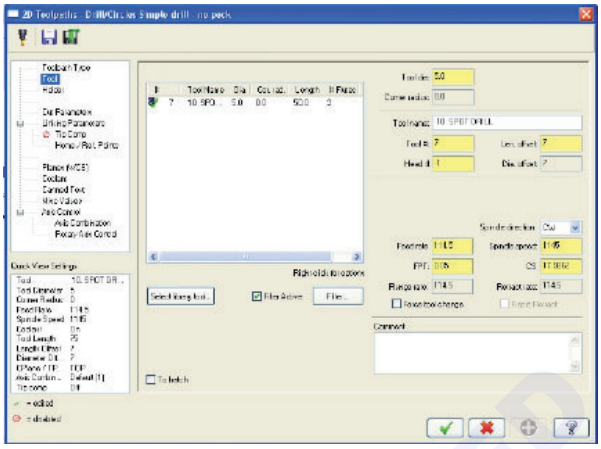

Fig 32

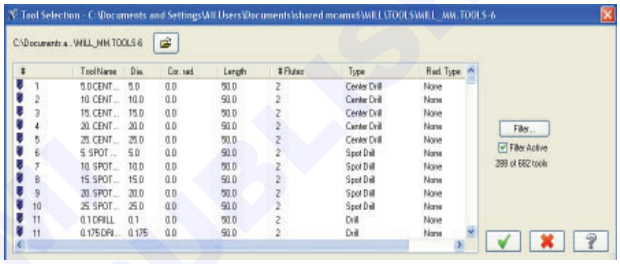

Fig 33

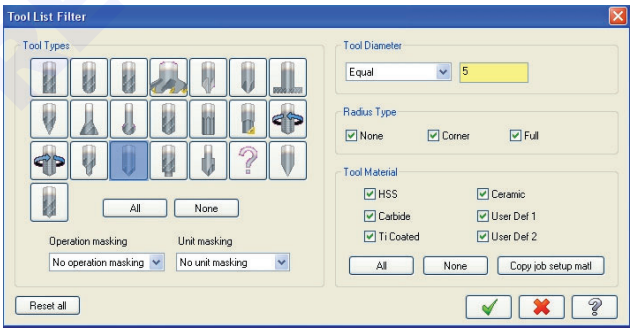

- Make sure that the tool is selected (highlited) in the Tool Selection window. (Fig 34)

Fig 34

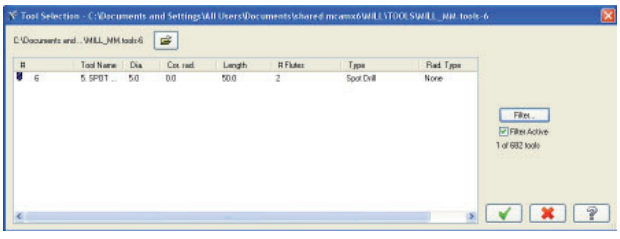

- Select the OK button to exit Tool Selection.

The Feed rate, Plunge rate, Retract rate and Spindle speed are based on the tool definition. Change them as desired.

© NIMI NOT TO BE REPUBLISHED

- In the Comment field type a comment about the toolpath for future reference.
- Select the Simple drill –no peck tab and change the parameters to match the following screenshot.
- We want to use the spot drilling to chamfer the holes. (Fig 35)

Fig 35

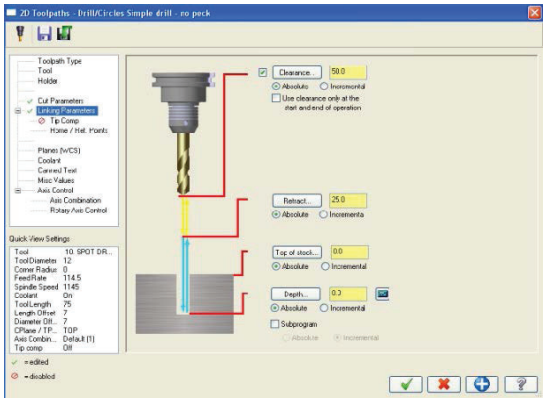

- To calculate the Depth, select the calculator icon.
- Change the parameters as shown in Fig 36.

Fig 36

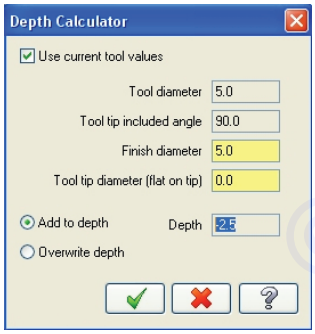

- Select the OK button to exit.
- The drilling Cycle should be set to default; Drill/ Counterbore.
- Select the OK button to exit drilling parameters. (Fig 37)

Fig 37

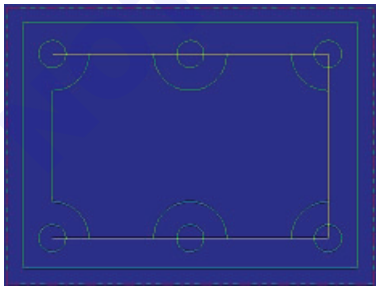

- To change the order in which the holes are spot drilled, select Geometry in the Toolpaths Manager. (Fig 38)
- Right-mouse click inside of the Drill Point Manager and select Sort options. (Fig 39)
- Select the Point to Point sort method.

Fig 38

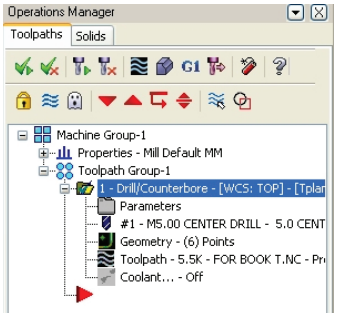

Fig 39

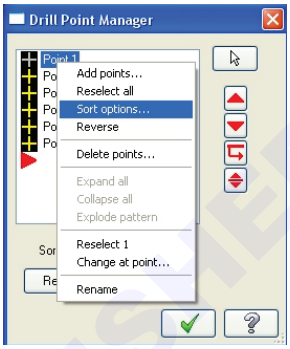

- Select the OK button to exit the Point Sorting dialog box. (Fig 40)

Fig 40

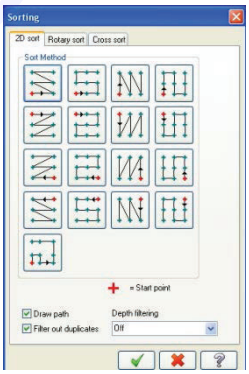

- [Select sorting start point]: Select the center point of the first hole to drill. (Fig 41)

Fig 41

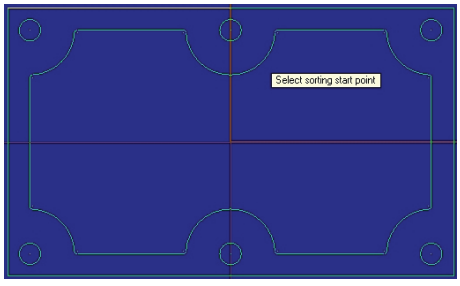

- Select the OK button to exit the Drill Point Manager dialog box.
- Select the Regenerate all dirty operations button.

Step-3

Drill the Ø10.5mm Diameter hole

- Toolpaths Manager.

© NIMI NOT TO BE REPUBLISHED

- Right-Mouse Click and select Copy. (Fig 42)

Fig 42

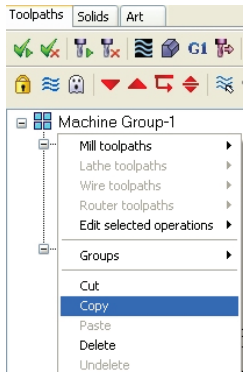

- Right-Mouse Click again and select Paste.
- The Toolpath Manager will look as shown.
- Select the Parameters in the second drill operations.
- Select the Toolpath Parameters tab.
- Click on Select Library tool.
- Select the Filter button.
- Make the changes as shown.
- Select the OK button  .
- Highlight the 31/64 Drill.
- Select the OK button  .
- Make any necessary changes in the Toolpath parameters page. (Fig 43)

Fig 43

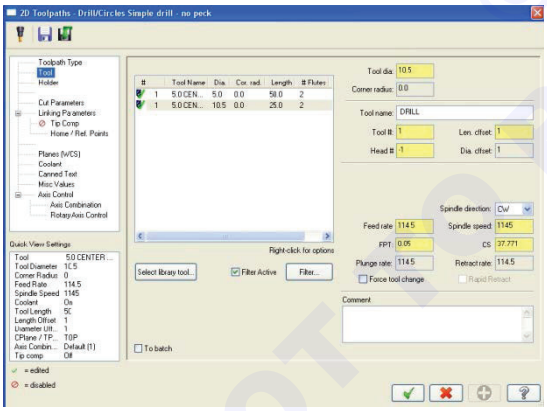

- In the Comment field type a comment about the toolpath for future reference.
- Select the Simple drill-no peck tab and change options as shown in Fig 44.
- Enable the Tip comp… button select it.
- Change the parameters as shown in Fig 45.
- Select the OK button to exit the Drill Tip Compensation page. 
- Select the OK button to exit the Drill Parameters page. 

Fig 44

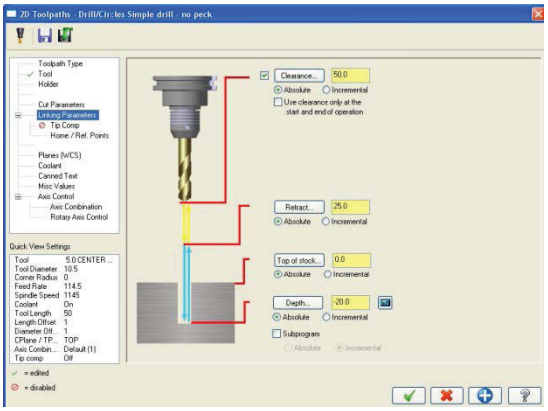

Fig 45

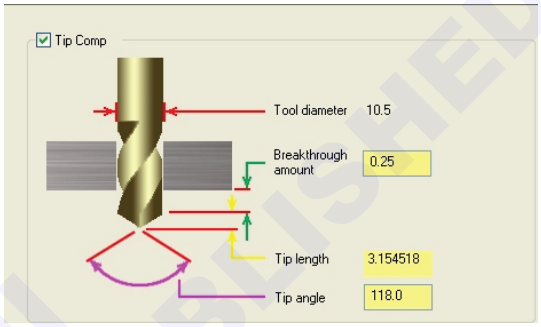

- Select the Regenerate all dirty operations button.

Step-4

Tapping the (6 x M12 x 1.5) Tap holes

- In the Toolpaths Manager, select only the Peck Drill operation.
- Right-Mouse Click and select Copy.
- Right-Mouse Click again and select Paste.
- The Toolpaths Manager will look as shown.
- Select the Parameters in the second drill operations. (Fig 46)

Fig 46

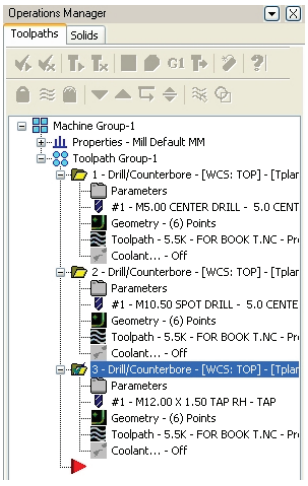

- Select the Toolpath Parameters.
- Click on the Select Library Tool and using the Filter, select the 9/16-12 Right Hand Tab from the library.

© NIMI NOT TO BE REPUBLISHED

- Make any necessary changes in the Toolpaths Parameters page. (Fig 47)

Fig 47

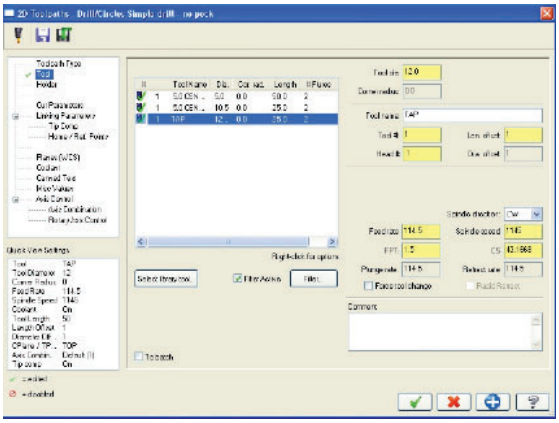

- In the Comment field type a comment about the toolpath for future reference.
- Select the second page and enter the Depth value as shown in Fig 48.

Fig 48

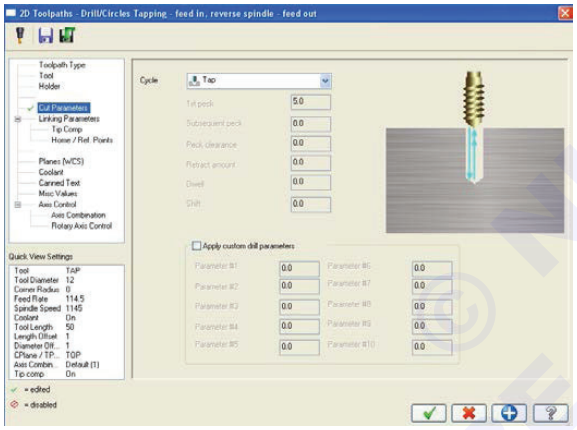

- Disable Tip Comp.
- Change the drill Cycle to Tap.
- Select the OK button to exit the Drill Parameters page.



- Select the Regenerate all dirty operations button.
- If necessary, select the down arrow to move the arrow one step down to include the tapping operation.

Step-5

Contour the Outside profile

Toolpaths

- Contour Toolpath
- Select the first entity in the contour as shown in Fig 49.
- Besure to change the contour in a CW direction.
- Select the OK button to exit Chaining.



- Select the Toolpath parameters tab.
- Click on the Select Library tool button.

Fig 49

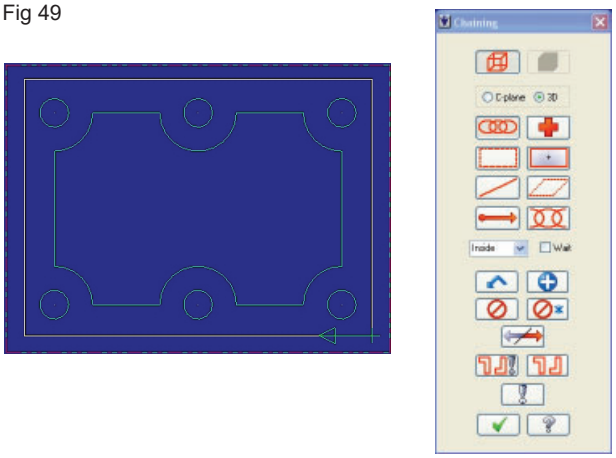

- Use the Filter button to select the ¾" Flat Endmill from the library. (Fig 50)

Fig 50

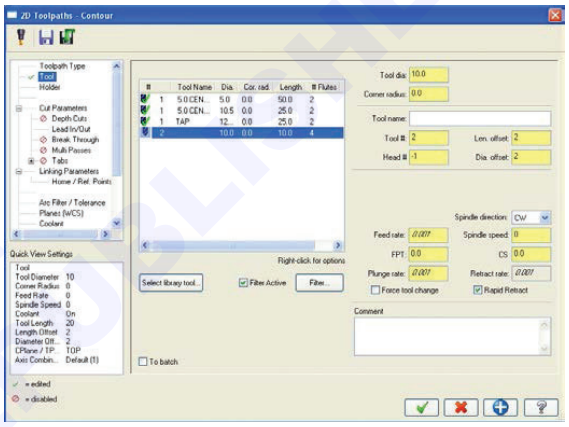

- In the Comment field type a comment about the toolpath for future reference.
- Make all the necessary changes as shown and select the Contour parameter page.
- Enable Depth of cuts and select the button to set the cuts along the Z-axis.
- Change the Max rough step value as shown in Fig 51.

Fig 51a

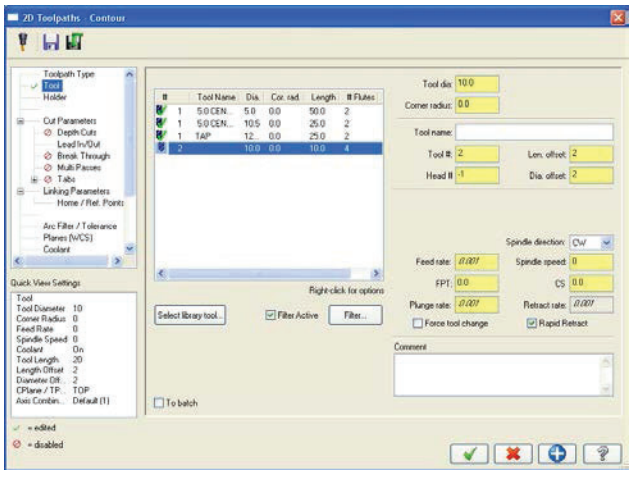

NOT TO BE REPUBLISHED © NIMI

Fig 51b

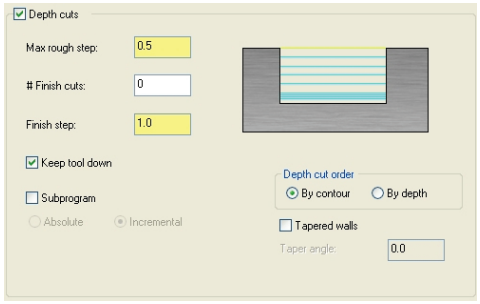

- Select the OK button to exit.
- If you want to cut through without leaving any burr enable Break through and select the button.
- Enter the Break through amount as shown in Fig 52.

Fig 52

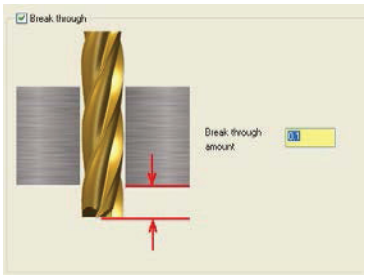

- Enable the box in front of Lead in/out and select a combination of a Line and an Arc at the beginning and/or end of the contour toolpath for a smooth entry/ exit while cutting the part.
- Change the parameters as shown in Fig 53.

Fig 53

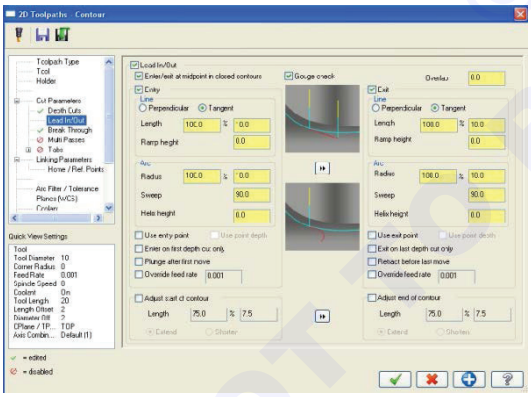

- Select the OK button to exit the Lead In/Out dialog box.
- Select the OK button again to exit Contour parameters.

Step-6

Pocket the inside contour

Toolpaths

- Pocket Toolpath
- Select one entity of the pocket chain, as shown in Fig 54.

Fig 54

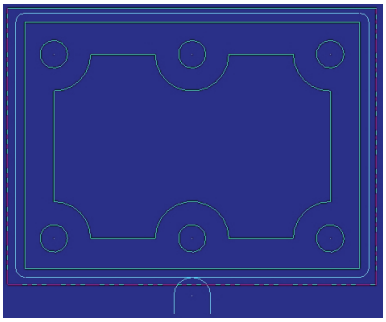

- Select the OK button to exit Chaining.
- Select the 0.375" Flat End Mill following the steps outlined before.
- Make all the necessary changes as shown and select the Pocket parameter page. (Fig 55)

Fig 55

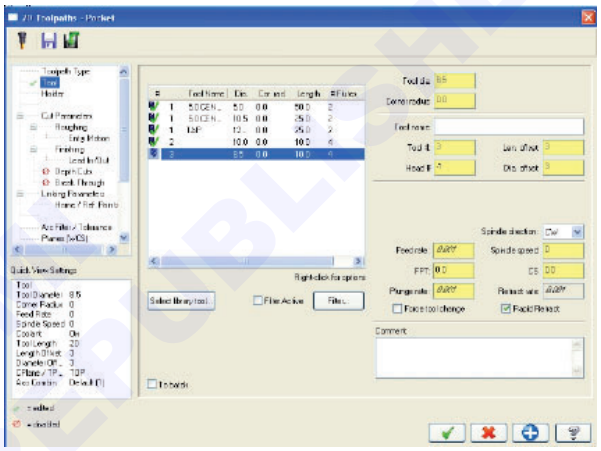

- Enter the Depth value to set the final machining depth for the pocket operation. (Fig 56)

Fig 56

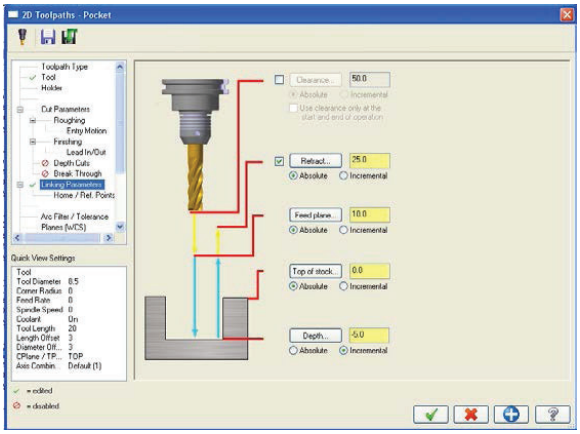

- Select the Roughing/Finishing parameters tab.
- Select the Constant Overlap Spiral as the Cutting method. (Fig 57)
- Disable the Finish area.
- Select the OK button to exit Pocket parameters. (Fig 58)

© NIMI NOT TO BE REPUBLISHED

Fig 57

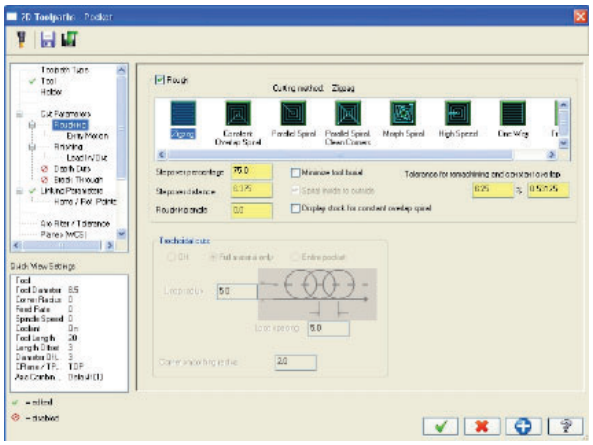

Fig 58

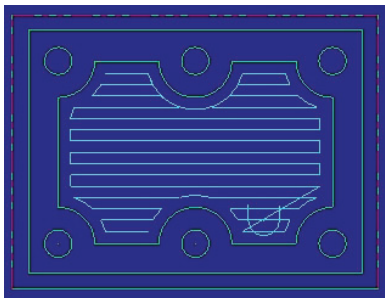

Step-7

Backplot the Toolpath

- Click on the Toolpath Group-1 in the Toolpaths Manager to select all operations.
- Select the Select All Operation button.
- Select the Backplot selected operations button.
- Make sure that you have the following buttons turned on. (Fig 59)

Fig 59

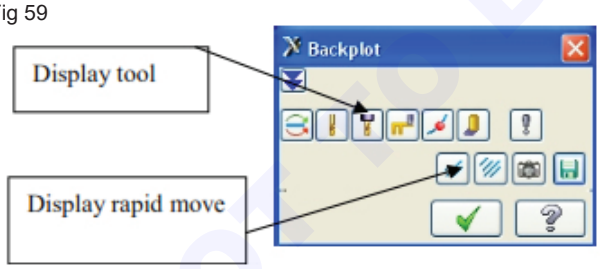

- Select the Isometric View from the view toolbar to see the stock.
- Select Fit button.
- Select the Play button. (Fig 60)
- Select the OK button to exit Backplot.

Verify - Toolpath verification

Step-8

Verify

- Expand the Toolpaths Manager if necessary by dragging the right side. (Fig 61)

Fig 60

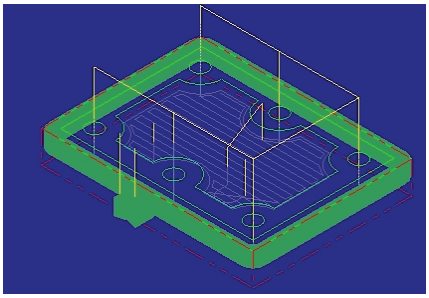

Fig 61



- Select the Verify selected operations button.
- Set the Verify speed by moving the slider bar in the speed control bar.
- Select the Machine button to start simulation.
- The finished part should appear as shown in Fig 62.

Fig 62

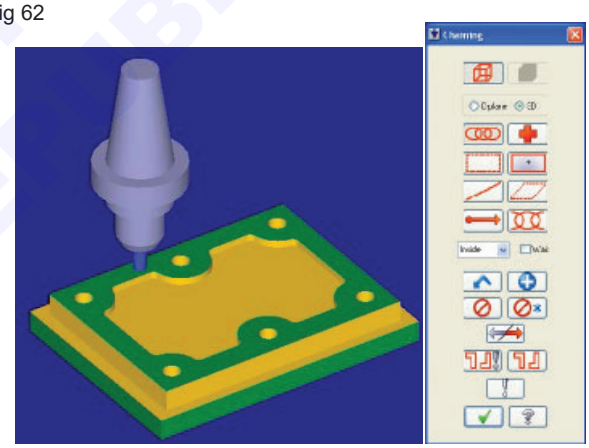

- Select the OK button to exit Verify. 

Step-9

Post the file

- Select all operations button from Toolpath Manager.
- Select Post selected Operations.
- In the Post Processing window, make all the necessary changes as shown in Fig 63.
- Enable Edit to automatically launch the default editor.
- Select the OK button to continue. 
- Select the Save button.
- Select the red X to exit Mastercam Editor. (Fig 64)

© NIMI NOT TO BE REPUBLISHED

Fig 63

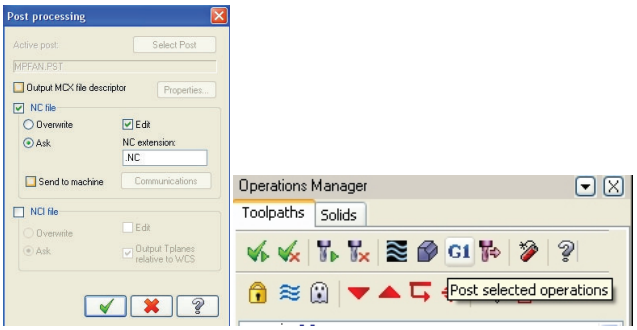

Fig 64

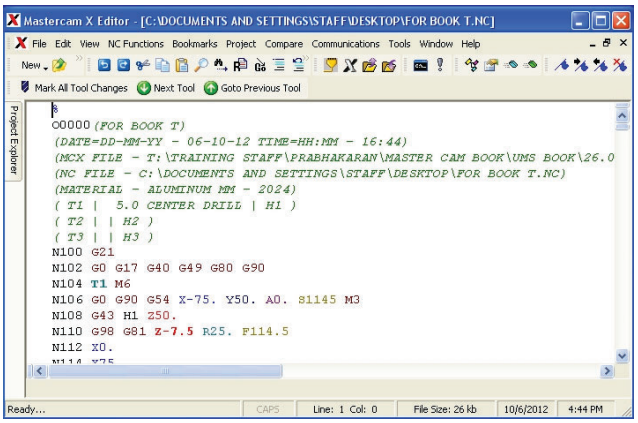

3D TOOL PATH CREATION

Rough And Finish Toolpaths

Step-1

Set the stock to be machined

Machine Type

- Mill
- Default
- To display the Tool paths Manager press Alt + O. (Fig 65)
- Use the Fit icon to fit the drawing to the screen.
- Select the plus in front of Properties to expand the Toolpaths Group Properties. (Fig 66)

Fig 66

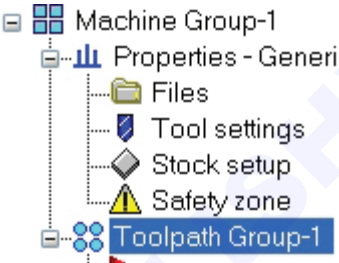

Fig 65

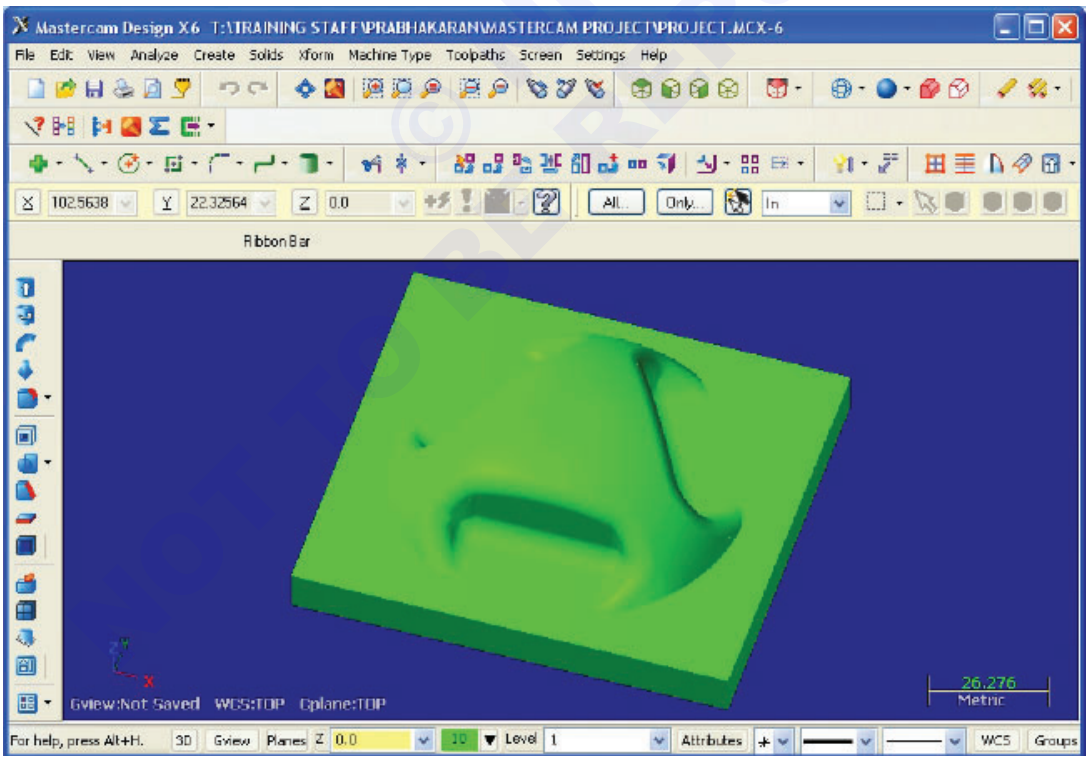

- Select Stock setup.
- Change the parameters to match the screen shot as shown in Fig 67.
- Select BOUNDING BOX. (Fig 68)
- Tick STOCK and LINES ARCS and select OK button.
- Select the Tool Settings tab to set the tool parameters.
- Change the parameters to match the following screenshot.

© NIMI NOT TO BE REPUBLISHED

Fig 67

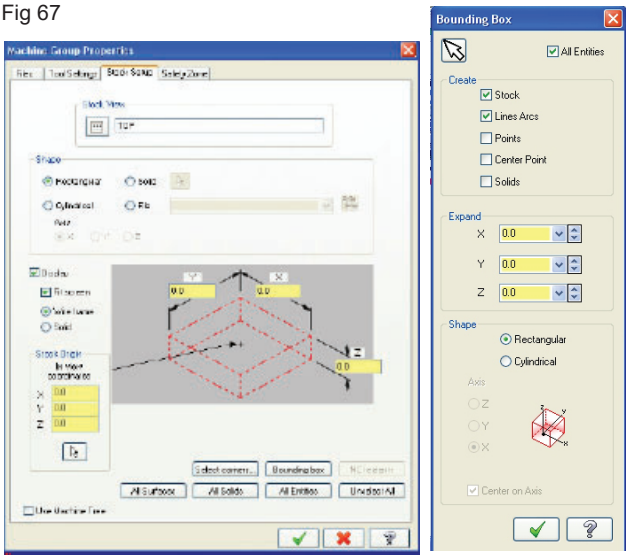

Fig 68

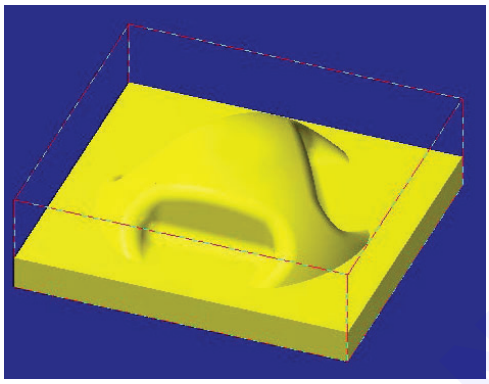

- Select the OK button to exit Toolpath Group Properties.

Step-2

Rough Out Using Surface Pocket

- Surface Rough.
- Rough Pocket Toolpath.
- Select the OK button to accept the NC name.
- Select all surfaces and press Enter Key in key board.
- Toolpaths surface selection window appear in screen.
- Select DRIVESURFACE select button.
- Select machining surface select SHOW button. (Fig 69)
- Select the End Selection button.
- Select the Containment button.
- Make sure that C-Plane mode is enabled.
- Select an entity of the chain.
- Select the OK button to exit Chaining.
- Select the OK button to exit Toolpath/surface selection.
- Right click mouse button on Toolpath parameters dialog box.
- Selet the entity of the chain. (Fig 70)

Fig 69

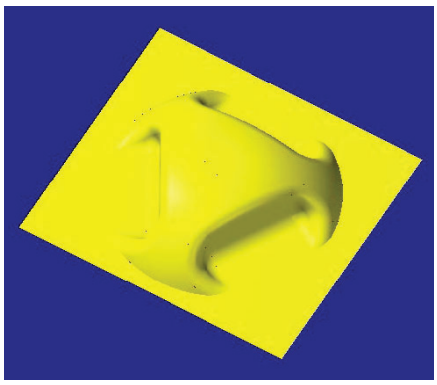

- Select the OK button to exit Chaining.
- Select the OK button to exit Toolpath/surface selection.
- Right click mouse button on Toolpath parameters dialog box. (Fig 71)

Fig 70

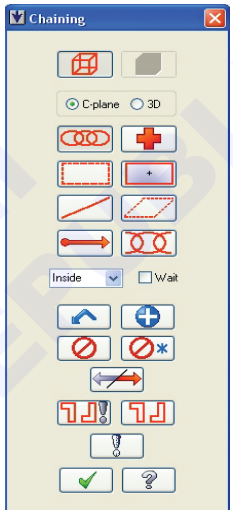

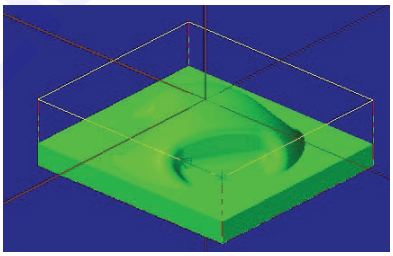

Fig 71

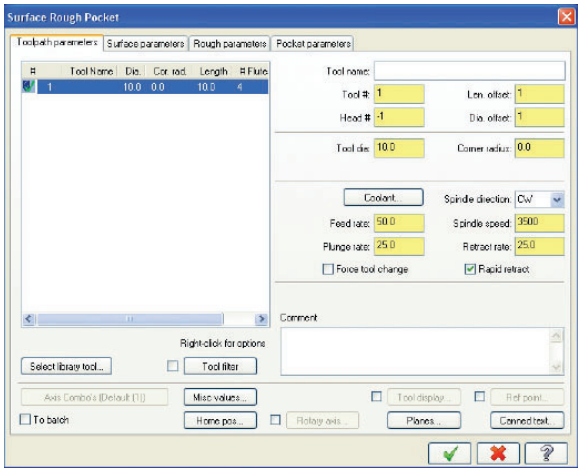

- Select required tool.
- Enter the Tool Diameter 10mm.
- Select the OK button to exit.
- Select the Surface parameters tab and make the changes as shown in Fig 72.

© NIMI NOT TO BE REPUBLISHED

Select the Rough parameters page and make the changes to match the following screenshot.

- Select Gap Settings
- Select Optimize Cut Order
- Select the Cut depths button and enable Keep top cut.

Fig 72

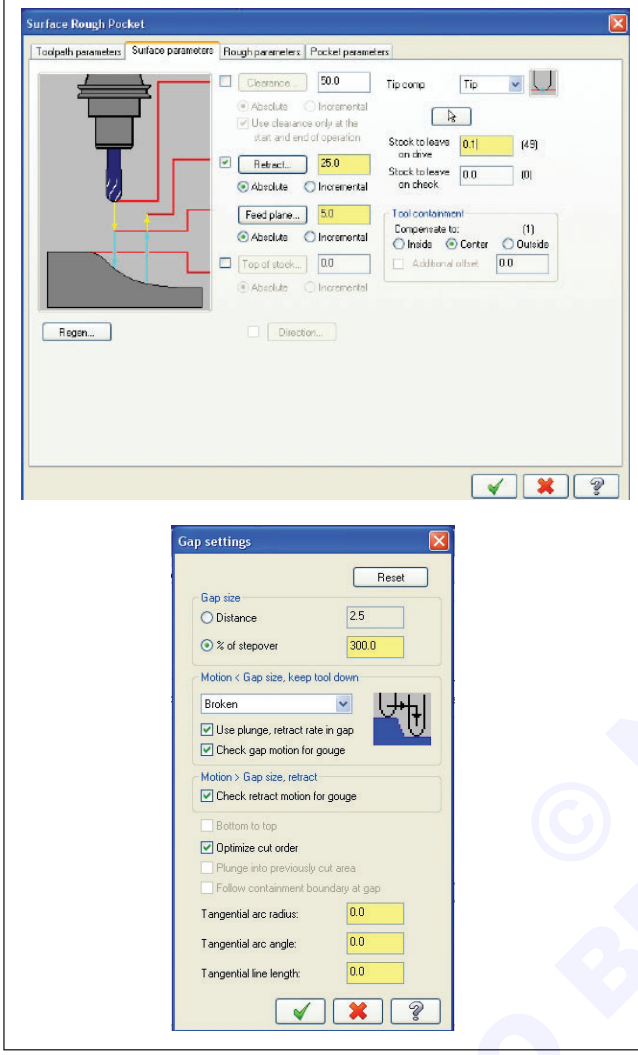

- At Max step down to force the system to cut 0.3 deep at the first pass. (Fig 73)
- Select the OK button to exit.
- Select the Pocket parameters and change the Cutting Method to High Speed. (Fig 74)
- Make sure that Spiral inside to outside is selected.
- Select the OK button to exit. (Fig 75)

Step-3

Finish the surface using surface finish parallel.

- Select Drive Surface]: Select the All button.
- Select the OK button to exit.
- Select the End Selection button.
- Select the OK button in the Toolpath/surface selection dialog box as we don't need any chain as a boundary for this toolpath.

Fig 73

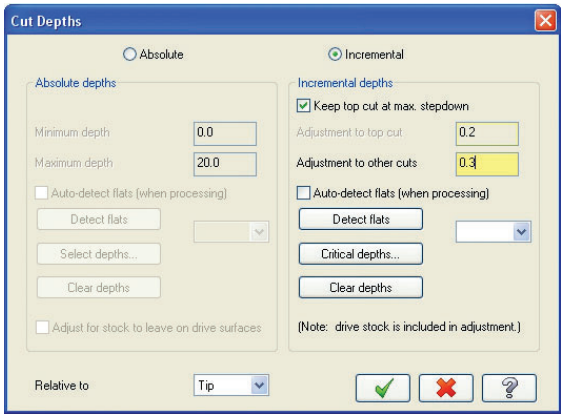

Fig 74

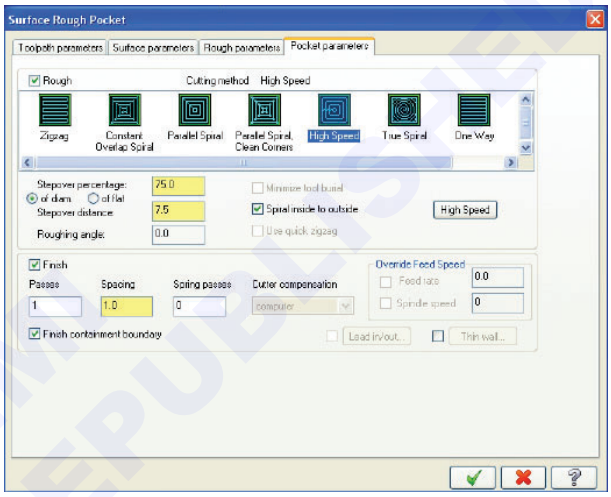

Fig 75

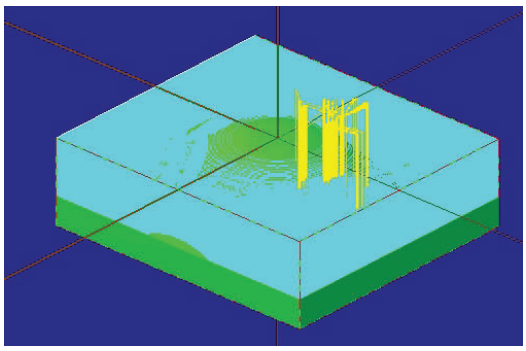

- Right click on Toolpaths parameters dialog box and select dia 10mm sphere end mill.
- Select the OK button to exit. (Fig 76)
- Select the OK button to exit the Tool Selection page.
- Make the necessary changes in the Toolpath parameters to match the following screenshot.
- Change the parameters as shown in Fig 77.
- Select Finish Parallel parameters and make any necessary changes. (Fig 78)
- Select the Gap settings button.
- Select optimize cut order.

© NIMI NOT TO BE REPUBLISHED

Fig 76

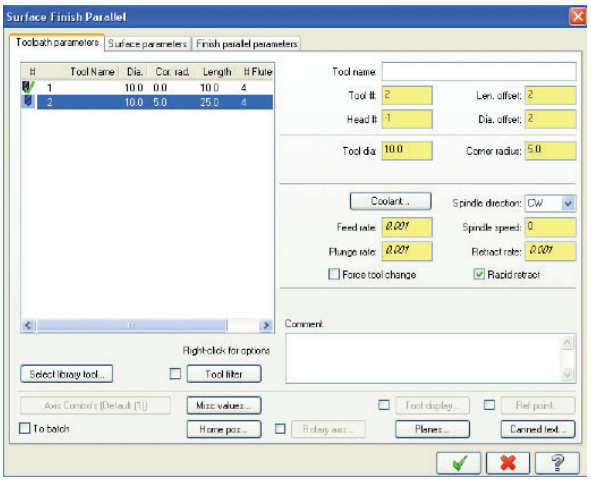

- Select the OK button to exit Gap settings.
- Select the OK button to exit the parameter screen.

Fig 77

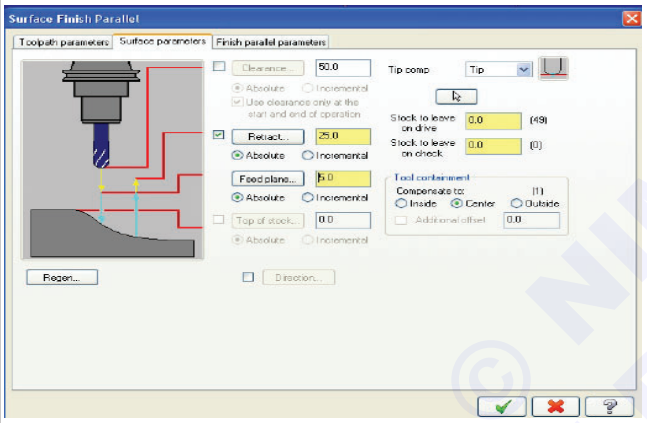

Step-4

Blackplot the Toolpath

Fig 78a

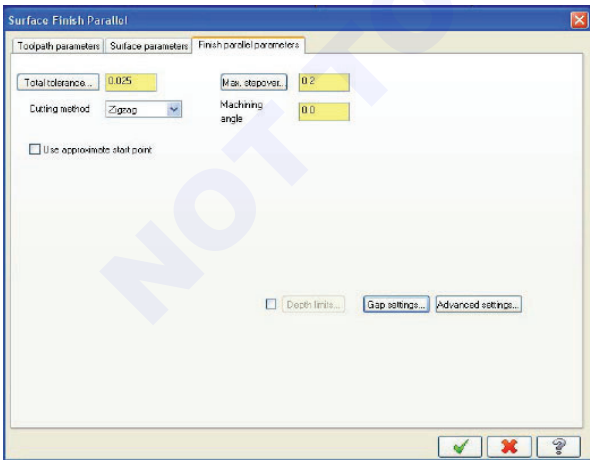

- Click on the Toolpaths tab to enable Toolpaths Manager. (Fig 79)
- Select all the operations icon to select all operations. (Fig 80)

Fig 78b

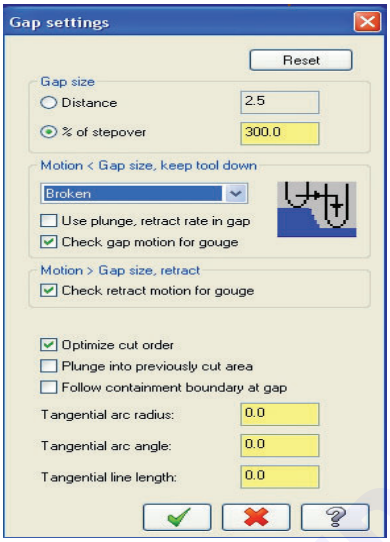

- Select the Backplot selected operations button.
- Make sure that you have the following buttons turned on (they will appear pushed down). (Fig 81)
- Display tool.
- Display rapid moves.

Fig 79

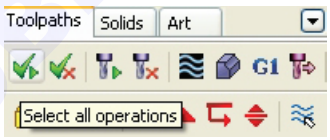

Fig 80

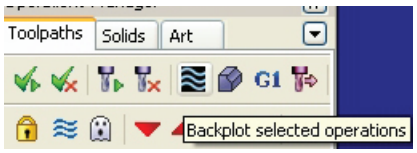

- Select the Play button. (Fig 82)
- Select the OK button to exit Backplot.

Step-5

Fig 81

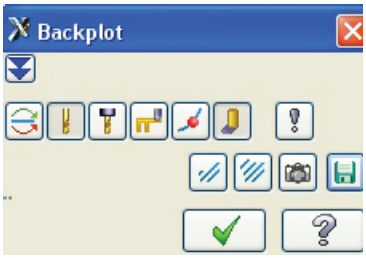

Post Process The File

- Select the Post selected operations button from Toolpath Manager. (Fig 83)
- In the Post processing window, make all the necessary changes as shown in Fig 84.
- Select the OK button to continue.

© NIMI NOT TO BE REPUBLISHED

Fig 82

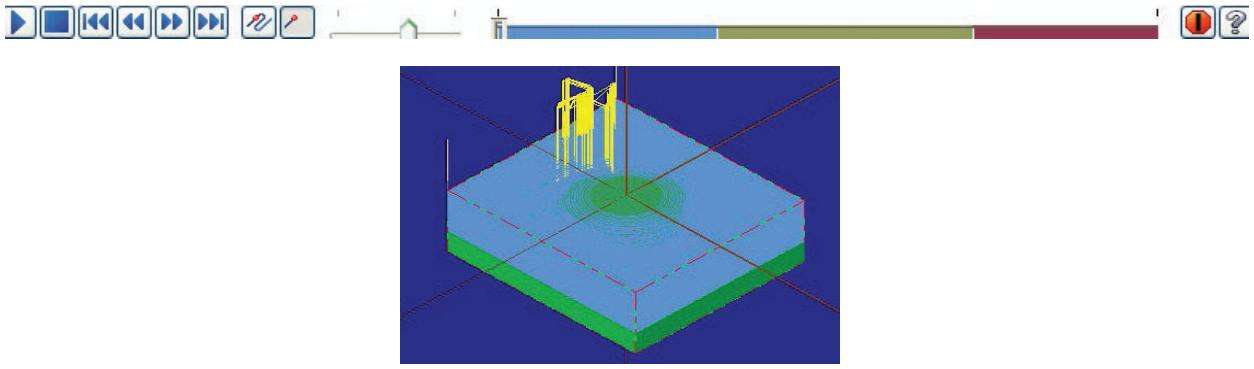

- Enter the same name as the geometry name in the NC file name field. (Fig 85)
- Select the Save button.
- Select the red X box at the upper right corner to exit the Editor. (Fig 86)

Fig 83



Save The Updated Mcx File

- Select the Save icon.

Fig 84

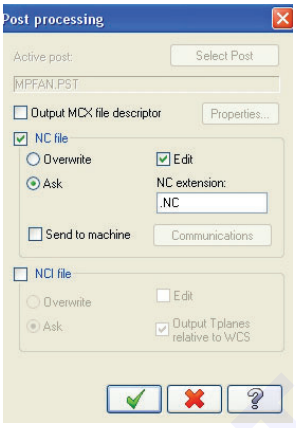

Set up procedure for machining CAM program in machining centre

- Copy the created program in pen drive from computer.
- Switch on the machine. Insert the pen drive in machine USB port.
- Copy the program from pen drive to machine memory.
- Open the program and rearrange the tool number.
- Check the simulation in graph mode.
- Set the work piece in machine vice.
- Take the work offset as required (X, Y axis).

Fig 85

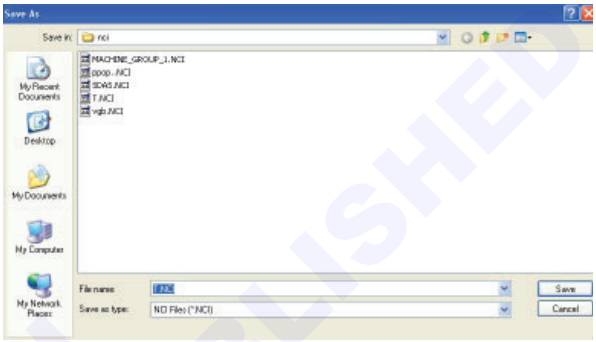

Fig 86

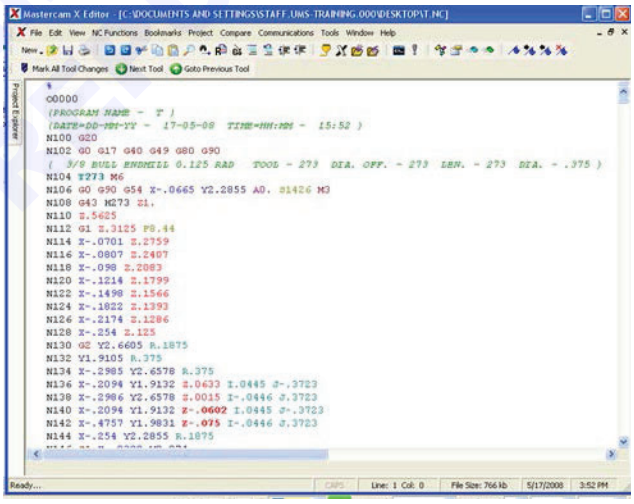

- Take Z axis offset by the tool.
- Reset and start the program in auto single block mode.
- Once the tool cutting start change to fully auto mode.
- Complete the machining. Check the dimension.
- Any deviation found correct wear offset and execute the same program.
- Remove the machined work piece, debur it then summit to inspection.

© NIMI NOT TO BE REPUBLISHED

Safety precaution of EDM wire cut machine

Objectives: At the end of this lesson you shall be able to
- **brief the safety point while working in wire cut machine**
- **describe machine safety**
- **describe safety of tool & equipments.**

Safety point while working in EDM/wire cut machine

- Do not touch electrodes while machining
- Keep machine surrounding area neat & tidy
- Work area and machine are to be properly grounded. Check periodically.
- Operator strictly not to use conductive material jewellery and clothing

Machine safety

EDM Machining, while simple in operation, poses risks to safety of the Operator. It is therefore important to understand the importance of certain maintenance activities, essential for safe and efficient operation of the EDMs. Operators have to be alert and aware of the following points.

Electrical Shocks

1 Make the Operator aware about hazards of even accidentally touching the electrodes while machining.

2 Keep as much area as possible around the machine in dry condition.

3 Ensure that the work area and machines are properly grounded. Check the grounding quality at periodic intervals.

4 Make rules that do not allow the Operators to wear conductive jewellery or clothing when using the Machine.

PPE

1 Wear appropriate eyewear.

2 Avoid looking directly into the spark.

3 Wear closed toe, non-slip shoes with rubber soles.

4 Ensure shoes are comfortable as operators need to stand for extended period of time.

Operational Safety

1 Know your machine. One of the best ways to prevent accidents.

2 Keep the area around your machine free of flammable materials.

3 Stay alert and give your undivided attention to machining.

4 The operator must be familiar with the operation technology of the wire cutting machine. Before starting, the machine should be lubricated according to the lubrication requirements of the equipment.

5 The operator must be familiar with the processing technology of fast-moving wire-cutting machine tools, properly select the processing parameters, and operate in accordance with the prescribed operating sequence to prevent failures such as wire breaks.

6 After the wire storage drum is operated with a hand crank, the rocker should be pulled out in time to prevent the rocker from being thrown out and hurt people when the wire storage drum is rotated. When attaching or detaching the electrode wire, pay attention to prevent the electrode wire from getting stuck. The replaced waste wire should be placed in a prescribed container to prevent it from being mixed into the circuit and the wire feeding system, causing accidents such as electrical short circuits, contacts and wire breaks. Pay attention to prevent wire break and transmission collision due to the inertia of the package. For this reason, when the machine is stopped, press the “Stop” button as soon as possible after the storage drum is replaced.

7 Do not place flammable or explosive items near the machine to prevent accidents caused by sparks caused by insufficient supply of working fluid.

8 Before formal processing of the workpiece, make sure that the workpiece position is installed correctly to prevent collision of the wire rack and over-travel damage to rotating parts such as screw rods and nuts. For workbenches without overtravel limit, prevent overtravel fall accidents.

9 Remove the residual stress of the workpiece as far as possible to prevent the workpiece from bursting and hurting during the cutting process. The protective cover should be installed before processing.

10 Do not press the switch with wet hands or touch the power supply. Prevent conductive materials such as working fluid from entering the electrical parts. In the event of a fire caused by an electrical short circuit, cut off the power first, and immediately use a suitable fire extinguisher such as carbon tetrachloride. Do not use water for fire fighting.

11 When stopping, stop the high-frequency pulse power first, then stop the working fluid, let the electrode wire run for a period of time, and wait for the wire storage cylinder to reverse before stopping the wire. After the work is completed, turn off the main power, clean the workbench and fixtures, and lubricate the machine.

12 When inspecting **Wire Cut Machine Tool**, machine tool electrical appliances, pulse power, and control system, care should be taken to properly cut off the power to prevent electric shock and damage to circuit components.

13 Regularly check whether the protective grounding of the machine tool is reliable, pay attention to whether any parts are leaking, and try to use the electric shock switch. After turning on the processing power, do not touch the “bed” and “workpiece” at both ends of the power supply with a conductive tool behind your hand to prevent electric shock.

© NIMI NOT TO BE REPUBLISHED

Introduction of electrical discharge machine/die sinking machine electrodes

Objectives: At the end of this lesson you shall be able to
- **define EDM machine**
- **state the terminology of EDM**
- **state the principle of EDM machine**
- **state the application of EDM**
- **state the advantages of EDM**
- **list the type of EDM.**

EDM

The EDM machine, which stands for Electrical Discharge Machining, in the realon of modern manufacturing and precision engineering. It highlights how EDM is a cutting - edge technology that uses electricity to precisely carve and shape materials, especially metals.

This explains why EDM is important by emphasizing its ability to overcome machining challeges that traditional methods often struggle with. It mentions the EDM offers extreme precision and accuracy, making it ideal for applications requiring tight tolerance. It discusses the role of EDM in various industries, such as aerospace, automotive, medical device prodution and tool and die manufacturing, showcasing its wide range of applications.

This explains how EDM works, particularly throught he process of spark erosion, where electrical discharges create intense heat, melting and vaporizing a portion of the workpiece material. It mentions advancements in EDM technology and the emergence of different types of EDM machines tailored to specific tasks and workpiece materials (Fig 1)

Fig 1

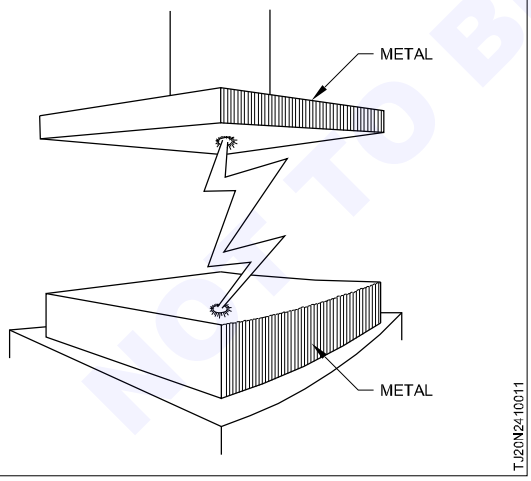

Principles of EDM

Major parts of EDM are shown in Fig 2

Principles of EDM Electrical Discharge Machining (EDM) is a controlled metal-removal process that is used to remove metal by means of electric spark erosion. In this process an electric spark is used as the cutting tool to cut (erode) the workpiece to produce the finished part to the desired shape. The metal-removal process is performed by applying a pulsating (ON/OFF) electrical charge of high-frequency current through the electrode to the workpiece. This removes (erodes) very tiny pieces of metal from the workpiece at a controlled rate. (Fig 3)

EDM spark erosion is the same as having an electrical short that burns a small hole in a piece of metal it

contacts. With the EDM process both the workpiece material and the electrode material must be conductors of electricity.

Fig 3

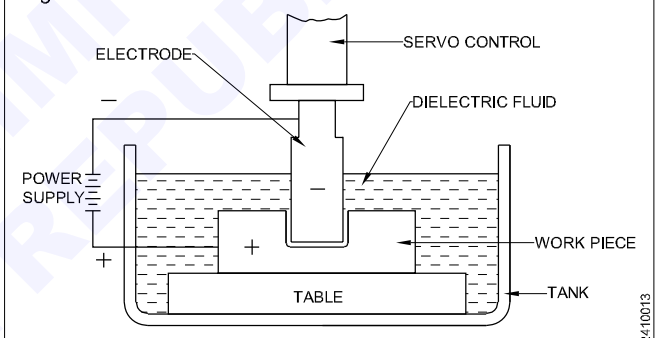

SCHEMATIC DIAGRAM OF EROSION MACHINE USING NEGATIVE POLARITY ELECTRODE

Applications of EDM (Electrical Discharge Mahcining) machine

Electrical Discharge Machining (EDM) is a versatile manufacturing process that finds applications in a wide range of industries due to its ability to achieve exceptional precision and accuracy. EDM machines are employed in various applications where traditional machining methods may be impractical or insufficient. Here are some key applications of EDM machines.

Tool and Die Manufacturing

EDM is extensively used for producing intricate and complex molds, dies, and tooling components with high precision and intricate details. This is crucial in industries like injection molding, forging, and stamping.

Aerospace Industry

EDM is employed in the aerospace sector to manufacture critical components such as turbine blades, jet engine parts, and aircraft structural components that require close tolerances and high-quality surface finishes.

© NIMI NOT TO BE REPUBLISHED

Fig 2

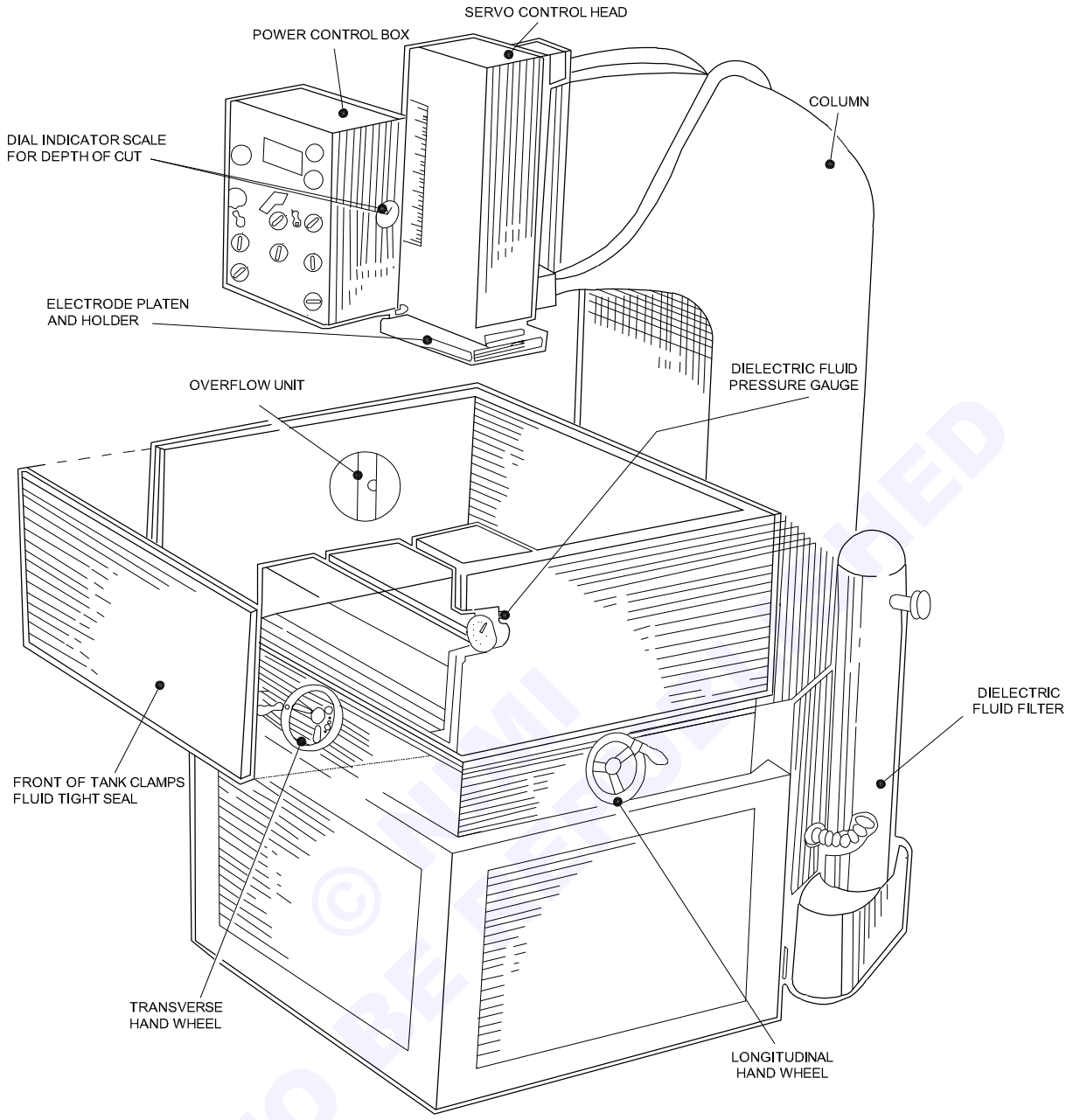

© NIMI NOT TO BE REPUBLISHED

Medical device manufacturing

EDM is used to produce medical implants, surgical instruments, and dental prosthetics. Its precision is invaluable for creating components that must fit perfectly and ensure patient safety.

Automotive industry

EDM plays a role in manufacturing precision parts for the automotive industry, including gears, transmission components, and fuel injection nozzles, which require intricate shapes and close tolerances.

Electronics industry

The production of microelectronic components, such as microchips, PCBs (Printed Circuit Boards), and Micro Electro Mechanical System (MEMS), relies on EDM for its ability to work with very small and delicate parts.

Jewelry manufacturing

EDM machines are used to create intricate and custom-designed jewelry pieces with precise detailing. Jewelers can achieve complex shapes and patterns not easily attainable with traditional methods.

Metal working and prototyping

EDM is used in metal working and prototyping to create precision parts, prototypes, and small-batch production runs. It is particularlyuseful when working with exotic materials that are difficult to machine conventionally.

Mould and Die Repair

EDM machines are used for mould and die repair by removing defects, such as cracks or worn-out area, and restoring the tooling to its original dimensions. there by extending its lifespan.

Cutting hard and heat-resistant materials

EDM is an effective method for cutting hard and heat-resistant materials, including tungsten carbide, tool steels, and super alloys, where conventional machining methods would be impractical.

Aesthetic engraving and texturing

EDM can be employed for artistic purposes, such as engraving and texturing on metal surfaces to create aesthetically pleasing designs and patterns.

Small hole drilling

EDM hole drilling is used for creating precise small - diameter holes in materials like aerospace alloys and medical implants, where conventional drilling methods may not be suitable.

Extrusion and Forming Dies

EDM is used to produce intricate extrusion and forming dies for industries like aluminium extrusion and sheet metal forming.

Advantages of EDM

Conventional EDM machines can be programmed for vertical machining, orbital, vectorial, directional, helical, conical, rotational, spin and indexing machining cycles. This versatility gives Electrical Discharge Machines many advantages over conventional machine tools.

- Any material that is electrically conductive can be cut using the EDM process.
- Hardened workpieces can be machined eliminating the deformation caused by heat treatment.
- X, Y, and Z axes movements allow for the programming of complex profiles using simple electrodes.
- Complex dies sections and molds can be produced accurately, faster, and at lower costs.
- The EDM process is burr-free.
- Thin fragile sections such as webs or fins can be easily machined without deforming the part.

Types of Electrical Discharge Machining

Electrical Discharge Machining (also known as EDM or spark erosion) is commonly used to produce molds and dies, to drill small, burr free holes and to make prototype quantities of contacts for the aerospace and electronic markets. Two types of EDM are employed: conventional (ram) EDM and traveling wire (TW) EDM. Effectiveness of EDM is not dependent on the strength or hardness of the work piece, and it is used to machine copper beryllium in its age hardened state with no effect on the alloy's strength and no further heat treatment is required.

Conventional EDM

EDM is a thermoelectric process which erodes material from the work piece by a series of discrete sparks between it and the electrode.

Conventional EDM, shown in Figure 1, utilizes a copper or graphite electrode configured like the cavity desired in the work piece. Machining speeds are determined by the area of the work piece, the type of material, and the machining conditions. Since copper beryllium exhibits high electrical conductivity, machining rates are typically 20% lower than those of tool steels. Therefore, prior to EDM, conventional machining is recommended where appropriate. When EDM'ing copper beryllium, it is suggested that the equipment parameters be first set at the machine manufacturer's recommendations for copper and then adjusted accordingly to produce the desired results.

Compared to steel, copper beryllium must be EDM'ed with low amperage and high voltage to produce acceptable results. The polarity of the solid state power supply can be either electrode positive or negative. Electrode negative polarity produces the highest metal removal rates and a rougher surface. Recently, it has become more common to use electrode positive polarity to increase the work toelectrode wear ratio while providing a smoother surface. A dielectric fluid is required in all EDM operations. The dielectric acts as a spark conductor, a coolant, and a flushing medium that carries away swarf. For conventional EDM the most common dielectric fluid used is light petroleum based oil.

The surface texture of EDM'ed copper beryllium resembles overlapping, small craters that exhibit no directionality. The surface roughness can range from 8 microinch (0.2 micrometer) Ra for finishing operations, to 500 microinch (13 micrometer) Ra for roughing operations. Recast and heat affected layers occur on the order of 0.0001 to 0.005 inch (0.002 to 0.1 mm) and should be removed for fatigue sensitive applications. Shot peening provides a smoother surface and improves fatigue life, but abrasive and electrochemical methods are required to remove the recast and underlying heat affected layer. However, for most applications, removal of these softer layers is not necessary.

Fig 4

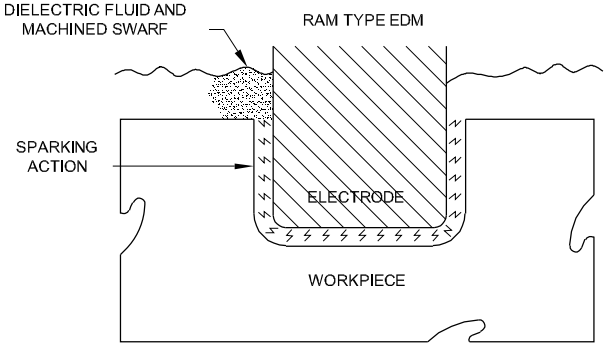

© NIMI NOT TO BE REPUBLISHED

Electrodes

Objectives: At the end of this lesson you shall be able to
- **state the electrodes**
- **identify the materials of electrode**
- **state the advantages and disadvantage of electrodes**
- **state the dielectric fluid**
- **state the circulation of di-electric fluid**
- **state the spark gap**
- **state the flushing**
- **state the filtering.**

Electrodes

The EDM machining process removes material from a workpiece, or piece of material being worked on, via electric discharge between two electordes, or conductors used to make contact with part of a circuit. The electrodes are separated by a dielectric liquid -- a liquid that acts as an insulator. One electrode is the tool electrode, and the other electrode is the workpiece electrode. When distance between these two electrodes decreases, the dielectric liquid breaks down, allowing current tto flow between the electrodes. This vaporizes material from the electrodes in a controlled fashion, enabling the production of a desired workpiece shape.

Materials of Electrodes

Electrode materials must give good electrical and heat conductivity, low wear rate and be readily machineable, or economic to produce.

Table showing advantages and disadvantages of some electrode materials.

Electrode Material	Advantages	Disadvantages
Graphite (Positive Polarity can be used when roughing	Easily machined. Easily attached to tool holder by screws and/or adhesive Very good metal removal rate. Excellent wear ratio. Dense graphite grades give good Surface finish.	Needs good flow of dielectric fluid or vibration or periodic withdrawal by means of timer. Not generally used for machining carbides-tendency to arcing Dielectric fluid soaked graphite cannot be cemented for re-use. Brittle Not recommended for use with relaxation power supply when finishing.
Copper	Produces excellent surface finish. Can be used in spraying technique.	More expensive than graphite. Clogs grinding wheels.

Dielectric fluid : The dielectric fluid perfoms the following functions.

1 Helps to initiate the spark between the electorde and work.

2 Confines the spark to the narrow channel.

3 Serves as an insulator between the electrode and the work.

4 Flushes away the metal particles and prevents shorting.

5 Acts as a coolant for the Electrode and work.

The dielectric fluid must be able to ionise (Vapourise) and be ionised rapidly. It should have low viscosity so that it can be pumped through narrow machining gaps. The common dielectric fluids are

1 light lubricating oils

2 transdormer oils

3 silicon based oils

4 kerosene

5 deionised water

During the EDM process the workpiece and the electrode are submerged in the dielectric oil, which is an electrical insulator that helps to control the arc discharge. The dielectric oil, that provides a means of flushing, is pumped through the arc gap. This removes suspended particles of workpiece material and electrode from the work cavity.

Flushing One of the most important factors in a successful EDM operation is the removal of the metal particles (chips) from the working gap. Flushing these particles

© NIMI NOT TO BE REPUBLISHED

out of the gap between the workpiece to prevent them from forming bridges that cause short circuits.

Circulation of dielectric fluid

1 Down through the electrode (Fig 1)

Fig 1

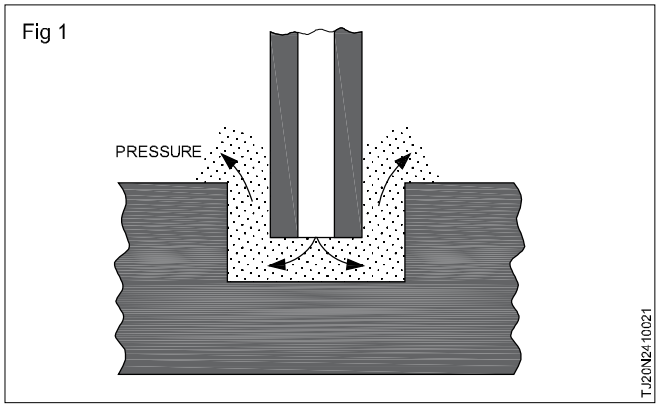

2 Up through the workpiece (Fig 2)

This method is used for flushing through holes.

Fig 2

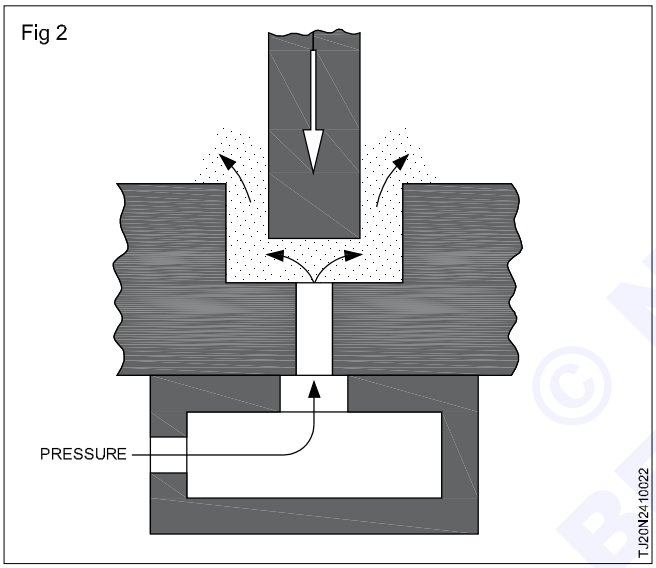

3 Vacuum flow (Fig 3)

Used when the clearance between the electrode and work is smaller compared to above cases.

Fig 3

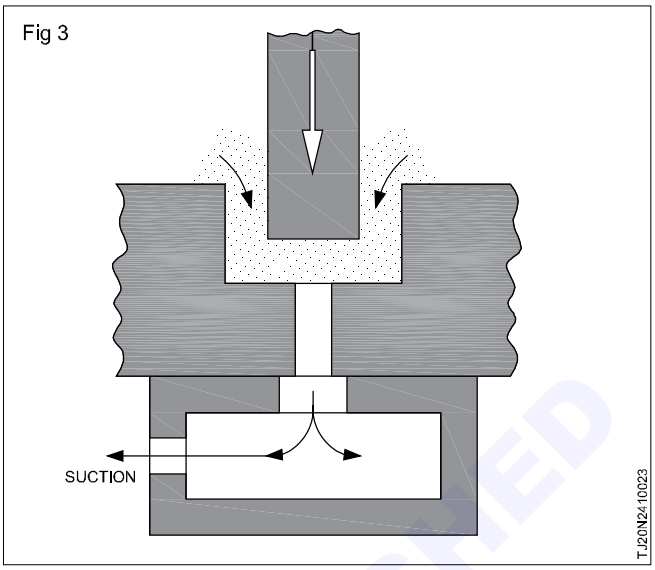

4 Vibration (Fig 4)

Pumping and sucking action causes the dielectric to disperse chips from the spark gap. This method is used for very small holes, deep holes and blind cavities.

Spark gap

The spark gap is the distance between the electrode and the workpiece during the machining operation. It is also referred to as overcut.

Fig 4

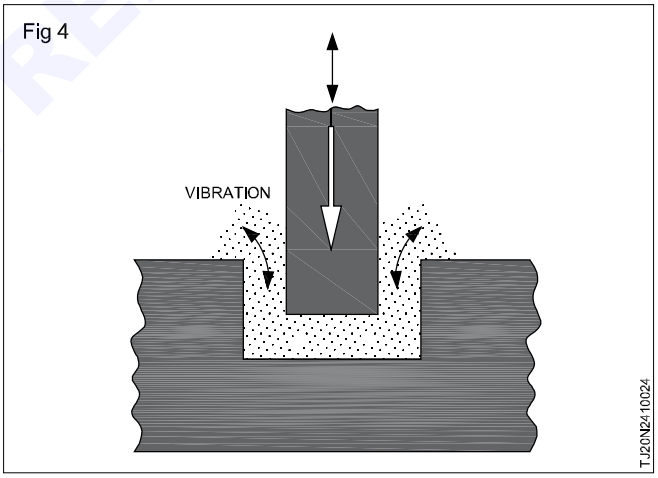

© NIMI NOT TO BE REPUBLISHED

Introduction of wire EDM

Objectives: At the end of this lesson you shall be able to
- **introduction of wire EDM**
- **what is EDM wire machining**
- **list the major parts of wire EDM machine**
- **state the principle of wire EDM**
- **state the application of wire EDM**
- **differentiate between wire EDM and conventional EDM**
- **state the advantages and disadvantages of EDM**
- **state the wire electrode material and dielectric fluid.**

Introduction of wire EDM

This discusses the wire electrical discharge machining (Wire EDM) machine and its significance in precision manufacturing . It highlights wire EDM as a cutting edge maching process that has revolutionized material shaping especially with metals.

This provides key elements of a wire EDM machine introduction focusing on its fundamental principles, accuracy, precision, material versatility, automation, wire handling and reduced tool wear.

It explaints why wire EDM is essential by emphasing its ability to achieve exceptional precision and surface finish quality, challenging traditional machining methods.

It mentions that wire EDM can work with a wide range of conductive materials, making it suitable for various industries.

It describes the handling of the wire, typically wound on spools and continuously fed through the workpiece. and the importance of precision and speeed in wire movement. *It highlight the absence of tool wear in wire EDM due to no physical contact with the workpiece, explaining how this benefit reduces the need for frequent tool changes.

Types of wire EDM

Standard wire EDM (sinker EDM)

This is the most common type of wire EDM machine. It uses a continuously fed wire electrode, typically made of brass or tungsten, to create precise cuts in the workpiece.

Aerospace and autmotive industries often use five-axis wire EDM for producing critical components.

Wire EDM for large workpieces

Some wire EDM machines are specifically designed to accommodate large workpieces and heavy materials. These machines have larger work envelopes and robust structure to handle the demand of large - scale manufacturing.

CNC wire EDM

Many wire EDM machines regarless of their type, are equipped with computer numerical control (CNC) systems, CNC wire EDM machines offer automated and programmalble operations, allowing for precise and complex cuts with ease.

Wire Electrical Discharge Maching (Wire EDM) is a precise and versatile machining process used in various industries. Like any technology, it has its advantages and disadvantages. Here's an overview of the pros and cons of using Wire EDM machines.

What is EDM Wire Machining

Wire EDM, or electrical discharge machining, is a high-precision method for cutting nearly any electrically conductive material. A thin, electrically-charged EDM wire held between upper and lower mechanical guides forms one electrode, while the material being cut forms a second electrode. Electrical discharge between the wire and the workpiece creates sparks that rapidly cut away material. Both the wire and the workpiece are submerged in deionized water, which flushes away cutting debris.

As the charged wire never makes physical contact with the workpiece in EDM machining, there are no cutting forces involved, making it possible to manufacture extremely small and/or delicate parts. Parts that require levels of accuracy and intricacy that traditional machining cannot achieve can easily be produced via wire EDM.

Wire cut EDM machine is consist of machine bed, column, working table, wire running system, taper unit, working solution recycle system, Z axis, water-proof cover. (Fig1)

CNC high speed feed wire cut EDM machine is composed of machine bed, column, working table, wire running system, taper unit, working solution recycle system, Z axis, water-proof cover. (Fig 1)

Major parts of wire EDM machine bed and coloumn (Fig 2)

Machine bed and column are two basic structure wire cut EDM machine it adopt large "T" shape machine bed, "C" structure column, HT250 casting with resin sand casting technology, compact structure, strong rigidity of whole machine. Column is fixed on machine bed as constructional element, machine bed hold whole machine as a base. Machine bed and column had been age treated to remove inner stress, to reduce deformation. Machine bed is strong enough take whole machine, good ability of anti-vibration, less thermal deformation. Manufacturing and assembly of machine bed and column must meet strict requirement of geometric and mechanical accuracy.

© TVET

Fig 1

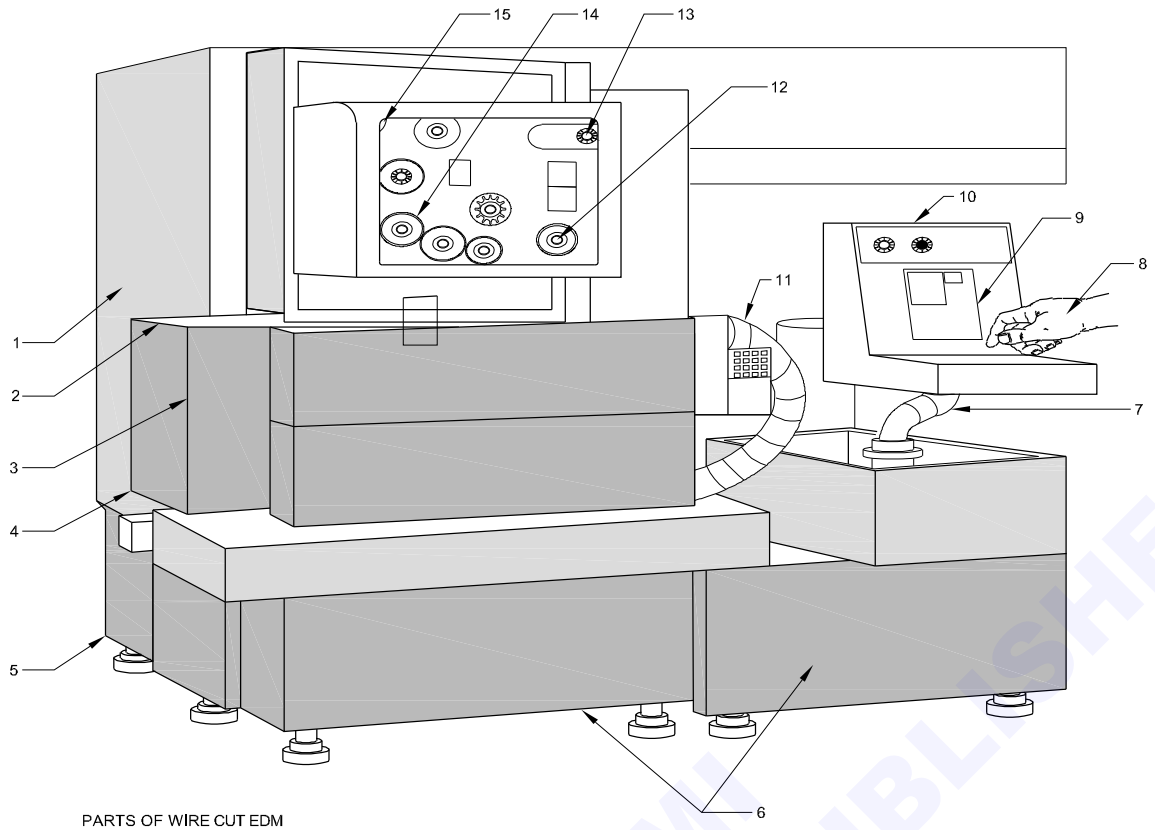

PARTS OF WIRE CUT EDM

1.COLUMN	6.DIELETRIC FLUID TANK	11.HAND HELD REMOTE CONTROL
2.WIRE GUIDE ARM	7.AC SERVO MOTOR	12.COMPACT WIRE CHOPPER
3.WORK TABLE	8.FEED INPUT / PROGRAM FEED	13.WIRE SPOOL UNIT
4.TRANSPARENT SAFETY GUARD	9.LED TOUCH PANEL	14.AUTOMATIC WIRE THREADING (AWT)
5.BASE	10.CNC CONTROLLER	15.DE-COILER UNIT

EDM MECHINE

TJ20N2410211

© NIMI NOT TO BE REPUBLISHED

Fig 2

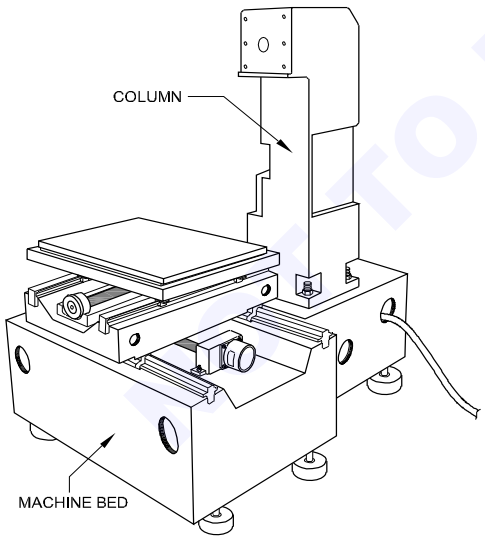

TJ20N2410212

Working table

Working table supports and holds workpiec. Its movement is controlled by two stepper motors servo motors of closed-loop control wire cut EDM). The while wire cut EDM machining is finished by relative movement between working table and electrode wire. The working table of high speed feed wire cut EDM machine includes X and Y axis slides, adopts precious linear guide way and precious ball screw as moving components. XY cross structure had been used for decades, the mechanical rigidity and controllability of Cross structure had been proved and widely accepted, its design and manufacturing technology is pretty mature today, widely used for many machine tools. (Fig 3) of cross structure XY axis slides.

Fig 3

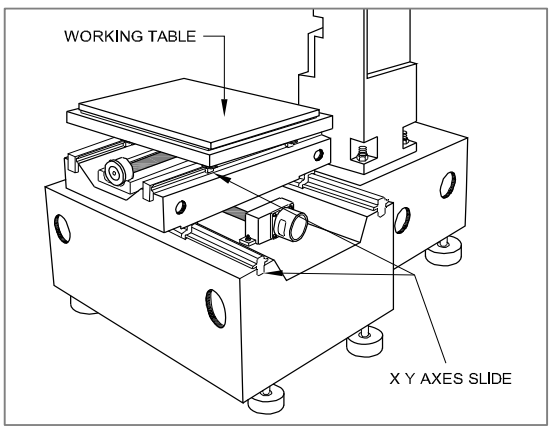

TJ20N2410213

Wire running system (Fig 4)

Wire running system controls electrode wire feed at a certain speed and tension, electrode wire feed reciprocally, and coil electrode wire on the wire drum without overlap, in Fig 4 part no.1-5 is diagram of wire running system of high speed feed wire cut EDM machine, this system mainly includes guide, wire drum, power contact, tension control units.

1- Main guide; 2-electrode wire; 3- auxiliary guide; 4-linear guide; 5-guides of tightening; 6-slide block; 7- slide of linear guide way; 8-fixed pulley; 9-wire drum; 10-rope; 11-weight drop; 12-electical block(power contact)

Fig 4

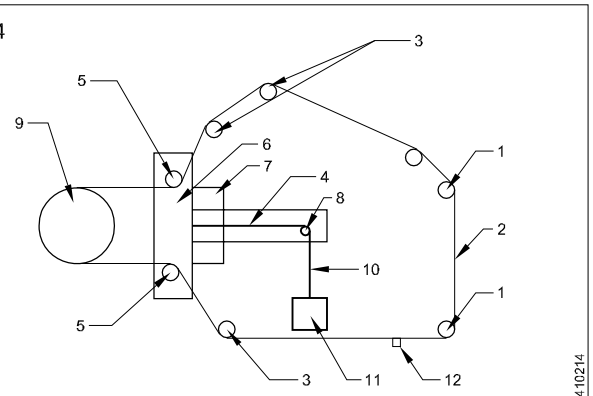

WIRE RUNNING SYSTEM

Wire cut EDM machine is working, guides need to bear fast feeding speed of electrode wire, normally use rolling bearing as guide. There is strict accuracy requirement of “V” groove of guide the radius of arc at the bottom of groove must be smaller than radius of electrode wire to avoid transverse movement of electrode wire. Basically, reduce the weight of guide at the condition of that guide has met required strength. Beside, the working surface should have enough hardness and low surface roughness.

Wire drum is one of key units to ensure electrode feeding quickly and where to store electrode wire. (Fig 5) Wire drum does axial moving while turning at high speed, this way, it can coil electrode wire on the wire drum evenly and tidily without overlap, wire drum is able to turn clockwise and counterclockwise to realize wire feed reciprocally. In order to ensure wire drum turn smoothly, inverter was brought into wire cut EDM machine to control the speed of wire drum turning.

Fig 5

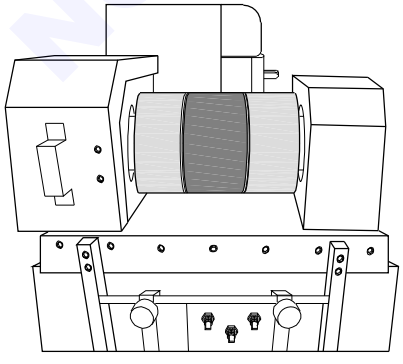

Wire cut EDM machine, electrode wire obtain cathode electricity from power feed contact (electrical block), the contact resistance of power feed contact must be very small, otherwise, power feed contact touch the fast feeding for long time, so it must be wear resistant, normally, hard alloy, with good wear resistance and conductivity, is chosen as material of power feed contact.

During process of wire cut EDM machining (Fig 6) electrode is getting loose under impact of direction change, discharging, this situation will affect machining accuracy and surface finish. If there is no tension control unit, it is necessary to tighten electrode manually, when cut large thickness workpiece, cutting quality will getting worse. At present, some high rank CNC high speed feed wire cut EDM machine has weight drop tension control system; it can keep constant tension, save a lot work of operator and increase cutting quality obviously.

Fig 6

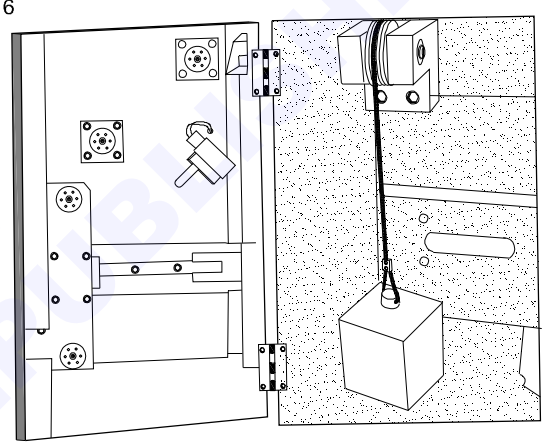

Taper unit

Taper cutting is realized through taper unit (Fig 7).the move axis of taper unit is U and V axis. Usual taper cutting principle is central axis of down guide doesn’t move, fixed, up guide is driven by stepper motor U and V axis and move in four directions. Working table and taper unit are moving simultaneously to realize some angle of electrode.

Fig 7

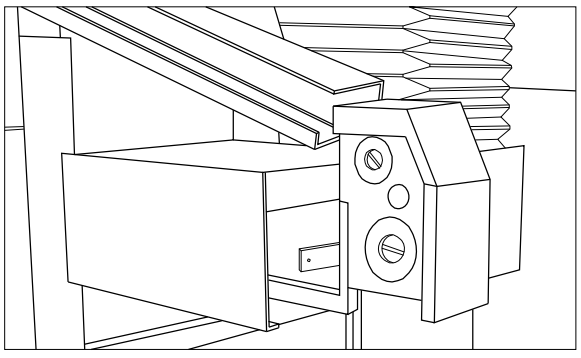

NOT TO BE REPUBLISHED

Working solution recycle system

Pump sucks working solution out of tank, then working solution goes through filter to get rid of unclean stuff; and filtered working solution goes into up pipe and then up and down nozzle separately, then go back to tank through filter net. It is necessary to change working solution and filter if they affect cutting quality

Principle of wire cut EDM

Wire cut EDM machine puts impulse voltage between electrode wire and workpiece through impulse source, controlled by servo system, to get a certain gap, and realize impulse discharging in the working liquid between electrode wire and workpiece. Numerous tiny holes appear due to erosion of impulse discharging, and therefore get the needed shape of workpiece. (Fig 8)

Fig 8

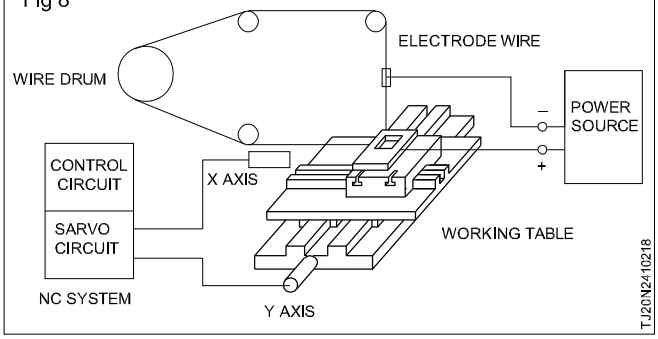

Electrode wire is connecting to cathode of impulse power source, and workpiece is connecting to anode of impulse power source. When workpiece is approaching electrode wire in the insulating liquid and gap between them getting small to a certain value, insulating liquid was broken through; very shortly, discharging channel forms, and electrical discharging happens. And release huge high temperature instantaneously, up to more than 10000 degree centigrade, the eroded workpiece is cooling down swiftly in working liquid and flushed away. (Fig 9)

Fig 9

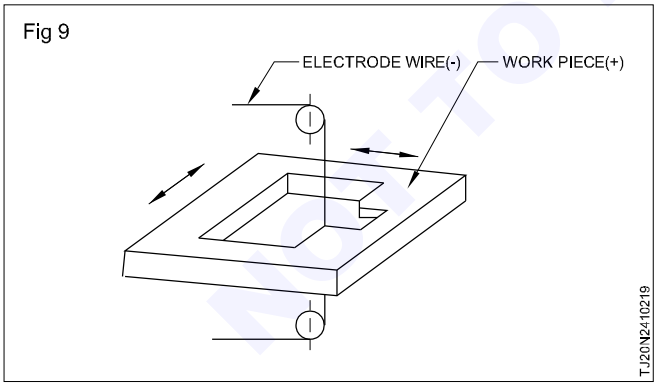

Three basic conditions that wire cut EDM work correctly

1 The gap between electrode wire and workpiece should be certainly maintained in a required range. Within this range, not only impulse power can break through insulating liquid to create spark discharging, but also the eroded workpiece can be flushed away after discharging process. If gap is too big, insulating liquid can't be break through,, and there will be no spark discharging; if gap is too small, short circuit is easy to happen, no spark discharging neither.

2 The procedure should happen in the liquid with insulate capacity, for example saponification and deionized water, the liquid could act as medium of discharging channel and provide cooling and flushing.

3 Electrical discharging should be short time impulse discharging, as with short discharging time, the released heat won't affect inside material of workpiece, and limits energy to a tiny field and keep characteristics of cool machining of wire cut EDM machine.

Application of wire cut EDM machining (Fig 10)

Fig 10

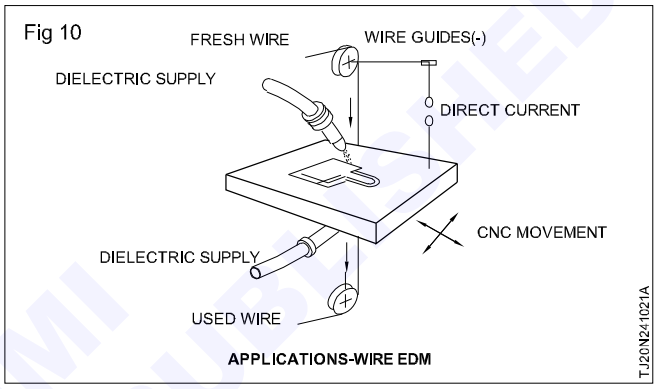

Wire cut EDM machining is mainly used to process various punch die, plastic mould, Powder metallurgy mould and etc, which have 2D and 3D faces combined, or components. It can also cut various sample plate, magnetic steel, Silicon Steel Sheet, semi-conductive material or precious metal. Further more, it is able to do tiny machining, abnormal shape groove or machining of standard defect of sample parts, widely used in electrics, precious machine tools, light industry, army industry and so on.

1 Mold machining

Wire cut EDM is widely used to machine various moulds, such as punch die, squeezing die, powder metallurgy mould, bend mould, plastic mould. Among these different kind moulds, cutting punch die take a great share, to precious punch die machining, wire cut EDM machining is a indispensable technology. By adjusting different compensation value while programming, wire cut EDM can cut terrace die, punch plate, stripper plate and etc, it is easy to meet the requirement of mould fitting clearance and machining accuracy.

Advanced punch dies have characteristics of complicated structure, big producing difficult, high accuracy, long life, high efficiency and low consumption ratio of material. These new advanced technology of mold also brings continuous development of wire cut EDM technology,

NOT TO BE REPUBLISHED

Mechanical parts machining

To mechanical parts machining, wire cut EDM is suitable to machine parts with large varieties and small quantity, special material which is not easy to processed by conventional machines, special gear, forming cutting tools, various shape holes.

When try to make new product, use wire cut EDM machine to cut parts out of workpiece, there is no need to make moulds, producing time is shortened obviously, at the same time, cost is reduced. Besides, as it is easy to adjust electrical parameters of wire cut EDM, so it is possible to overlap thin plate and cut together to increase machining efficiency. And wire cut EDM machine can also machine parts with tiny gap, narrow slit and complex shape.

Differences between Wire Cut and Conventional EDM

There are two main types of EDM: conventional and wire. Conventional EDM, as described above, uses a tool to disperse the electric current. This tool, the cathode, runs along the metal piece, the anode, and the electrical current reacts to melt or vaporize the metal. As a result of the dielectric fluid, what little debris produced washes away from the piece. Wire EDM or WCEDM discharges the electrified current by means of a taut thin wire, which acts as the cathode and is guided alongside the desired cutting path, or kerfs. A dielectric fluid submerges the wire and workpiece, filtering and directing the sparks. The thin wire allows precision cuts, with kerfs as wide as three inches and a positioning accuracy of +/- 0.0002". This heightened precision allows for complex, three dimensional cuts, and produces highly accurate punches, dies and stripper plates.

Wire cut EDM equipment is run by computer numerically controlled (CNC) instruments, which can control the wire on a three-dimensional axis to provide greater flexibility. Whereas conventional EDM cannot always produce tight corners or very intricate patterns, wire EDM's increased precision allows for intricate patterns and cuts. Additionally, wire EDM is able to cut metals as thin as 0.004". At a certain thickness, wire EDM will simply cause the metal to evaporate, thereby eliminating potential debris. The wire of a WCEDM unit emits sparks on all sides, which means the cut must be thicker than the wire itself. In other words, because the wire is surrounded by a ring of current, the smallest and most precise cutting path possible is the added diameter of the ring and wire; technicians easily account for this added dimension. Manufacturers continue to produce thinner and thinner wires to allow for smaller kerfs and even finer precision.

Wire Electrode Materials

Materials like steel are difficult to cut or mould without adding heat first. Wire EDM makes it possible to cut steel through and other materials without applying heat. EDM machining works best with materials that conduct electricity, such as

- Brass
- Copper
- Molybdenum
- Bronze
- Tungsten
- Carbon steel
- High alloy
- Stainless steel
- Titanium

The wire electrode for WEDM is usually made of copper, brass, or molybdenum in a diameter ranging from 0.01 to 0.5 mm. Stratified copper wire coated with zinc brass with diameter of 0.25 mm is often used.

Dielectric fluid

Deionized water is always used as a dielectric fluid in WEDM to provide a larger gap size and lower wire temperature in order to reduce the wire rupture risk. This fluid also serves to flush debris from the gap and thus helps maintain surface quality.

Advantages of wire EDM

Wire EDM is renowned for its exceptional precision and accuracy, achieving micron - level precision for intricate and complex parts with tight tolerance.

It can be used with a wide range of conductive materials, including metals, alloys, and exotic materials, making it applicable across diverse industries such as a aerospace and medical.

As a non-contact machining process, Wire EDM eliminates physical tool-to-workpiece interaction, ensuring consistent part quality and reducing maintenance due to the absence of tool wear

Wire EDM excels at creating complex and intricate shapes that may be challenging to achieve using traditional machining methods.

It generates minimal heat during machining, reducing the risk of material distrortion or stress, which is crucial when working with heat-sensitive materials.

Wire EDM produces find surface finishes, often eliminating the need for additional finishing operations.

Many wire EDM machines are equipped with CNC control sytems, enabling automated and highly programmable operations, leadin to improved efficency and reduced labor costs.

The heat generated is localized to a tiny area near the wire minimizing the heat-affected zone in the workpiece and preserving material properties.

Disadvantages of wire EDM

Wire EDM is comparatively slow, which may not be ideal for high-volume production scenaries where faster maching processes are preferred.

© NIMI NOT TO BE REPUBLISHED

Programming wire EDM machines for intricate shapes and multi-axis cuts can be time-consuming and requires skilled operators.

Contrinuous use of wire electrodes can lead to high consumption and associated cost, especially when maching thick materials.

Achieving a significant taper angle can be challenging particularly on tall workpieces, which can limit design possibilities.

Wire electrodes are prone to breakage resulting in downtime and increased operational costs.

The dielectric fluids used in submerged wire EDM may pose environmental challenges if not managed properly.

Overcutting, where the wire erodes more material than intended, can occur if the process is not carefully controlled.

Wire EDM machines, especially high - precision models with advanced feature, can be expensive in purchase and maintain.

© NIMI
NOT TO BE REPUBLISHED

Basic Design of Guide Plate Tool

Objectives : At the end of this lesson you shall be able to
- **make component drawing**
- **make the strip layout**
- **calculate size of die and punch**
- **calculate cutting work.**

Component: Make component drawing as per the size (Fig 1). Thickness 3.2mm

Fig 1

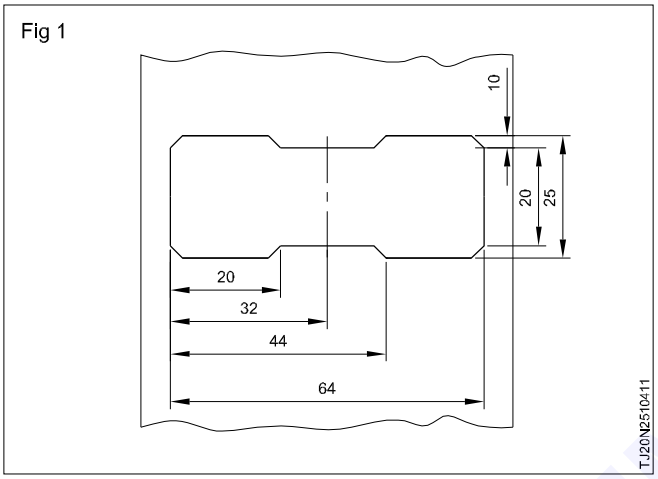

Strip layout: In designing part to blanked from strip material, economical stock utilization is to high importance. The goal should be at least 75% utlilzation a simple scrap strip layout is shown in (Fig 2).

Fig 2 Single scrap strip layout, B is the space between parts and edge of strip; L is the length of the part, H is the part width, T is specified thickness of material and W- width of strip.

Fig 2

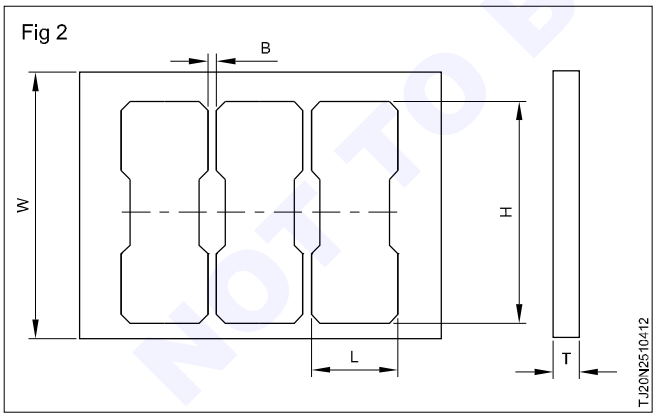

Die Set Selection

A commercially available standardized two-post die set with 150 mm overall dimensions side-to-side and front-to-back allows the available 76 mm. wide stock to be fed through it. It is large enough for mounting the blanking punch on the upper shoe (with the die mounted on the lower shoe) for producing the blank shown in Fig 1, since the guideposts can be supplied in lengths of from 100 to 225 mm.

Since the stock, in this case was available only in a width of 76 mm the length of the blanked portions extended across the stock left a distance between the edges of the stock and the ends of the blank of 6 mm or twice the stock thickness; this allowance is satisfactory for the 3.2 mm stock. (Fig 3)

Fig 3

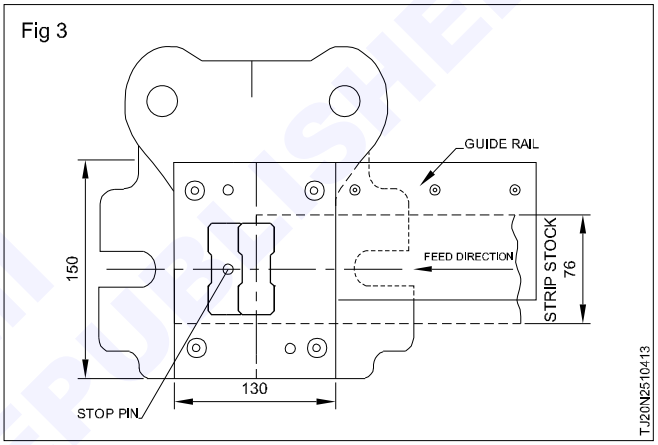

1.2 mm. thick SAE 1020 steel to be blanked from 76 mm. stock. Part to be blanked.

Die Block Design

By the usual ‘Thumb-rule’ method previously described, die block thickness (of tool steel) should be a minimum of 20 mm for a blanking perimeter up to 75 mm and 25 mm for a perimeter between 75 and 100 mm. For longer perimeters, die block thickness should be 32 mm. Die blocks are seldom thinner than 2.2 mm finished thickness to allow for grinding and for blind screw-holes. Since the perimeter of the blank is approximately 178 mm a die block thickness of 38 mm was specified, including a 6 mm grinding allowance.

There should be a margin of 32 mm around the opening in the die block; its specified size of 150 x 150 mm allows a margin of 45 mm in which four M10 cap screws and dia. 10 mm dowels are located at the corners 20 mm from the edges of the block.

The wall of the die opening is straight for a distance of 3.2 mm (stock thickness); below this portion or the straight, an angular clearance of 1½° allows the blank to drop through the die block without jamming. The dimensions of the die opening are the same as that of the blank; those of the punch are smaller by the clearance (6 per cent of stock thickness, or 2 mm), which result in the production of blanks to punch (and die) size. (Fig 4&5)

© SIMI NOT TO BE REPUBLISHED

Fig 4

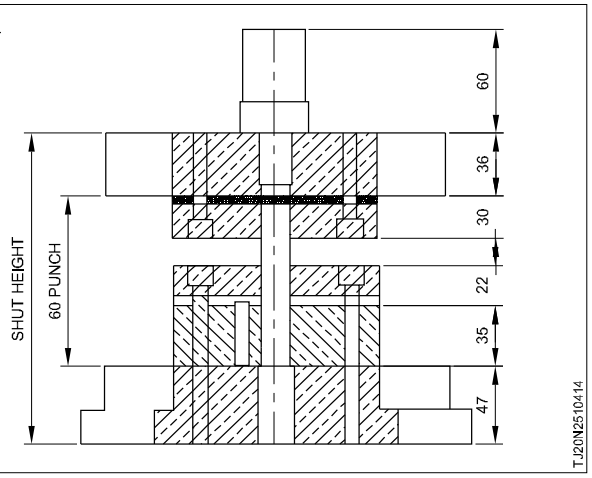

Fig 5

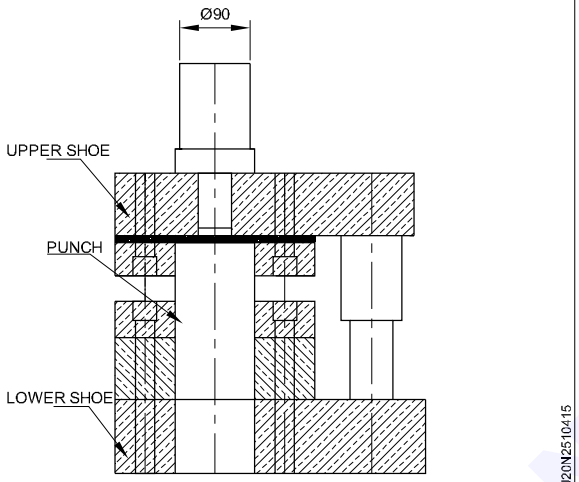

The top of the die was ground off a distance equal to stock thickness (Fig 6 to 7) with the result that shearing of the stock starts at the ends of the die and progresses towards the center of the die, and less blanking pressure is required than if the top of the die where flat.

Punch Design

The shouldered punch (57 mm) long is held against a 6 mm thick hardened steel backup plate by a punch plate 20 mm thick) which is screwed and doweled to the upper shoe. The shut height of the die can be accommodated by a 32-ton (JIC Standard) open-back inclinable press, leaving a shut height of 240 mm. For the conditions of this case study, shear strength S = 42 kg/mm2, blanked perimeter length L = 178 mm approx. and thickness T = 3.2 mm.

From the equation P = SLT

The pressure P = 42 kgs × 178 mm × 3.2 = 23.92 tons.

This value is well below the 32-ton capacity of the selected press.

The shut height is 178 mm less the 1.6 mm travel of the punch into the die cavity.

Stripper Design

The stripper that was designed is of the fixed type with a channel or slot having a height equal to 1.5 times stock thickness and a width of 80 mm to allow for variations in the stock width of 75 mm. The same screws that hold the die block to the lower shoe fasten the stripper to the top of the die block.

Fig 6

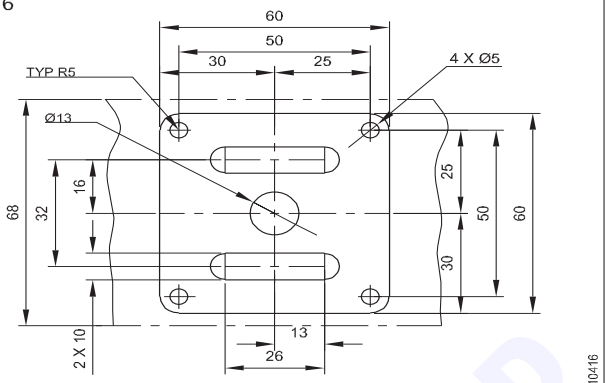

3.2 mm. thick SAE 1020 steel to be blanked from 76mm stock

If, instead of 3.2 mm stock, thin (0.8 mm) stock were to be blanked, a spring-loaded stripper would firmly hold the stock down on top of the die block and could, to some extent, flatten out wrinkles and waves in It.

A spring-loaded stripper should clamp the stock until the punch is withdrawn from the stock. The pressure that strips the stock from the punch on the upstroke is difficult to evaluate exactly. A formula frequently used is,

$$P_s = 2.5 \times L \times t \text{ kgs.}$$

Where P_s = stripping pressure, in kgs.

L = perimeter of cut, in mm.

t = stock thickness, in mm.

Spring design is beyond the scope of this book; die spring data are available in the catalogues of spring manufacturers.

Stock stop pin

The stop pin pressed in the die block is the simplest method for stopping the hand-fed strip. The right-hand edge of the blanked opening is pushed against the pin before descent of the ram and the blanking of the next blank. The 4-8 mm depth of the stripper slot allows the edge of the blanked opening to ride over the pin and to engage the right-hand edge of every successive opening.

The design of various types of stops adapted for manual and automatic feeding is covered in a preceding discussion.

Scrap - Strip Trip Layout for Blanking

Evoluton of a progressive blanking die

(Figs 4 to 6), gives the blank dimensions of a linkage case cover of cold rolled steel, stock size 3.2 x 60 x 60 mm. Production is stated to be 200 parts made at one setup, with the possibility of three or four runs per year.

Step 1: Part Specification

1 The production is of medium class; therefore a second-class die will be used.

NOT TO BE REPUBLISHED

2 Tolerances required: Except for location of the slots, all dimensions are in fractions. The slot locations, though specified in decimals, are not very close. Thus a compound die is not necessary; a two or three-station progressive die will be adequate.

3 Type of press to be used: Available for this production are presses of 5-ton, 8-ton, or 10-ton capacity, with a shut height of 175 or 200 mm.

4 Thickness of material: Specified as 3.2 mm standard cold rolled steel.

Step 2: Scrap-Strip Development

From the production requirements, a single-row strip will sufficiant. After several trials, the scrap strip shown in Fig 7 was decided upon. Owing to the closeness of the holes it was decided to make a four-station die.

3.2 mm. thick SAE 1020 steel to be blanked from 76mm. stock.

The scrap strip would be fed into the first finger stop, and the center hole would be pierced. The strip would then be moved in to the second finger stop, and the two holes would then be pierced. At the third stage and third finger stop, a pilot would locate the strip and the four corner holes would then be pierced. At the fourth and final stage, a piloted blanking punch would blank out the finished part.

Step 3: Press Tonnage

It is now in order to determine the amount of pressure needed. Only the actual blanking in the fourth stage need be calculated, since the work in the first three stages will be done by stepped punches.

From Table, the shear strength 'S' of cold rolled steel is 40 kgs/mm^2. The length 'L' of the blanked perimeter equals 60 x 4 = 240 mm. The depth of cut (stock thickness t) equals 3.2 mm. From the equation **P = S L t**

P = 40 kgs/mm^2 x 240 mm x 3.2 mm = 30,720 kgs.

Or 30.7 tons.

This tonnage is greater than can be handled by the available presses. To lower the pressure, shear is ground on the blanking punch to reduce the needed pressure by on third. This, 1 x 30.7 = 30.7 - 10.2 = 20.5 tons. A punch press of 25-ton capacity would do, but there is report available only a 30-ton press with a 190 mm shut height and a 50 mm stroke. This press is selected. The bolster plate is found to be 300 mm deep, 140 mm from centerline of ram to back edge of bolster, and 600 mm wide. Shank diameter is 64 mm.

Step 4: Calculation of the Die

1 **The die:** The perimeter of the cut equals 240 mm and therefore the thickness of the die must be 25 mm. The width of the scarp-strip opening is 60 mm with 32 mm extra material on each side of the opening, it will be 60 mm + 64 mm = 124 mm or 130 mm width. The distance from the left side of the opening in stage 4 to the edge of the opening in stage 1 equals 3C + 30 + 6 = 192 + 30 + 6 = 228 mm and plus 62 mm = 290 mm or 296 mm long. Therefore the die should be 25 x 130 x 296 mm long.

2 **The die plate:** As a means of filling in between the die and the die shoe, a die plate of machinery steel is used. To secure the die plate to the die shoe M12 cap screws and dowels are used. A minimum of twice the size of the cap screw for the distance from the edge of the die to the edge of the die plate is needed, which will equal 25 mm. Twice this distance = 50 mm and 50 mm added to the size of the die will result in a die plate of 25 x 180 x 346 mi:n. (Fig 8) shows the die and die plate fitted together, and with the holes, which show the sharpening portion and the relief portion.

Scrap-strip development for part

B = 1.25t = 1.25 x 3.2 = 4 mm

W = H + 2B = 60 + 8 = 68mm

C = L + B = 60 + 4 = 64mm

Step 5: Calculation of Punches

Good practice requires 10 per cent of the metal thickness to be removed from the basic dimension of the blanking punch. This same value is used on the die opening, since holes are to be pierced in the blank. The clearance rule will be applied to the die opening in Stages 1, 2, and 3, and to the punch in Stage 4 (Fig 7).

Fig 7

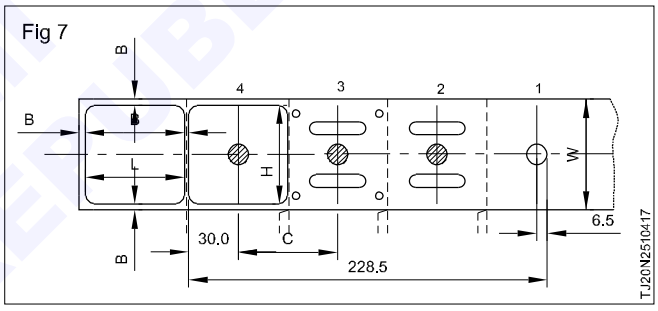

For Stage 4: Blank to be 60 mm square,

Stock thickness = 3.2 mm; 10% = 0.32 mm.

Punch = 60 - 0.32 = 59.68 mm.

Therefore the die opening will equal 60.01 to 60 mm and the punch will equal 59.68 to 59.67 mm.

For Stage 2: Slot to be 8 mm wide by 34 mm long.

Die = 8 + 0.32 + 8.32 mm long = 34.32 to 34.33 mm.

Punch will equal 3.99 to 8.00 mm. wide, and 33.99 to 34.00 mm. long.

The punch and the die opening will have straight sides for at least 3-11 also shows a 3 mm shear for the die at Stage 4 and a 3 mm shear for the punches of Stage 2, and also the stepped arrangement of the punches for all stages.

The fitting of the die and die plate. Note the shear on stage 4, also the straight edge and the relief at the opening.

Step 6: Springs

A solid stripper plate can be used for this job.

NOT TO BE REPUBLISHED

Step 7: Piloting

(Fig 8) illustrate the arrangement for piloting. In this case it is direct piloting. However, if the part did not have a center hole, and the slots and other holes were too small, indirect piloting would have to be provided.

Fig 8

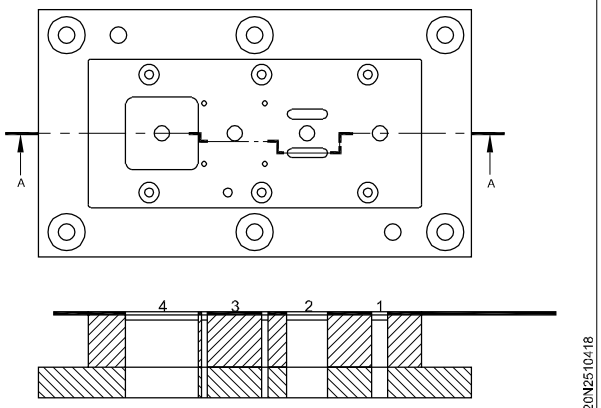

Step 8: Automatic Stops

Finger stops will act as stops when a new scrap strip is being inserted but, after that, an automatic spring drop stop must be used to halt the scrap strip. (Fig 9) illustrate details of the completed drawing of the die.

Illustrates calculation of clearance, Shear on punches, Die and Stepped arrangement of punches to reduce cutting pressure.

Fig 9

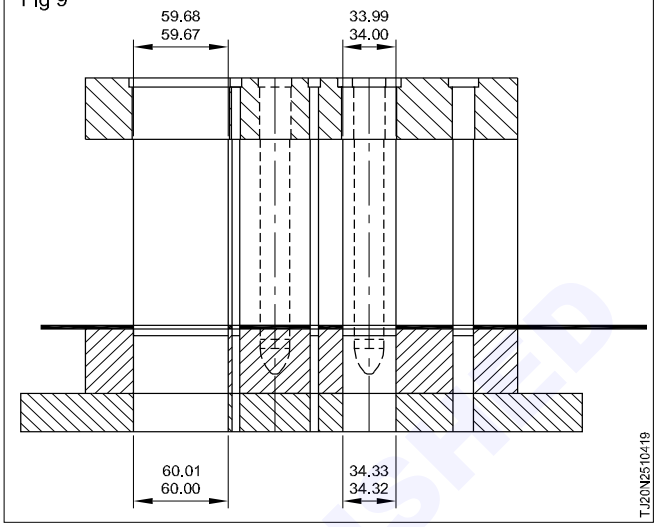

Guide Plate Tool

Objectives: At the end of this lesson you shall be able to

- **explain the function of the following elements in press tool**
  - **punch** - **die** - **top plate**
  - **bottom plate** - **punch holder** - **thrust plate**
  - **stripper** - **shank** - **stopper**
  - **screws and dowels**
- **state the conditions for selecting guide plate tools**
- **design guide plate tools for punching simple components.**

Guide plate tool: The guide plate tool consists of (Fig 1)

1 Punch
2 Die
3 Punch holder
4 Thrust plate (back plate)
5 Shank
6 Top plate
7 Stripper cum guide plate
8 Bottom plate
9 Stopper
10 Screws and dowels.

Application: The guide plate tools are preferred when

- the shape of the component is simple.
- the accuracy of the component is less.
- only a fewer number of components are required.

Punch One cutting element of the blanking tool is the punch. It is made out of good quality alloy steel. They are hardened and tempered. (Fig 2)

Die: The other cutting member in a tool is called the die. (Fig 3) It is also made of alloy steel. It is hardened and tempered.

Punch holder: The punch is fixed in the punch holder. The fit between the punch and punch holder is H7/p6. (Fig 4)

Thrust plate (back plate): While punching the punch exerts an upward thrust. The punch is backed up by a hardened plate to prevent it from digging into the soft top plate. (Fig 5)

Shank: The tool is located and clamped to the press ram by the shank. The diameter of the shank for a particular tool depends only on the diameter of the corresponding hole size in the press ram. Shanks are standardised to suit different presses. (Fig 6)

Top plate: The punch assembly consisting of the punch, punch holder and thrust plate is mounted on the top plate with screws and dowels.

The shank is also screwed into the top plate. The top plate is manufactured out of mild steel or cast iorn. This plate should be of sufficient thickness to prevent bending. (Fig 7)

© NIMI NOT TO BE REPUBLISHED

Fig 1

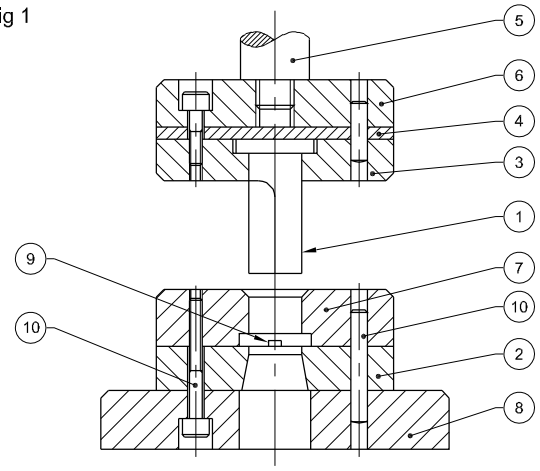

GUIDE PLATE TOOL

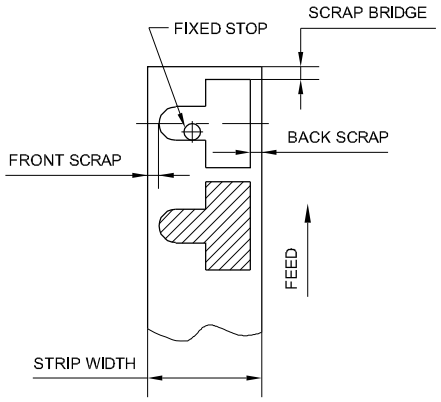

T.J20N2510421

Fig 2

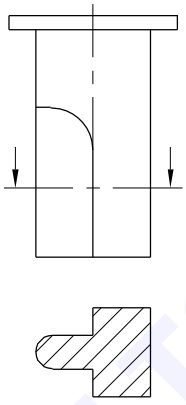

PUNCH

T.J20N2510422

Fig 3

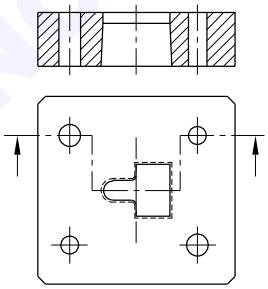

DIE

T.J20N2510423

Fig 4

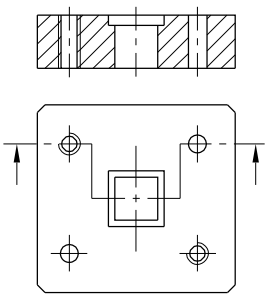

PUNCH HOLDER

T.J20N2510424

Fig 5

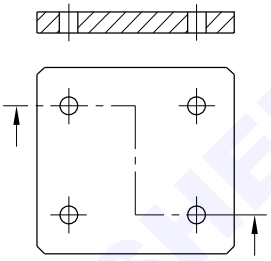

THRUST PLATE

T.J20N2510425

Fig 6

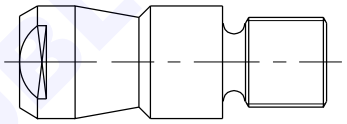

SHANK

T.J20N2510426

Fig 7

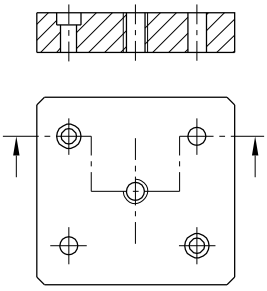

TOP PLATE

T.J20N2510427

Stripper cum guide plate: While performing the cutting operation the punch penetrates the stock material and enters into the die. The blank is pushed into the die on the completion of the cutting operation. After this the punch is withdrawn from the die. But the cut out stock around the punch clings to it and goes up along with it. The strip cannot be fed forward unless it is freed from the punch.

To facilitate the removal of the strip from the punch, another plate is mounted on the top of the die with the help of screws and dowels. This plate does not allow the strip to be dragged along with the punch.

As it strips the stock material from the punch, it is called stripper. (Fig 8) The stripper also guides the strip to be fed in line with the die profile. For this, a channel is milled on the bottom face of the stripper.

© NIMI NOT TO BE REPUBLISHED

Fig 8

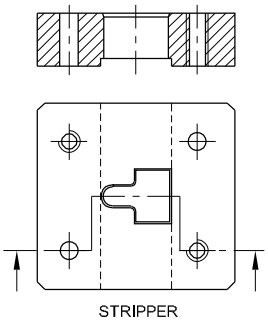

STRIPPER

T.J20N2510428

In a guide plate tool the stripper aligns the punch with the die. A close sliding fit is maintained between the punch and the punch opening in the stripper (H7/g6). The stripper is located and clamped perfectly in line with the die. Whenever a stripper guides a punch into position it is called a guide plate. They are usually made of low carbon steel, it higher production is anticipated they are made of medium carbon steel and hardened.

Bottom plate : The bottom plate gives cushioning effect to the die. It provides space for the tool to be clamped to the press bed. There will be an opening in the bottom plate to allow the blank to fall clear off the tool. The die is clamped to the bottom plate. (Fig 9) The opening will be designed to meet the following requirements.

Fig 9

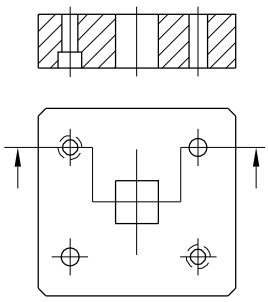

BOTTOM PLATE

T.J20N2510429

The opening should not weaken the support of the die.

The blank should fall clear off the die without any obstruction.

The contour of the opening should be made as simple as possible.

Since the sharp edges of the blank cut into the side walls, extra relief should be provided in such cases. (By drilling relief holes)

The bottom plate is made of mild steel or cast iron. It should be thick enough to prevent deformation under pressure.

Stopper : Stopper is a plain cylindrical pin (Fig 10). The pin is mounted in the die block. The function of the stopper is to arrest the movement of the strip when it is fed forward (through one pitch).

Fig 10

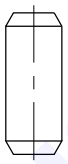

STOPPER

T.J20N251042A

Screws and dowels : Screws are used to hold the die parts together and the dowels are used to align the tool parts. (Fig 11)

Fig 11

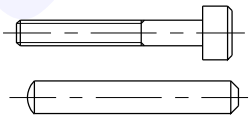

SCREWS AND DOWELS

T.J20N251042B

Cutting Clearance

Objectives: At the end of this lesson you shall be able to

- **state what is cutting clearance**
- **explain the effect of the following on the component/hole**
  - **optimum cutting clearance**
  - **excessive cutting clearance**
  - **in sufficient cutting clearance**
  - **misalignment between punch and die**
  - **explain the relationship of burr side to cutting element (punch or die)**
  - **piece part size to punch and die size**
- **state the formula for calculating cutting clearance**
- **calculate cutting clearance**
- **determine punch and die dimension.**

During punching operation the punch should enter into the die to shear the material. Therefore, the punch is always smaller than the die opening.

The gap between a side of the punch and the corresponding side of the die opening (when the punch is entered into the die) is called cutting clearance. (Fig 1)

The life of the tool and the quality of the component are affected if inadequate or excessive cutting clearance is provided.

Cutting clearance is always expressed as the amount of clearance per side. A visual examination of the punched component will indicate whether the punch and die have

© NIMI NOT TO BE REPUBLISHED

Fig 1

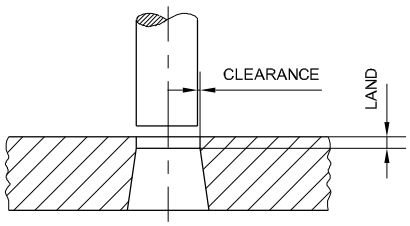

- optimum cutting clearance
- excessive cutting clearance
- insufficient cutting clearance
- misalignment

Optimum cutting clearance: When cutting clearance is optimum a small edge radius is formed.

The edge radius is the result of the plastic deformation (first stage of shearing). A highly burnished cut band is produced (approximately one third the thickness of the stock material). The balance of the cut is the break resulting from fracture (third stage). (Fig 2)

Fig 2

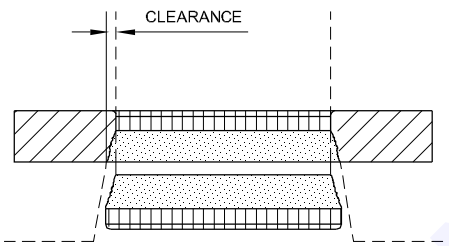

Excessive cutting clearance: The gap between the punch and the die is comparatively more in this case. The stock material reacts to the initial pressure in a manner approaching forming rather than cutting. Therefore, the edge radius becomes larger. It does not blend smoothly with the cut band. The cut band becomes smaller. The break shows greater irregularities. Heavy burrs are noticeable all along the cut contour. The burr results from the dragging of the material. (Fig 3)

Fig 3

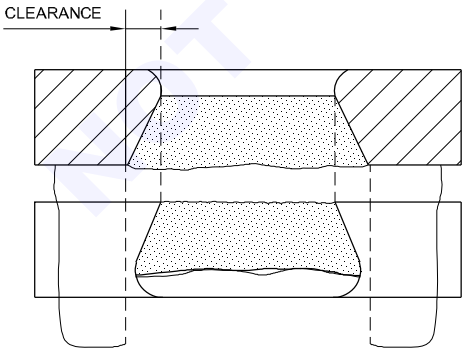

Insufficient cutting clearance: When cutting clearance is slightly less, the width of the cut band will be more. If cutting clearance is too little, two or more cut bands will be formed. Because of the steeper angle between the punch and the die cut edges the resistance of the stock material to fracture is increased. (Fig 4) The resulting pressure will cause the initial fracture to originate at clearance rather than at the cut edges. Burrs may be caused by compressive forces.

Fig 4

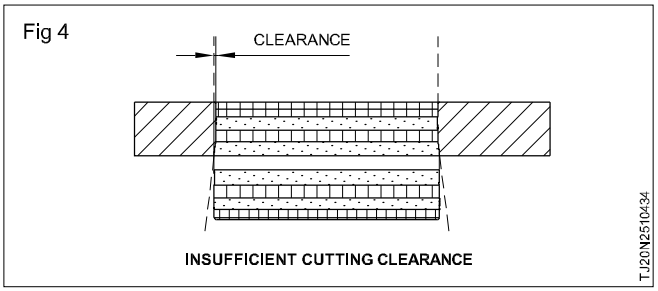

Misalignment between punch and die: The cutting characteristics also indicate whether the punch and die openings are in accurate alignment. Because of misalignment clearance on one side increases and that on the other side decreases. The component will show the corresponding characteristics on the respective sides. (Fig 5)

Fig 5

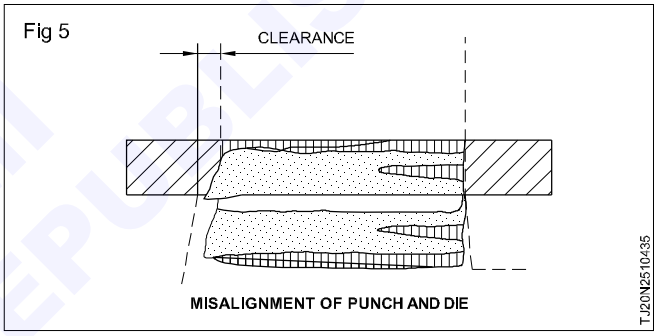

Burr side: The burr side is adjacent to the break. Burr should be practically non - existent.

- If the cutting clearance between the punch and die is optimum.
- If the cutting edges are sharp.

The burr side of a blank or slug is always towards the punch (die starts shearing). The burr side of a punched opening is always towards the die opening (punch starts shearing).

The characteristics of the blank or slug and the punched opening are inversely identical. (Fig 6)

Fig 6

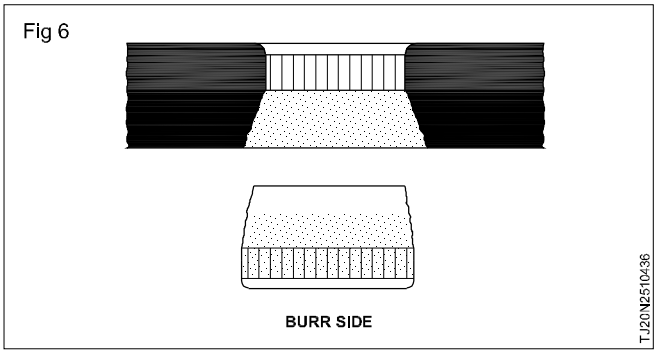

© NIMI NOT TO BE REPUBLISHED

Relationship of piece part size to punch and the die size: When pierced or blanked piece parts are measured, the measurement is made at the cut band.

Blanking: The actual cutting of the blank or slug is done by the cutting edge of the die opening. Therefore, the die opening determines the size of the blank or slug. (Fig 7)

Fig 7

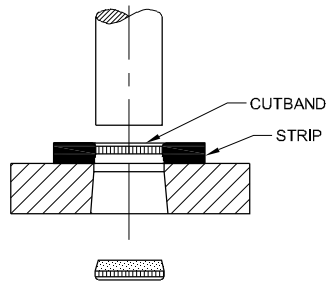

BLANKING

TJ20N2510437

Blanking punch size = Blank size - total clearance,

Blanking die size = blank size.

Piercing: The actual cutting of the opening in the stock material is done by a punch. therefore, the size of the punch determines the size of the pierced hole. (Fig 8)

Fig 8

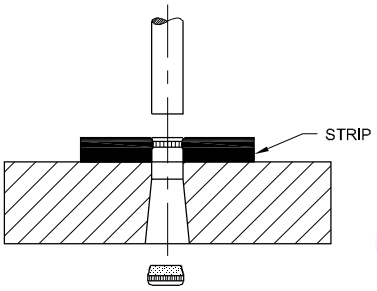

TJ20N2510438

Piercing punch size = Pierced hole size

Piercing die size = pierced hole size + total clearance

The ideal clearance can be calculated by the following formula.

Clearance $= C \times s \times \sqrt{\frac{\tau max}{10}}$

Where 'c' is constant = 0.005 for very accurate components

= 0.01 for normal components

s = sheet thickness in mm

τ max = shear strength of the stock material in N/mm^2.

Worked out examples

Example 1 (Fig 9 & 10)

Cutting clearance $= C \times s \times \sqrt{\frac{\tau max}{10}}$

Fig 9

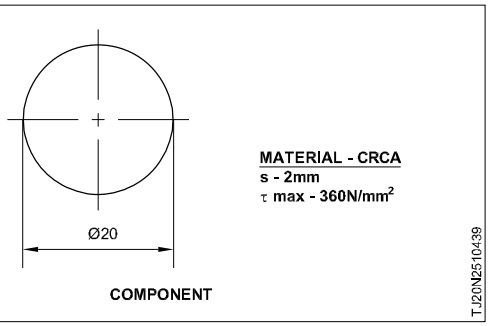

COMPONENT

TJ20N2510439

Fig 10

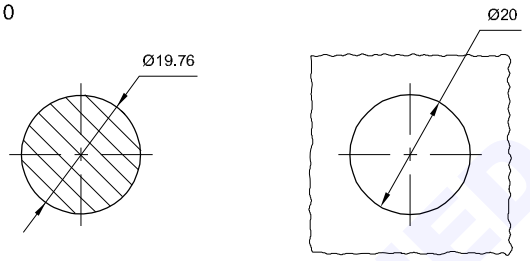

BLANKING PUNCH DIMENSIONS

BLANKING DIE DIMENSIONS

TJ20N251043A

$= 0.01 \times 2 \times$ "36

$= 0.01 \times 2 \times 6$

$= 0.12$ mm/side

Therefore cutting clearance = 0.12 mm/side.

Example 2 (Fig 11 to 15)

Fig 11

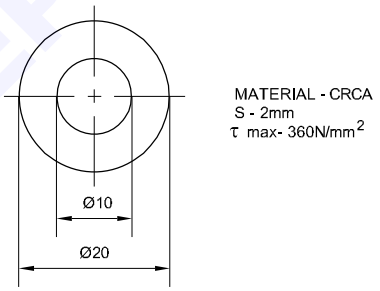

COMPONENT

TJ20N251043B

Fig 12

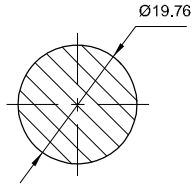

BLANKING PUNCH DIMENSIONS

TJ20N251043C

Fig 13

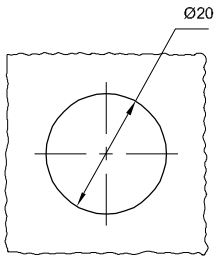

BLANKING DIE DIMENSIONS

TJ20N251043D

© NIMI NOT TO BE REPUBLISHED

Fig 14

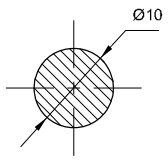

PIERCING PUNCH DIMENSIONS

TJ20N2510 43E

Fig 15

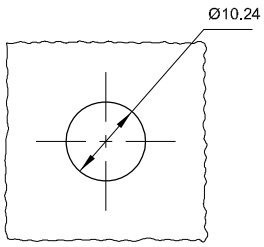

PIERCING DIE DIMESIONS

TJ20N2510 43F

Cutting clearance $= C \times s \times \sqrt{\frac{\tau max}{10}}$

$= 0.01 \times 2 \times \sqrt{\frac{360}{10}}$

$= 0.01 \times 2 \times \sqrt{36}$

Cutting clearance = 0.12 mm/side

Example 3

Determine the punch and die dimensions for the following components. (Fig 16)

Fig 16

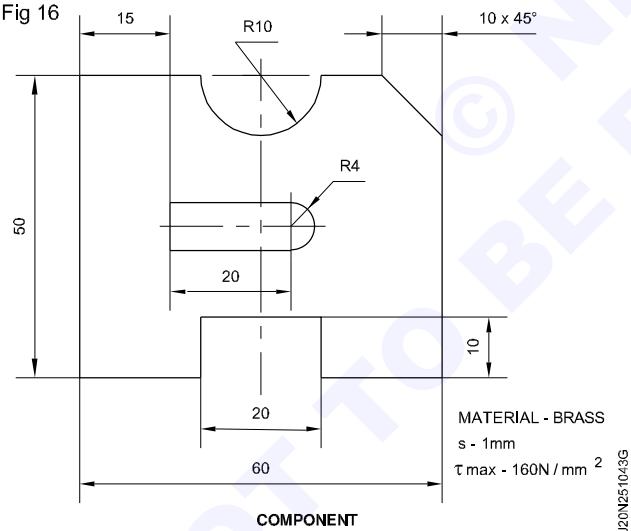

COMPONENT

TJ20N2510 43G

Cutting clearance $= C \times s \times \sqrt{\frac{\tau max}{10}}$

$= 0.01 \times 1 \times \sqrt{\frac{160}{10}}$

Cutting clearance = 0.04 mm/side

Blanking punch dimensions (Fig 17)

Fig 17

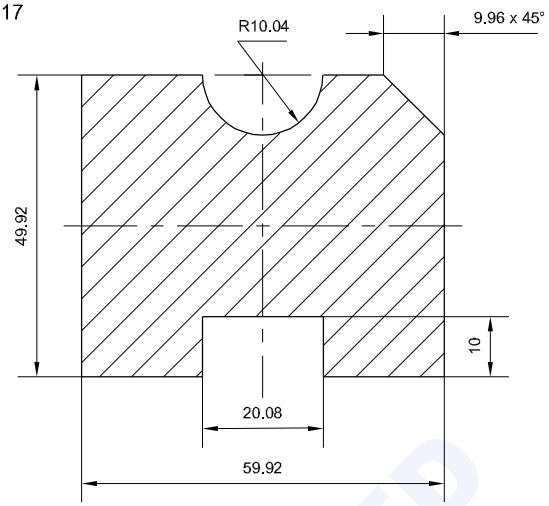

TJ20N2510 43H

Component dimensions	Clr +/-	Punch dimensions
50	-0.08	49.92
20	+0.08	20.08
60	-0.08	59.92
10	-	10
10 × 45	-0.04	9.96 × 45°
R10+0.04		R10.04

Piercing punch size is the size of the pierced opening. (Fig 18)

Fig 18

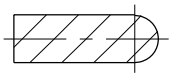

TJ20N2510 43I

Blanking die dimensions are the same as the component dimensions. (Fig 19)

Fig 19

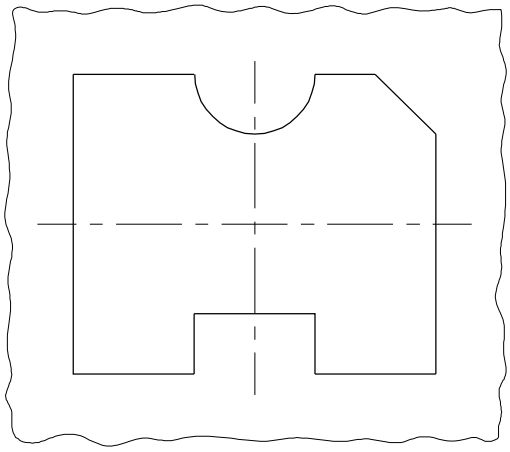

TJ20N2510 43J

NOT TO BE REPUBLISHED © NIMI

Piercing die dimensions (Fig 20)

Fig 20

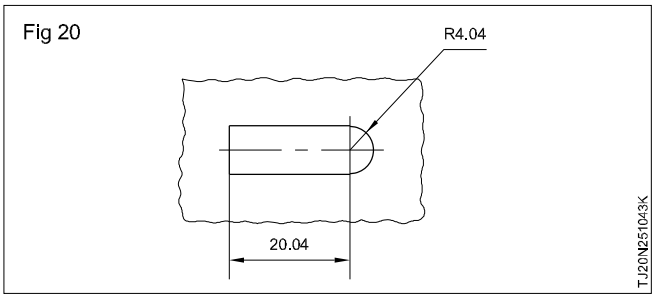

Component dimensions	Clr +/-	Die dimensions
20	+0.04	20.04
R4	+0.04	R4.04

Example 4

Determine the punch and die dimensions for the following component. (Fig 21)

Fig 21

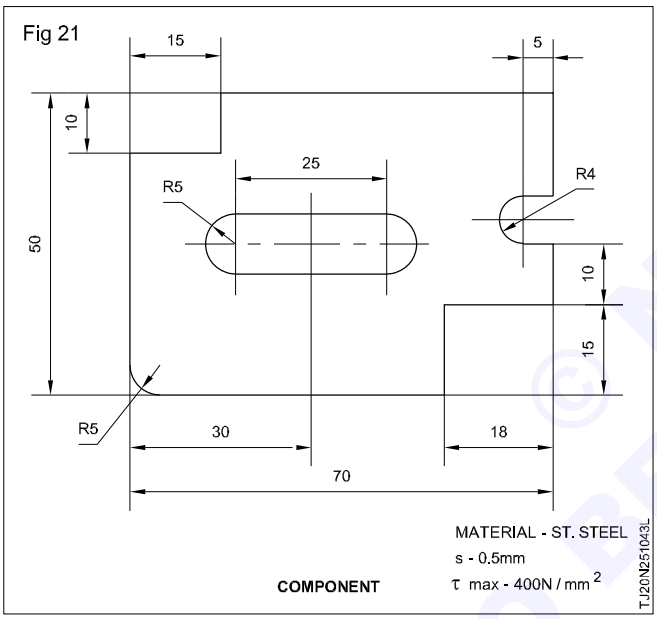

Clearance

$$= C \times s \times \sqrt{\frac{\tau max}{10}}$$

$$= 0.01 \times 0.5 \times \sqrt{\frac{400}{10}}$$

= 0.03mm/side

Component dimensions	Clr +/-	Punch dimensions (Fig 22)
50	-0.06	49.94
R5	-0.03	R4.97
70	-0.03	69.97
15	-	15
10	-	10

Component dimensions	Clr +/-	Punch dimensions (Fig 22)
15	-	15
10	-0.06	9.94
R4	+0.03	R4.03
5	-0.03	4.97
18	-	18

Fig 22

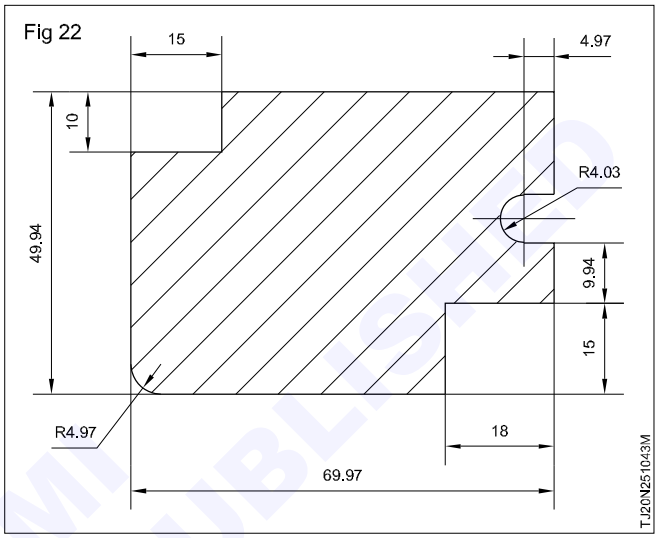

Piercing punch size is the size of the pierced opening. (Fig 23)

Fig 23

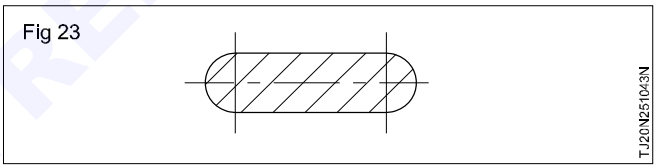

Blanking die dimensions are the same as the component dimension. (Fig 24)

Fig 24

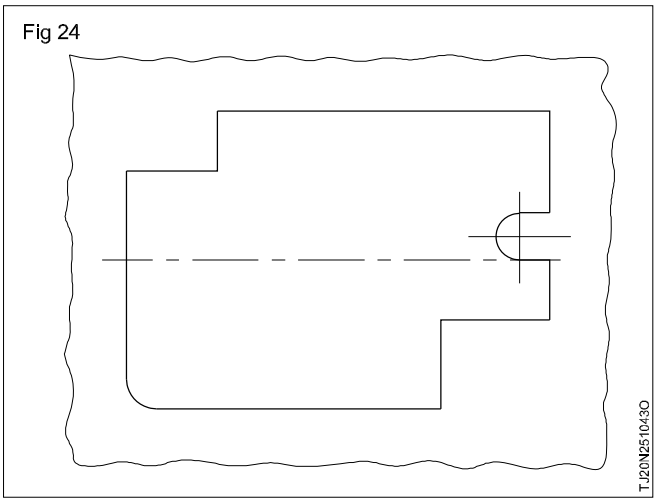

Piercing die dimensions. (Fig 25)

© NIMI NOT TO BE REPUBLISHED

Fig 25

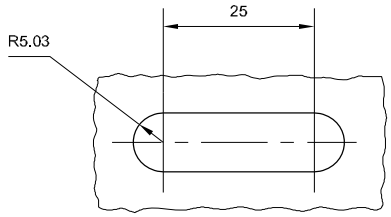

Component dimensions	Clr +/-	Die dimensions
R5	+0.03	R5.03
25	-	25

Example 5

Determine the punch and die dimensions for the following component. (Fig 26)

Fig 26

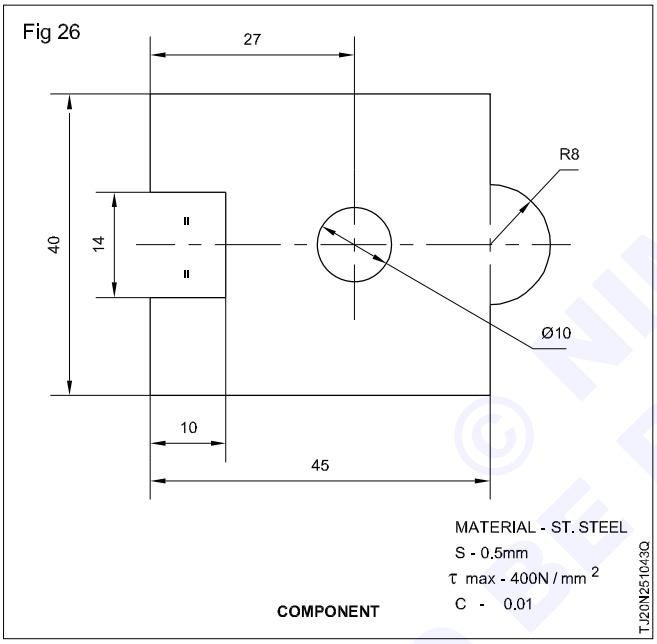

Clearance

$$= 0.01 \times 0.5 \times \sqrt{\frac{400}{10}}$$

$$= C \times s \times \sqrt{\frac{\tau max}{10}}$$

= 0.03mm/side

Component dimensions	Clr +/-	Punch dimensions
45	-0.06	44.94
40	-0.06	39.94
14	+0.06	14.06
10	-	10
R8	-0.03	R7.97

Blanking punch dimensions. (Fig 27)

Fig 27

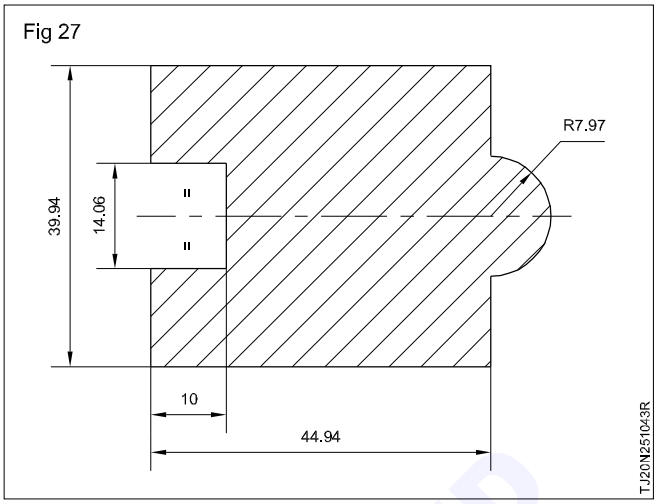

Piercing punch size is the size of the pierced opening. (Fig 28)

Fig 28

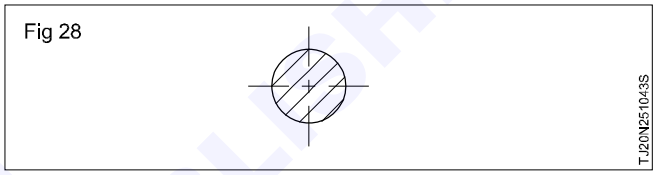

Blanking die dimensions are the same as the component dimensions. (Fig 29)

Fig 29

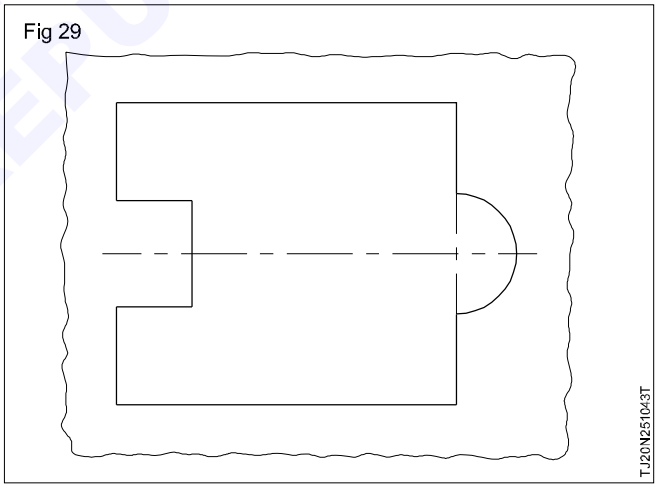

Piercing die dimensions. (Fig 30)

Fig 30

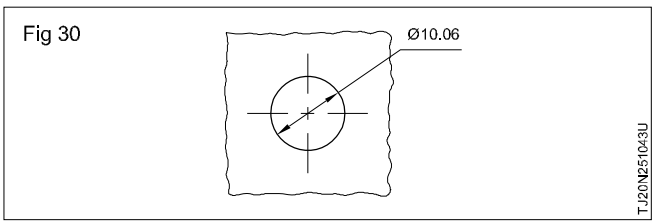

Piercing die size = component size + clearance

= 10 + 0.06

= 10.06

© NIMI NOT TO BE REPUBLISHED

Land and Angular Clearance

Objectives: At the end of this lesson you shall be able to
- **state what is land**
- **state dimension for land for different stock thickness**
- **state angular clearance**
- **explain the importance of angular clearance**
- **state two types of angular clearance**
- **state the type of angular clearance for abrasive materials.**

Land: The inner walls of the die opening are not usually made straight through. If they are straight (Fig 2) the blanks or slug tend to get jammed inside the die opening. This may lead to breakage of the punch or die.

To avoid this the die walls are kept straight only to a certain dimension from the cutting edge. The straight wall is called a land. (Fig 1)

Fig 1

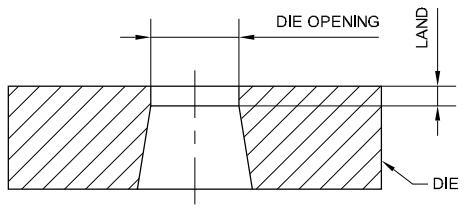

Fig 2

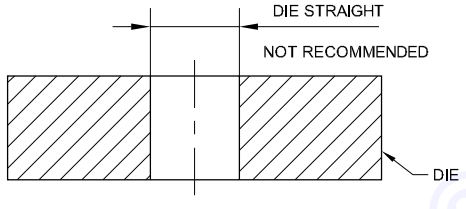

Land = 3 mm for punching sheet thickness up to 3 mm and for thicker material equal to the sheet thickness.

Angular clearance: Angular clearance is necassary to prevent backpressure caused by blank or slug buildup espically when the punches or die block are fragile. Recommended angular espically clearancce varies from ¼ to 2° per side, depending upon the material and the shape of the work piece. Soft materials and heavygage material require greater angular clearance. Larger angular clearance may be necessary for small and fragile punches. (Fig 3)

Fig 3

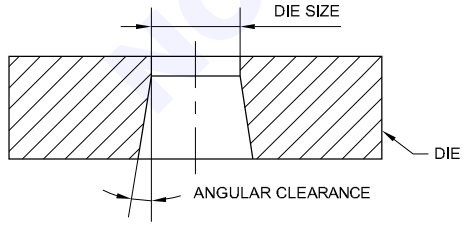

Soft materials require greater angular clearance than hard materials. The normal value of angular clearance is 1.5 degrees per side.

Dies for materials like silicon steel, stainless steel are provided with angular clearance from the cutting edge. These materials are abrasive in nature and tend to belt mouth the die opening rapidly. No land is therefore provided. (Fig 4)

Fig 4

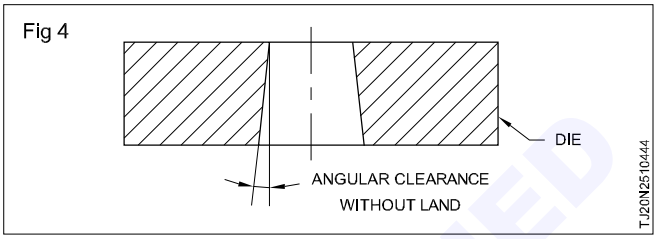

Die with ejector (Without angular clearance):

Tools employing ejectors to clear the blanks will have straight walls without any angular clearance. (Fig 5)

Fig 5

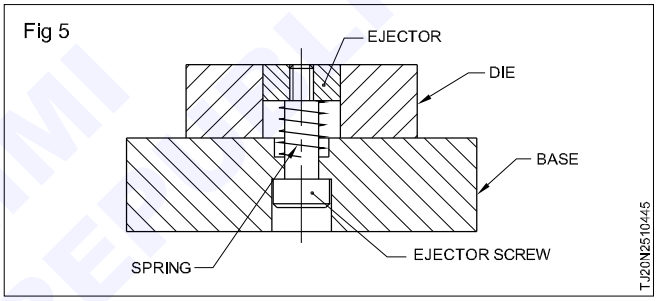

Alignment technique between punch and die while assembly (Fig 6)

Fig 6

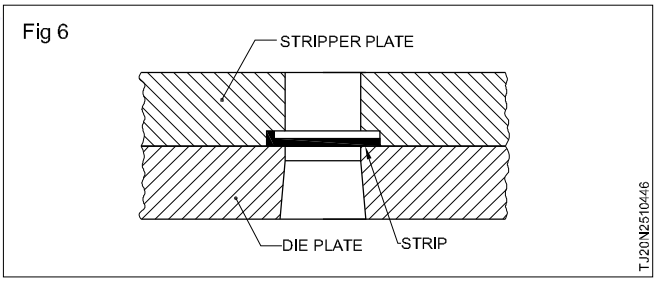

Set the tool on the press. Lift the press ram.

Feed 0.5 x 5.2mm CRCA strip through the stripper plate channel and stop aganist the stopper.

Lower the press ram to strip.

After the cutting action, lift the ram (punch should not come out of stripper plate).

Lift and feed the strip forward through one pitch and stop aganist the stopper.

Lower the press ram to blank the component.

Repeat the same procedure to get five blanked components.

While aligning the punch and die, mountain 0.03mm clearance per side and confirm this with the feeler gauge.

© NIMI NOT TO BE REPUBLISHED

Fasten the socket head screws.

Take the first trail.

Inspect the component and check for the uniform cut hand and burr.

If the alignment is not achieved it should be readjusted using feeler gauges.

Drill, ream and dowel the assembly.

Use this blank for the bending tool.

Cutting Force

Objectives: At the end of this lesson you shall be able to
- **state cutting force**
- **state the formula for calculating cutting force**
- **calculate the cutting force for punching operations**
- **state the methods employed for reducing press force (cutting force).**

Cutting force

Cutting force is the force required to punch a blank or slug. This determines the capacity of the press to be used for the particular tool.

Calculation of cutting force

Cutting force = $l \times s \times \tau$ max

Where

l = length of periphery to be cut in mm

s = sheet thickness in mm

τ max = shear strength of stock material in N/mm^2.

Methods of reducing cutting force

If a lower capacity press is available for punching the cutting force can be reduced by the following methods.

By providing shear angle: By grinding shear angle on punch or die. This reduces the area of contact during shear at any one time (i.e. the total periphery of the material will not be sheared at an instant but shearing will take place progressively). The shear angle also reduces shock to the press and smoothens out the cutting operation. The shear angle should provide a change in the punch length from 1 to 1.5 times the sheet thickness. (Fig1 & 2)

Fig 1

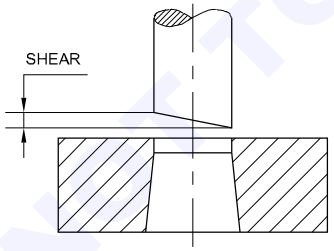

Fig 2

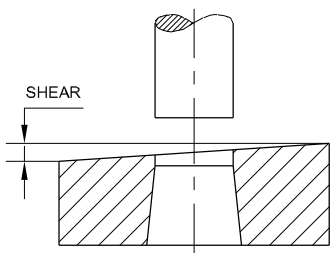

A single shear angle creates lateral force. Double shear angle does not create any lateral force.

Double shear angled punches should be concave to prevent stretching the material before it is cut. (Figs 3 & 4)

Fig 3

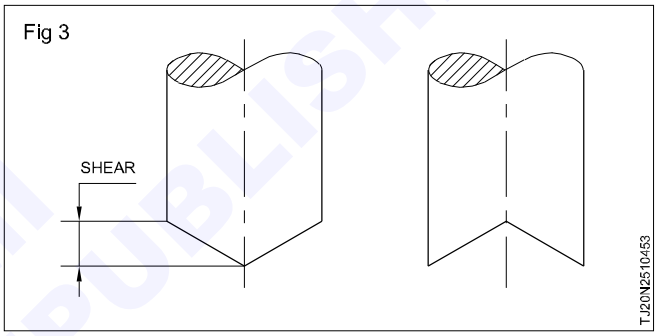

Fig 4

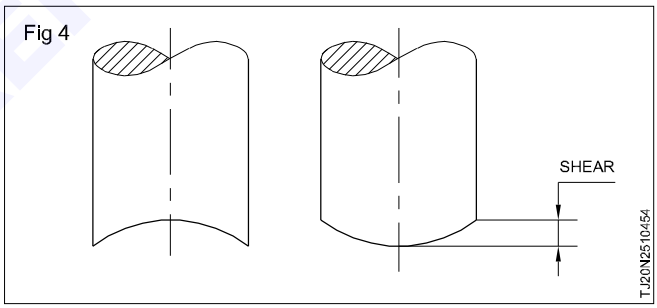

To prevent distortion on the stock material

- For blanking operation the shear angle will be on the die member. (Fig 5)

Fig 5

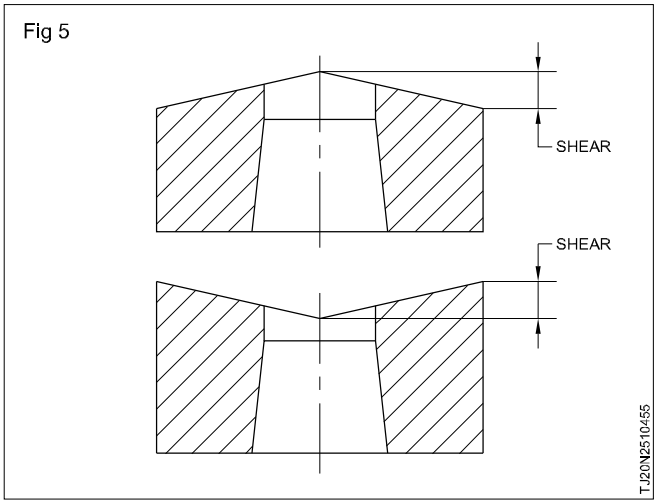

NOT TO BE REPUBLISHED

- For piercing operation the shear angle will be on the punch member.

By stepping punches: Punches or groups of punches are made progressively shorter by about one sheet thickness.

The punches cut progressively. Therefore the total cutting force is not required at the same instant. (Fig 6)

Fig 6

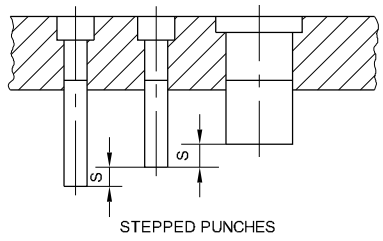

Calculation

Cutting force (Fig 7)

$= l \times s \times \tau \text{ max}$

$= (\pi \times D) \times s \times \tau \text{ max}$

$= 3.14 \times 20 \times 2 \times 360$

$= 45216N$

Therefore Cutting force = 45.21 k.N

Fig 7

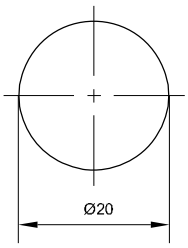

Cutting force (Fig 8)

$= l \times s \times \tau \text{ max}$

$= (\pi D \times \pi d) \times 2 \times 360$

$= [(3.14 \times 20) + (+3.14 \times 10)] \times 720$

$= [62.8 + 31.4] 720$

$= 94.2 \times 720$

$= 67824N$

Therefore cutting force = 67.82 kN.

Fig 8

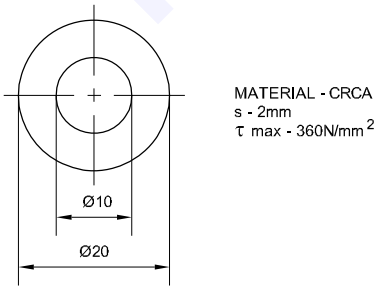

Worked out examples

Example 1 (Fig 9)

Calculate the press force required to produce the following component.

Press force $= l \times s \times \tau \text{ max}$

$l = 343.27$

$s = 2.2$ mm

$\tau \text{ max} = 120 \text{ N/mm}^2$

Press force $= 343.27 \times 2.2 \times 120$

$= 90623.28$ N

$= 90.62$ kN

Fig 9

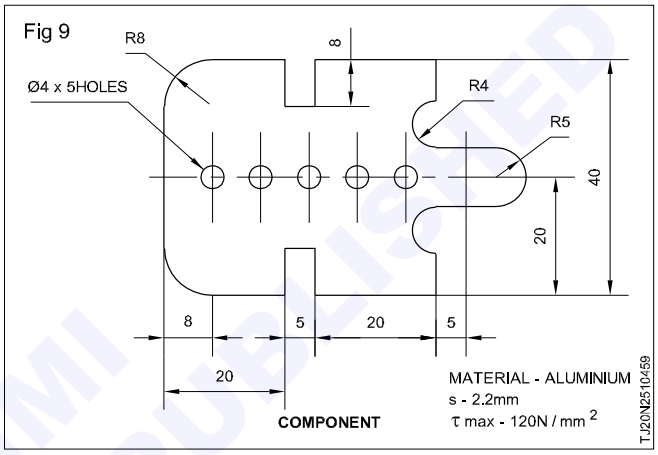

Example 2 (Fig 10)

Cutting force $= l \times s \times \tau \text{ max}$

$l = 311$ mm

$s = 1$ mm

$\tau \text{ max} = 400 \text{ N/mm}^2$

Cutting force $= 311 \times 1 \times 400$

$= 12440$ N

$= 124.4$ kN

Fig 10

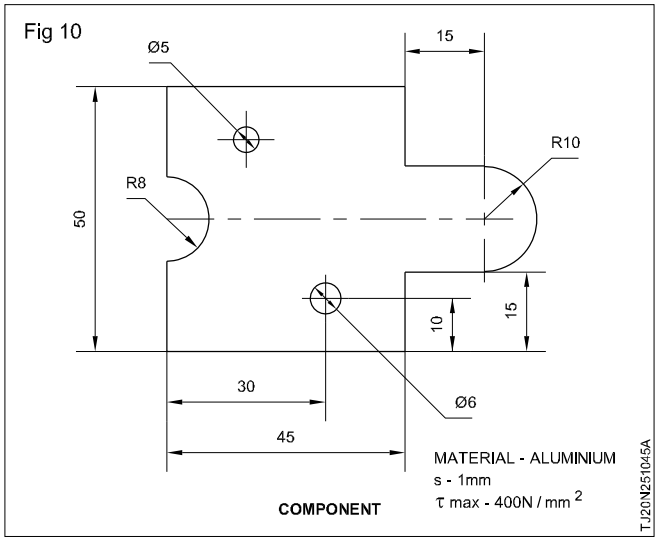

© NIMI NOT TO BE REPUBLISHED

Calculate the press force required to produce the following components. (Figs 11,12 and 13)

Fig 11

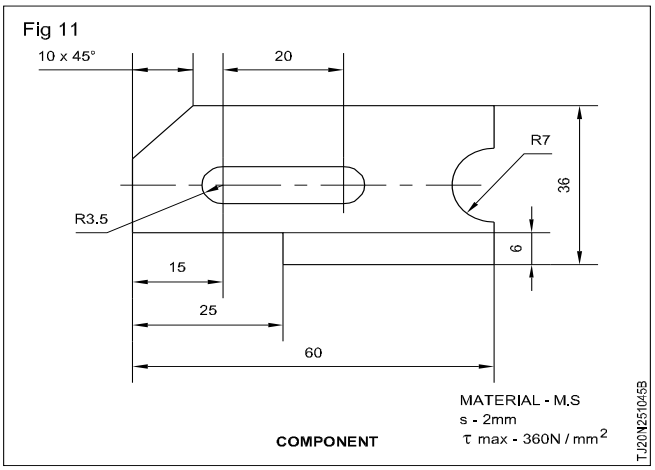

Fig 12

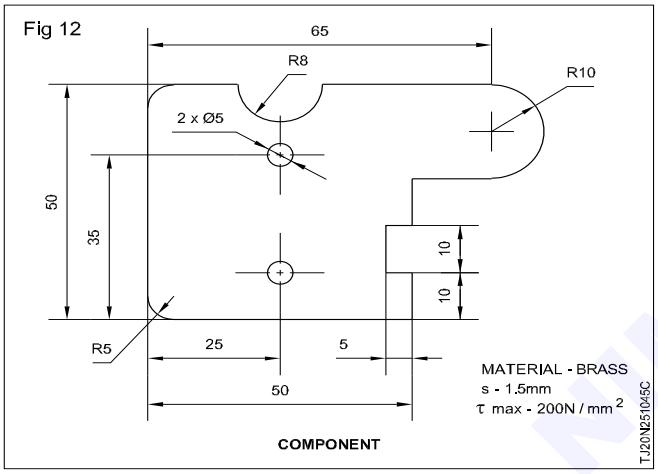

Fig 13

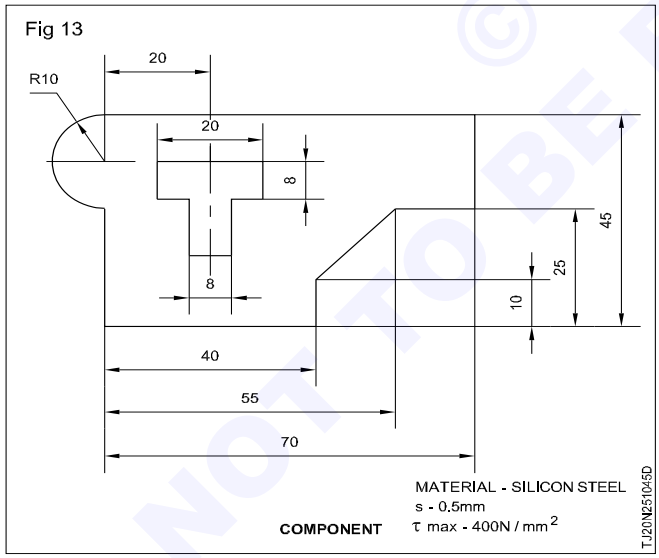

Selection of Press

The press should be capable of delivering about 33% more force than required. The cutting edges of punch and die get blunt due to usage which increases the vertical force considerably. The tonnage of hydraulic presses is the piston area multiplied by the oil pressure in the cylinder. Changing the oil pressure varies the tonnage. The tonnage of mechanical presses is determined by the size of the bearings for the crankshaft or eccentric and is approximately equal to the shear strength of the crankshaft metal multiplied by the area of the crankshaft bearings. The tonnage of a mechanical press is always given when the slide is near the bottom of its stroke because it is greatest at this point.

Table: The length and transverse width of press table should be more than width and length of press tool to ensure proper resting of the tool on the table. Overhanging parts of tools bigger than press table should be supported adequately with jacks or brackets screwed to press tool.

Shank hole: Tool shank should be running fit in the shank hole. The length of the shank should be 1 to 2 mm less than shank hole depth to ensure full contact of the ram face width the top bolster of the tool. The shank clamping screw should be almost at the centre of the tapered part of the shank.

Throat: The the maximum distance from the centre to the rear end of the tool must be less than the throat of the press. Otherwise it will not be possible to assemble tool shank in the shank hole in the press. Generally the throat is half the table depth.

Opening at back: In inclinable presses blanks/scrap bigger than table hole size can be disposed of through the opening in the rear frame of the press. The press is usually inclined to a 30° descent towards the rear to effect gravitational slide down of blank/scrap through the opening in rear frame. Naturally the blanks should be smaller than the opening at the back.

Stroke: Fixed stroke as well adjustable stroke press are used widely. The stroke of the press should be long enough to accomplish the work executed on the press. Bending tools require longer press stroke than cutting tools while deep drawing calls for longer strokes. The clearance required for loading and unloading work pieces must be taken in to account while determining the minimum stroke necessary for the operation.

Shut height: The shut height of a press is the distance from the top of the bed to the bottom of the slide with the stroke down and the adjustment up. The thickness of the bolster plate must always be taken into consideration when determining the maximum die height. The shut height of the die must be equal to or less than the shut height of the press. The shut height of a press is always given with the adjustment up. Lowering the adjustment of the slide may decrease the opening of the press from the shut height down, but it does not increase the shut height. Thus the shut height of a die must not be greater than the shut height of the press. It may be less, because lowering the adjustment can reduce the die opening in the press.

© NIMI NOT TO BE REPUBLISHED

Stock Material - Types and Conditions

Objectives : At the end of this lesson you shall be able to
- **name the different materials used in press work**
- **differentiate the materials used in press work**
- **name the different grades of cold rolled sheets**
- **state the properties of different grades of cold rolled sheets.**

Stock material

The material out of which stampings (components) are made is known as stock material. Stamping can be made from metallic or non - metallic materials. Metallic materials include ferrous and non - ferrous metals.

Ferrous metals

- Hot rolled steel
- Cold rolled steel
- Stainless steel
- Spring steel

Non - ferrous metals

- Copper
- Brass
- Bronze
- Aluminium
- Tin
- Zinc

Non - metallic materials

- Plastic
- Rubber
- Wood
- Cloth
- Paper

Stock strip: Stock strips (Fig 1) are fed continuously into the tool. They are advanced through the required advance distance at each press stroke for a series of repetitive operations.

Fig 1

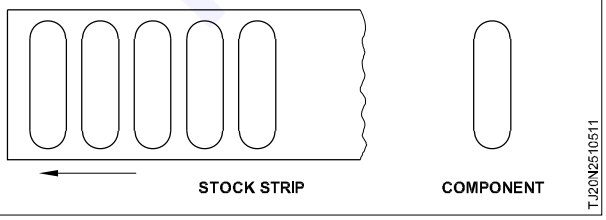

Unit stock: Stock materials which are fed individually into the tool for processing are called unit stock. (Fig 2)

Fig 2

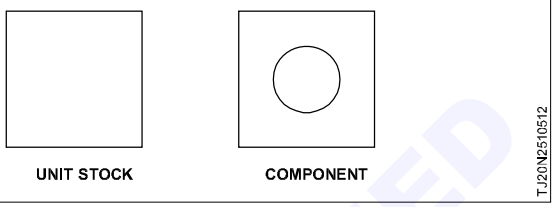

Piece part: A piece part is a product of a tool. It may be a complete product by itself or one component of a product. (Fig 3)

Fig 3

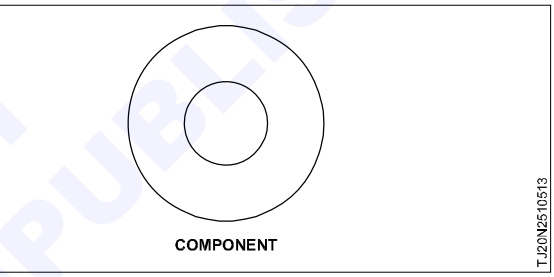

Hot rolled steel sheets: Used for punching components where scaling and discoloration are not objectionable. The surfaces are painted after operation (if required).

Pickled and oiled sheets: Immersing hot rolled sheets in acid solutions and then washing them result in smooth clean scale - free surface. Oil protects the surface against rusting. Pickled and oiled sheets are used in the manufacture of parts for household appliances, automobile parts, toys, etc. The sheets can take long lasting painting due to absence of scales.

Cold rolled sheets: They have a smooth deoxidised finish. This provides excellent base for paint or enamel coating. The thickness of the sheet is uniform. They are available in six grades of hardness.

Hard: Hard sheets and strips can not bend in either direction of the grain without cracks or fracture. Such sheets are used for producing flat blanks (Fig 4) that require resistance to bending and wear.

Fig 4

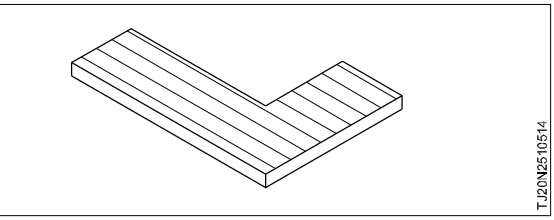

© NIMI NOT TO BE REPUBLISHED

Three quarter hard: Three quarter hard strips can be bent to an angle 60° from flat only across the grain, (Fig 5)

Fig 5

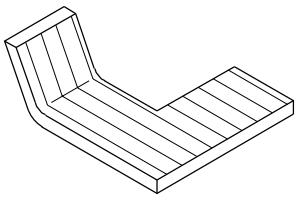

T.J20N2510515

Half hard: Half hard steel strips canbe bent to 90° across the grain. (Fig 6)

Fig 6

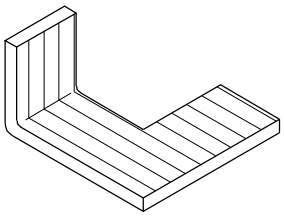

T.J20N2510516

Quarter hard: This can be bent over flat (180°) across the grain and to a sharp right angle along the grain. (Fig 7)

Fig 7

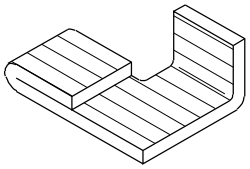

T.J20N2510517

Soft: Soft grades of steels can be bent over flat (180°) both across and along the grain direction. (Fig 8)

Fig 8

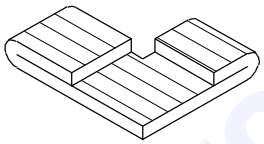

T.J20N2510518

Dead soft: This grade of steel is used for severe forming and drawing operations.

Note Grain direction: The direction of orientation of grains in the sheet for rolled sheets is along the direction of rolling. (Fig 9)

Deep drawing steel sheets: They are cold rolled, low carbon steels. They are thoroughly annealed, deoxidised and oiled. Deep drawing steel sheets are used for difficult drawing, spinning and forming operations.

Fig 9

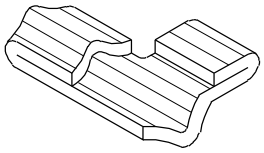

T.J20N2510519

Silicon steel: Silicon steel is used for electrical laminations.

Stainless steel It is used where corrosion resistance is a requirement.

Non - ferrous metals: Copper and its alloys are widely used as stock material. They are good conductors of heat, electricity, and are also highly non - corrosive.

Copper alloys include

- Beryllium copper
- Red brass
- Low brass
- Cartidge brass
- Yellow brass
- Muntz metal, and
- Phosphor bronze.

Other non - ferrous metals used are aluminium alloys magnesium and magnesium alloys.

Rare metals: Rare metals like zirconium, tantalum, vanadium, tungsten and molybdenum and their alloys are used in press working.

Precious metals: Precious alloys like gold, silver, platinum etc. are used for manufacturing laboratory equipment and for electrical industry.

Clad metals: It consists of a core one metal and a covering layer of dissimilar metal.

Preparation of stock: In steel mills the metal is formed into large sheets by rolling. The sheets are cut into strips in a shearing machine. Slitting machines are also used to cut the sheets.

Note: Commercial steels for press working.

CRCA: Cold rolled close annealed (for punching operations)

EDD steel: Extra deep drawing steel (for deep drawing operations).

© NIMI NOT TO BE REPUBLISHED

Strip Layout

Objectives: At the end of this lesson you shall be able to

- **state the importance of proper strip layout**
- **calculate the economy factor of strip layout**
- **state the factors influencing strip layout**
- **differentiate between single row one pass and single row two pass layout**
- **differentiate between narrow run and wide run**
- **explain the different types of strip layout.**

Strip layout

For press operations the sheet metal can be in the form of unit stock or strip.

Unit stock is an individual piece. Only one component can be produced by one unit stock. For every component the stock material (unit stock) should be loaded and unloaded from the press tool. (Fig 1)

Fig 1

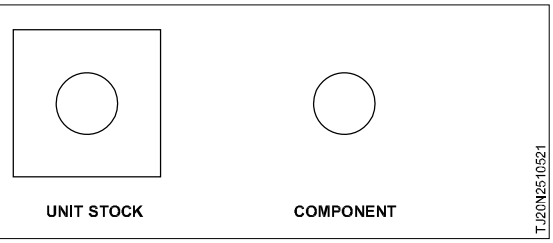

Strip is a lengthier piece of raw material for pressings. A large number of components can be pressed from one strip. The strip will be advanced forward after each pressing. The distance through which the strip is advanced is called pitch. The arrangement (layout) for the punching of the components in the strip is called the strip layout. (Fig 2)

Fig 2

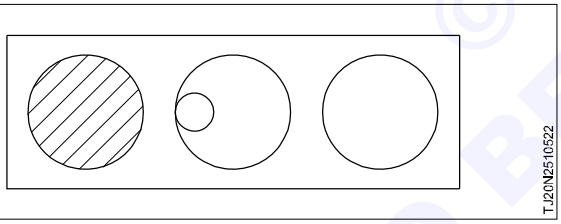

Terms used in a strip layout (Fig 3)

Fig 3

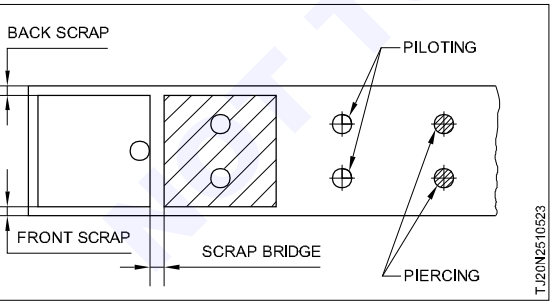

The portion of the material remaining between two adjacent openings after blanking is called the scrap bridge.

Front scrap: This is the scrap bridge on that edge of the strip which is towards the operator.

Back scrap: This is the scrap bridge on that edge of the strip which is away from the operator.

Stock material conservation: While using strips for production of pressed components, the aim should be to produce maximum number of components from a given strip. The layout should aim at maximum economy. This economy of strip layout is given by the formula.

Economy factor (E) in % = area of the blank x number of rows x 100/width of strip x pitch.

The minimum economy should be 60%

Example

Calculate the economy factor to punch a washer in single row feeding. Outside diameter is 30 mm. Inside diameter is 18 mm and thickness 2 mm. (Fig 4).

Fig 4

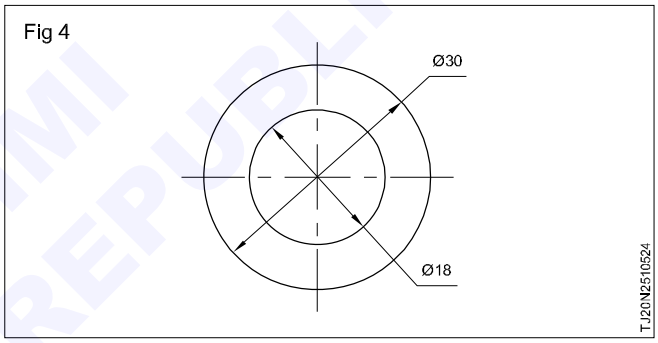

Scrap bridge width is 1.2s

E = areaofblank×100×numberofrows/pitch× strip width

Scrap bridge width = 1.2 × 2 = 2.4 mm (Fig 5)

Fig 5

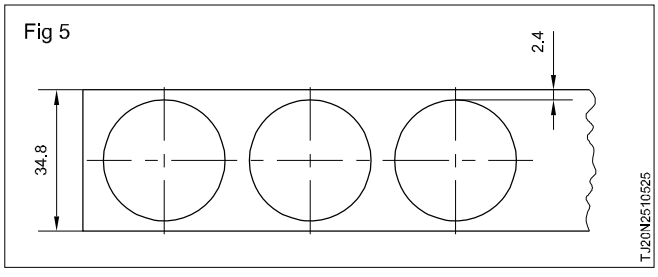

Pitch = 30 + 2.4 = 32.4 mm

Strip width = 30 + 4.8 = 34.8 mm

Area of blank = 706.92 mm2.

Number of rows = one area of blank

E = 706.95 × 100 × 1/32.4 × 34.8

= 62.69%

Calculate the economy factor to punch the same washer in double row feeding. (Fig 6)

© NIMI NOT TO BE REPUBLISHED

Fig 6

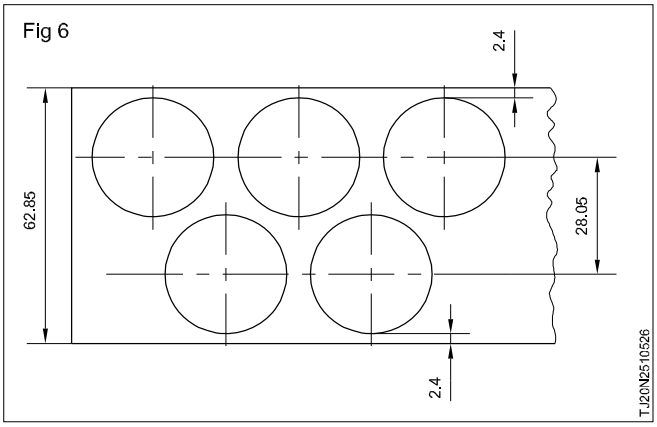

E = area of blank × 100 × number of rows/pitch × strip width.

Pitch = 32.4 mm

Area of blank = 706.95 mm2

Number of rows = 2

Centre distance between two washers is required to determine the strip width.

Centre distance = COS30° × pitch

= 0.866 × 32.4

= 28.05 mm

Strip width = 2.4 + 2.4 + 30 + 28.05

=62.85 mm

E = 706.95 × 100 × 2/32.4 × 62.85

= 69.42%

Strip layout for blanking tools: Blanking tools produce blanks out of the strip or unit stock. None of the edges of the strip or unit stock forms an edge of the blank. Blanking is the most efficient and popular way of producing intricate and closely tolerated components. The profile and accuracy built into the tool will be reproduced on the blank.

Blanks can be positioned in the strip in different ways. The choice of the method depends on the following factors.

- Shape of blank
- Production requirement
- Grain direction
- Burr side
- Stock material.

Shape of the blank: The contour of the blank is the main factor which decides the way in which it is to be positioned.

Production requirement: If lesser production is anticipated more emphasis should be given to material conservation without increasing the tool cost.

Grain direction: When sheets are produced by rolling, the rolling direction orients the grains. Standard sizes of rolled sheets or strips will have the grains along its length. Bending the strip along the grain direction may result in cracks or fractures. If the blank is to be bent at a later stage the strip should take care of the grain direction.

The grain direction should be at right angles or at an angle more than 45° to the direction of the bend when harder varieties of strips are used.

Burr side: In blanking operation, burr is formed on the face of the blank which comes in direct contact with the punch.

In piercing, burr is formed on the face which comes in contact with the die. In specific cases the burr resulting from either blanking or piercing will be required to appear on one particular face of the blank. While deciding the strip layout care must be taken to see that such requirements are met.

Stock material: A comparative study of stock material conservation, tool cost and labour cost is necessary while strip layout is being made. If the stock material is precious every means to conserve the stock material should be employed.

Single row one pass layout: This is the most popular lay out. The blanks are arranged in a single row. The strip is passed through the tool only once to punch out the blanks from it. (Fig 7)

Fig 7

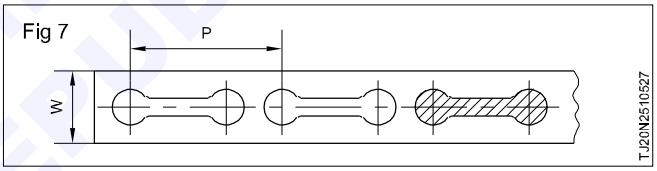

The lay out can be done in two possible ways.

1 Narrow run

2 Wide run

Wide run is preferred due to the following reasons.

Advance distance (pitch) per punching is short. This helps easy feeding. More blanks can be produced from a given length of strip compared to a narrow strip. Therefore only a fewer number of strips are to be handled to produce a given number of blanks. (Fig 8)

Fig 8

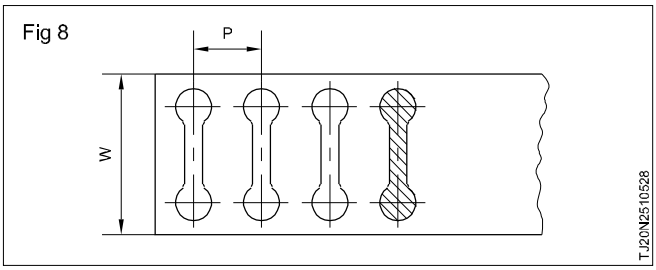

A narrow run is used when the grain direction of the piece part has importance (favorable grain direction for bending or forming).

Blanks having atleast two straight parallel edges

The strip width should be equal to the distance between the parallel sides. The blanks can be produced by cut off or parting operations (Fig 9).

NOT TO BE REPUBLISHED © NIMI

Fig 9

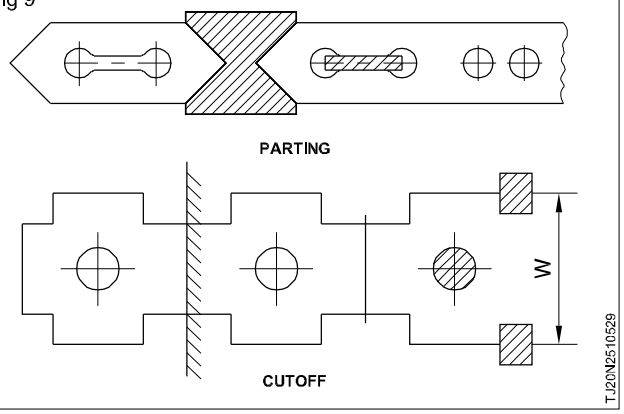

Parting off requires one set of parallel sides. No scrap is produced during the cut off operation. Scrap is produced during parting off.

Blanks having irregular contour: The following factors must be considered for determining the best method of positioning a blank in a strip.

Contour If the blank has two parallel sides it can be produced by cut off operations. The advantages of the cut off or parting operation are

- minimum material wastage
- less tool cost
- no scrap strip to handle
- speeds up production.

Accuracy in strip width : Sheared strips cannot be held to an accuracy closer than +/-0.2 mm. If the blank must be held to closer limits on its width sides, cutting off or parting off cannot be employed. It should be produced with a blanking tool, regardless of parallel sides it may contain.

Flatness : If the blank has to be flat, a blanking tool is preferred. A blanking tool produces considerably flatter components than other tools.

Single row - two pass method (Fig 10)

Fig 10

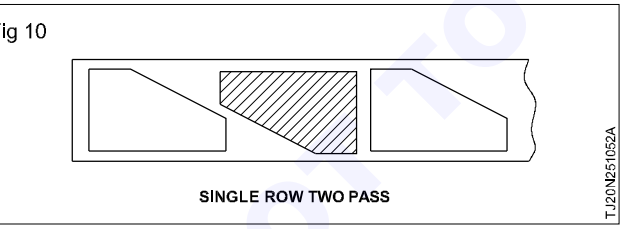

This strip layout requires the strip to be fed twice through the tool. This is to achieve greater economy in stock material utilization.

A two - pass tool requires two stops. The stop used for the first pass should be removed or made to retract (spring loaded stoppers) from the working surface so as not to interfere with the second pass.

The front and back scrap as well as the scrap bridge should be wider than those for the single pass (about 50 to 100%). Two - pass layouts are justified only when the wastage is considerable and the stock material is costly.

Double row layout (Fig 11) : Higher economy can be attained by positioning the blanks in double rows.

Fig 11

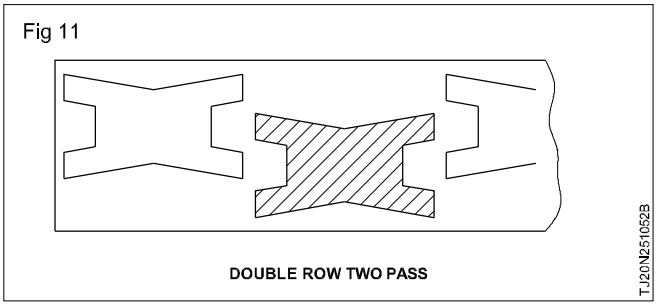

Gang dies (Fig 12) : A gang die consists of two or more similar sets of tool members so as to produce two or more number of components during a single stroke of the press ram. A gang die eliminates the cumbersome process of double pass.

Fig 12

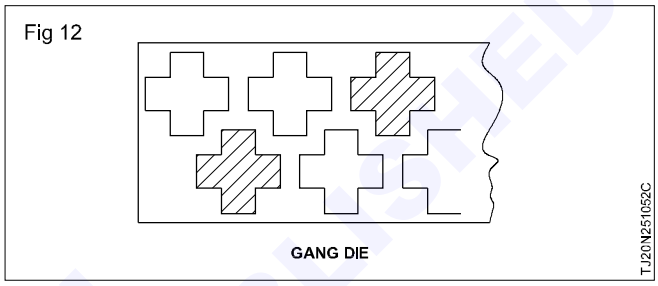

The higher tool cost will be offset by higher rate of production. Gang dies are not recommended for very complex works.

Angular layout (Fig 13): For more economy some piece parts are laid out in angular position.

Fig 13

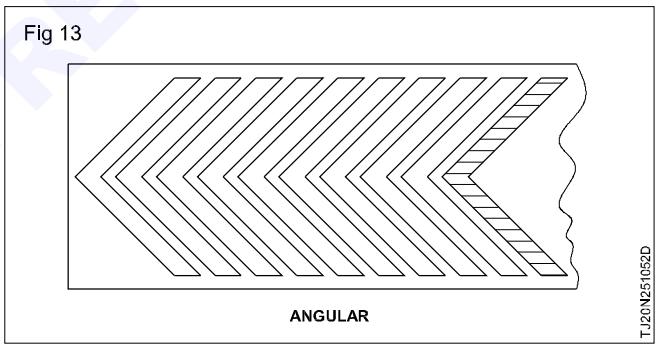

Economy factor or scrap percentage

The cost of stamped component mainly depends up on the material cost. Therefore the aim of strip layout should be to produce maximum number of components from a given strip. Strip layout should be designed with maximum economy.

Economy of any strip layout in percentage of the area of the strip is found out by the following formula:

$$= \frac{\text{Area of blank} \times 100 \times \text{No. of rows}}{\text{Width of strip} \times \text{pitch}}$$

A minimum economy of 60% should be aimed at while laying out the strip. The position of the blanks in the strip should be carefully laid out to avoid unnecessary scrap.

© NIMI NOT TO BE REPUBLISHED

Punches

Objectives: At the end of this lesson you shall be able to
- **state the function of the punch**
- **differentiate between cutting and non - cutting punches**
- **explain the constructional features of the different types of punches**
- **state the type of stress on punches**
- **determine the size of punch required to withstand buckling.**

Punches are classified into

1 Cutting punches

2 Non - cutting punches

3 Hybrid punches.

Cutting punches: These perform operation like blanking, piercing, notching, trimming etc. (Fig 1)

Fig 1

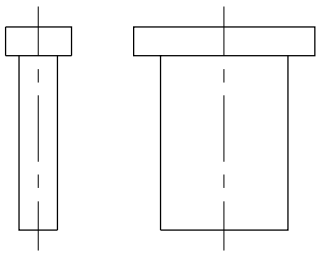

Non - cutting punches: These perform operation like bending, forming, drawing etc. (Fig 2)

Fig 2

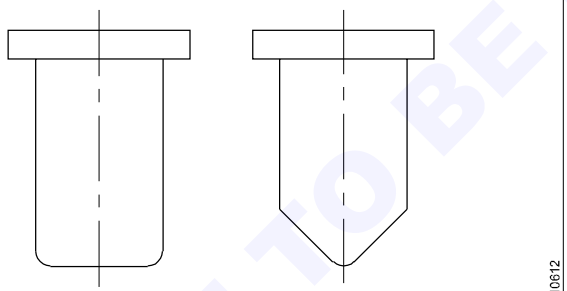

Hybrid punches: They perform cutting and non - cutting, operations (Fig 3) Eg. shear and form.

Fig 3

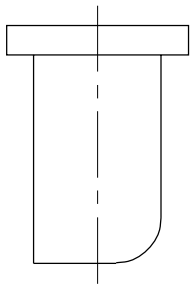

Punch groups

Punches can also be grouped into segregated punches and integrated punches.

Segregated punches: These punches are positioned and retained by means of self - contained screws and dowels. (Fig 4)

Fig 4

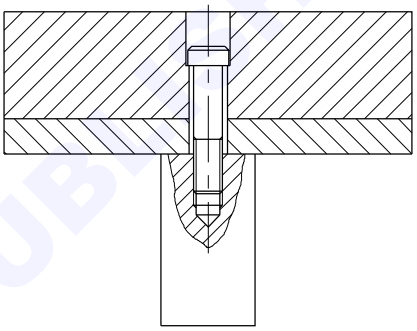

Integrated punches: These punches are located and positioned by punch holders. (Fig 5)

Fig 5

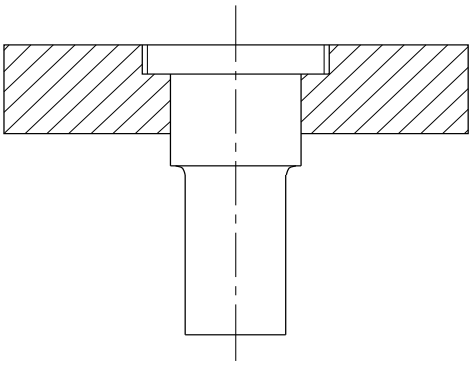

Types of punches

Plain punches : The cross - section of the complete punch is the same as the cutting contour. (Fig 6)

Pedestal punches : The base area of this punch is larger. The cutting force is distributed over a larger area. (Fig 7) This is used for punching thicker material (where force is high).

Offset pedestal punches : The pedestal punches have their bases offset. The cutting forces are non - uniform in these punches. The reason for off - setting is for

© NIMI NOT TO BE REPUBLISHED

accommodating other components in the assembly. Another reason is to increase the machining and grinding accessibility. (Fig 8)

Fig 6

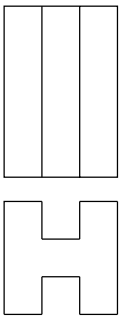

PLAIN PUNCHES

TJ20N2510616

Fig 7

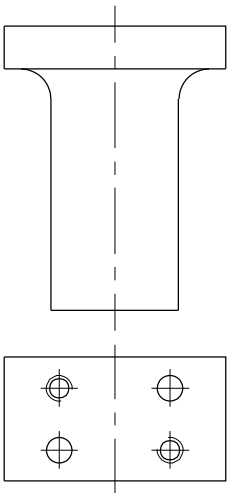

PEDESTAL PUNCHS

TJ20N2510617

Fig 8

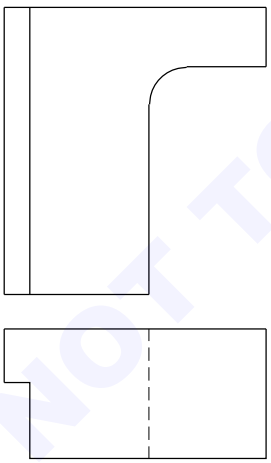

OFFSET PEDESTAL PUNCHES

TJ20N2510618

Keyed punches: Keys are provided in non - circular punches to prevent their rotation. (Fig 9)

Mounting of punches in punch - holders

Headless punches: This is a plain punch. The punch is positioned in the opening provided in the punch - holder. The punch is fastened to the top plate by means of screws. No dowels are used. (Fig 10)

Fig 9

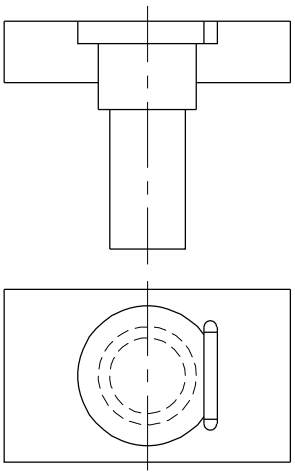

KEYED PUNCH

TJ20N2510619

Fig 10

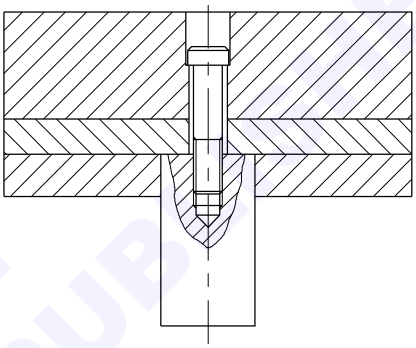

HEADLESS PUNCH

TJ20N2510619A

Step head punches: These punches are fixed in the punch holder without screws (Fig 11) and dowels. The fit, between the punch and the punch holder is H7/m6.

Fig 11

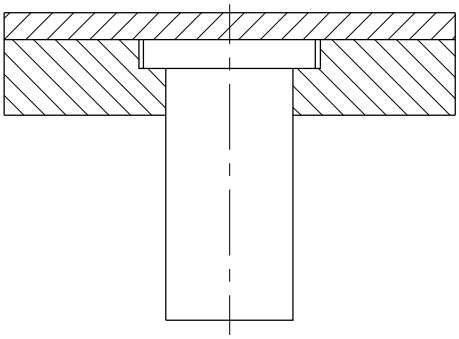

SHOULDERED PUNCH

TJ20N2510619B

Bevel head punches: Angular seating is provided for the punch. The angle is between 30° and 45°. The bevelled portion is either machined or peened. (Fig 12)

Floating punches: They are made loose in the punch holder and are guided in the stripper plate. (Fig 13)

Perforators: Punches of diameter 2.5 mm or below are called perforators. (Fig 14)

Bevel head perforators: A bevelled seating is provided for the punches. (Fig 15)

Headless perforators: These punches do not have shoulders. A whistle notch is milled on the shank of

© NIMI NOT TO BE REPUBLISHED

the punch. A screw from the side is used to fasten the perforator in position. (Fig 16)

Fig 12

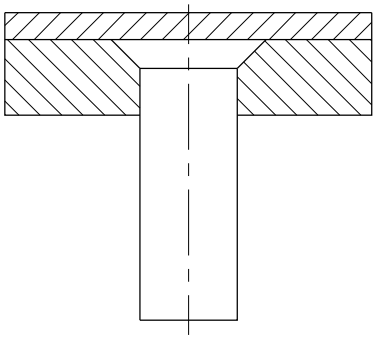

BEVEL HEAD PUNCH

TJ20N2510 61C

Fig 13

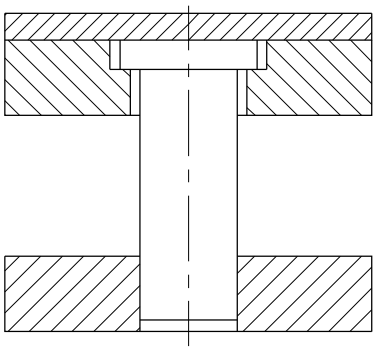

FLOATING PUNCH

TJ20N2510 61D

Fig 14

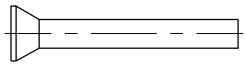

PERFORATOR

TJ20N2510 61E

Fig 15

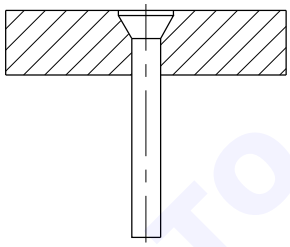

BEVEL HEAD PERFORATOR

TJ20N2510 61F

Fig 16

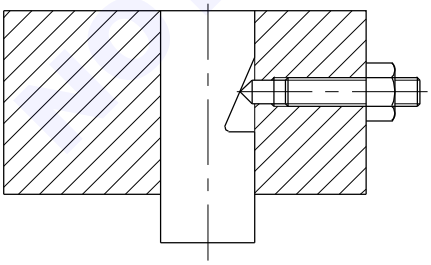

HEADLESS PERFORATOR WITH WHISTLE KNOTCH

TJ20N2510 61G

Step - head perforator: To give strength to the perforator the length of cutting diameter is kept to the minimum. A step of large diameter is provided for strengthening the punch. (Fig 17)

Fig 17

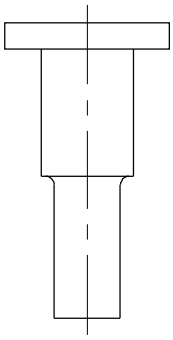

STEPHEAD PERFORATOR

TJ20N2510 61H

Step - head perforator shank - less: The shank diameter is more by 0.025 mm than the point diameter. (Fig 18).

Fig 18



STEP HEAD PERFORATOR (SHANKLESS)

TJ20N2510 61I

Pyramid perforator: This type of perforator is used when there is a large difference between the point and shank diameters. (Fig 19)

Fig 19

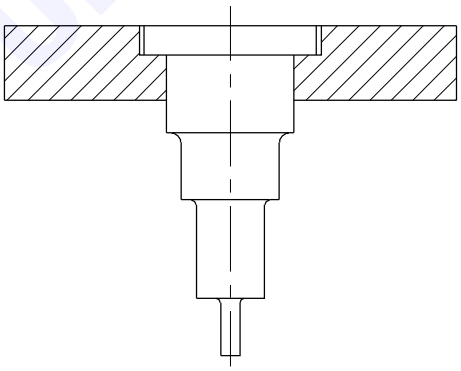

PYRAMID PERFORATOR STEPHEAD

TJ20N2510 61J

Quilled punches: Slender punches may buckle and break during operation. Quills are provided to prevent buckling.

Quill is a sleeve, inside which the punch is guided. (Fig 20)

Fig 20

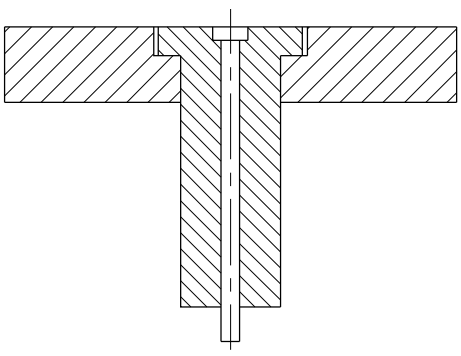

QUILLED PERFORATOR

TJ20N2510 61K

© NIMI NOT TO BE REPUBLISHED

Slug ejector perforator: Sometimes slugs stick to the punches. Slug ejector punches are used in such cases. Spring activated pins (Fig 21) or high pressure air is used to eject slugs. (Fig 22)

Fig 21

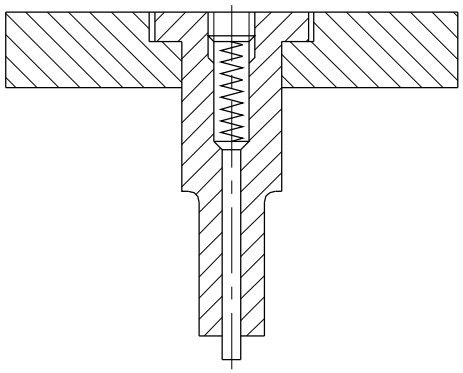

SLUG EJECTOR PUNCHES, SPRING

TJ20N251061L

Fig 22

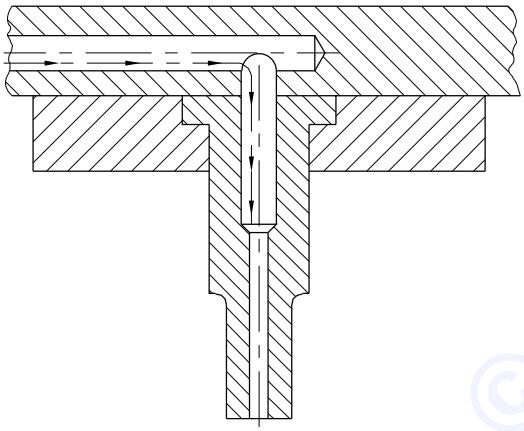

SLUG EJECTOR PUNCHES, AIR

TJ20N251061M

Buckling of punches : The punches in a press tool are subjected to compressive stresses during the cutting operation. If the stress is excessive, thin punches may fail due to buckling. (Fig 23)

Fig 23

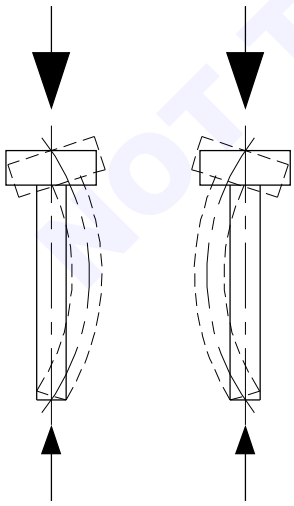

TJ20N251061N

The maximum force that a punch can withstand buckling can be calculated from the following equation

$$FB = \frac{\pi^2 EI}{lp^2}$$

FB = Maximum force beyond which buckling occurs.

E = Modules of elasticity of punch material (in GN/m^2)

I = Moment of inertia in mm^4.

l_P = Length of punch in mm.

The cutting force coming on the punch should be less than or equal to the buckling force.

Example 1

It is possible to punch 1 mm brass sheet with a 5 mm square punch

length of punch = 60 mm

τ max = 320 N/mm^2

Shear force required to pierce the hole = l × s × τ max

l = 5 × 4 = 20 mm

s = 1 mm

τ max = 320 N/mm^2

Shear force = 20 × 1 × 320

= 6400 N

= 6.4 kN

Buckling force =

E = 210 GN/m^2

52.08 mm^4

l_P = 60 mm

$$\text{Buckling force} = \frac{(3.14)^2 \times 210 \times 10^9 \times 52.08 \times 10^{-12}}{(0.06)^2}$$

= 29953.5 N = 29.9535 kN.

The punch can withstand a force of 29.9535 kN. The force coming on the punch is only 6.4 kN. Therefore it is possible to use the punch.

Example 2

Find the smallest dia of the punch to pierce 2 mm mild steel sheet.

Length of the punch = 60 mm, E =210 GN/m2

Assume press force 800 N.

$$\text{Press force FB} = \frac{\pi^2 \times E \times I}{l^2}$$

$$800 \times 10^{-9} = \frac{(3.14)^2 \times 210 \times 1}{(0.06)^2}$$

$$800 \times 10^{-9} \times (0.06)^2 = (3.14)^2 \times 210 \times I$$

© NIMI NOT TO BE REPUBLISHED

$$1.389547 \times 10^{-12} = \frac{\pi}{64} \times d^4$$

$$V = \frac{\pi DN}{1000} = m/min$$

$$d = 2.8307619 \times 10^{-11}$$

$$d = 2.3066mm$$

$$= 2.31mm$$

$$I = \frac{800 \times 10^{-9} \times (0.06)^{-2}}{\frac{2.88 \times 10^{-} 210}{2070.516}}$$

$$I = 1.389547 \times 10^{-12}\ m^4$$

$$d^4 = \frac{1.389547 \times 10^{-12} \times 64}{\pi}$$

$$I = (\pi \div 64)d^4$$

Mechanical strength of punches

The punches in press tools are always subjected to excessive impact, compression force or tensile force and it is apt to fracture due to buckling. There fore it is necessary to thoroughly conform its mechanical strength up on designing. The following equation specifies basic method to carryout the calculation to determine the mechanical strength.

Compression stress generated on the punch

p = C.F/ A = l x s x tmax / A

p = compressive stress in kg/cm^2

C.F = cutting force in kg

l = length of shearing in mm

Tmax = shear strength of material

A = cross sectional area of punch in mm^2

Maximum permissible punch load

Fb = (π^2 x E x I) / L^2

Fb = Maximum permissible load beyond which buckling occurs in kg

E = Modules of Elasticity in kg/mm

(For steel it will varies from 20000 to 22000kg/mm)

I = Moment of Inertia in mm^4

L = length of punch in mm

The ultimate condition is when:

Buckling force = cutting force required for the operation = shear force on the punch.

The values of the moment of inertia for different cross section of punches are given below:

Cross-section	Moment of inertia
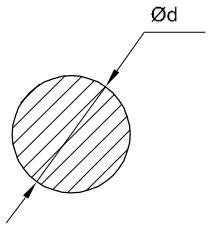	$\pi d^4 /64$
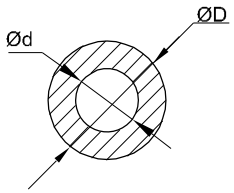	$\pi / 64 (D^4 - d^4)$
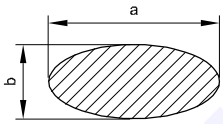	$\pi ab^3 /64$
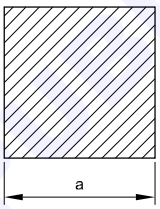	$a^4 / 12$
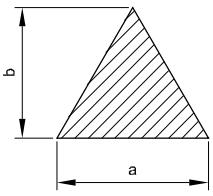	$ah^3 / 36$
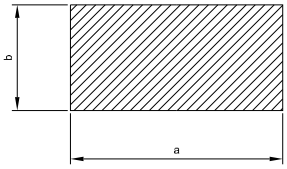	$ba^3 / 12$
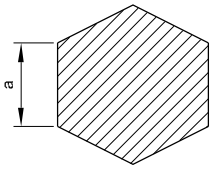	$0.5413a^4$

© NIMI NOT TO BE REPUBLISHED

By assuming E to 21000kg/mm (steel or equivalent) and π to be 3.14 the following equation applies for maximum permissible length of punch.

$L < \frac{56.8 d^3}{s.T max}$

L = length of punch in mm

D = diameter of punch in mm

S = sheet thickness in mm

T max = Shear strength of material

Example 1

An hexagonal nut cross section of steel component having side length of 6mm has to be blanked From a 6 mm sheet having shear strength of 40kg/mm^2. Calculate maximum length of punch which will with stand the cutting force?

solution

Cutting force or punching force = $I \times s \times T max$

$= 6 \times 6 \times 6 \times 40$

= 8640 kg

Moment of inertia for hexagon = $0.5413a^4$

$= 0.5413 \times 6^4$

= 701.8 mm^4

Maximum permissible punch load(buckling force)

$$Fb = \frac{\pi^2 \times E \times I}{L^2}$$

For ultimate condition Bucking force = cutting force required for the operation = force on the punch

L = length of punch in mm

8640 = $3.14^2 \times 21000 \times 701.8 / L^2$

L^2 = $3.14^2 \times 21000 \times 701.8 / 8640$

L^2 = 16818.15

L = “16818.15

Maximum Length of punch = 128.61mm

Example 2

Calculate the possibility of punching 2 mm brass sheet with 5 mm square punch of 60mm length? Tmax = 32 kg /mm^2.

Solution

Shear force required to pierce the hole = $I \times s \times T max$

I = cut length in mm = 20mm

s = sheet thickness in mm = 2 mm

T max = shear force in kg/mm^2 = 32kg/mm^2

Shear force = 20 x 2 x 32

= 1280 kg

= 5 x 4 = 20mm

Buckling force = $(\pi^2 EI) / L^2$

E = 21000 kg/mm

Moment of inertia I = $a^4/12 = 6^4/12$ = 108 mm^4

Length of punch L = 60 mm

Buckling force = $(3.142 \times 21000 \times 108 \times)/60^2$

= 6211.548kg

As the punch can withstand a force of 6211.548kg and the force coming on the punch is only 1280kg. it is possible to use the punch.

Example 3

Find the smallest diameter of the punch of 60mm length to pierce 1 mm mild steel sheet T max is 36 kg/mm^2.

Assume FB = 80Kg

Press force F = $(\pi^2 \times E \times I) / L^2$

80 = $(3.14^2 \times 21000 \times 1)/ 60^2$

$80 \times 60^2 = 3.14^2 \times 21000 \times I$

I = $(80 \times 60^2) / 3.14^2 \times 21000$

= 1.39

= 1.39

I = $(\pi/64)d^4$

1.39 = $(\pi/64)d^4$

d^4 = $1.39 / (\pi / 64)$

d^4 = 28.331

d = 2.307 mm

= 2.31 mm

Dies

Objectives: At the end of this lesson you shall be able to

- **state the function of dies**
- **differentiate between solid dies and split dies**
- **state the basic design requirement of a die**
- **state the factors for selecting split die**
- **state nesting**
- **explain nesting methods.**

Dies

Dies can be classified into solid dies and split dies.

Solid die (Fig 1): A solid die consists of only one metal block. The required shape of opening is made on this block.

© NIMI NOT TO BE REPUBLISHED

Fig 1

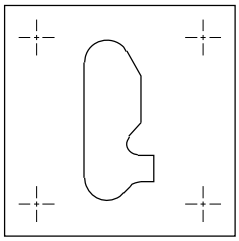

T.J20N2510621

Split die (Fig 2): The die contour is built up from two or more blocks.

Fig 2

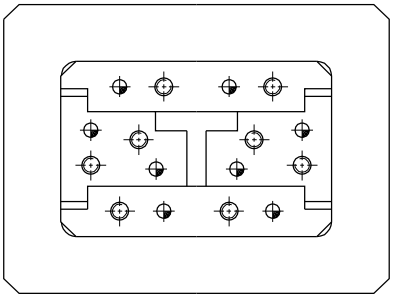

T.J20N2510622

Material: Die blocks are made out of non - shrinking tool steels.

They are hardened and tempered to 58 to 62 HRC. Non shrinking steel is selected to avoid dimensional instability, to withstand the cutting forces and to resist wear. The die is hardened and tempered.

Design requirements

The die block (Fig 3)

Fig 3

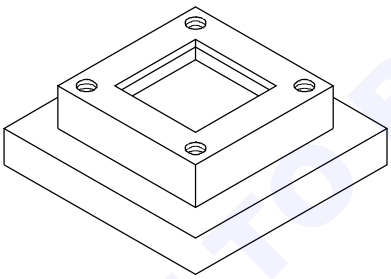

T.J20N2510623

The thickness is influenced by the following factors.

1 Type of operation

2 Expected tool life

3 Properties of material used in the manufacture.

General guidelines for die block thickness

Stock material	Die block thickness in mm		
	Die block length upto 125 mm	Die block length upto 125 to 200	Die block length upto 200 to 400
Upto 1 mm	16	20	24
1 to 2 mm	20	24	28
2 to 3 mm	24	28	32
3 to 4 mm	28	32	36
4 to 6 mm	32	36	50
6 mm and above	36	40	60

Wall thickness for dies (approximately up to a working area of 100*100 mm) 1.5 times the die block thickness. (Fig 4)

Fig 4

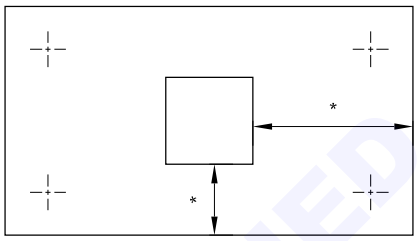

T.J20N2510624

For tool having larger working area than 100*100, 2 times the die block thickness.

Screw and dowel holes (Fig 5)

Fig 5

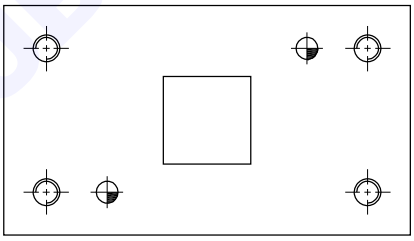

T.J20N2510625

Screw and dowel holes should not weaken the die. They should be away from the edge and opening of the die by 1.5 d.

d = dia of screw or dowel

Factors influencing selection of split dies

1 Reduces cost of material.

2 Helps easy machining.

3 Reduces heat treatment failures.

When the die opening is very small for internal working, sectional construction is preferred. When the component profile is complex, split die construction makes manufacturing easy. (Fig 6)

When the die opening has many sharp corners, a split die avoids cracking of die during hardening.

Perishability (Fig 7): Manufacture of replacement of perishable portions is easier when the die is split.

Grinding of profiles: Conventional internal grinding is not possible on complex profiles. Split construction allows easier grinding.

© NIMI NOT TO BE REPUBLISHED

Fig 6

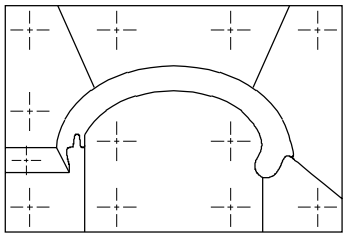

COMPLEXITY OF DIE OPENING

TJ20N2510626

Fig 7

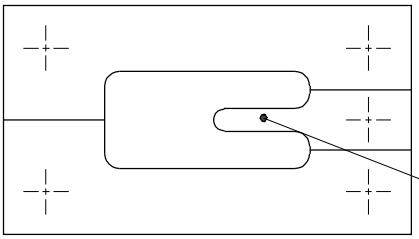

PERISHABILITY

TJ20N2510627

Results of splitting: Downward thrust of the cutting forces may try to tilt the splits. (Fig 8)

Fig 8

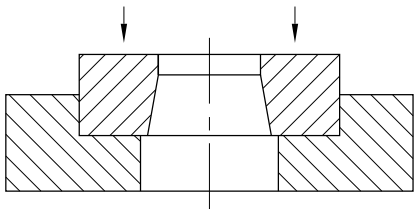

RESULTS OF SPLITTING

TJ20N2510628

Lateral displacement of splits may take place during cutting. (Fig 9) To avoid the above effective fastening of the splits is a must.

Fig 9

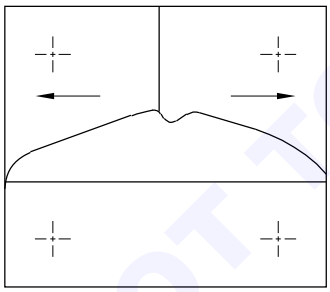

LATERAL DISPLACEMENT

TJ20N2510629

Methods of fastening

Only screws and dowels are used when the press force is less.

Nesting is done when cutting forces are greater. (Nesting does not eliminate the necessity of screws and dowels.)

Nesting: Die sections can be nested by

- pocket milled in the die block
- separate nest blocks.

Pocket milled in die blocks (Fig 10): The die splits are tightly fitted in the pocket milled in the die block.

Fig 10

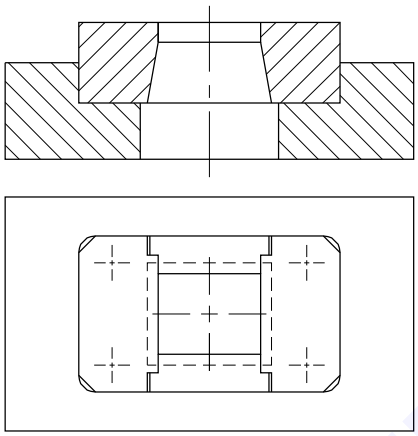

POCKET MILLED IN THE BLOCK

TJ20N251062A

To facilitate easy and accurate assembly and dismantling of splits, hardened liners are used. (Fig 11)

Fig 11

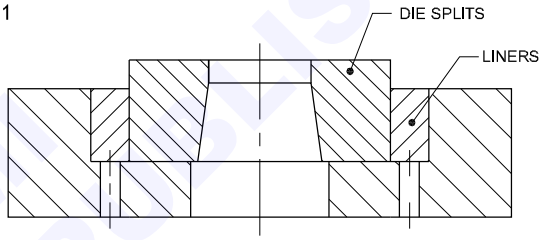

LINERS

TJ20N251062B

Liners also avoid shearing of the walls of the pocket by splits while assembling.

Any positional error of splits in the pockets can be eliminated by varying the thickness of the liners.

Knock out holes are provided in the die pockets to facilitate removal of liners.

Nest blocks (Fig 12): Separate nest blocks are preferred to direct nesting for the following reasons.

Fig 12

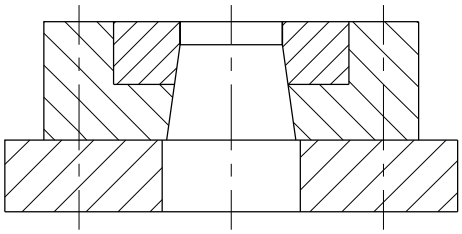

NEST BLOCK

TJ20N251062C

- pockets weaken the die.
- regrinding possible without dismantling the die.

Die bushes (Fig 13): Hardened die bushes are fitted in mild steel plates for large piercing tools.

Carbide dies (Fig 14): Tungsten carbide is used as die material when

- the production rates are high

© NIMI NOT TO BE REPUBLISHED

Fig 13

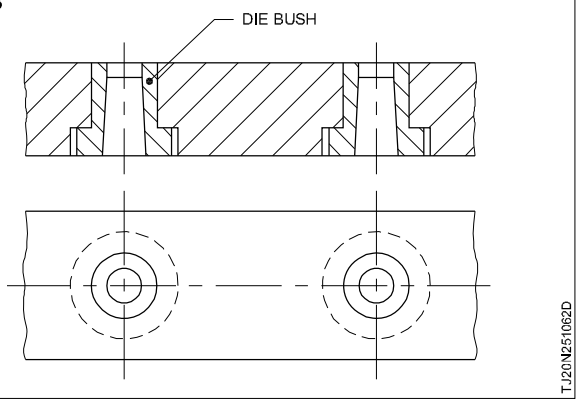

- the parts have close tolerance.

Carbide dies are used in the manufacturing of blanking, piercing, trimming, forming and drawing operations.

The carbide die insert is subject to high impact load. The inserts should be supported externally by pressing the carbide die into a hardened steel case.

Fig 14

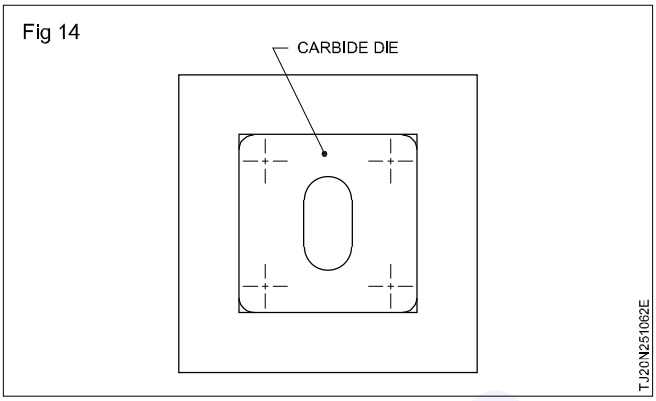

© NIMI
NOT TO BE REPUBLISHED

Stoppers

Objectives: At the end of this lesson you shall be able to
- **state the function of a stopper**
- **differentiate between stop position and registry position**
- **differentiate between primary and secondary stoppers**
- **differentiate between side acting and end acting trigger stopper**
- **state the function of a headed pin stop**
- **state the function of a retractable stop**
- **state the function of finger stops.**

Function of stoppers: The stopper ensures that the strip is moved through one pitch distance, after the completion of the punching operation. When the strip is pushed forward, the stopper stops the movement of the strip after one pitch length. (Fig 1)

Fig 1

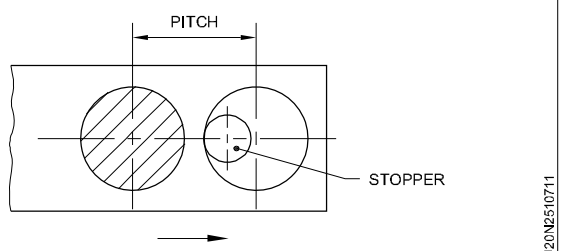

Classification of stoppers

Stoppers are classified into three categories.

1 Primary

2 Secondary

3 Final.

The first stop in the tool is called the primary stop. The last stop in the tool is called the final stop. The stops in between primary stop and the final stop are called secondary stops. (Fig 2)

Stop position: This is the location at which the stock strip is stopped. (Fig 3)

Fig 2

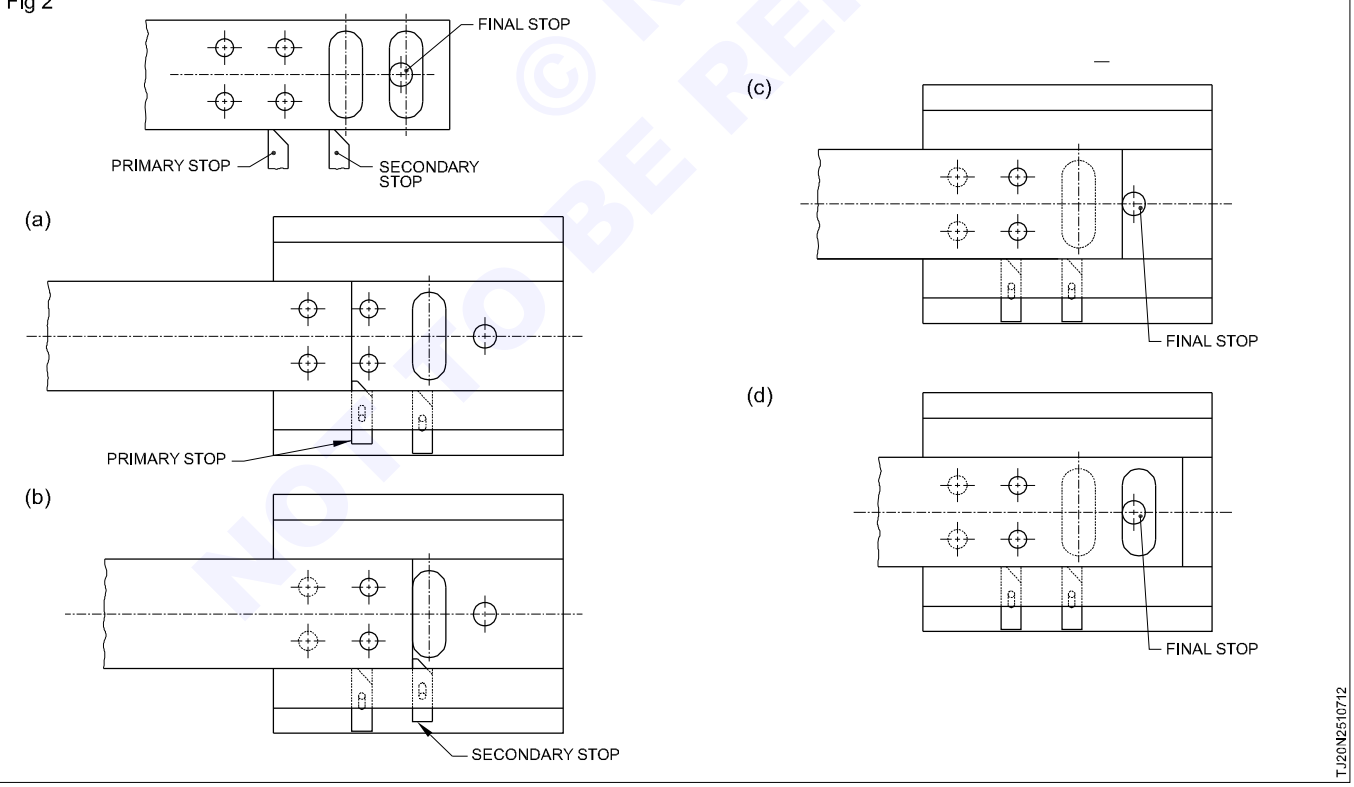

Registry position

This is the exact location in which the stock strip must be positioned in order to obtain dimensionally correct components. The work is located by the stop and is registered by the pilots. The registry position may or may not be the same as the stop position. When a stop functions as an approximation gauge the stop position does not coincide with the registry position. If the stop

© NIMI NOT TO BE REPUBLISHED

acts as a true gauge the stop position and the registry position are the same. If a stock strip is piloted the stop need to act only as approximation gauge. (Fig 4)

Fig 3

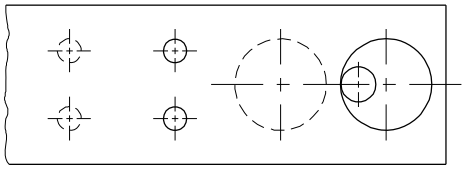

T.J20N2510713

Fig 4

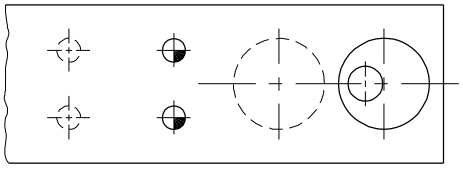

T.J20N2510714

You will study about pilots in the lesson 'pilots'.

Primary stops act as true gauge.

Secondary stops normally serve as approximation gauges.

Types of stops

Solid stops: This is a hardened steel block mounted at the required location. The strip butts against this and is stopped. (Fig 5)

Fig 5

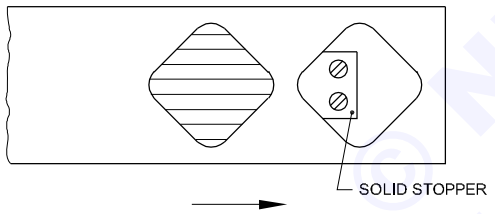

T.J20N2510715

Plain pin stop: It is a plain cylindrical pin mounted in the die block. A clearance hole for the pin stop in the bottom plate is provided (Fig 6) for the following reasons.

Fig 6

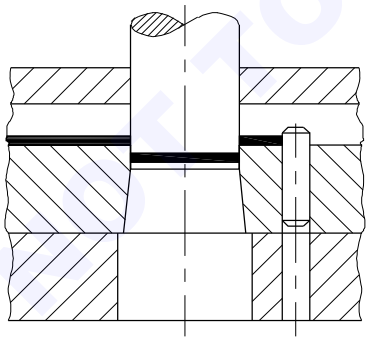

T.J20N2510716

To permit adjustment of the height of the pin stop without removing the die block from the assembly.

While re-sharpening the die the stop in can be removed.

The pin can be driven down in the event of misfeed. This reduces the chance of damage to the tool.

Headed pin stop: When the stop is to be very near (Very small scrap bridge) to the die opening, a headed pin stop is used. A plain pin stop cannot be used in such cases because the opening made for locating the stop will weaken the die. (Fig 7)

Fig 7

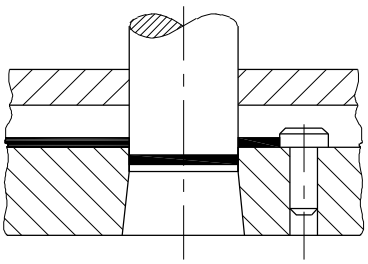

T.J20N2510717

The mounting hole of the headed pin stop will be away from the die opening.

Spring - loaded pin stop: It is a spring pin located at the required stopping position. These stoppers do not require clearance in the opposing tool members. The pin is pressed down by the opposing tool member during operation. (Fig 8)

Fig 8

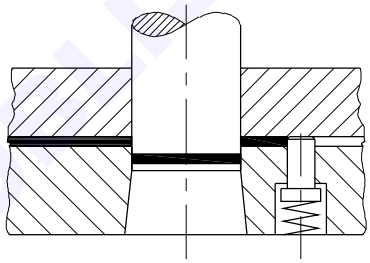

T.J20N2510718

Finger stops: In progressive tools designed for manual feeding, finger stops locate the strip for each station except for the final station. This stop is actuated manually. It is mounted in the stripper plate. Provision is made for moving the stopper through a predetermined distance. It is pushed inwards to enable the stock material to halt against it.

After the press stroke the stopper is released. When a new stock strip is fed the stopper is to be actuated again. (Fig 9)

Fig 9

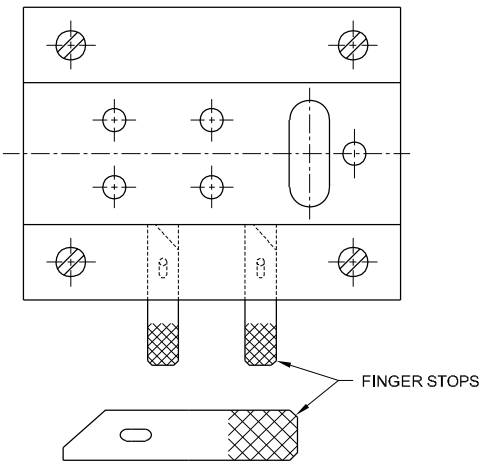

T.J20N2510719

© NIMI NOT TO BE REPUBLISHED

Trigger stops: For faster manual feeding, trigger stops are preferred. There are two types of trigger stops

1 Front acting (Fig 10)

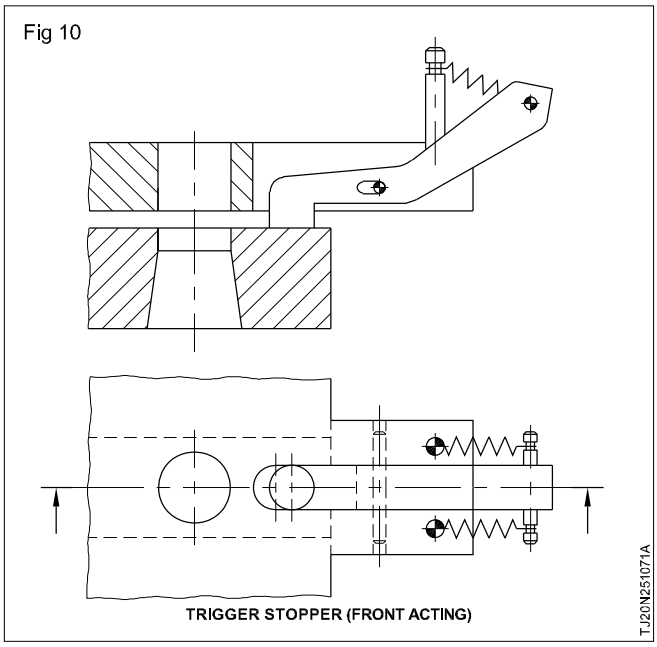

2 side acting (Fig 11)

The working mechanism for front acting and side acting trigger stops is the same.

The front acting trigger stop is mounted in the front end of the tool and the side acting trigger stops is mounted in the side of the tool.

The lever shaped trigger stop fits freely in the slot milled in the guide plate. The slot allows for the necessary movement of the trigger. An inclined set spring at the other end of the trigger holds the trigger in position. When the strip is pressed against the tip face of the trigger, the trigger moves backwards and stops against the wall of the slot.

This allows the strip to advance. This advancement is equal to one margin width.

When the tool is tripped, a knocker bar fixed to the top assembly of the tool comes down and knocks the free end of the trigger. This action lifts to clear the strip thickness and then jumps back to its old position to fall on the strip (blanked portion). The strip can be fed forward through one pitch length.

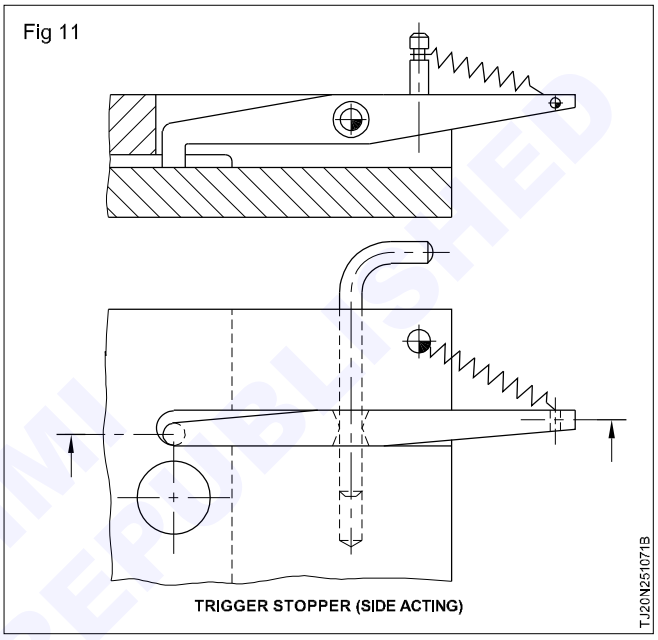

Strippers

Objectives: At the end of this lesson you shall be able to
- **state the function of a stripper**
- **state the constructional features of travelling stripper**
- **differentiate between fixed stripper and travelling stripper**
- **state the limitation of fixed strippers**
- **state the factors favouring travelling strippers**
- **state the method of suspension of travelling strippers**
- **explain stripping force in relation to piercing and blanking.**

Stripper

During punching operation, the punch shears the strip and enters into the die. After the punching operation the punch goes up. During this time the strip should be advanced through one pitch length to make it ready for the next operation. But the strip may stick to the punch and may go up along with it after the cutting operation. This will hamper feeding of the strip. (Fig 1)

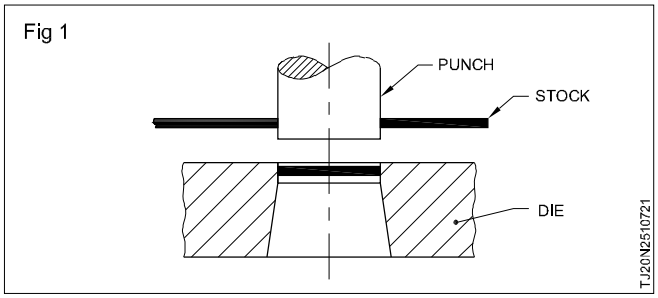

The main function of the stripper is to strip the stock material off the punches after each stroke. (Fig 2)

The stripper may act as a guide for the punches. It also may hold the strip flat while the strip is being punched.

Types of strippers

Strippers can be classified into two groups

1 Fixed strippers

2 Travelling strippers.

© NIMI NOT TO BE REPUBLISHED

Fig 2

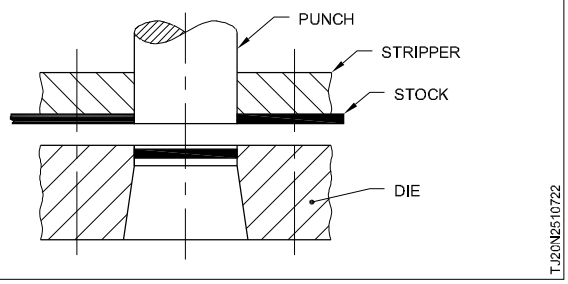

Fixed strippers (Fig 3)

Fig 3

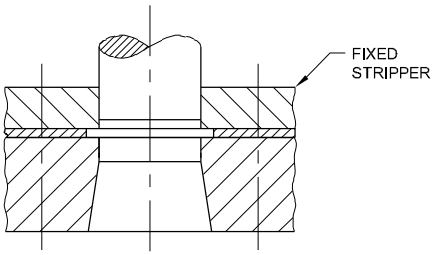

Fixed strippers are economical to manufacture. A fixed stripper is positive in performance. It can exert strong stripping force.

Box stripper (Fig 4)

Fig 4

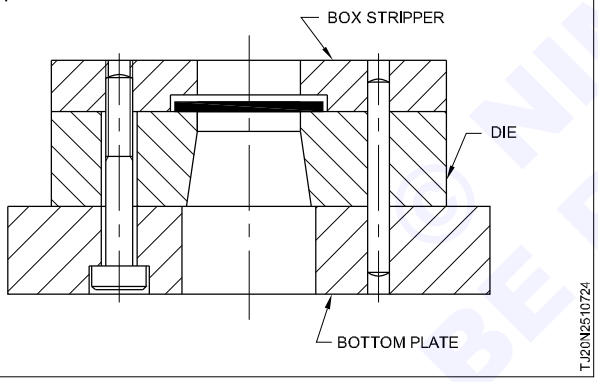

A box stripper is a type of fixed stripper. The stripper is clamped and located directly on the die block.

In guide plate tools, the alignment of the punch and die is ensured by guiding the punch in the stripper.

A channel is milled in the stripper to act as a strip guide. The width of the channel is equal to the strip width. Adequate clearance is provided to allow for the variation in the width of the strip. The height of the channel should be sufficient to feed the strip easily. It depends on the type of the stop used. (When a fixed pin stop is used the clearance should be more because the strip has to be lifted over the stop for feeding). The back edge of the channel may serve as a back gauge to correctly position the strip.

Travelling strippers (Fig 5)

Under the following conditions a fixed stripper may be impractical.

When it is necessary to clamp the strip in addition to its stripping function.

Fig 5

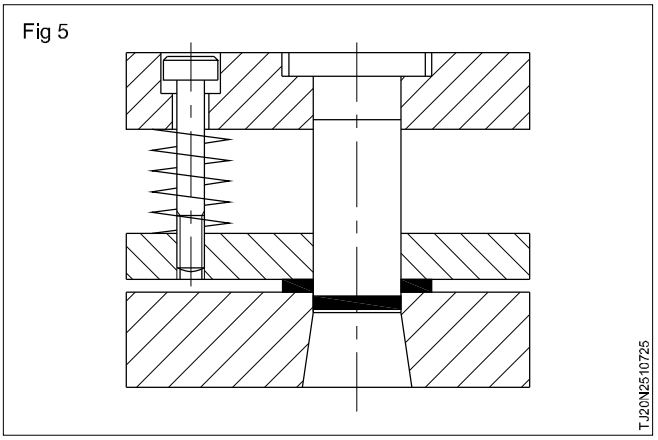

When it is necessary to keep the punches engaged in the stripper during the entire cycle.

In pillar guided tools, fragile punches are guided in the stripper to prevent breakage of punches.

When piece parts are to be pressed from unit stock or for secondary operations, increased visibility of die space provided by the travelling stripper allows faster loading and unloading of piece parts, thereby increasing the production.

Travelling strippers are actuated compression springs, disc springs (bellevelle washers) pur springs (Fig 6) or the hydraulic or pneumatic die cushions of the press.

Fig 6

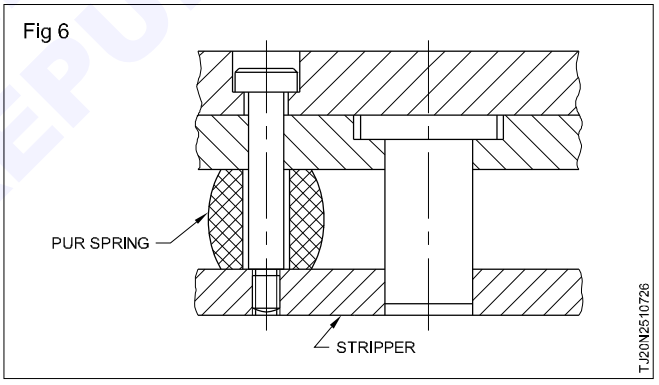

Suspension of travelling strippers: Travelling strippers are suspended as well as limited in travel by screws known as limit bolts. (Fig 7)

Fig 7

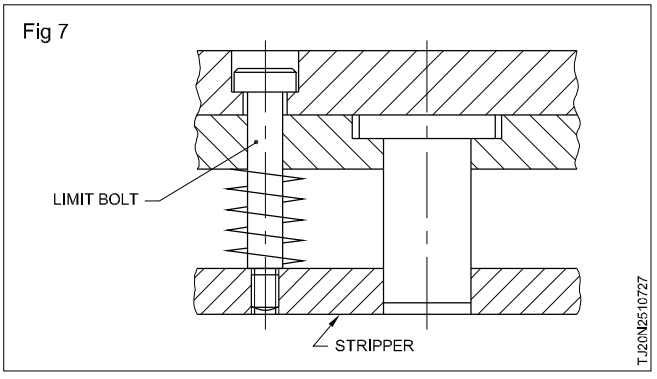

Travelling strippers should project from the face of the punches by an amount of 0.1 mm for light work and 15 mm for heavy work.

When the cutting punches are sharpened, they become shorter, thereby, increasing this distance.

© NIMI NOT TO BE REPUBLISHED

The stripper has to travel more to facilitate the punch for cutting operation. This affects the smooth working of the tool. The design of limit bolts should allow for the adjustment of stripper suspension.

When socket head screws are used, the stripper adjustment is attained by reducing the thickness of the compensator washer. (Fig 8)

Stripping force: Stripping for most of the operations ranges from 10 to 20 percent of the cutting force.

If the tool has more than one punch the stripping force of the tool is the sum total of the stripping forces required for each punch.

The following factors affect stripping force:

1 **Stock material:** Materials which have a high friction value and materials which tend to cling are more difficult to strip.

Eg. Silicon steel, stainless steel etc.

2 **Surface condition of side walls:** A punch which has a smooth finish on it's side walls strip easily.

Fig 8

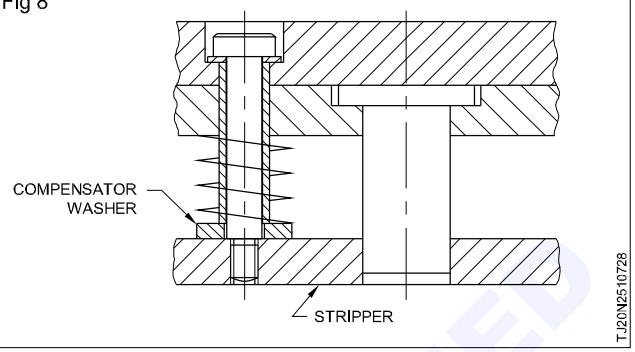

Gauges

Objectives: At the end of this lesson you shall be able to
- **stage the function of a gauge in a press tool**
- **state the dimensional requirements of gauges**
- **state the necessity of nest gauges for loading unit stock**
- **state the essential features of nest gauges**
- **describe the different types of nest gauges.**

Gauges

In press tools the stock material is fed in the form of long strips. The strip should be guided longitudinally during its movement through the tool. The gauges guide the strips in the tool. (Fig 1)

Fig 1

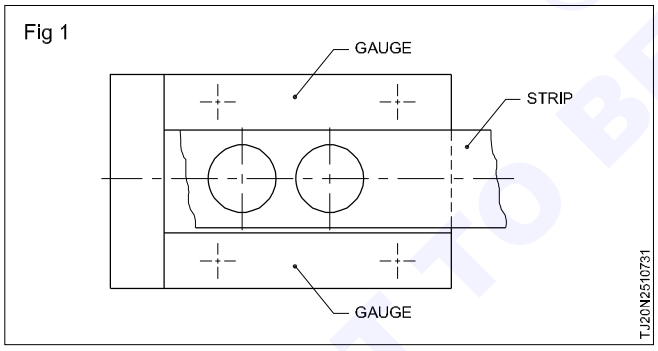

When unit stock is used pin gauges nest (locate) them in the required position. (Fig 2)

Back gauge and front gauges: Whenever the stock material is fed in the form of a strip it is fed in between the back gauge and the front gauge. The back gauge is the one which is on the far side of the press operator or located on the rear side of press tool. The front gauge is on the near side of the operator or located in the front portion of the press tool. While feeding, the operator should always keep the strip pressed against the back gauge. (Fig 3)

The back gauge is the actual gauging member and the function of the front gauge is only to provide approximate gauging. The required dimensional coordinates are

Fig 2

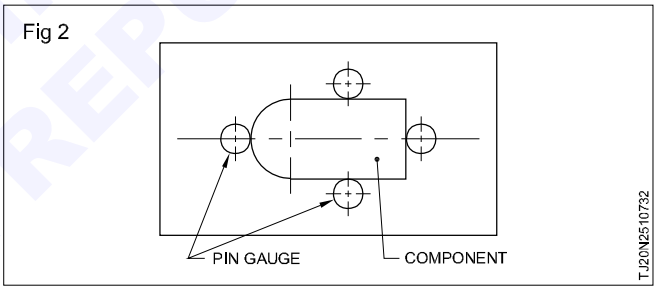

Fig 3

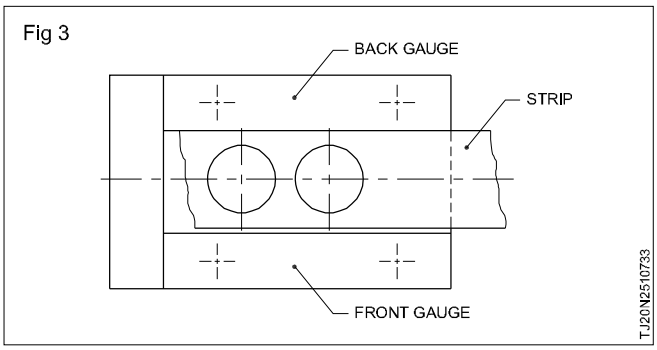

maintained from the back gauge to the die opening.

Bulge clearance: Thick and soft materials tend to bulge sidewise as soon as the blanking operation is performed. This makes it difficult to feed as well as to gauge the strip further. A bulge clearance is provided to overcome this. Bulge clearance is provided usually in the back gauge only. (Fig 4)

Size of back gauge and front gauge: The gauges should be thick enough to avoid binding of the strip between the stripper and the die block.

© NIMI NOT TO BE REPUBLISHED

Fig 4

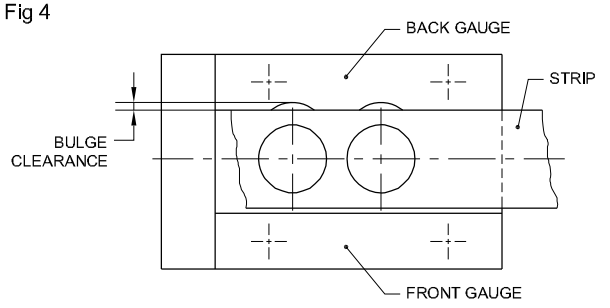

The recommended thicknesses are 3 mm for sheets up to 1.5 mm thick and strip thickness +1.5 mm for strips thicker than 1.5 mm. This is recommended when the tool employs trigger stops.

The space between the back gauge and the front gauge is equal to the width +0.5 mm if roll feed is used. It is thickness plus 1 mm for manual feeding. For low production tool gauges are made from cold rolled steel.

Where production is high they are manufactured from tool steels and hardened and tempered fully or hardened and tempered inserts are fixed to the soft gauges.

Extended back gauge: For easier gauging the back gauge is extended beyond the die on the feeding side. Its length is equal to the strip width for roll feeding and two and a half times the strip width for manual feeding. (Fig 5)

Strip support: During manual feeding, to reduce fatigue to the operator, a strip support should be provided while feeding pliable (flexible) strips. The strip support should be made wider and brought closer to die block to provide better support and guidance. Roll feed does not require strip support. (Fig 5)

Fig 5

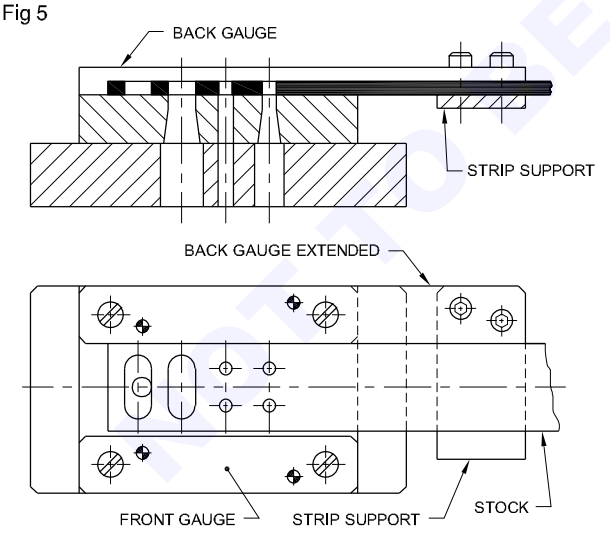

Pushers: Pushers are provided to keep the strip firm against the back gauge during its travel through the tool. Spring - loaded pushers are used for this purpose. (Fig 6)

Nesting gauge :Nest gauges are used whenever

- secondary operation tools are used
- unit stock is fed into the tool.

The function of the nest gauge is to align the unit stock

Fig 6

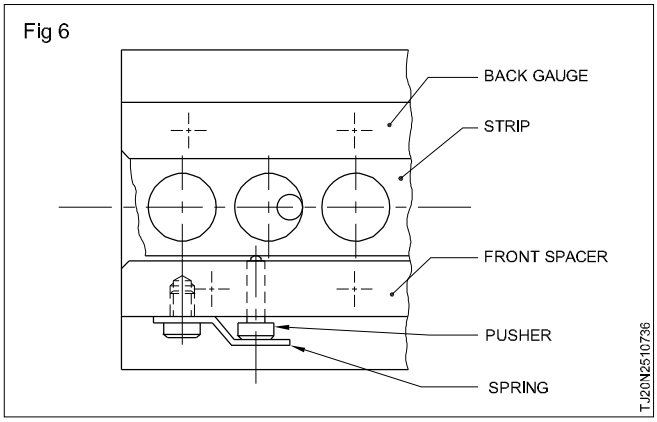

or the component for the secondary operation in correct relation to the punch and die. The nest gauges should meet the following three conditions to achieve the best result. (Fig 7)

Fig 7

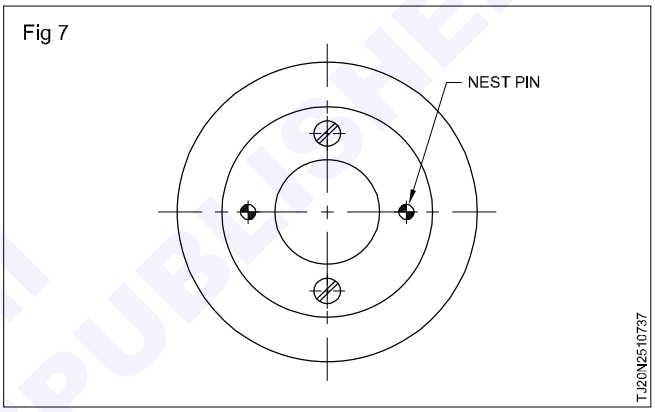

Accuracy: The fit between the pierce part and the gauge should be perfect and consistent throughout the life of the tool. It is not necessary for the nest to locate the entire contour of the piece part. Only sufficient number of locating points are needed.

But they should be strategically located in relation to the piece part contour. The number of locating pins depends upon the size and the shape of the piece part. The minimum requirements are:

- three points for circular and triangular shapes. (Fig 8)

Fig 8

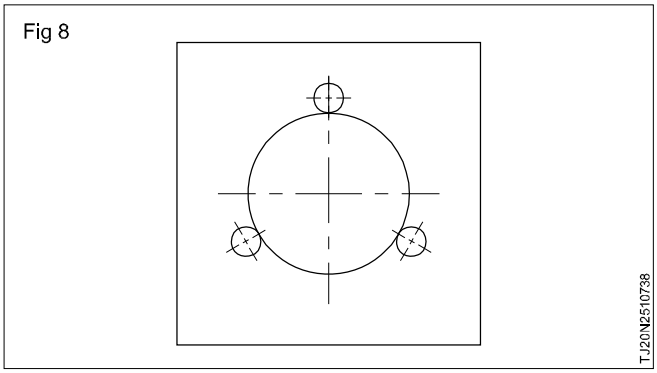

- four points for other shapes. (Fig 9)

Easy and quick unloading: Nest gauges should facilitate fast and easy loading and unloading of components. To achieve this good visibility and accessibility are required. Adequate lead angle should be provided around the

© CMI NOT TO BE REPUBLISHED

nesting profile for easy loading and unloading. For low production tools simple pick off slots are machined to pick the piece part out of the nest. Piece parts can be ejected out by means of lever operated ejectors. Thin piece parts can be expelled from the nest by means of compressed air jets.

Fig 9

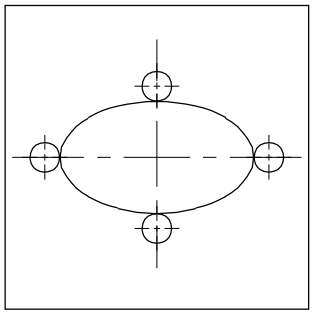

TJ20N2510739

Fool proofing: The possibility of the piece part being loaded in incorrect manner by the operator should be prevented by the nest. This can be easily achieved by fool - proof pins. (Fig 10)

Fig 10

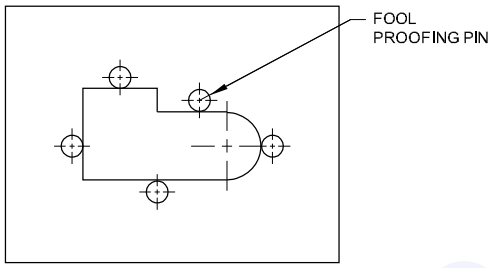

TJ20N2510739A

Types of nest gauges

Pin type nest gauges: This is the simplest form of a nest gauge. It consists of plain or headed cylindrical pins. They are arranged in such a way as to provide enough number of locating points for the piece part. The pins are hardened and ground. The total clearance between the pins and the piece parts should be at least 0.03 mm. The upper end of the pins must be bevelled for easy loading and unloading. The opposing tool member should have relief holes to receive these pins. In inverted tools the nest pins are fitted into the travelling stripper. The relief holes are drilled in the die block (Fig 11).

If these holes are to be provided near the die opening the die will be weakened. In such cases, the pins are spring loaded. They are pushed below the face of the stripper upon contact with the die block. Retracting nest pins is less accurate and should be used only if unavoidable. (Fig 12)

Plate type nest gauges: This type of a nest gauge is a plate into which an opening is machined to receive the piece part. The opening need not fit the entire contour of the piece part. The plate nest can be of split construction for easiness in machining and hardening. They are screwed and dowelled into position. All gauging elements should be made out of tool steels and hardened and tempered. (Fig 13)

Fig 11

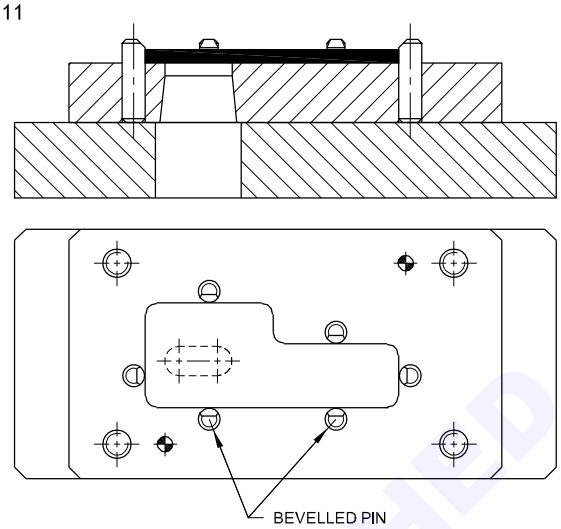

TJ20N2510738

Fig 12

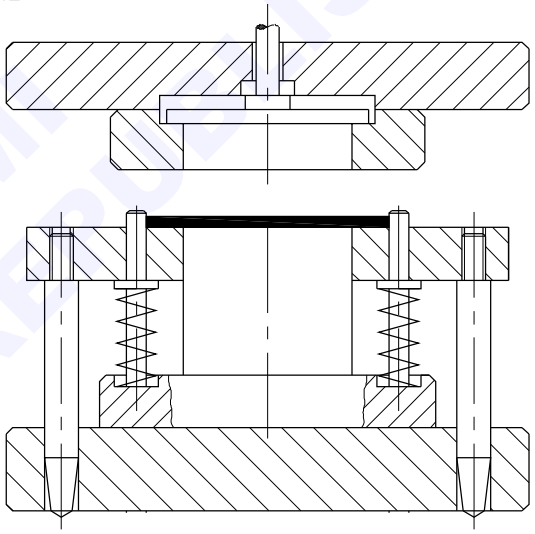

TJ20N2510737C

Fig 13

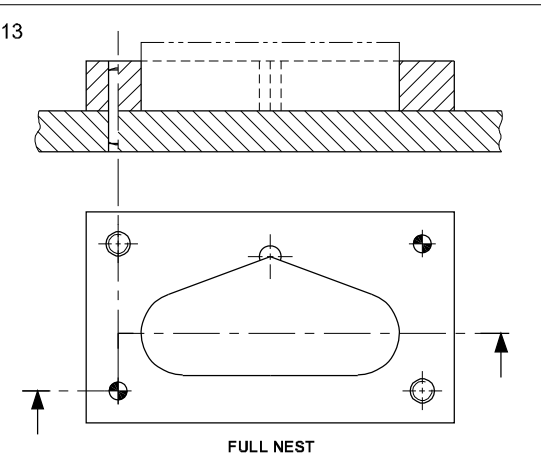

TJ20N2510737D

© NIMI NOT TO BE REPUBLISHED

Pilots

Objectives: At the end of this lesson you shall be able to

- **state the purpose of piloting**
- **state common nose contours of pilots**
- **specify the size of pilots**
- **select a suitable diameter for the pilot opening in the die**
- **state different types of pilots**
- **differentiate between direct piloting and indirect piloting**
- **determine the application of direct and indirect piloting depending on the situation.**

Purpose of Pilots

The pilot positions the stock strip in relation with the die opening. This is termed as registering. The strip is normally overfed more than the pitch length. When the press is tripped the pilot comes down and engages the prepierced hole. The strip is dragged back into the registry position. When mechanical feeding is employed the strip is underfed. The pilot pulls the strip into registry position. (Figs 1 and 2)

Fig 1

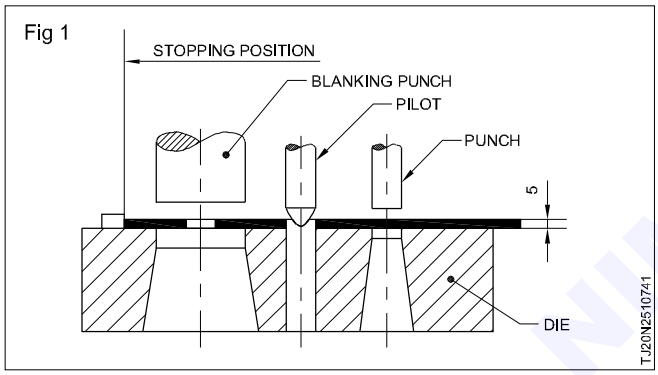

Fig 2

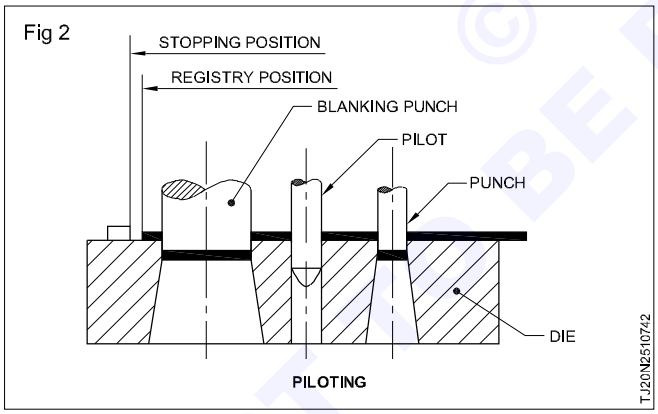

Pilot size: Diameter of pilot for average work, diameter of hole to be piloted – 0.05 to 0.1mm.

For close work, diameter of hole to be piloted – 0.03 to 0.05 mm.

For accurate work, diameter of hole to be piloted – 0.01 to 0.02mm.

Thick stock materials and materials like aluminium and copper need often a bigger tolerance between the pilot and pierced hole.

Pilot length: Registering of the strip should be done before the punches come and engage the strip. Therefore the pilot should extend beyond the punch face equal to one sheet thickness. (Fig 3)

Fig 3

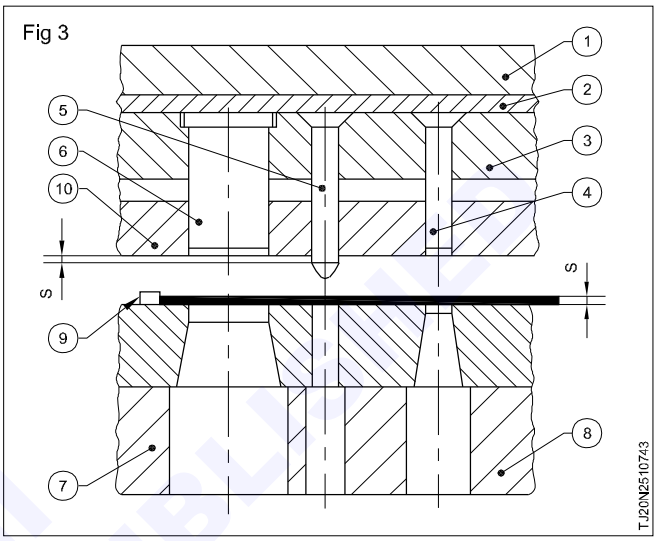

1 Top plate
2 Back plate
3 Punch holder
4 Piercing punch
5 Pilot
6 Blanking punch
7 Die plate
8 Bottom plate
9 Stopper
10 Stripper.

Pilot opening in the die: If the pilot opening in the die is larger instead of registering, the material will be drawn into the opening. Diameter of the opening = diameter of pilot + double clearance.

Pilot opening in the bottom plate: Through hole is provided in the bottom plate for the following reasons:

- Slugs produced due to misfeeding can be cleared - if by chance the strip jumps the stopper the pierced hole will be out of alignment with the pilot. The pilot will hit the strip and punch out a deformed slug.
- Accumulated burrs dislodged from the pierced hole cleared. - During piercing operation burr is formed on the pierced hole. The pilots, while entering the prepierced hole, will dislodge the burr. (Figs 4 & 5)

© NIMI NOT TO BE REPUBLISHED

Fig 4

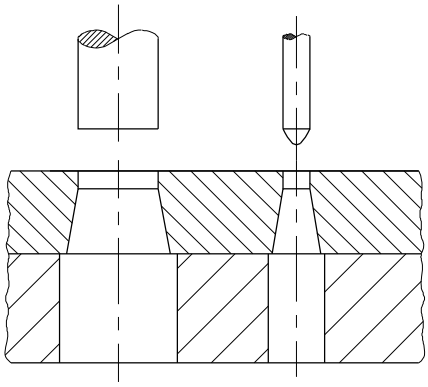

T.J20N2510744

Fig 5

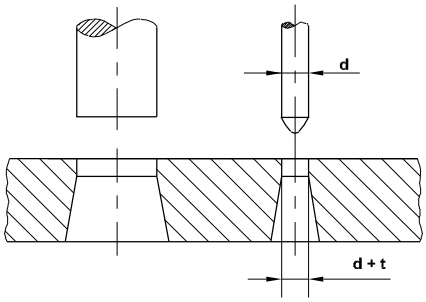

T.J20N2510745

Pilot nose profile

Bullet nose: The most common pilot nose profile is bullet nose. The bullet shape is formed by radius 'R' which is equal to piloting diameter. For piloting in holes less than 6mm in diameter the length of radius 'R' can be increased to reduce the lateral force due to piloting. Bullet nose is strong, simple to make and smooth in action. (Fig 6)

Fig 6

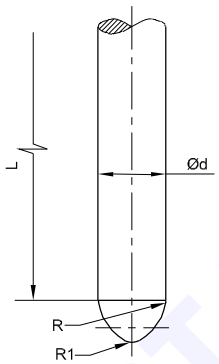

BULLET NOSE

T.J20N2510746

45° Conical stub nose: shorter nose profile. Used for piloting thick meterials. (Fig 7)

30° Conical stub nose: This is a compromise between bullet nose pilot and 45° stub nose pilot . (Fig 9)

15° Conical stub nose: Used for small pilots and for soft thin materials. (Fig 8)

Pilot in punches: Pilots mounted in punches are called punch pilot.

The pilot extends beyond the punch face by a distance of atleast one sheet thickness (minimum 1.5 mm). These pilots are used for slow production and secondary operation tools. (Figs 10 & 11)

Types of pilots: Pilots are held in the punch holder. In special cases the following pilots are used.

Retractable pilots: Misfeeding may occur due to the overshooting of stock strip over the stoppers. In such cases pilots may buckle or break. To overcome this difficulty retractable pilots are used. They are spring loaded pilots; they will be pushed up when they come into contact with unpierced area during operation. (Fig 12)

Fig 7

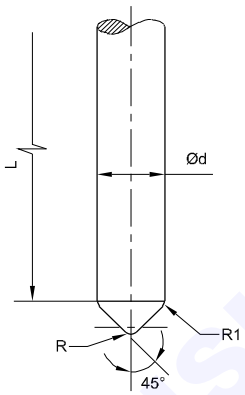

45° CONICAL STUB NOSE

T.J20N2510747

Fig 8

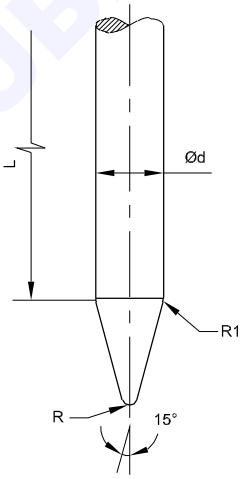

15° CONICAL STUB NOSE

T.J20N2510748

Fig 9

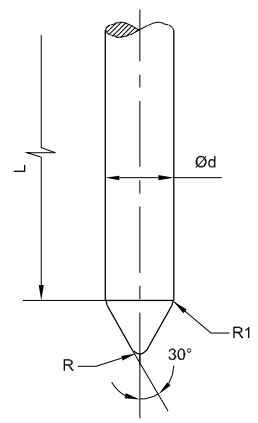

30°CONICAL STUB NOSE

T.J20N2510749

© NIMI NOT TO BE REPUBLISHED

Fig 10

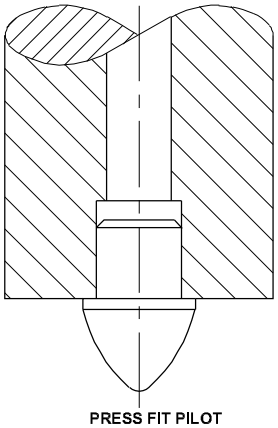

PRESS FIT PILOT

TJ20N251074A

Fig 11

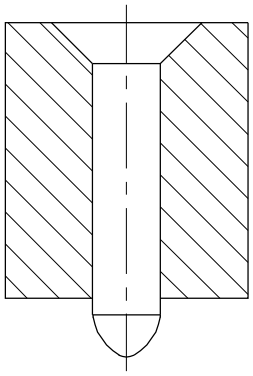

PEENED PILOT

TJ20N251074B

Fig 12

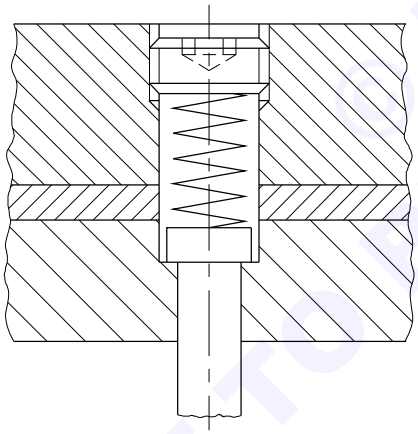

RETRACTABLE PILOT

TJ20N251074C

Removable type pilots: Pilots break often due to misfeeding of stock strip. Changing of broken pilots consume considerable time and leads to loss in production. Removable type pilots are used to overcome this difficulty. The pilots are inserted through the top plate into the punch holder and fastened with screw. (Fig 13)

Methods of piloting

Direct piloting: Piloting in holes pierced in that area of the strip which will become the blank is called direct piloting. (Fig 14)

Indirect piloting: Indirect piloting consists of piercing holes in the scrap area of the strip and locating by these holes at subsequent operations.

Fig 13

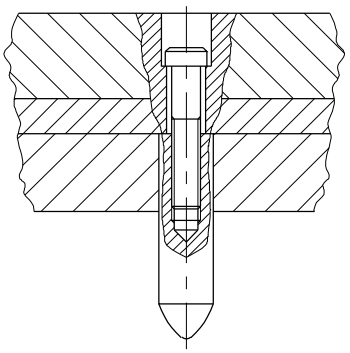

REMOVABLE PILOT

TJ20N251074D

Fig 14

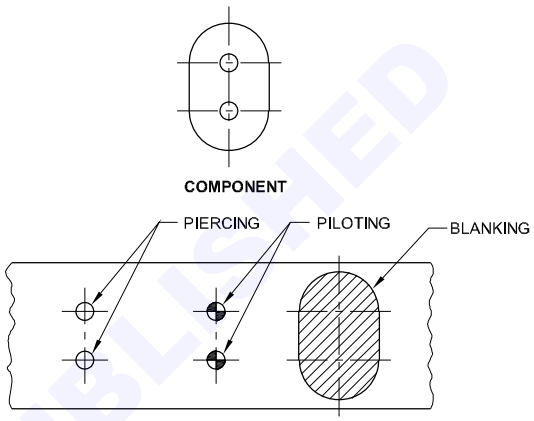

TJ20N251074E

Direct piloting is the preferred method, but certain blank conditions require indirect piloting. (Fig 15)

Indirect piloting is preferred under the following conditions;

Fig 15

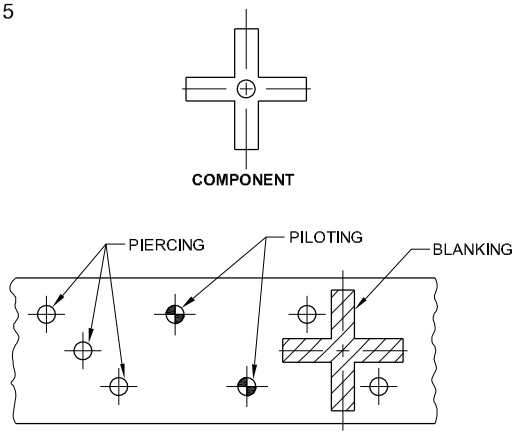

TJ20N251074F

Close tolerance on holes: Pilots can enlarge holes while pulling a heavy strip in position. (Fig 16)

Holes too small: Fragile pilots can break or deflect during operation. (Fig 17)

Holes too close to the edge of the blank: Distortion can occur on the blank because of enlargement of holes. (Fig 18)

Holes in weak areas: Piloting in projecting tabs is impractical because they may deflect before the strip is pulled in position. (Fig 19)

NOT TO BE REPUBLISHED © NIMI

Fig 16

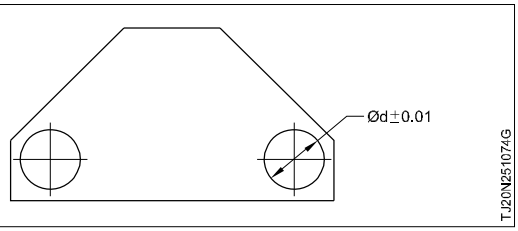

TJ20N251074G

Fig 17

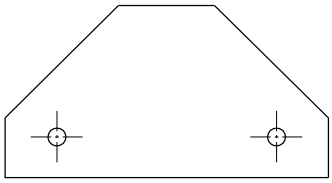

TJ20N251074H

Fig 18

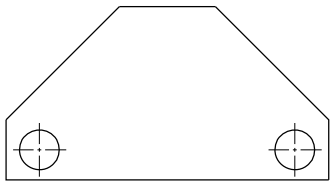

TJ20N251074I

Holes spaced too closely: Piloting in closely spaced holes does not provide an accurate relationship between holes and relative edges of the blank. (Fig 20)

Fig 19

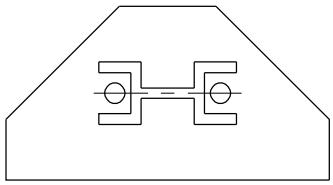

TJ20N251074J

Fig 20

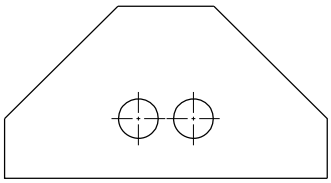

TJ20N251074K

Blanks without holes: Piloting has done in the scrap area whenever the blank does not contain round holes. (Fig 21)

Fig 21

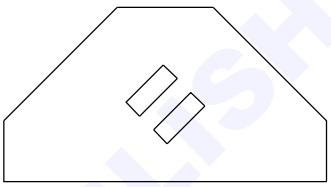

TJ20N251074L

Side Cutters

Objectives: At the end of this lesson you shall be able to
- **state the function of side cutter in a press tool**
- **state the advantages of side cutters.**

Side cutters: Side cutter is an accurate method of stopping arrangement. It is mainly used for thinner strips where it is difficult to accommodate other types of stoppers.

The side cutter is installed in the first position of a progressive tool. This eliminates extra stops and simplifies both construction and operation of the tool. The side cutter is located along the front edge of the stock strip. Two side cutters on each side are used when the number of stages are more or if the pitch is less.

Side cutter is like a trimming punch which trims the side of the stock material. A shoulder is formed on the strip.

The shoulder is stopped against a hardened insert provided in the spacer. The width of the side cutter is equal to the pitch. (Figs 1 & 2).

The allowance for side cutting depends on the type and thickness of the stock material. The size of the side cutter will be more than the pitch by 0.05 to 0.1mm when pilots are used in the tool. The pilots will register the strip at the correct location. but in tools without pilots the side cutter is made equal to the pitch.

Unbalanced forces act on side cutters during the cutting operation. Therefore the side cutters are provided with heels.

Fig 1

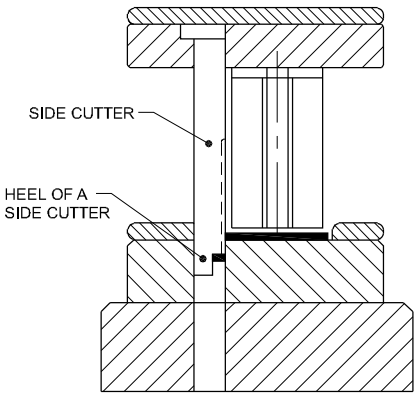

TJ20N2510751

Thorns (small projections) occur on the side of the strips due to side cutter wear out. The undercuts provided on side cutter eliminates the difficulties of feeding due to formation of thorns. The slugs may go up with the punch. Slug pushers are used to avoid this. (Fig 3)

Advantages of using side cutters

1 It is a safer method than stop pins.

2 Avoids deformation of thinner strips by stop pins.

3 Preferred for small punchings where it could be difficult to employ other types of stops.

© NIMI NOT TO BE REPUBLISHED

Fig 2

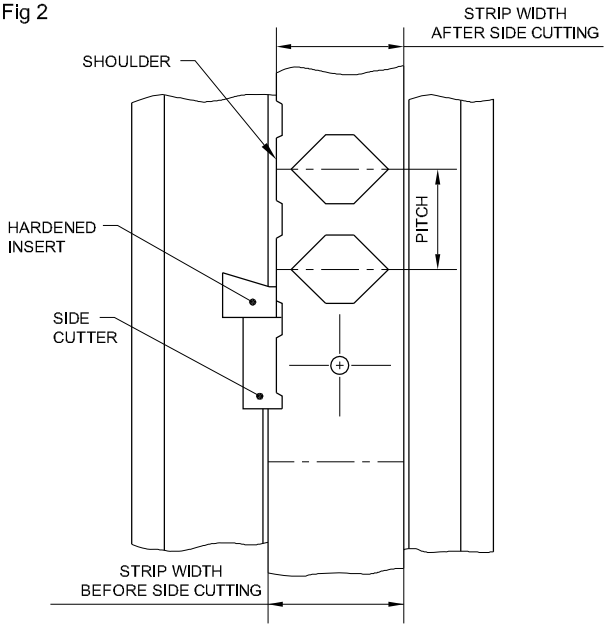

Fig 3

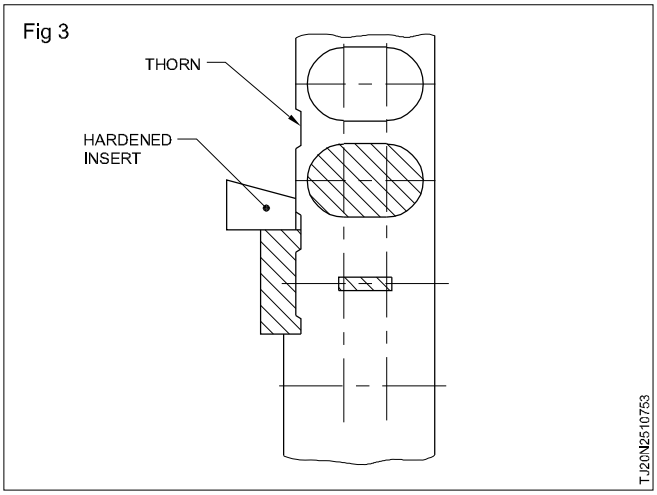

4 It is economical and avoids complications in tools where number of stages are more.

5 Pilots can be avoided for punching components with moderate accuracy.

Shank

Objectives: At the end of this lesson you shall be able to

- **state the function of a shank in a press tool**
- **describe the different types of shanks employed in a press tool**
- **state the importance of locating the shank in the correct position**
- **differentiate between the shank position of a press tool by calculation method and by graphical method.**

Shank is an element of a press tool. The shank acts as a connecting link between the press tool and press.

The diameter of the shank should fit into the bore in the press ram. The shank diameter is standardised in relation with the size of the press ram bore.

The size of the bore varies from press to press depending on the capacity of the press. (Fig 1) the shank can be fixed to the tool top plate by

Fig 1

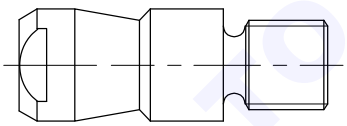

- screw thread (Fig 2)

Fig 2

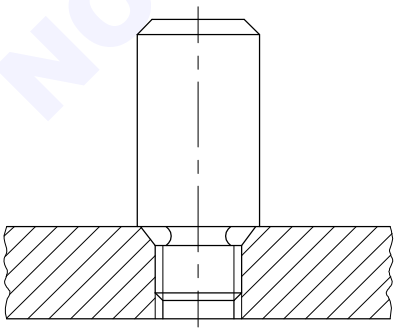

- rivetting (Fig 3)

Fig 3

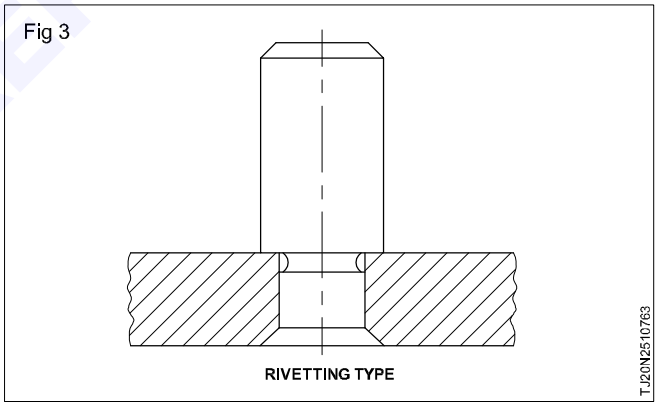

- making as interal part of the top plate. (Fig 4)

Fig 4

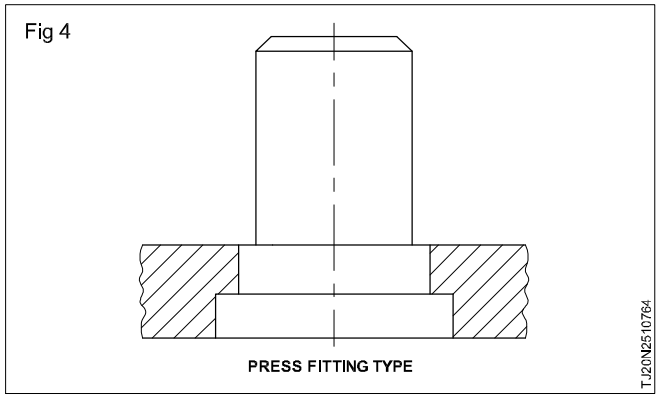

- the integral threaded types are used commonly.

© NOT TO BE REPUBLISHED

The shank has two flats milled on diameter at top, to facilitate its fastening to the tool by using a spanner. (Fig 5)

Fig 5

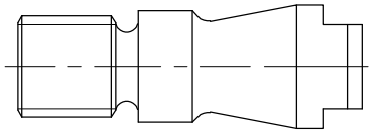

T.J20N2510765

Self aligning type shank: The shank permits quick loading and unloading of the press tool on a press. The design of the shank is different from the other types. A TEE coupling mechanism is made in two sections. The half mounted on the tool is the male member. The half fixed to the press ram is the female member. They are case hardened. (Fig 6)

Fig 6

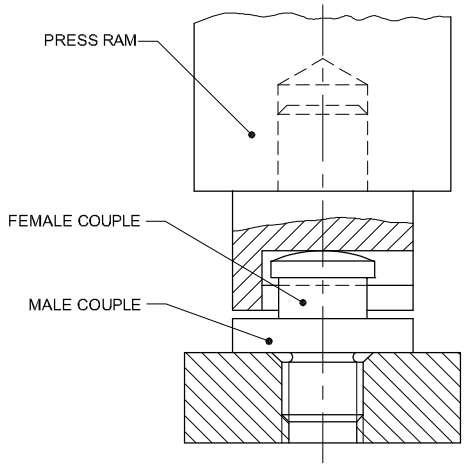

T.J20N2510766

Location of shank on a tool: The balancing of cutting punches is very important for press tool operation.

Unbalanced force distribution on the tool top will cause undue wear on the punch , die and also on the pillars.

The resultant sorce of all the cutting forces acting on different punches should pass through the shank center.

The resultan force of all the partial cutting forces can be found by applying the following two methods.

- by calculation
- by graphical method (polygon of forces).

Center point of shank location can be found by calculating the x and y coordinates for the point. the formula to be used for this calculation is,

$$X = \frac{(L_1X_1)+(L_2X_2)+(L_3X_3)+.....}{L_1+L_2+L_3+.....}$$

$$Y = \frac{(L_1Y_1)+(L_2Y_2)+(L_3Y_3)+.....}{L_1+L_2+L_3+.....}$$

Example

The die layout for manufacturing the component is given here with reference axis. To find the center-point of shank locatiion, proceed by taking X and Y coordinates for each of the section as given below (in the table).

Reference edges for X and Y axis are to be taken from the sides of die plate or from the side of the punch holder.

This is because the postion of punches and die are available on these two plates and center axis of punch and die will be same as these two plates. The data pitch 32 is provided to fix “Y” values of each section in the die from the reference edge. (Figs 7 & 8)

Fig 7

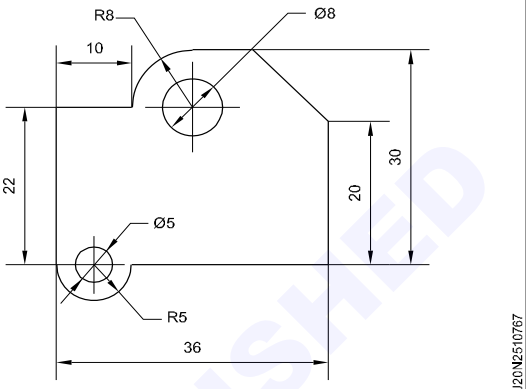

T.J20N2510767

Fig 8

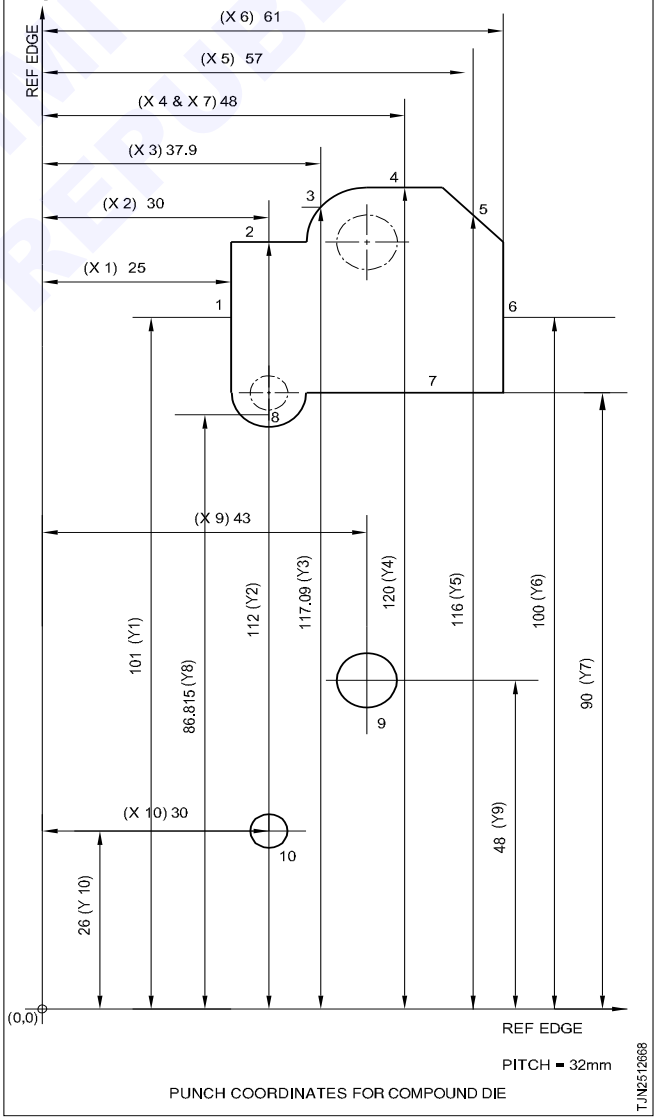

TJN2512668

© NIMI NOT TO BE REPUBLISHED

X-AXIS			Y-AXIS		
Sl.No.	L x X PRODUCT		Sl.No.	L x Y PRODUCT	
1	22 x 25	= 550	1	22 x 101	= 2222
2	10 x 30	= 300	2	10 x 112	= 1120
3	12.56 x 37.9	= 476.02	3	12.56 x 117.09	= 1470.65
4	10 x 48	= 480	4	10 x 120	= 1200
5	11.31 x 57	= 644.67	5	11.31 x 116	= 1131.96
6	20 x 61	= 1220	6	20 x 100	= 2000
7	26 x 48	= 1248	7	26 x 90	= 2340
8	15.71 x 30	= 471.3	8	15.71 x 86.815	= 1363.86
9	25.136 x 43	= 1080.84	9	25,136 x 48	= 1206.52
10	15.71 x 30	= 471.3	10	15.71 x 26	= 408.46

I = 168.42 I = 168.42

Ix = 6942.3 Iy = 14463.52

x = Ix/ I = 6942.3/168.42 y = Iy/ I = 14463.45/168.42

x = 41.22 y = 85.88

The intersecting point of x and y coordinate (41.22 & 85.88 respectively) is the centre position of the shank to be fitted.

Polygon system: (Refer the accompanying force diagram) (Figs 9 & 10) the centre point of shank location can be determined by graphical method which is also known as polygon system. To construct the polygon force diagram the sequential steps given here have to be followed.

1 Draw the cutting forces to a scale in a straight line on x and y axis at right angle.

2 Draw the arrow heads at the ending points of each force as shown in Fig 9.

3 Draw two more lines at 45° angle from starting and finishing points of the total length of the forces so as to form an isosceles triangle and call the intersecting point as “pole centre”.

Fig 9

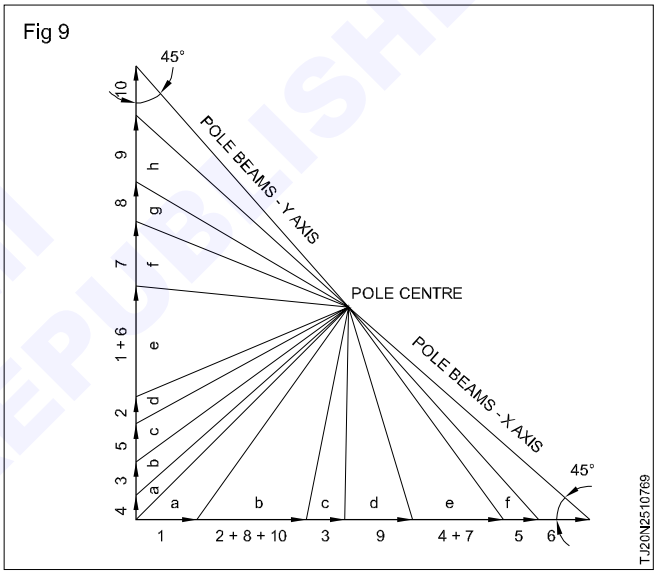

4 Draw the lines from each arrow head to join the pole point and call them as pole beams.

5 Draw the forces to scale at given distance.

6 Draw the lines parallel to the pole beams, cutting force line graphically as shown in Fig.10.

7 The line of action of the resultant goes through that point where those two pole beams intersect.

© NIMI NOT TO BE REPUBLISHED

Fig 10

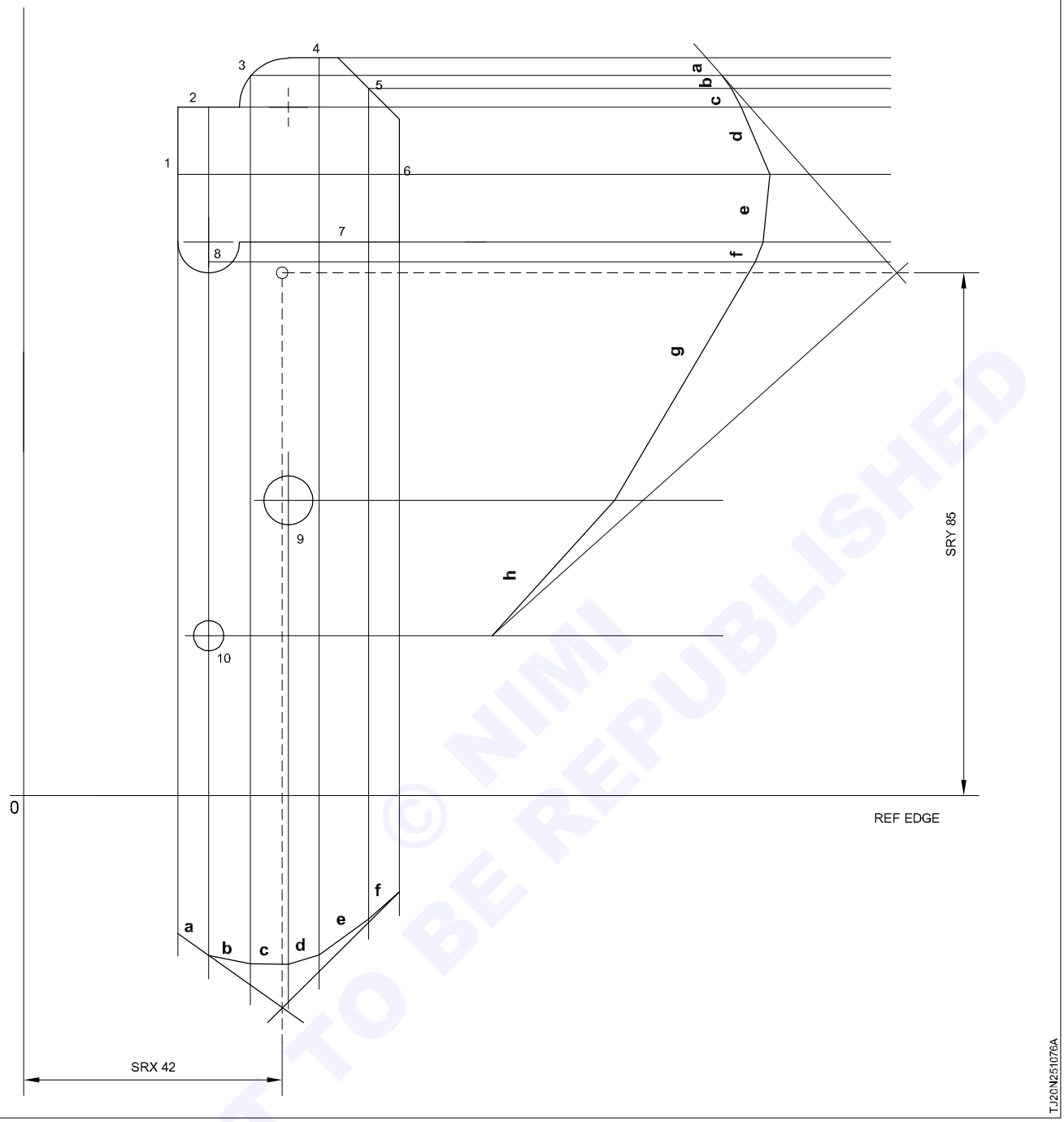

© NIMI NOT TO BE REPUBLISHED

Die Sets

Objectives: At the end of this lesson you shall be able to

- **identify the parts of a die set**
- **state the advantages of using standard die sets**
- **describe types of die sets**
- **identify types of guide pillars**
- **identify types of guide bushes.**

Die sets: The die set consists of a bottom plate and a top plate together with guide pillars and bushes. The guide pillars and bushes align the top and bottom plates. (Fig 1)

The advantages of die sets are:

- accuracy of set up
- improved piece-part quality
- increased tool life
- minimum set up time
- easy maintenance

Fig 1

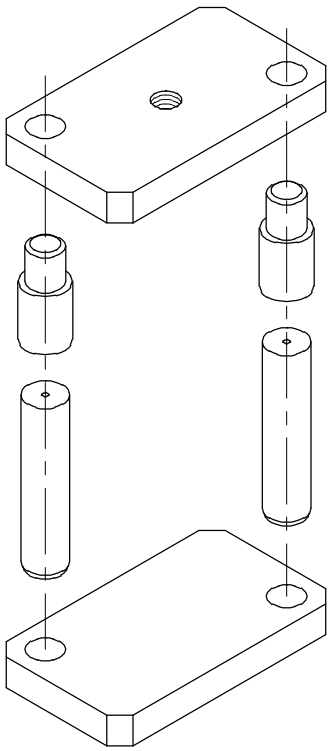

EXPLODED VIEW OF DIE SET

T.J20N25110771

- accurate alignment of punch and die
- easiness of storing

Die sets can be classified as

- precision
- commercial.

The difference between them are the accuracy of the fits between the bushes and the pillars.

Precision die sets are used for cutting operation tools.

Commercial die sets are used for operations like bending, forming and other non cutting operations.

Die set materials: The top and bottom tool holders shall be made of Mild steel of IS:226-1975 “specification of structural steel” (Standard quality) or cast iron grade FG 260 of IS:210 1978 “specification of gray castings” or Cast steel of grade 23-45 of IS:1030 1974 “specification for carbon steel castings” for general engineering purposes”.

Die set components

- top plate
- guide bushes
- guide pillars
- bottom plate.

Top plate: The upper working member of the die set is called the top plate. The punch holder is clamped to the top plate.

Bottom plate: The bottom plate is lower working member of the die set. It is provided with clamping flanges. The flanges have provision for fastening the die holder to the bolster plate of the press. Usually the bottom plate is made thicker than the top plate. This is to compensate for the weakening effect of slug and blank holes.

Guide pillar: Guide pillars are precision ground pins which are press fitted into accurately bored holes in the bottom plate.

Guide pillars are assembled into corresponding guide bushes to align punch and die components with a high degree of accuracy. (Fig 2)

- small diameter guide pillars are usually hardened and centreless ground.

Fig 2

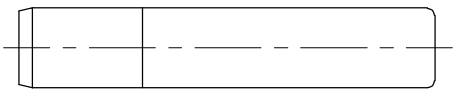

GUIDE PILLAR

T.J20N25110772

- large diameter pillars which are ground between centres after hardening or case hardening.

Removable guide pillars can be easily removed from the die set for resharpening the cutting element. They are employed for large dies and for dies having more than two pillars. (Fig 3)

Fig 3

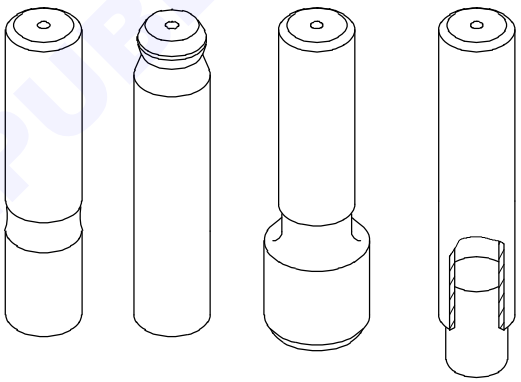

T.J20N25110773

Guide bushes: Guide bushes are precision ground bushes which are press fitted into accurately bored holes in the top plate. (Fig 4)

Fig 4

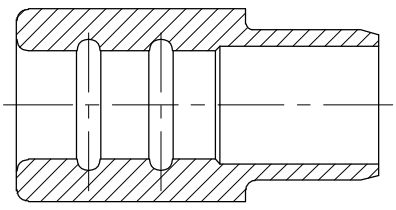

GUIDE BUSH

T.J20N25110774

Ball cage die set: Some die sets are provided with ball cages instead of guide bushes. (Fig 5) Guide pillars are pressed into the bottom plate. They are assembled into linear ball cages which in turn are guided in hardened sleeves resting inthe top plate.

Ball cage die sets are used where high rate of production is required and accurate alignment is necessary.

© NIMI NOT TO BE REPUBLISHED

Fig 5

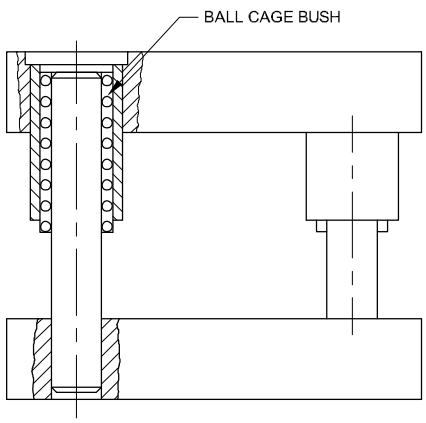

BALL CAGE BUSH

T.J20N2510775

Types of die set

- Standard die set
- Non-standrad die set

The specification for press working die sets are given in annexure.

Rear pillar die set

- used for bending tools.
- secondary operation tools. (Fig 6)

Fig 6

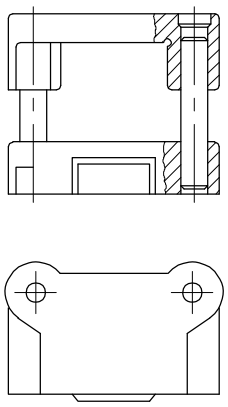

REAR PILLAR DIE SET

T.J20N2510776

Centre pillar die set

- used for round working area. (Fig 7)

Diagonal pillar die set

- used for progressive rectangular working area. (Fig 8)

Four pillar die set

- used for heavier press working operation. (Fig 9)

Non-standard die sets: These die sets are made for a particular design when standard die sets are not suitable or not available. These are usually made of mild steel with case hardened pillars and bushes.

Shut height: Shut height is the distance from the bottom plate to the top of the top plate when tool is in closed position. The height of the pillars must be less than the shut height in order to ensure that the press ram will not strike against the ends of the pillars. If possible, the pillars should be so designed to accommodate the reduction in the shut height which will be due to resharpening of die. (Fig 10)

Fig 7

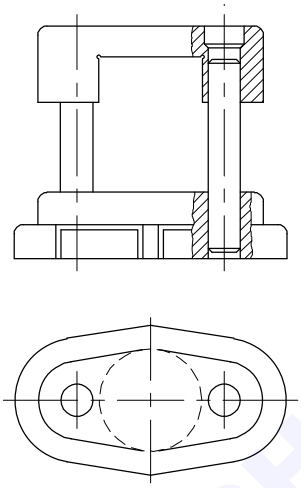

CENTRE PILLAR DIE SET

T.J20N2510777

Fig 8

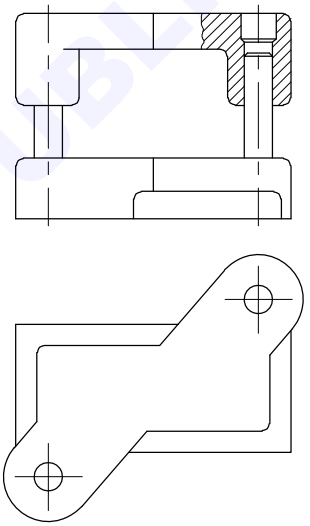

DIAGONAL PILLAR DIE SET

T.J20N2510778

Fig 9

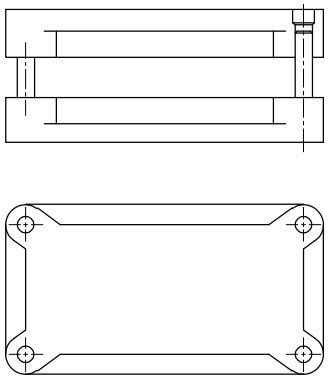

FOUR PILLAR DIE SET

T.J20N2510779

© NIMI NOT TO BE REPUBLISHED

Fig 10

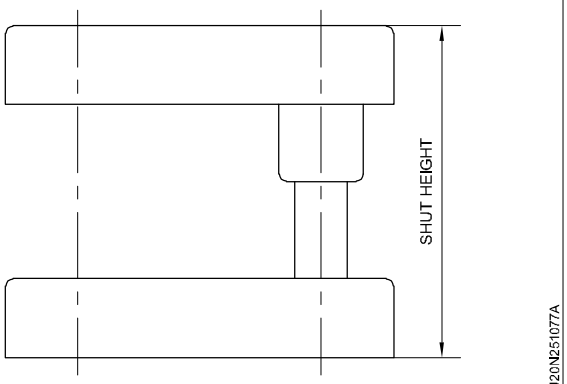

Presses

Objectives: At the end of this lesson you shall be able to

- **explain the terms connected with the presses**
- **describe the classification of presses**
- **explain the criteria for selecting a press.**
- **describe the different strip feeding arrangement**
- **describe die cushions.**

Presses

Parts of press

Capacity of a press (Fig 1): The rated capacity of press is the force which the slide will exert near the bottom of the stroke.

Fig 1

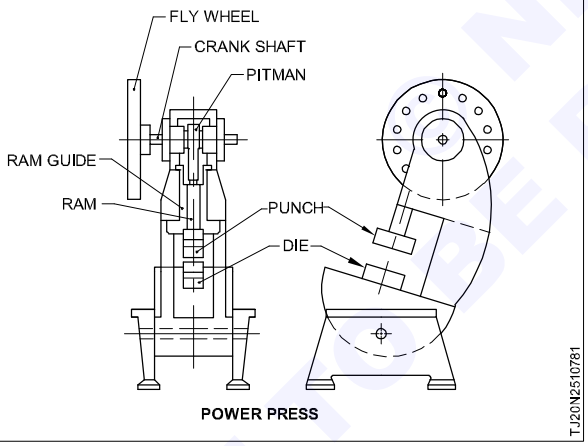

POWER PRESS

Press bed: Press bed serves as a table to which the bolster plate or the lower tool assembly is mounted.

Press slide: It is the reciprocating member of the press. It is guided in the press frame. The upper tool member is fastened to the slide. On a hydraulic press it is called the platen.

Plunger slide: The inner slide of a double action press is called plunger slide. In a double action press the punch is mounted on this slide.

Blank holder slide: The outer slide of a double action press is called blank holder slide.

Bolster plate: It is a plate secured to the press bed for locating and supporting the tool.

Pitman: Pitman is connecting rod which conveys power and motion from the main shaft to the press slide.

Clutch: It is a coupling used to connect or disconnect a driving machine member to or from a driven machine member. In a press it connects or disconnects the fly wheel to the main shaft.

Stroke: The stroke of a press is the reciprocating motion of the press slide. It is the distance between terminal points of motion.

Shut height: It is the distance from the top of the bed to the bottom of the slide with the stroke down and the adjustments up.

Die space: Die space is the area available for mounting tools in the press.

Classification of a presses: Presses are classified by one or a combination of some of the following characteristics:

1 Source of power

2 Number of slides

3 Methods of actuation of slides

4 Frame type

5 Bed type

6 Intended use.

Sources of power: The press is powered by one of the following sources;

a Manual

b Mechanical

c Hydraulic

d Pneumatic.

Manual: The presses are hand or foot operated through levers, screws, or gears. Fly presses, arbor presses and

NOT TO BE REPUBLISHED

toggle joint presses come under this category. (Fig 2)

Fig 2

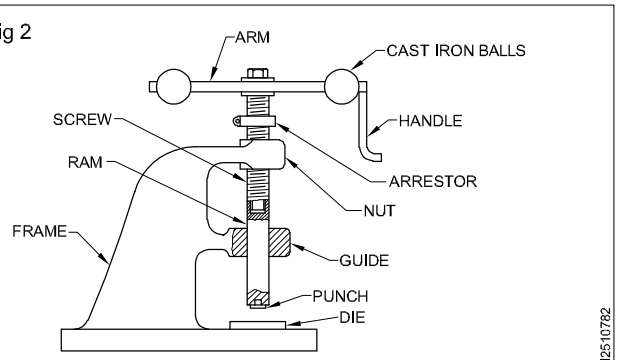

FLY PRESS

Mechanical: There are three major types of mechanical drives;

1 Non-geared or fly wheel type

2 Single reduction gear type

3 Multiple reduction gear type.

In all the above types flywheel stores energy. The source of power is an electric motor. (Fig 3)

Fig 3

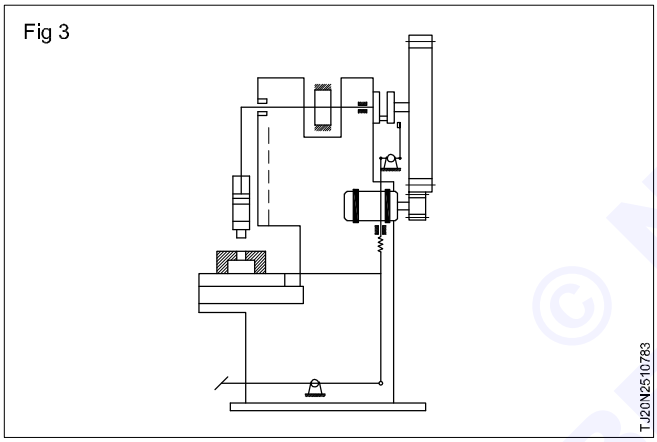

In the non geared type the energy of the fly wheel is transmitted to the main shaft of the press. This drive is applicable for light shearing operation (Fig 4). The single

Fig 4

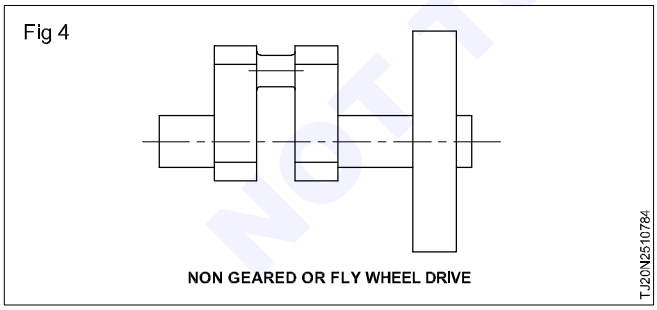

NON GEARED OR FLY WHEEL DRIVE

reduction gear drive transmits the energy of the fly wheel to the main shaft through one gear reduction. This drive is recommended for heavier shearing operations. (Fig 5)

The multiple gear drive transmits the energy of the fly wheel to the main shaft through two or more gear reductions. These reductions reduce the strokes per minute of the slide without reducing the speed of the fly wheel. (Figs 6 & 7)

Fig 5

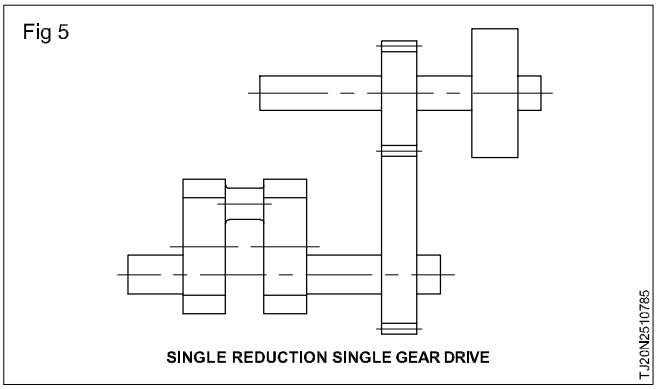

SINGLE REDUCTION SINGLE GEAR DRIVE

Fig 6

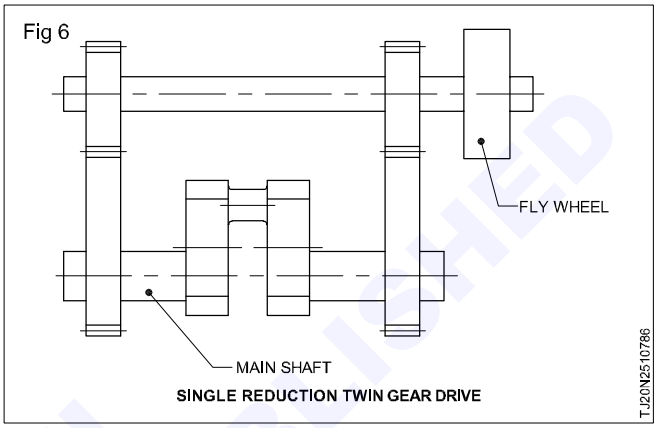

SINGLE REDUCTION TWIN GEAR DRIVE

Fig 7

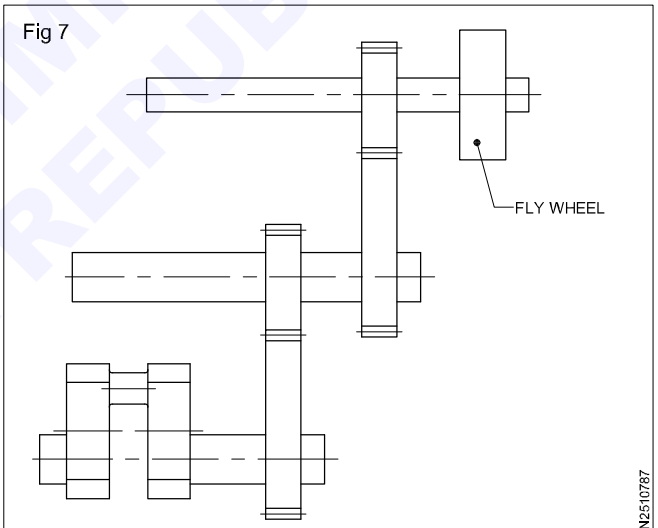

MULTIPLE REDUCTION GEAR DRIVE

Most presses have their drive mechanism on the top. The slide is pushed down to perform the operation. Some presses have their drive mechanism below their bed. They are called under drive presses. The drive mechanism is connected by links to pull the slide downwards. The mechanisms of the large underdrive presses are below the floor level. Thus they require minimum space above the floor level.

Hydraulic presses: A hydraulic cylinder provides the necessary force. Constant pressure and speed can be maintained throughout the entire stroke. Large presses use an accumulator to supply the energy. (Fig 8)

Pneumatic presses: Such presses are operated by pneumatic power. Pneumatic cylinders provide the necessary force.

© NIMI NOT TO BE REPUBLISHED

Fig 8

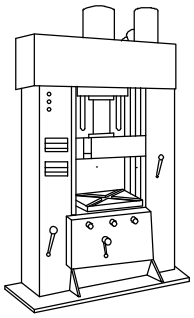

T.J20N25107788

Number of slides: Depending on the action upon the material the presses are classified as

1 single action
2 double action
3 tripple action

A single action press has only one slide. These presses are employed for operations such as blanking, piercing, bending, shallow drawing, forming etc.

A double action press has two slides arranged one within the other. The outer one serves as a blank holder. The inner slide carries the punch. A triple action press has three slides. Two slides are located above the press. One slide is within the bed. Such presses are used for complicated deep drawing operations.

Methods of actuation of slides: Crank shaft is most commonly used for actuating slides. For short strokes the throw is obtained by means of a full eccntric machined on the shaft. Crank shafts are used for longer strokes. Knuckle joints are also used to actuate the slides. They exert high tonnage only at the bottom of the stroke. A crank or an eccentric main shaft moves a point consisting of two levers. The levers oscillate to and from dead centre. This results in short powerful movement of the slide. Near the bottom of the stroke the travel is slow. (Fig 9)

Fig 9

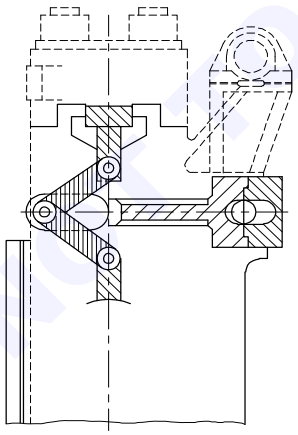

T.J20N25107789

In hydraulic and pneumatic presses the levers are actuated by hydraulic and pneumatic cylinders respectively.

Press frames: Press frames are classified into two

1 Gap frame or C frame

2 Straight side.

Gap frame: The housings of a gap frame press are cut back below the gibs to form the shape of letter C. This permits feeding of wide strips from the side. They have a solid back or an open back. The open back press (OBC) permits feeding from front to back. The finished part can be ejected through the back. The frames are in a fixed vertical position or in fixed inclined position. The frame can be inclined in some presses. The inclined position allows the parts to fall out by gravity.

Straight side: The slide of the press travels downward between two straight sides or housings. These presses are used for heavy work.

Press selection: Depending on the operational requirement the press is to be selected.

Cutting operations: Majority of cutting operations can be done on short stroke mechanical presses.

Bending: Straight side, gap frame or inclined single action presses can be used. A press with a stroke to suit the operation is to be selected. Hydraulic presses and press brakes are also suitable.

Forming: Forming operations upto75 to 100mm deep can be done on mechanical presses. Forming with die cushion is more accurate on mechanical presses. This is because the depth of the form is regulated by the throw of the crank.

Drawing: Drawing can be done in presses used for blanking operation if

1 The stroke is suitable

2 The press is equiped with die cushion.

But the operating speed should be slower.

Long stroke hydraulic presses are recommended for deep drawing, redrawing and ironing operations.

Strip feeding arrangement: For simple tools strip feeding is done manually. But when the production rate is high automatic feeding is employed.

Coil unwinding: The equipment consists of the reel and coil cradles. Power driven reels have mechanisms which switch off the power to drive when enough coil is unwound. Thus the reel always keeps the correct amount of stock unwound in the form of a loop.

The press feeding mechanism draws stock from this loop. Unpowered reels require external power source. They are equipped with an automatic or manual brake to stop the reel after sufficient stock has been unwound.

Strip straightening devies: The function of the device is to remove wrinkles and curvatures after uncoiling. This is an intermediate step between uncoiling and feeding into the press.

The mechanism consists of a series of rolls which bend the stock back and forth-past its elastic limit.

Strip feeding equipment: After uncoiling and straightening the stock is fed into the press. Different types of strip feeding equipment are available (Fig 10).

NOT TO BE REPUBLISHED

Fig 10

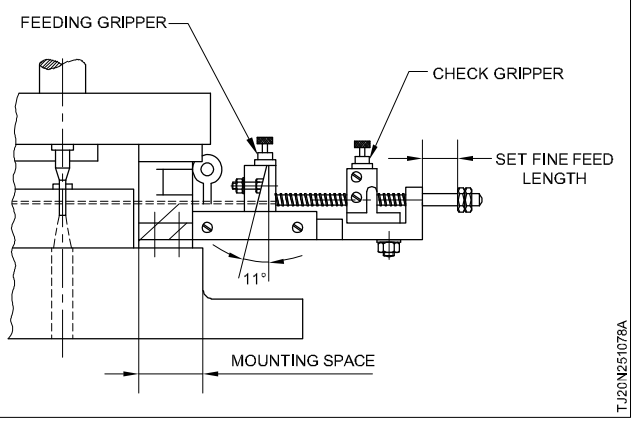

Their selection depends upon;

1 width of the strip

2 thickness of the strip

3 surface condition of the material

4 feeding interval

5 feeding length

6 feeding speed.

Basic feed types: There are two basic types of feed used with coil and strip stock:

1 Slide feed

2 Roll feed.

Mechanical slide feed: The mechanical slide feeds the strip positively through the required distance at each stroke. They have high accuracy. They are suitable for use with coil stock. When strip stock is used the strip ends should be fed into the tool manually. Stock guides should be used while feeding thin stocks. This prevents the strip from buckling. The slide feed is powered by the crank shaft of the press.

The rotation of the crank shaft is transmitted to the feed unit through an eccentric mounted on the crank shaft. (Fig 11)

Pneumatic feed unit: The pneumatic system grips the stock and takes it forward. Then it returns to its start position. (Fig 12)

Hitch feeds: They resemble mechanical slide feeds. The stock is pushed forward by a gripper plate. The feed is operated by a cam mounted on the punch holder.

Necessary force is generated by compressing springs. The springs are compressed by the cam as the punch holder descends.

The springs feed the stock into the die on the upstroke of the press. Hitch feed can be used to feed stock in any direction. They can be used on presses that do not have accessible crank shafts. (Figs 13 & 14)

Roll feeds: Roll feed consists of a pair one rolls, that can turn in only direction. Pressure is exerted by springs. Roll feeds are rotated by the motion of the press crank shaft. As they rotate they push the stock forward. Roll feeds are suitable for use with extremely thin materials. (Fig 15)

Fig 11

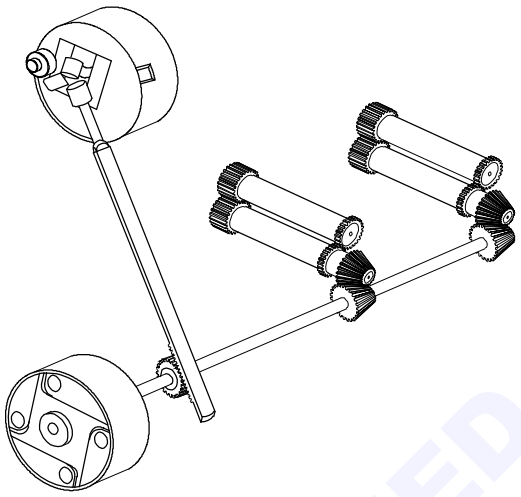

Fig 12

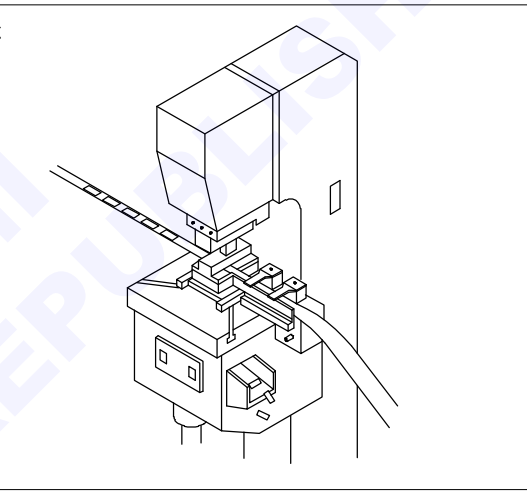

Fig 13

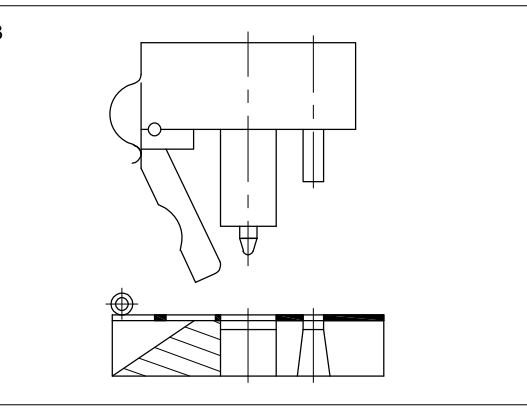

Fig 14

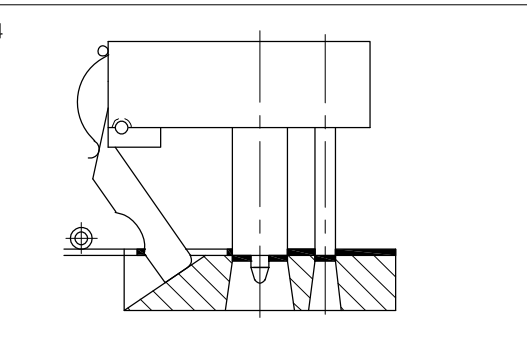

© NIMI NOT TO BE REPUBLISHED

Fig 15

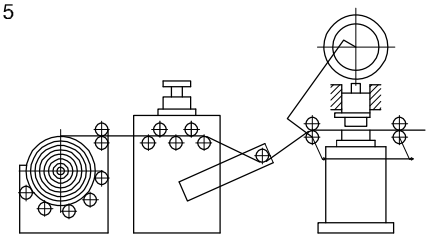

TJ20N251078F

Dial feeds: Dial feed is a rotating table. It can be,

1 Built into the press bed.

2 Fixed to the press bolster.

3 Separate piece.

Its function is to position one or more dies under a punch or punches mounted on the press slide. The dial feed can be powered by the press crank shaft or independently. It can be operated by

a Ratchet and pawl arrangement

b System of dogs and pins

c Barrel type indexing cam.

Die cushions: Drawing operation required the blank to be held in position by the blank holder. This force controls the metal flow during drawing. In a double action press the outer slide provides the blank holding force. Single action press lacks this feature. They require supplementary blank holding equipment. Tools are sometimes built with a blank holder using compression springs or PUR springs.

The pressure exerted by the compression springs increases as they are depressed. On shallow draws the pressure increase due to the compression of springs does not affect the quality of the work piece. On deep draws the increase in blank holder pressure will lead to the tighter gripping of blank. The draw force required to pull the blank into the die will exceed the strength of the material. This will lead to fracture of the drawn component. If the pressure increase is to be limited, very long compression springs are required.

To over come the problem, single action presses are provided with die cushions.

1 Pneumatic die cushions

2 Hydropneumatic die cushions.

Die cushions are also used in double action presses to help the bottom of the blank flat.

Pneumatic die cushions: When air pressure of less than 7×10^5 Pa is required to operate the die cushion pneumatic die cushions are preferred.

The die cushion can be connected to the pneumatic system of the stop. Two or more cushions may be placed on top of one another if a higher capacity cushion is required in a limited bed area. But enough vertical space should be available below the press bed. (Fig 16)

Fig 16

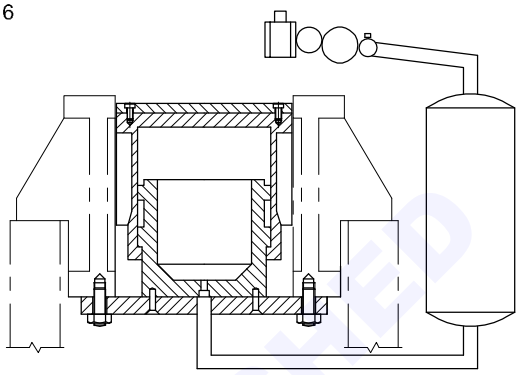

TJ20N251078G

Multiple pneumatic die cushions are preferred to hydraulic die cushions. This is because pneumatic cushions are faster in action.

Hydropneumatic die cushions: These die cushions are used where the capacity required is more than that can be obtained with 7×10^5 Pa air pressure on a pneumatic cushions.

The principle of air to oil pressure intensifier is used. They are slower acting than pnuematic die cushions. (Fig 17)

Fig 17

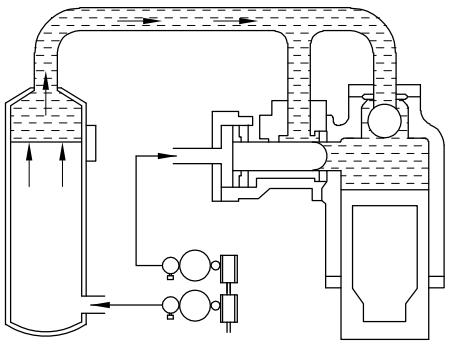

TJ20N251078H

Blanking Tool

Objectives: At the end of this lesson you shall be able to
- **identify the parts of a blanking tool**
- **state the functions of different elements of a blanking tool.**

Blanking tool

A blanking tool consists of: (Fig 1)

1 Top plate 2 Bottom plate 3 Punch 4 Die

5 Stripper 6 Punch holder

7 Thrust plate 8 Guide piller

NOT TO BE REPUBLISHED

9 Guide bush 10 Shank.

Top plate: This is the plate on which the punch holder is fixed. The top plate also holds the shank and the bushes.

Fig 1

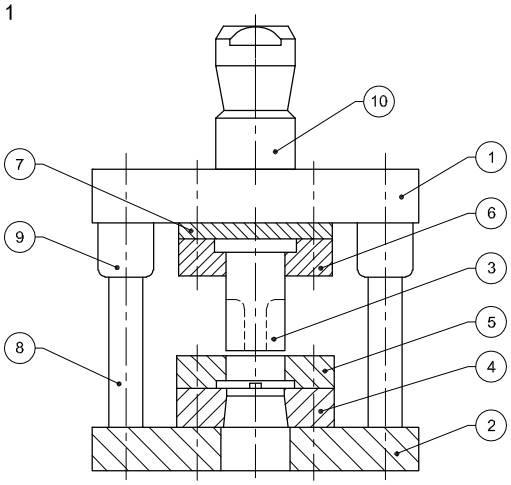

Top plate absorbs the shock resulting due to the cutting action.

Bottom plate: It is the base of tool. The die and pillars are fitted to this plate. The opening for the blank is made in this plate. The opening should be simple in profile and at the same time provide enough support to the die.

Punch and die: They are the cutting elements of a blanking tool. They are made of high carbon high chromium steel and are hardened and tempered to 58-62 HRC. (Fig 2)

Fig 2

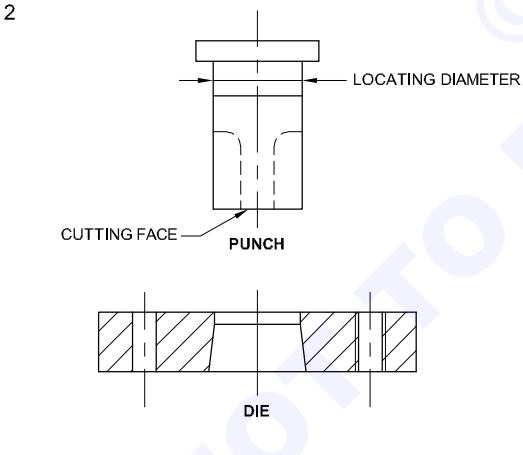

Stipper: Its main function is to strip the stock scarp off the punch and to guide the punch into the die. (Fig 3)

Fig 3

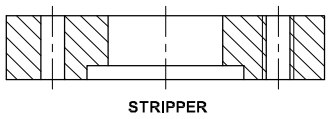

Punch holder: Punch is fitted to the punch holder with a light press fit (H7/m6). It is made of mild steel. (Fig 4)

Fig 4

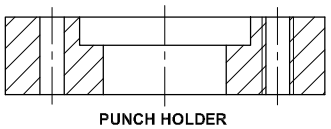

Thrust plate: While performing the cutting the punch will exert an upward thrust. So the punch should be backed by a hardened (45-50 HRC) plate to avoid digging on top plate. For this purpose the thrust plate is used. (Fig 5)

Fig 5

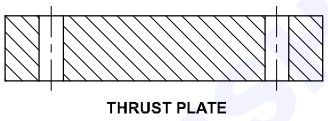

Guide pillars and bushes: They are used to achieve a well guided movement of the moving part with respect to the fixed part. (align the die and punch) (Figs 6 & 7)

Fig 6

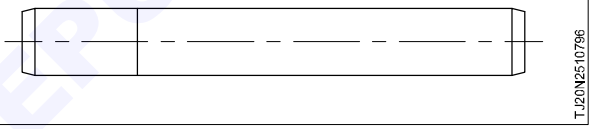

Fig 7

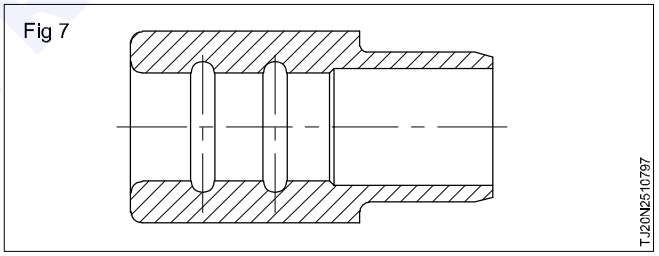

Shank: Shank connects the top half of the tool to the press ram. It is screwed on the top plate. (Fig 8)

Fig 8

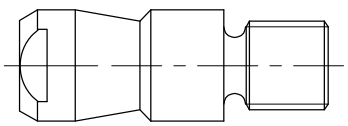

© NIMI NOT TO BE REPUBLISHED

Piercing Tool

Objectives: At the end of this lesson you shall be able to
- **identify the different elements of a piercing tool**
- **state the functions of different elements of a piercing tool.**

Piercing tool consists:

1 Top plate 2 Bottom plate 3 Punch 4 Die 5 Stripper 6 Punch holder

7 Thrust plate 8 Nest pins

9 Guide pillar 10 Guide bushes

11 Shank

Fig 1

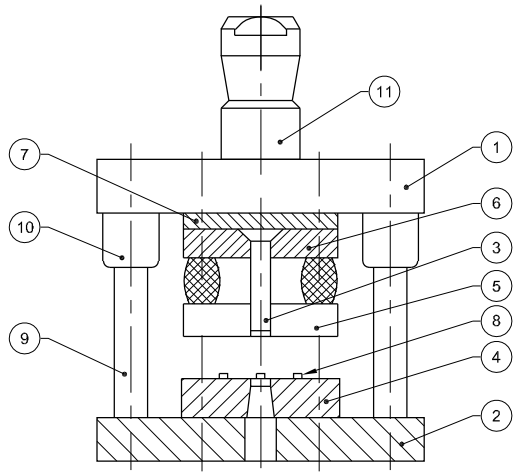

Top plate: This is the plate on which the punch holder is fixed. The shank and the guide bushes are fitted on this plate. The plate absorbs the shock resulting due to the cutting action.

Bottom plate: It is the base of tool. The die and pillars are fitted to this plate. The opening for the slugs made in this plate. Bottom plate also absorb the shock from the die plate during the cutting operation.

Punch and die: They are the cutting elements of a piercing tool. They are made of high carbon high chromium steel and are hardened and tempered to 58-62 HRC. (Fig 2)

Stripper: In a piercing tool travelling stripper is used to facilitate easy loading of unit stock. Stripper strips the component from punch after the piercing is done. It also holds the component flat during the operation. The punches are guided through the strippers. (Fig 3)

Fig 2

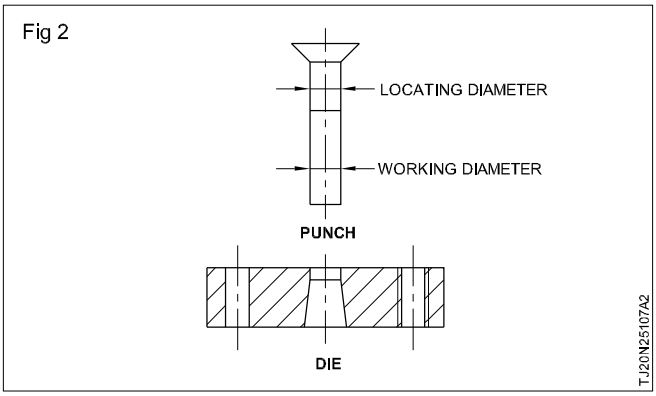

Fig 3

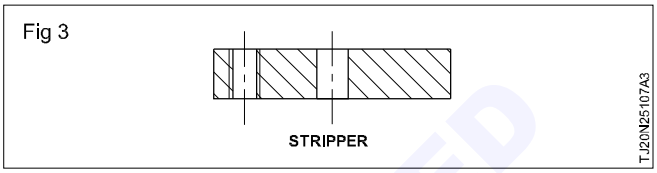

Punch holder: Punch is fitted to the punch holder with a light press fit (H7/m6). It is made of mild steel. (Fig 4)

Fig 4

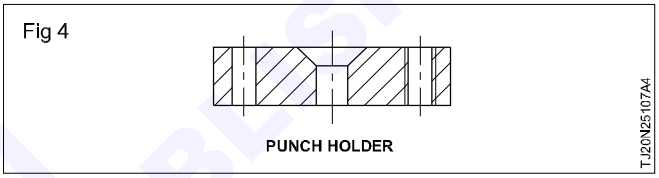

Thrust plate: While performing the cutting, the punch will exert an upward thrust. So the punch should be backed up by a hardened (45-50 HRC) plate to avoid the digging on the soft top plate. For this purpose the thrust plate is used. (Fig 5)

Nest pins: The blanked component is located by the Nest pins before piercing.

Fig 5

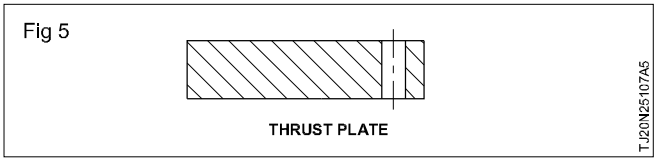

Ejectors and Shedders

Objectives: At the end of this lesson you shall be able to

- **differentiate between ejector and shedder**
- **state different types of shedders**
- **state the function of different types of shedders**
- **distinguish between direct knockouts and indirect knockouts.**

In conventional drop through type blanking tools, the punch forces the blank into the die. The blank will be retained within the die cavity till the subsequent blanks push it past the land. Then it falls down through the opening in the bottom plate and subsequently through the opening in the press bed.

Shedders and ejectors are used when it is not possible to remove the blanks in the conventional methods due to the following reasons:

- Size of the blank does not allow it to conveniently pass through the opening in the press bed.
- Contour of the blank is such that it tends to stick and get distorted during its travel through the die cavity.
- Opening in the press bed fitted with the die cushion which will interfere with the piece part disposal.
- Close tolerance specified for the flatness of the blank.
- Tools of inverted nature.

Ejectors: In the conventional position, die is the lower member of the tool. If the expulsion of the blank is achieved by forcing it upwards. The action is known as “ejection”. The element of the tool which ejects the blank is called

© NIMI NOT TO BE REPUBLISHED

an “ejector”. (Fig 1)

Fig 1

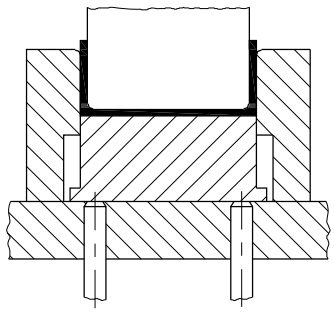

EJECTOR

TJ20N25107B1

Ejectors may be actuated by compression springs, rubber, pneumatic devices or hydraulic devices. Ejectors if used with spring strippers always return the blank into the strip due to the simultaneous stripping and ejecting action. In some progressive tools, the blanking station is provided with an ejector to return the blank into the strip to be carried forward to the next station for further operations, known as the cut and carry method. (Fig 2)

Fig 2

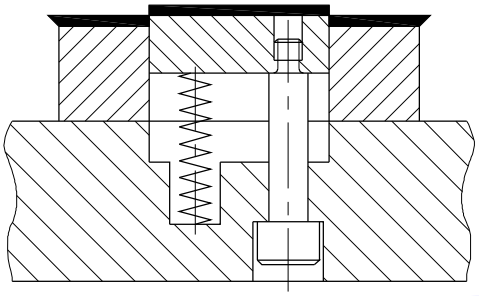

EJECTOR SPRING TYPE

TJ20N25107B2

Shedders: Another way to accomplish the expulsion of the blanks from the die cvity is by making use of the knockout mechanism on the press. For this purpose, the tool should be of the inverted design. In inverted tools,die becomes the upper member of the tool,being clamped to the press ram. The expulsion of the blanks is achieved by forcing them downwards. This action is generally known as “shedding” and the element of the tool which sheds the blank is known as the “shedder”.

Types of shedders: Shedders operated by the knockout mechanism on the press are called positive shedders. (Fig 3) Shedders backed up by compression springs, hard rubber or disc springs are called compression shedders.

Shedding pins: The stock material is usually coated with a rust preventive solution. It is obvious that any liquid or oil deposit left on the stock material will cause the blanks to stick to the face of the shedder. Spring loaded shedding pins are employed to overcome this problem. Even clean and dry stock material tends to adhere to the shedder face, due to the atmospheric pressure. Therefore, the installation of shedding pins is a necessity. Shedding pins will be more effective if applied to one side of shedder face rather than in the centre. All ejection and knockout elements are to be case hardened to 48-52 HRC depending on severity of operation. (Fig 4)

Fig 3

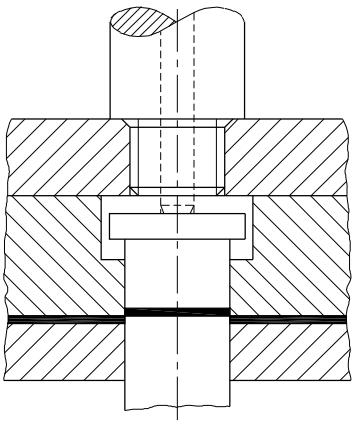

POSITIVE SHEDDERS

TJ20N25107B3

Fig 4

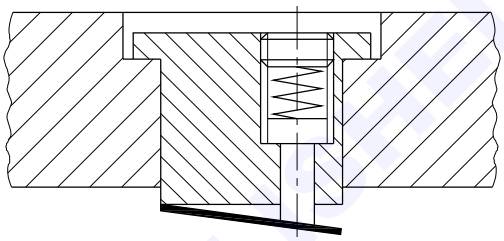

SHEDDING PINS

TJ20N25107B4

Knockouts: Positive knockouts are classified in two groups (Fig 5)- - direct knockouts- - indirect knockouts.

Fig 5

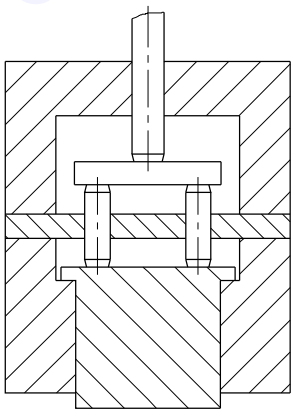

KNOCK OUTS

TJ20N25107B5

Direct knockouts: In a knockout system if the knockout rod is directly in contact with the shedder the system is known as direct knockout system. (Fig 6)

Indirect knockout: As the passage of the knockout rod is through the shank, any punch which comes in line with or near to the centre line of the shank will obstruct the knockout rod from coming in direct contact with the shedder. In such cases an indirect knockout system should be employed. In addition to the shedder and the knockout rod, it consists of a knockout plate and transfer pins as shown in the figure. The location and number of transfer pins depend on the size and shape of the blank. (Fig 7)

© NIMI NOT TO BE REPUBLISHED

Fig 6

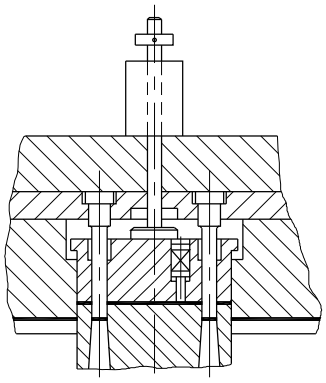

DIRECT KNOCK OUT

T.J20N25107B6

Fig 7

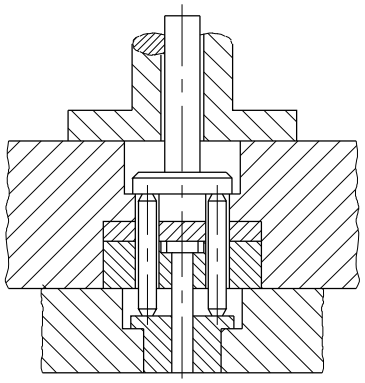

INDIRECT KNOCK OUT

T.J20N25107B7

Progressive Blanking and Piercing Tools

Objectives: At the end of this lesson you shall be able to

- **state the construction of a progressive tool**
- **state the function of the elements of a progressive tool**
- **draw strip layouts for producing components in a progressive tool.**

A simple blanking tool is designed only when the piece part has no internal details.

Different tool is to be designed if the piece part is to be produced by the combination of blanking and piercing operations. It can be done in the following way in the same tool.

The piercing is performed in the first station. Then the stock strip is advanced to another station where blanking is carried out. The relative position with the previously pierced hole is maintained during the blanking operation.

The tool is known as progressive tool because the processing progressive from station to station. (Fig 1)

Fig 1

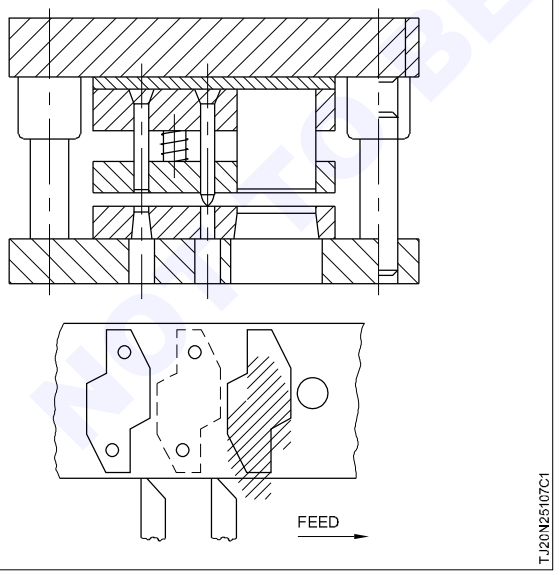

T.J20N25107C1

Before designing the tool the piece part drawing should be studied carefully. (Fig 2) This is to plan the operations to be carried out in different stations. Then the design of the strip is done. The design will be similar to the stock strip as it will appear after it has gone through all the stations till a finished part is removed from it. This layout is known as the “strip layout”. (Figs 3 & 4)

Fig 2

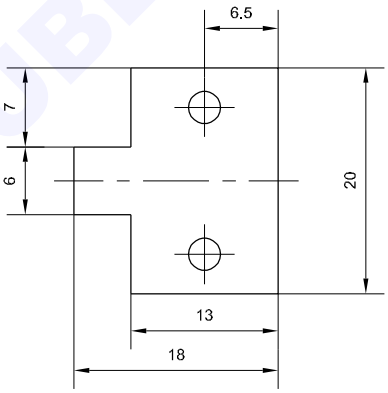

T.J20N25107C2

Fig 3

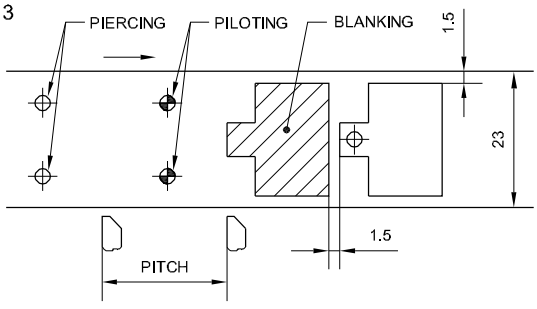

T.J20N25107C3

Fig 4

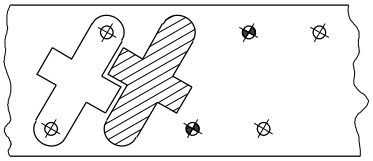

T.J20N25107C4

It must be fully dimensioned and should carry all informations necessary to start the design of the tool.

NOT TO BE REPUBLISHED © NIMI

The informations are,

1 Feed direction

2 The amount of pitch by which the strip should advance after each stroke of the press

3 Position of stoppers

4 Width of the strip

5 Scrap bridge dimensions.

Fifty to seventy per cent of the cost of stamping is on the material. The method employed in laying out the strip influences the economic success or failure of any pressing operation.

The strip layout should be such that the maximum area of the strip is utilised for the production of stamping.

In the tool shown the finished piece part is produced when the strip passes through three stations.

The strip is stopped at the first station by the auxiliary stopper (finger stopper). (Fig 5) During the first stroke of the press ram two holes are pierced by the piercing punch.

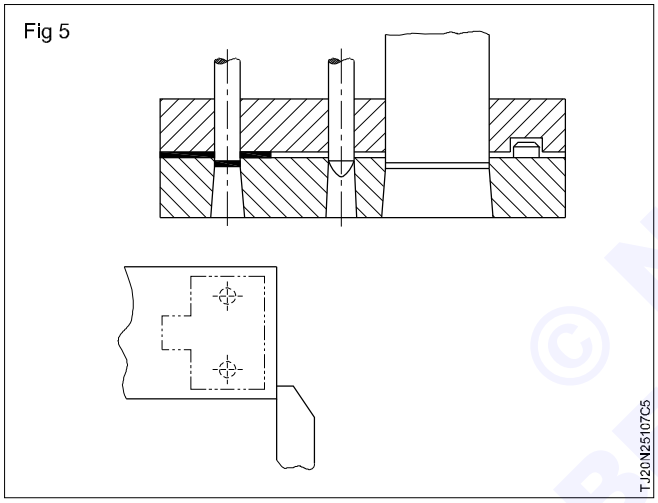

The strip is then advanced to the next station. To do this the first finger stopper withdrawn and the second finger stopper is engaged. Now the pierced hole come in line with the two pilot. The pilots are longer than the piercing punches. Their nose is conical shaped with a radius at the tip.

During the next stroke of the press ram the pilots enter into the previously pierced holes and locate the strip (second station). (Fig 6)

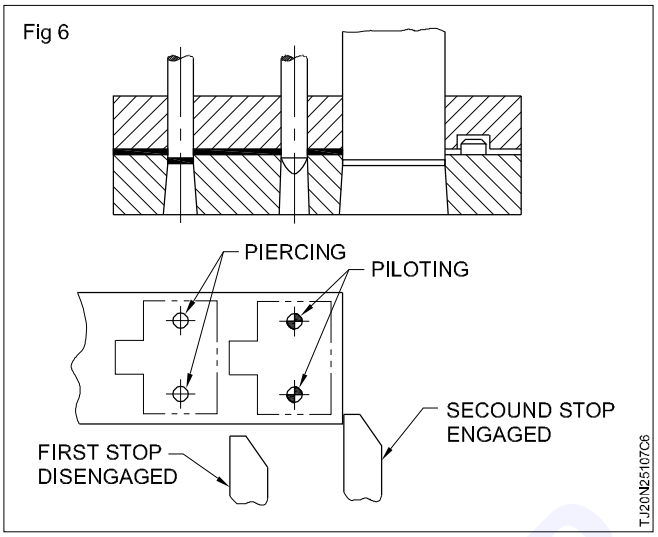

In the first station the piercing punches again pierce two holes in the strip.

Again the strip is advanced and brought to stop against final stop. (Fig 7)

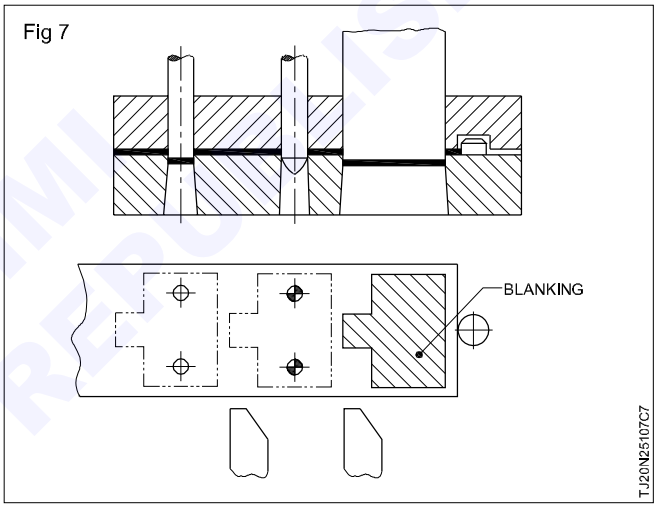

During the third stroke of the press ram the pilots enter the pre-pierced holes and locate the strip.

In the first station the two pierced punches produce two holes. In the third station the component is blanked and a piece part drawing. Once the first blank is removed from the strip, the strip is lifted to clear the fixed stopper. The strip is fed till it again stops against the newly formed edge of the opening in the strip created by the removal of the first blank. Only when a new strip is introduced into the tool the auxilary stoppers are used again.

© NIMI NOT TO BE REPUBLISHED

Basic Principle of Hydraulics & Pneumatic System

Objectives : At the end of this lesson you shall be able to
- **state the principle of hydraulics & pneumatics**
- **state the advantages of hydraulics & pneumatics**
- **state the disadvantages of hydraulics & pneumatics.**

Principles of hydraulic system

Introduction

Hydraulics is the transmission and control of forces and motion by fluids.

Hydraulic systems and equipment find widespread applications in engineering, e.g.

- machine tool engineering
- press operations
- process equipment
- vehicles
- aircrafts
- shipbuilding

Advantages

- Liquids are incompressible and capable of moving much higher loads providing much higher force.
- Highy responsive to pneumatics.
- Supply more power than pneumatics.
- Also provides lubrication and cooling.
- It is safe to use in chemical plates because they do not cause spark.
- Simple, safe and ecconomical compared to mechanical and elelctrical system.

Disadvantage

- Handlings hydraulic fluid is messy and it can be difficult totally get rid of leaks in hydraulic system.
- If fluid leaks in hot areas, it may catch fire.
- Too much exposure of handlings hydraulic fluid can lead to health issues.
- If hydrolic line burst, thay can cause serious injuries.

Pneumatics: Meduim: Gas (Air)

The study of foce and motion that are transferred by air is known as pneumatics. In pneumatic systems the power is transmitted by air. The force or pressure is attainted by transfer of air from one place to the other, which is known ad pneumatic power.

Advantages

- Air is avaliable everywhere.
- Return piping can be dispensed with.
- Air has a comparatively high flow speed in the piping and valves.
- Compressed air can be stored well in the containers.
- Pollution by leakage losses through untight points doesn't occur.
- Eassy assembly with plug fasterners and flexiable pipes is possible.

Disadvantages

- Air must be treated.
- Leakage losses are costly because of less continous energy.
- Above 6 bar, technical safety controls is necessary.
- Higher force is required for large cylinder diameters.

Theory of Plascal's Law (pascal's Principle)

It is the fundamental law in hydrostatics. It state that "a change in the pressure at any point of an enclosed incompressible fluid is conveyed undiminished to every part of the fluid and to the surface of its container". It is applied in hydraulic presses which are commonly used for forging, clinching, moulding, blanking, punching, deep drawing and metal forming operations.

© NIMI NOT TO BE REPUBLISHED

Brahma's Press

Objectives: At the end of this lesson you shall be able to
- **explain the principle of brahma's press**
- **explain the application of brahma's press.**

Brahma's press

Hydraulic press is a device using a hydraulic cylinder to generate a compressive force. It uses the hydraulic equivalent of a mechanical lever and is also known as a Brahma's press.

Principle

The hydraulic press depends on pascal's principle, the pressure through out a closed system is constant. One part of the system is a piston acting as a pump, with a modest mechanical force acting on a small cross

sectional area the other part is a piston with a larger area which generates a correspondingly large diameter force using a small diameter tube from the power pack (hydraulic pump). The hydraulic fluid is usually oil which is in compressable used for displacing the volume by a piston. Which is equal to ratio of area's of piston head. The other control elements like valves and safety devices for controlling flow and pressure to the required directions to suit the different applications.

Application of hydraulic press

Hydraulic press is used in metal forming operations like punching, blanking, drawing, moulding and forging. (Fig 1)

Pressure and flow

Pressure: It is the result of a force applied over a specific area, and that pressure is therefore measured by the formula:

Pressure (P) = Force (F) / Area (A)

Pressure is denoted by the letter 'P'. Its unit is N/m^2.

Flow: It is a part of fluid mechanics and deals with fluid dynamics. Fluids such as gases and liquids in motion are called fluid flow. It involces the motion of a fluid subjected to unbalanced forces. This motion continues as long as unblalanced forces are applied. A simple equation to represent this is:

Flow (f) = Quanity (Q) / Time (t)

Flow is denoted by the letter 'F'. Its unit is

Fig 1

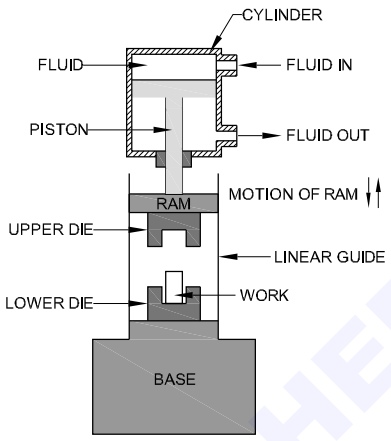

A HIGHER PRESSURE OF THE FLUID ABOVE THE PISTON THAN THE FLUID BELOW IT MOVES THE PISTON DOWNWARD

Types of valves used in hydraulic & pneumatic system

Objectives: At the end of this lesson you shall be able to
- **explain various direction control valve**
- **state the principle of operation flow control valve**
- **explain the types of valves used in pneumatics system.**

Hydraulic valves

Direction control valve are components which change, open or close flow path in hydraulics system. They are used to control the direction of motion of hydraulic actuator as well as responsible to stop the motion of actuator.

Direction control valves are classified as following according to the number of ports and positions:-

- 2/2- Way valve
- 3/2- Way valve
- 4/2-Way valve
- 4/3-Way valve

2/2 Way valve

The 2/2-way valve has a working port A, a supply port P and a leakage- oil port L. In the case of the valve shown here, of slide design, flow from P to A is closed in the normal position. (Fig 1)

Fig 1

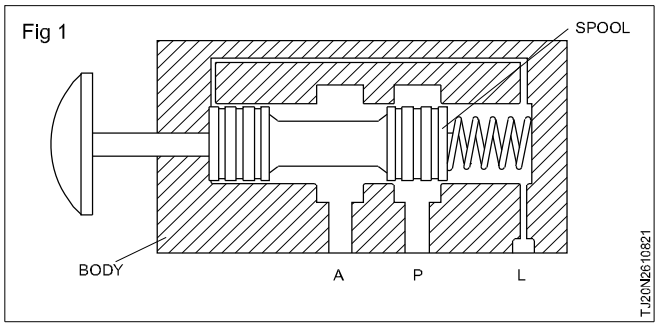

A relief line leading to the leakage - oil port is provided to prevent a build -up of pressure in the spring and piston chambers.

The 2/2-way valve is actuated and the passage from P to A is open. 2/2 -way valves are also available which are normally open from P to A. (Fig 2)

Fig 2

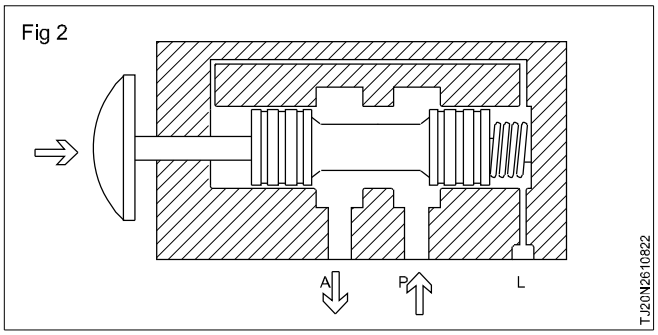

3/2-Way valve

The 3/2-way valve has working port A, a supply port P and a tank port T. Volumetric flow can be routed from the supply port to the working port or from the working port to the tank port. The third port in each case is closed. In the normal position shown, P is closed and flow released from A to T. (Fig 3)

The 3/2-Way valve is actuated; flow is released from P to A, the outlet T is closed. 3/2-Way valves which are normally open from P to A and T closed are also available. (Fig 4)

DO NOT TO BE REPUBLISHED

Fig 3

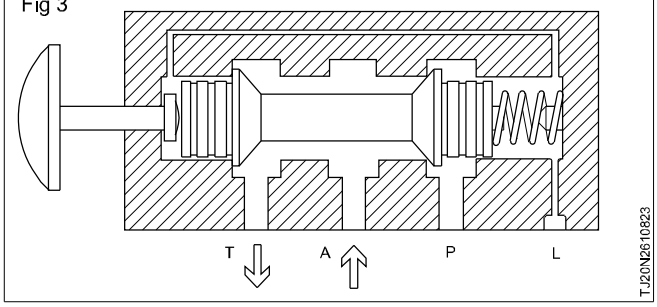

Fig 4

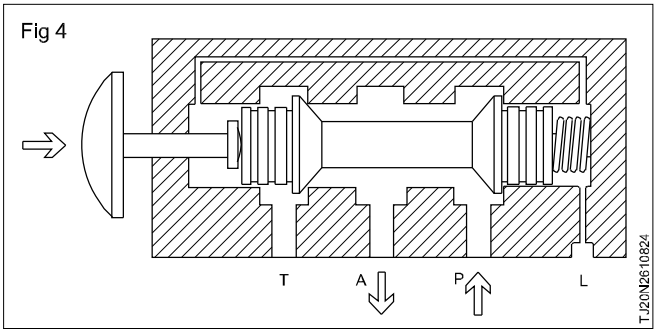

4/2 Way valve, two pistons

The 4/2-Way valve has two working ports A and B, a supply port P and a tank port T. The supply port is always connected to one of the working ports, while the second working port is routed to the tank. In the normal position, there is flow P to B and from A to T. (Fig 5)

Fig 5

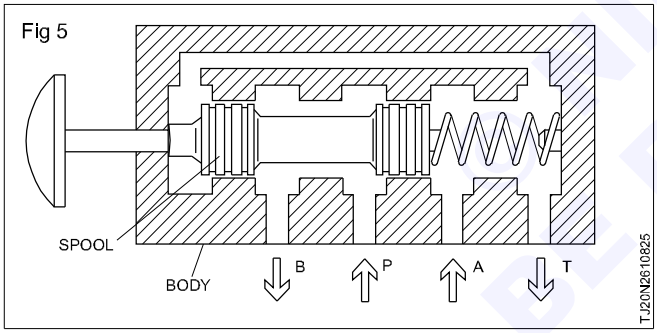

The 4/2-Way valve is actuated,and there is flow from P to A and from B to T. 4/2-way valves are also available which are normally open from P to A and from B to T. (Fig 6)

Fig 6

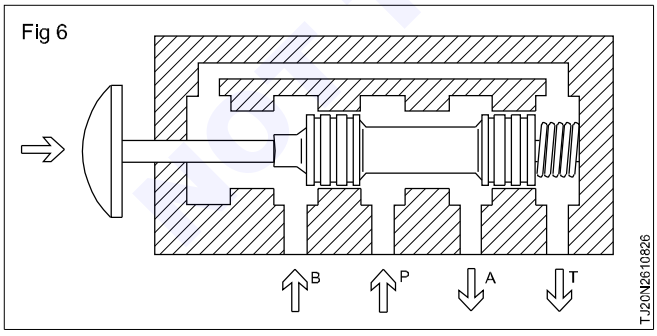

4/3- Way valve

From the logic point of view, 4/3-way valves are 4/2-way valves with an additional mid-position. There are various versions of this mid-position (in the mid-position in the example shown, the supply port P is directly connected to the tank T, see next illustration). In the switching position shown, there is flow from p to B and from A to T.

The 4/3-way valve is in its mid-position; there is flow from P to T, while A and B are closed. Since the output from the pump flows to the tank, this switching position is called pump bypass or also pump recirculation. In the case of pump bypass, the pump needs to operate only against the resistance of the valve, which has a favorable effect on the power balance. (Fig 7)

Fig 7

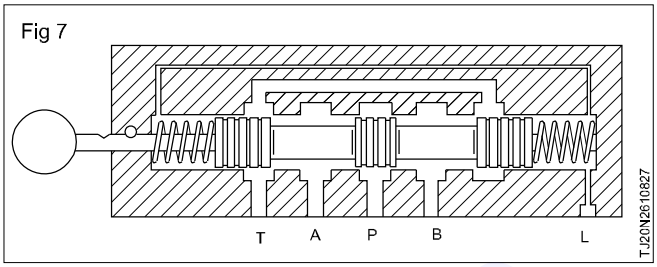

The valve is in its left-hand switching position; there is flow from P to A and from B to T. (Fig 8)

Fig 8

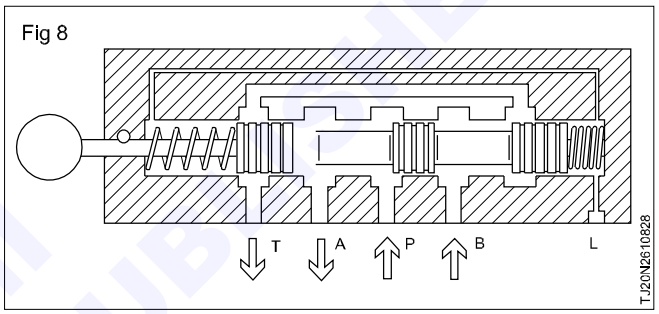

And the valve is in its right hand switching position there is flow from P to B and A to T. (Fig 9)

Fig 9

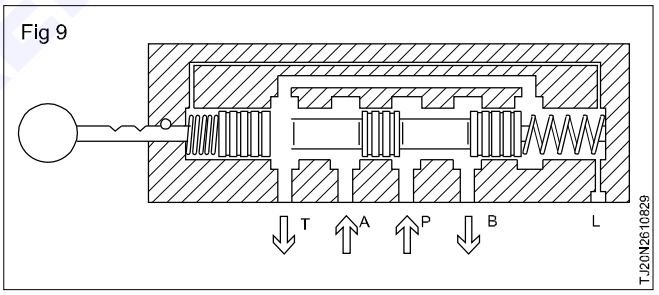

Non-return valve

Non-return valves block flow in one direction and allow free flow in the other. In the direction of flow shown, the sealing element is pressed against a seat by a spring and the hydraulic fluid. (Fig 10)

Fig 10

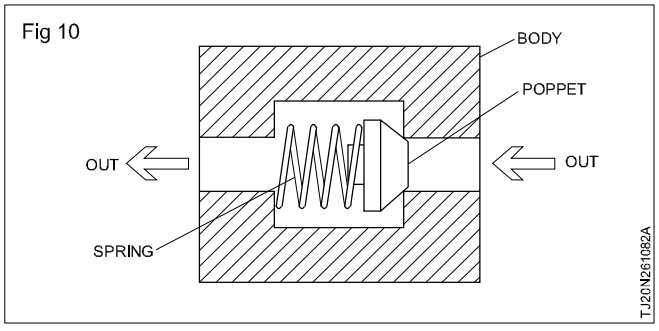

A spring loaded Non-return valve is shown in Fig 10. If oil pressure is more on left side of NRV, poppet of valve will not open as well as it will not allow the flow of oil.

NOT TO BE REPUBLISHED

And when oil pressure is more on right side of valve then poppet of valve will move for opening and oil will flow through the valve. (Fig 11)

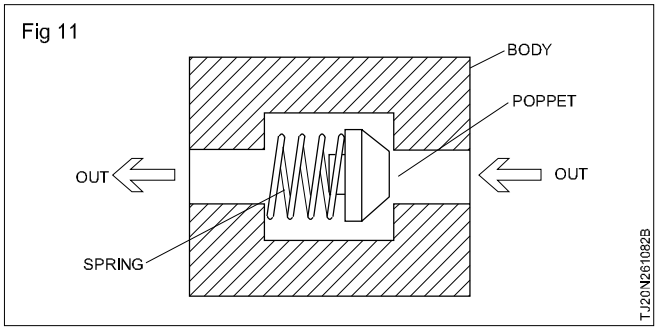

Flow Control Valve

The whole purpose of a flow control valve is to vary the speed of an actuating cylinder or motor. This is possible by controlling the flow rate of the fluid.

A flow control valve accomplish any one or more of the following control functions:

- To limit the maximum speed of the linear or rotary actuators

$$\left(\frac{\text{flow rate}}{\text{piston area}} = \text{piston speed}\right)$$

- To limit the maximum pressure available to branch circuits by limiting the flow. (power = flow rate x pressure)
- Proportionately divide or regulate the flow from pump to various branch circuits.

Principle of operation

As shown in Fig 12, the oil under pressure P1 enters the valve at A and flows through a restricted section, into the outlet B. While passing through the restricted passage, oil attains heat due to the friction. Thus the hydraulic energy in terms of pressure is converted into heat energy. The loss of energy is the result of drop in pressure.

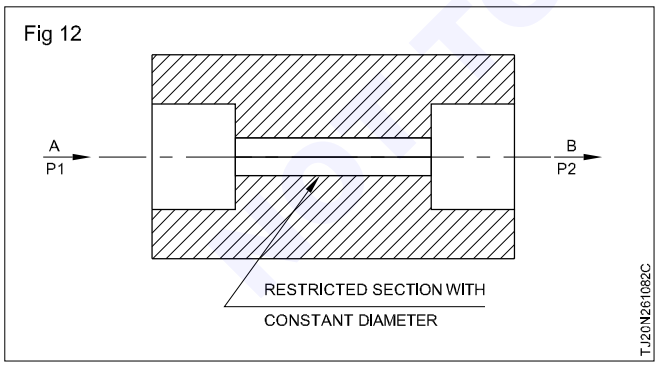

The difference between the two pressure is called pressure drop.

p = p1 - p2

The volume of flow (litres/min) is mainly dependent on the:

- Cross-section of restriction (Fig 13)

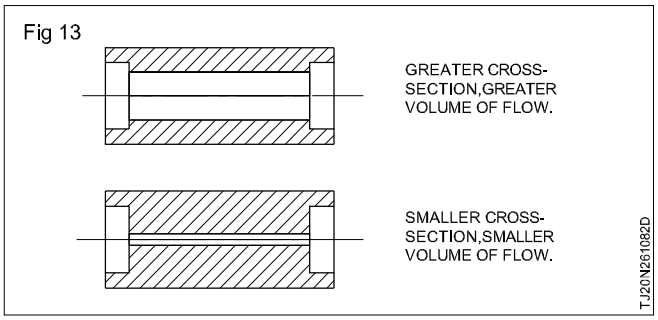

- Shape and length of orifice
- Pressure difference p
- Viscosity of the hydraulic oil.

Pneumatic Valves

Introduction: Pneumatic control systems consists of signal components, control components, and a working part. The signals and control component influence the operating sequence of the working elements and is termed as valves.

The valves are devices for controlling or regulating “start”, “stop”, and the direction of movement as well as pressure and rate of flow of the medium.

Valves are divided into 5 groups according to their function

1 Directional valves (Way valves)
2 Non-return valves
3 Pressure control valves
4 Flow control valves
5 Shut-off valves

Directional valves: Directional valves are devices which influence the path, taken by the air stream. It controls the start, stop and direction of the flow of air.

Representation of directional valves: Symbols are used for representing valves in circuit diagrams. These symbols specify only the function of the valve and do not indicate the design principle on which it is constructed.

Valve switching positions are represented as squares. (Fig 14a)

The number of adjacent squares shows how many switching positions the valve has. (Fig 14b)

The function and working principle is drawn inside the boxes(squares).

Lines indicates flow paths. Arrows show the direction of flow. (Fig 14c)

Shut-off positions are identified in the boxes by the lines drawn at right angles. (Fig 14d)

Flow path junctions are represented by a dot. (Fig 14e)

Eg.3/2 Way valve (Fig 15f) actuated by push button, reset by spring.

3 flow paths, 2 switching positions 4/2 Way valve (Fig 14g)

actuated by direct application of pressure, reset by spring.

© NIMI NOT TO BE REPUBLISHED

Fig 14

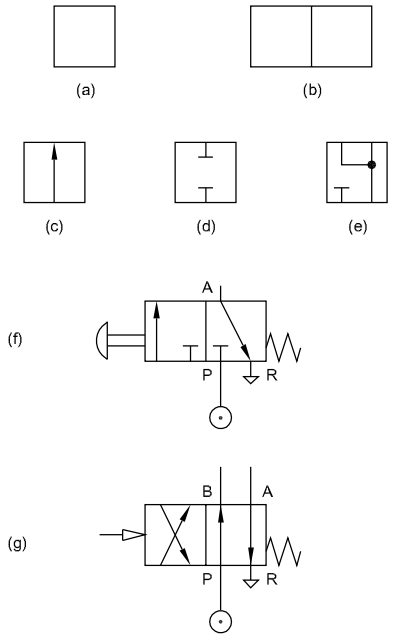

4 flow paths, 2 switching positions

AB Represents flow path

R Represents exhaust line

P Represents pressure line

Direction control valves (DC valves)

Types of DC valves

Poppet valves	Ball seat valves Disc seat valves
Slide valves	Longitudinal slide valve
	Longitudinal flat slide valve
	Plate slide valve (Butterfly valve)

Poppet valves: In Poppet valves, the connections are opened and closed by means of balls, discs, plates or cones. The valve seats are usually sealed using elastic seals. Seat valves have few parts which are subject to wear and hence they have long service life. They are insensitive to dirt and are robust.

The actuating force is relatively high, as it is necessary to overcome the force of built-in reset spring and the air pressure.

3/2 Way valve

The valves have 3 flow paths and 2 switching positions. 3/2 Way Valve Normal Position Closed:\In normal position pressure line 'P' is closed. Exhaust 'R' is connected to working line 'A'. Actuation of the plunger causes the exhaust air line from A to R to be closed.

On pressing further, the disc is lifted from the seat, and the compressed air flows from P to A. On releasing the plunger, the reset spring brings the valve to the closed position.

Fig 15

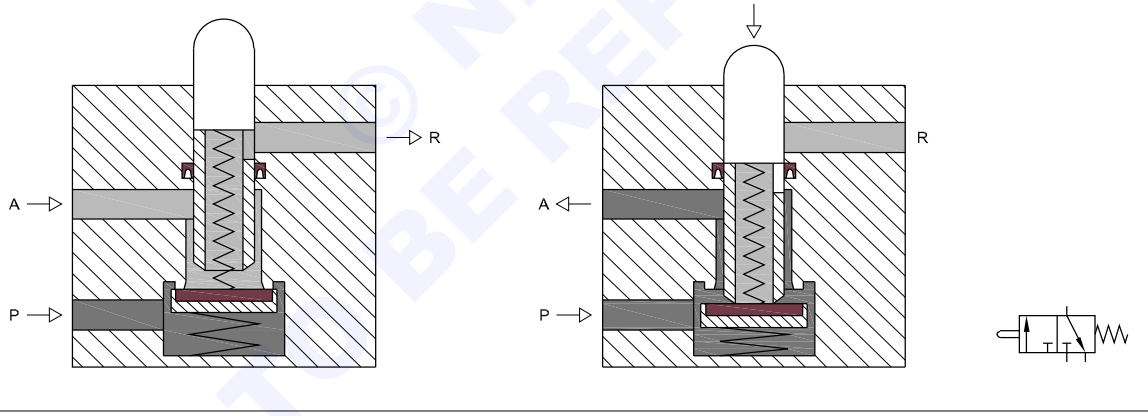

(Fig 15) Normal position closed.

The 3/2 Way valves are used for controls employing single-acting cylinders or for controlling final control elements.

3/2 Way valve normal position opened: In a valve which in normal position is open the pressure line P is connected to A. The connection from P to A is closed with a disc when operated. On pressing further, a second disc opens the sealing seat from A to R. When the plunger is released, the connections P to A is opened and R is closed.

(Fig 16) Normal position open

The valves can be actuated manually, mechanically, electrically or pneumatically.

4/2 Way valve

4/2 Way Valve has 4 flow paths and 2 switching positions. One position of the valve shows the paths P to B and A to R are open. When the two plungers are actuated. Simultaneously P to B and A to R are closed. The connection from P to A and from B to R are opened.

The valve is used for controlling double acting cylinders. 4/2 Way Valve. (Fig 17)

Solenoid valves: These valves get the switching impulse from an electrical timing device, electrical limit switches or electronic controllers. Electrical actuation is normally selected for controls involving extremely long distances and short switching times. (Fig 18)

Slide valves: In slide valves the connections are opened or closed by means of spool slides, spool flat slides or butterfly valves. Example of an 4/2 Way slide valve is shown in Fig 19.

© NIMI NOT TO BE REPUBLISHED

Fig 16

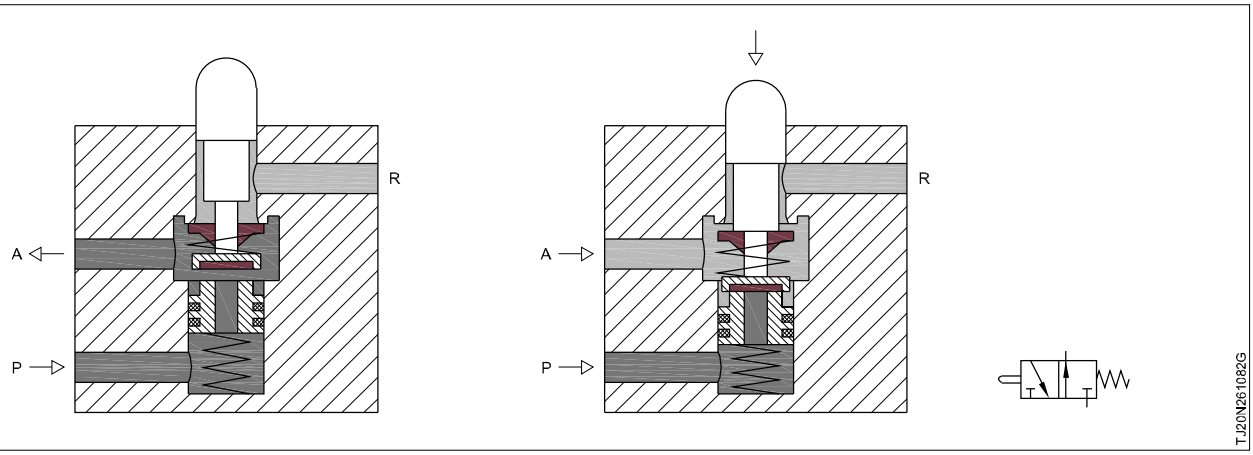

Fig 17

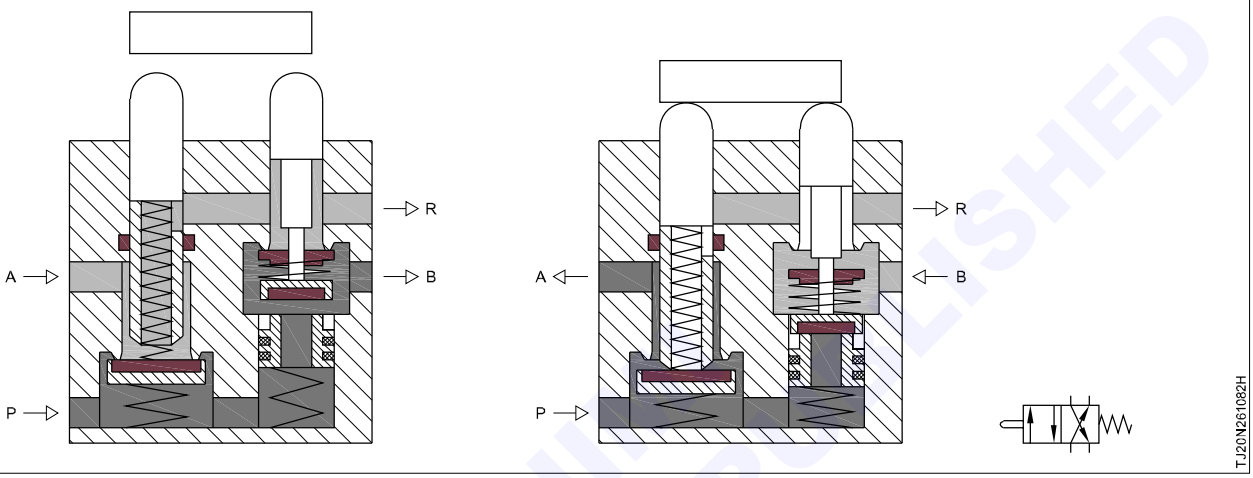

Fig 18

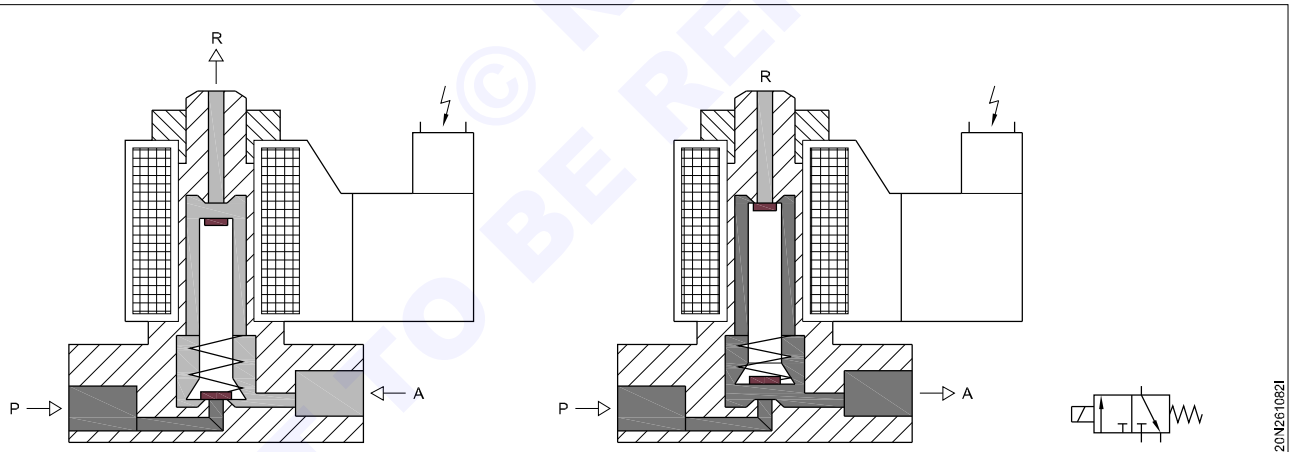

Fig 19

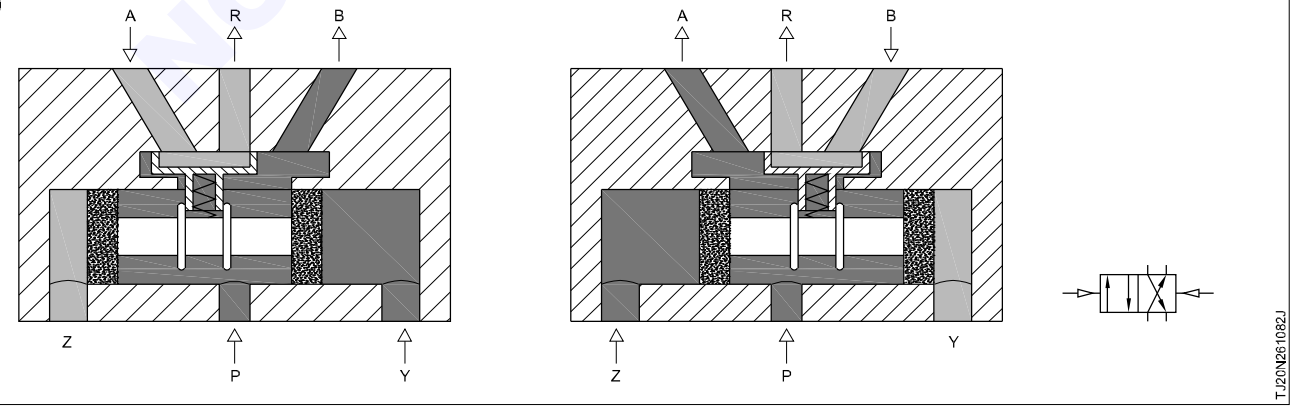

© NIMI NOT TO BE REPUBLISHED

Non-return valves: Non-return valves are devices which stop the flow in one direction and permit flow in the opposite direction. The pressure on the downstream side acts against the restrictive component, there by assisting the sealing effect of the valve.

Check valve: Check valve can stop the flow completely in one direction, and the air flows in the opposite direction with as low pressure loss as possible. Blocking of the one direction can be effected by cones, balls, plates or diaphragms. (Fig 20)

Fig 20

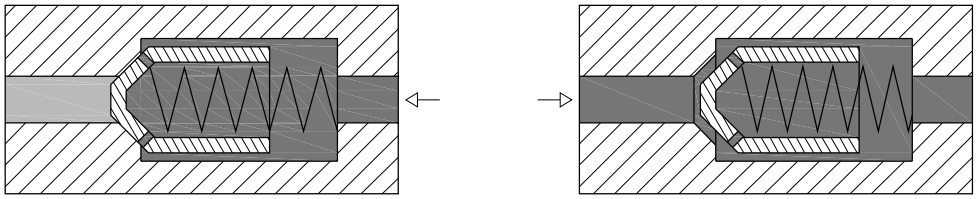

TJ20N261082K

Shuttle valve: This valve is also called “Double control valve or Double check valve”. This non-return valve has two inlets X and Y, and one outlet A, if compressed air is applied to inlet X, the ball seals off inlet Y and the air flows from X to A.

Alternatively, the air flows from Y to A and inlet X is closed. When the air flow is reversed, i.e.,a cylinder is exhausted, the ball remains in its previously assumed position because of the pressure conditions. (Fig 21)

Fig 21

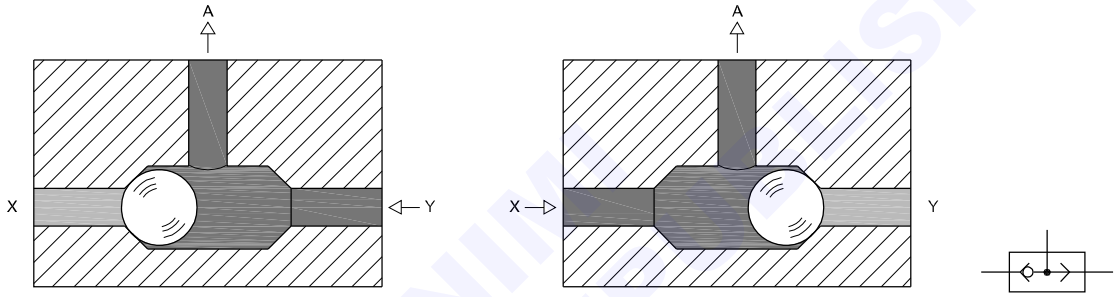

TJ20N2611082L

This valve is also called “OR Component”. It separates signals emitted from signal valves in different positions and prevents the air from being diverted through a second signal valve.If a cylinder or control valve is to be actuated from two or several positions, a shuttle valve must be used.

Throttle relief valve: This is also known as speed regulating valve. In a throttle relief valve, the air flow is throttled in one direction only.

A check valve blocks the flow of air in one direction and the air can flow on through the regulated cross section. In the opposite direction, the air can flow freely through the opened check valve. These valves are used for speed regulation of pneumatic cylinders. (Fig 22)

Fig 22

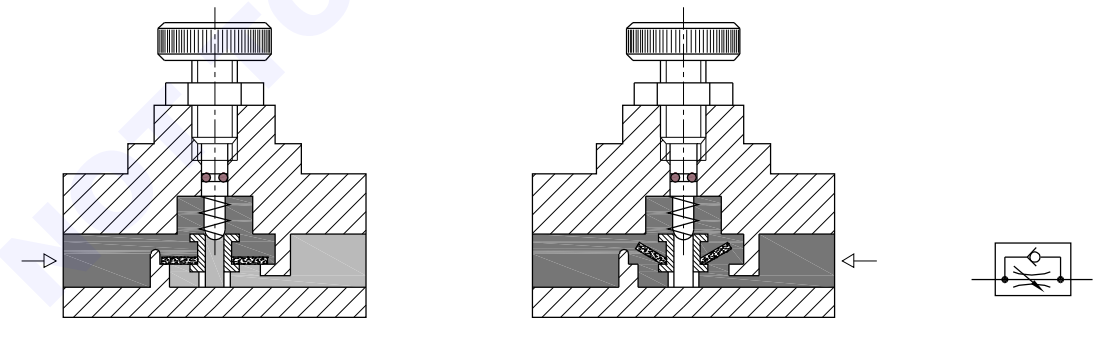

TJ20N2611082M

Quick exhaust valve: Quick exhaust valves are used to increase the piston speed of the cylinders. This enables lengthy return times to be avoided, particularly with single acting cylinders.

The valve has a blockable pressure connection P, a blockable exhaust R, and an outlet A.

If the pressure is applied at the connection P, the sealing disc completely covers the exhaust orifice R. The compressed air thus flows to A. If the pressure is removed from P, the air coming from A moves the sealing disc against connection P and closes it. The exhaust air can flow directly to atmosphere without having to follow a long and possibly narrow path through the control lines to the pilot valve. It is best to mount the quick-exhaust valve directly on the cylinder or as near as it is possible. (Fig 23)

NOT TO BE REPUBLISHED

Fig 23

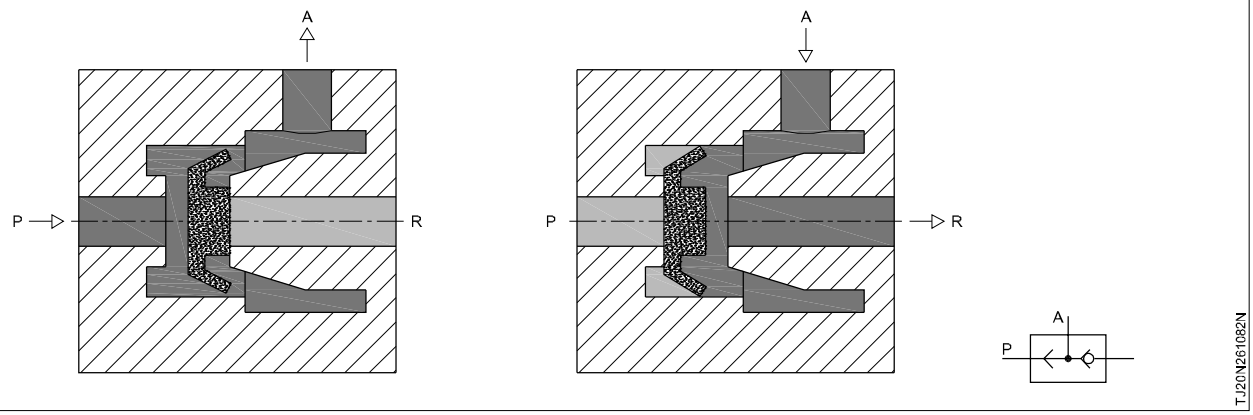

Two pressure valve: The two pressure valve has two inlets X and Y, and one outlet A. Compressed air flows through only if the signals are applied on both inlets. One output signal to X or Y blocks the air because the compound air closes the valve in the side of application of compound air. If input signals are not applied simultaneously to both sides, the signal, which is last applied, passes to the outlet. If the input signals are of different pressures, the larger of the two pressures closes the valve and smaller air pressure is transferred to outlet A.

This valve is also known as AND element.

It is mainly used for interlocking controls, check functions or logic operations.

Two pressure valve (Fig 24): This valve is also known as AND element. It is mainly used for interlocking controls, check functions or logic operations.

Fig 24

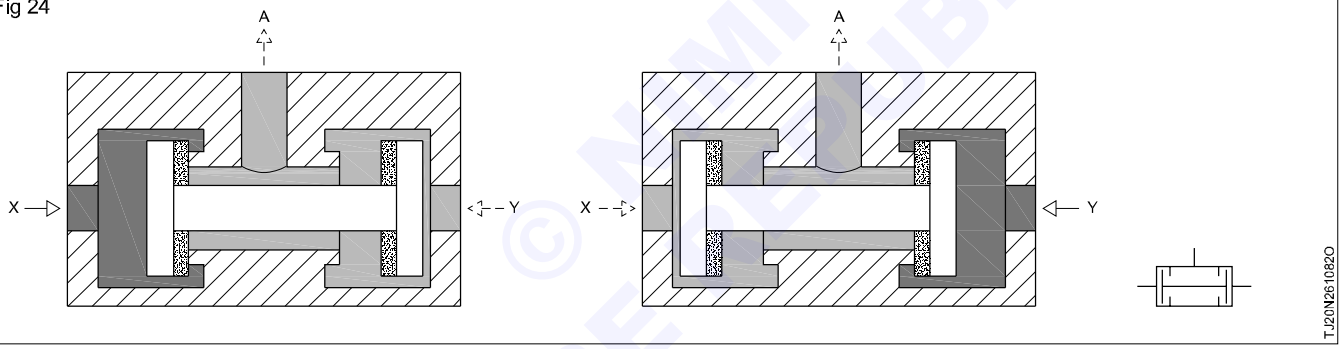

© NIMI NOT TO BE REPUBLISHED

Compound Tool

Objectives : At the end of this lesson you shall be able to
- **state introduction of compound tool**
- **explain the different parts of compound tool**
- **calculate the clearance**
- **describe shaving tool.**

Introduction

The evolution of product, dictated by the necessity to survive in the market, requires changing in manufacturing processes. This requires an integrated approach of constructive aspects, technological, organizational and management of the development stages in order to reduce as much as possible time and cost of the new products. Design time being very often decisive in terms of the marketing time of the products. Compound die design is applied to dies in which two or more cutting operation, typically piercing, blanking and drawing are performed in the same single station and completed during the single press cycle. There are many ways to desing a compound die, but since there is no place for the finished part to go during a compound die's opearion, the part must be pushed back into the scrap waste such that it can be carried out of the tool and extracted in one or another fashion later in the die cutting operation. This necessity for a separate parts extraction process is one downside of the compound die system. Advantages of a compound die system, first and foremost being the high and unsurpasses mechanical accuracy of a single step process. A second advantage of a compound die setup is its throughout. Because all internal and perimeter features of the part are created in one cycle. That means that if a strip is designed to create 10 parts, these 10 parts will be created in 10 press strokes.

Parts and function (Fig 1)

Fig 1

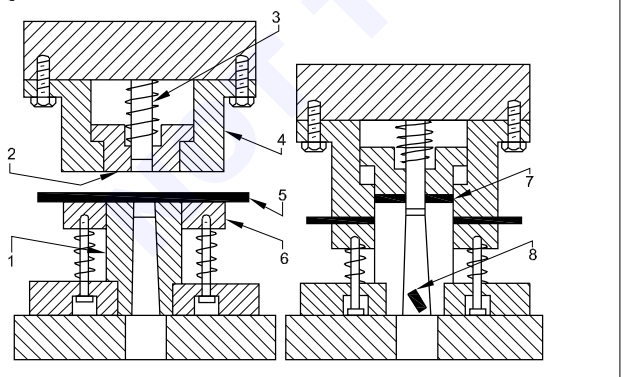

COMPOUND DIE

1.PIERCING DIE 2.STRIPPER PLATE 3.PIERCING PUNCH 4.BLANKING DIE
5.SHEET METAL 6.KNOCKOUT PLATE 7.WASHER 8.WASTE

T.J20N2710911

1 Piercing die

The designing of die block depends upon work piece size and thickness. The type of die and contour of work piece also play a important role while designing of the die block. The die blocks are made from a solid block of tool steel.

2 Stripping plate

Spring operated stripper plate is used. This type of stripper plate is also called pressure pad stripper. Its main advantage over other stripper plate during the operation.

3 Piercing punch

The type of punch used to produce washer in compound die is perforator punches. These type of punches may be fabricated or purchase form market.

4 Blanking die

Same material and procedure of piercing die. One the size is varied according to the outer dia of washer.

5 Sheet metal

According to strip layout sheet metal is made lead in part of the die.

6 Knockout plate

This is made out of mild steel fitted spring loaded screw. After cutting washer it eject the washer at the top.

7 Washer

This is the product of compound die.

8 Waste

This is the scrap material fall down throw the angular clearance produced in the die.

NOT TO BE REPUBLISHED

Calculation of Clearance

Clearance between Die and Punch

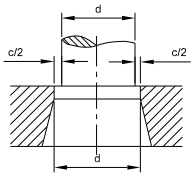

Clearance = The measured space between the mating members of a die set = c

∴ Clearance per side = c/2

$$c = d - d_1$$

Clearance for blanking and piercing.

Blanking : For a blank of definite diameter clearance should be on the punch.

Piercing : For a hole of definite diameter, clearance should be on the die.

Clearance per side (c/2) = 0.01 x s x "T_B where s = material thickness
TB =shear's stress in kg/mm^2

Sheet thickness in mm.	Clearance between punch and die					
	Mild steel	Steel moderately hard	Steel hard	Brass soft	Brass hard	Aluminium
0.25	0.01	0.015	0.02	0.01	0.025	0.02
0.5	0.025	0.03	0.035	0.025	0.03	0.05
0.075	0.04	0.45	0.05	0.03	0.04	0.07
1.0	0.05	0.06	0.07	0.04	0.06	0.10
1.25	0.06	0.075	0.09	0.05	0.07	0.12
1.50	0.075	0.09	0.10	0.06	0.08	0.15
1.75	0.09	0.1	0.12	0.075	0.09	0.17
2.0	0.10	0.12	0.14	0.08	0.10	0.20
2.25	0.11	0.14	0.16	0.09	0.11	0.22
2.5	0.13	0.15	0.18	0.10	0.13	0.25
0.75	0.14	0.18	0.20	0.12	0.14	0.28
3.0	0.15	0.18	0.21	0.13	0.16	0.30
3.3	0.17	0.20	0.23	0.15	0.18	0.33
3.5	0.18	0.21	0.25	0.16	0.19	0.35
3.8	0.19	0.23	0.27	0.19	0.22	0.38
4.0	0.20	0.24	0.28	0.21	0.24	0.40
4.3	0.22	0.26	0.30	0.23	0.27	0.43
4.5	0.23	0.27	0.32	0.26	0.30	0.45
4.8	0.24	0.29	9.34	0.29	0.33	0.48
5.0	0.25	0.30	0.36	0.33	0.36	0.50

© NIMI NOT TO BE REPUBLISHED

Compound tool construction

The general press tool construction will have following elements:

- **Shank:** It is used as a part for installing the Press tool die in the slide of the press machine with proper alignment.
- **Top Plate:** It is used to hold top half of the press tool with press slide. It is also called Bolster Plate.
- **Punch Back Plate :** This plate prevents the hardened punches penetrating into top plate. It is also called Pressure Plate or Backup plate.
- **Punch Holder:** This plate is used to accommodate the punches of press tool.
- **Punches :** To perform cutting and non cutting operations either plain or profiled punches are used.

- **Die Plate:** Die plate will have similar profile of the component where cutting dies usually have holes with land and angular clearance and non cutting dies will have profiles.
- **Die Back Plate:**This plate prevents the hardened Die inserts penetrating into bottom plate.
- **Guide Pillar & Guide Bush :** Used for alignment between top and bottom halves of the press tools.
- **Bottom plate:** It is used to hold bottom half of the press tool with press slide.
- **Stripper plate:** it is used to strip off the component from punches.
- **Strip guides:** It is used to guide the strip into the press tool to perform the operation.

Shaving Tool

Shaving: Shaving is a finishing operation. A vey small amount of material is removed around the edge of the blank or pierced hole. Its objective is to obtain a straigt smooth side wall.

The excess metal is removed as a chip similar to the action of a metal cutting tool. (Fig 2)

Fig 2

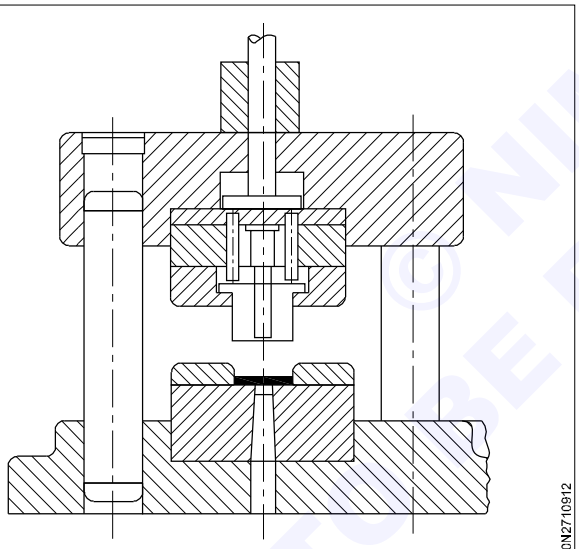

SHAVING TOOL

TJ20N2710912

Shaving

Shaving is a secondary cutting operation. It is done by removing (shaving) a small amount of material from the previously cut edge. (Fig 3)

The purposes of shaving are:

1 To improve the dimensional accuracy of the pierced part.

2 To improve the cut edge characteristics of the pierced part.

3 To improve the flatness of the pierced part.

Shaving can be adopted for inside and outside shapes.

For thicker components and for extreme accuracy requirements more than one shaving operation may be employed.

Fig 3

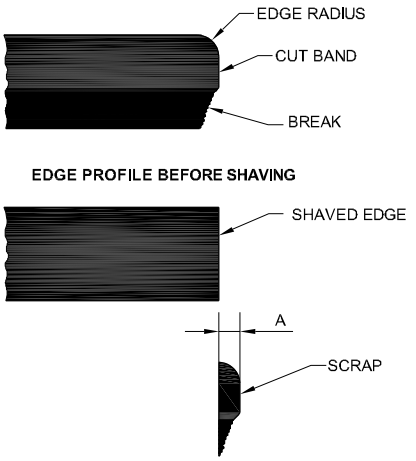

EDGE PROFILE AFTER SHAVING

TJ20N2710913

Shaving clearance: The cutting clearance in shaving operation is practically nil. A close fit between the punch and die is maintained with minimum possible clearance. (Fig 4)

Fig 4

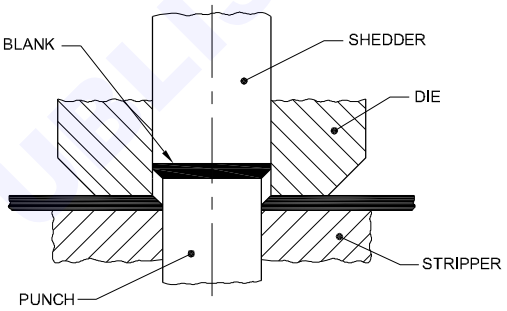

BLANKING

TJ20N2710914

In case of larger allowances a cutting clearance of 5% of shaving allowance will be acceptable.

Shaving allowance: The width of the scrap web removed by the shaving operation is the shave allowance.

Shaving allowance for steel

$A = C + 0.04S$

or minimum of 0.08 mm_1

$A_1 = C/2$ or minimum of 0.04

Shaving allowance for brass and copper

$A = C$ or minimum $0.08mm_1$

$A_1 = C/2$ or minimum 0.04mm

where

C = cutting clearance used for previous cutting operation (prior to shaving).

A = shave allowance for single shaving operation or for first shave when more than one operation is employed.

A_1 = shave allowance for second shave operation where two shaves are employed.

© NIMI NOT TO BE REPUBLISHED

Shaving direction: Shaving is done opposite to the direction of blanking or piercing. Figs 4, 5 & 6).

Fig 5

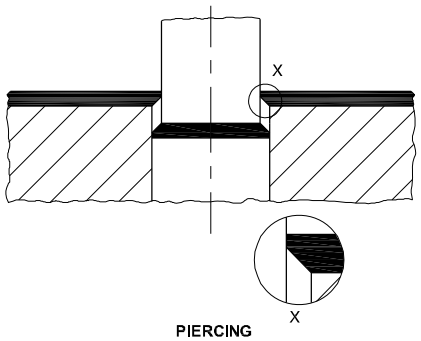

Fig 6

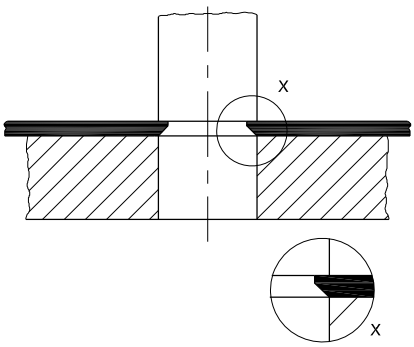

The component is kept upside down. The cutting operation is opposite to that of the previous cutting operation. Stripping force is more in case of shaving operation. It is two to three times more than the stripping force required for an equivalent blanking or piercing operation. (Fig 7 & 8)

Worked out problem

Example

A blank cut outside diameter 40mm and inside diameter 10mm is to be shaved inside and outside in a single stage. Calculate the shaving allowance and decide the component size for blanking and the pierced hole size.

Fig 7

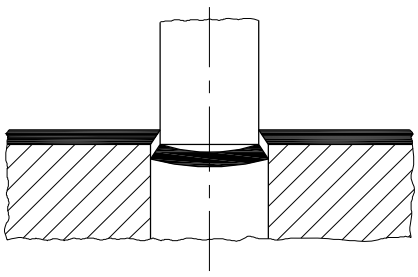

Fig 8

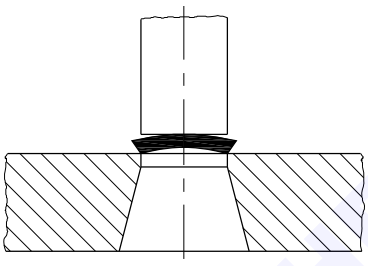

Material - MS

Thickness - 2mm

Shaving allowance for MS in single stage

A = C + 0.04S

C = 0.03 x S = 0.03 x 2mm = 0.06 mm

A = 0.06 mm + (0.04 x 2mm) = 0.14mm

Size of blank

Outside diameter = 40 + (2 X 0.14)

inside diameter = 10 - (2 X 0.14)

Outside diameter = 40.28 mm

inside diameter = 9.72 mm.

© NIMI NOT TO BE REPUBLISHED

Principles of Bending

Objectives : At the end of this lesson you shall be able to
- **state the principles of bending**
- **state the deformation process during bending**
- **name different bend elements.**

Principles of bending: Any elastic material when deformed within its elastic limit regains its shape as soon as the force is withdrawn. But if deformed beyond its elastic limit it remains permanently in the formed shape. (Fig 1)

Fig 1

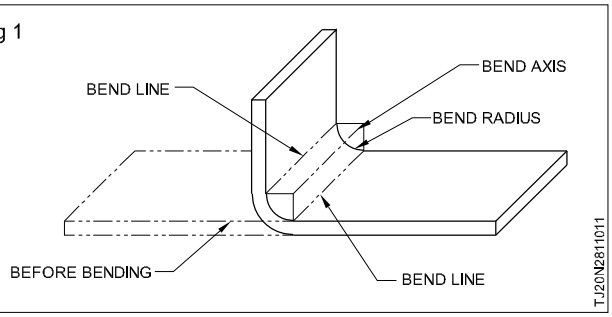

When a material is subjected to bending its outer layer experiences tensile stress. Their length increases. The inner layers experience compressive stresses. Their length shortens. The plane in the material in between the outer and inner layers experiences no stress. This is called neutral plane. It experiences no change in length. The material fibre at this plane is called neutral fibre. Neutral fibre represents the original length of the material before they were subjected to bending. (Fig 2)

Fig 2

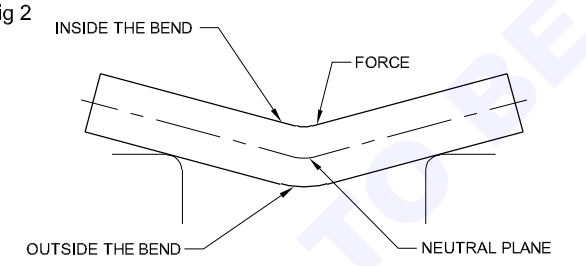

The principles of bending involve

1 Selection of material of length equal to neutral fibre.

2 Stressing it beyond elastic limit.

Plastic deformation due to bending: The act of bending causes the portion of the material which is within the area of bend to become distorted. Material beyond the bend area is also slightly affected, but it can be neglected.

The distortion is called plastic deformation.

For illustrative purposes, the crystalline structure of the metal is represented by cubical units equal in shape and size. After bending the units are displaced and deformed. (Fig 3)

Material towards the inner bend surface is under compression and the material towards the outer bend surface is under tension. Units outside the neutral plane are stretched longitudinally. Their area gets reduced. The units inside the neutral plane are compressed

Fig 3

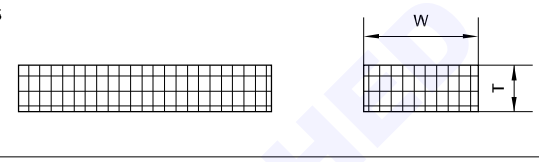

longitudinally. Their cross sectional area is increased.

In the compressed part of the bend the material bulges wider than its original width. On the tension side the material is reduced in both width and thickness. Thinning of the material on the tension side is more than the bulging on the compression side. This is because the resistance of the material to compression is more than the resistance to tension. Because of this internal movement takes place on the tension side of the bend. This shifts the neutral

Fig 4

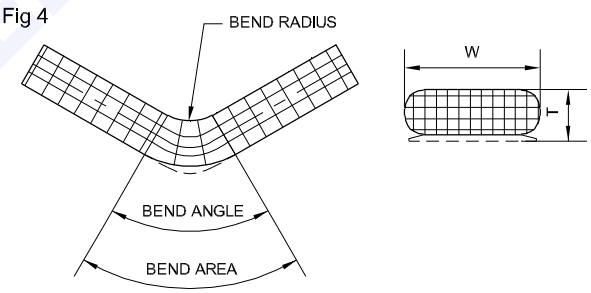

plane towards the compression side of the bend. (Fig 4)

The following factors single or in combination influence the bend severity.

1 Increase in stock material thickness increases the severity.

2 Increase in the bend angle increases the severity.

3 Decrease in the bend radius increases the severity.

The type of material influences the amount of plastic deformation which can occur on a bend. Ductile material can be bent to a greater degree. The compression bulge on the inside of the bend causes a slight localised increase in the width of the part at the bend. This condition sometimes may affect the utility of the piece part. If the localised width is not acceptable the width of the flat blank is to be decreased. If this is not acceptable undercuts can be provided at the sides of the blank at the bend area.

© NIMI NOT TO BE REPUBLISHED

Bend elements

Bend angle: The bend angle is the angle included between the two extreme positions of the bend radius. It originates at the bend axis. The bend angle is not the included angle of the piece part which originates at the outer section of the flat plane surface of the piece part.

In right angle bends both the bend angle and included angle of the piece part are right angle.

The neutral plane is a theoretical plane originated by the bending stresses. The neutral plane occurs at a distance of 0.33 to 0.5S from the inner surface.

The exact distance varies according to the type of material and the circumstances under which bending takes place. The lengths of neutral plane does not change as a result of bending. (Fig 5)

Fig 5

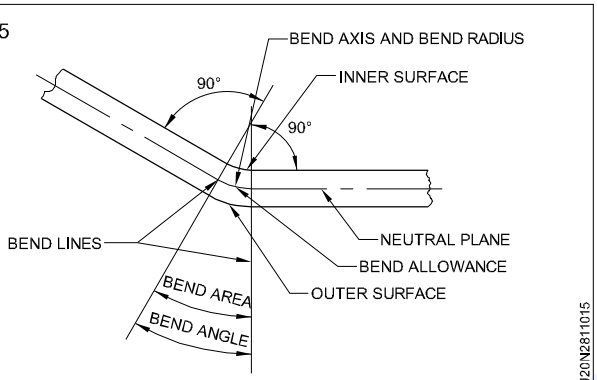

V-Bending tools

Bending tool: Vee bending dies are used to bend components in V shape. The tool consists of a punch and a vee die. the punch and die are mounted in die sets. But the punch can be directly fixed to the press ram. The figure shows bending action in a v bending tool. (Figs 6, 7 & 8)

Fig 6

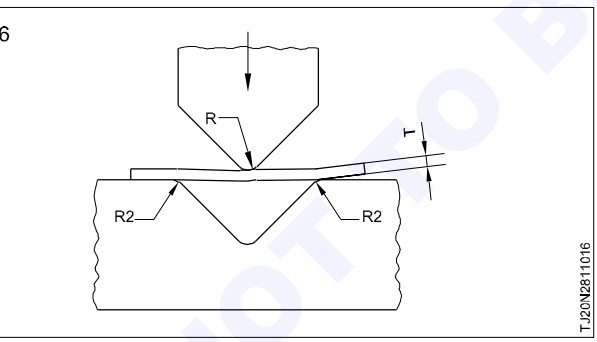

Fig 7

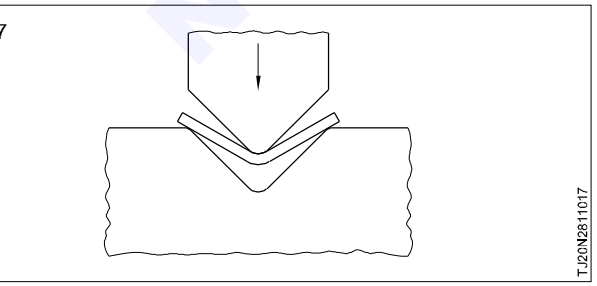

U bending tool: U bending tools are used to bend a flat strip to U shape. The tool consists of a punch U shaped die and a pressure pad. The pressure pad performs three functions.

Fig 8

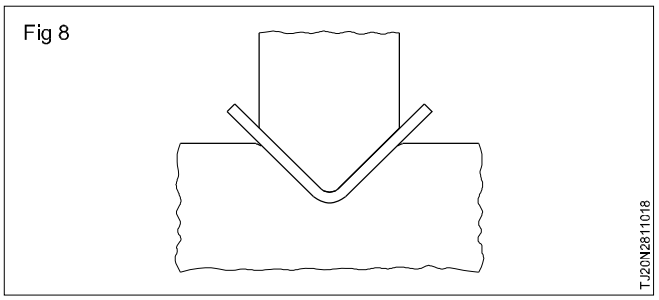

1 Holding the workpiece during bending.

2 Serves as bottoming block for setting the bend.

3 Acts as stripper or ejector.

The face of the pressure pad should be flush with die face when the tool is in open condition. The fit between the pad and die walls is slide fit (H7/g6).

This fit avoids the entry of foreign particles. During the bending operation strong lateral forces act on the die.

The die construction should be strong. U bending tools without pressure pad can be used for rough work. But the bottom of the workpiece will not be straight. It can be straightened by applying pressure at the bottom corner. This pressure should be 0.3X bending force. To get a straight bottom a convex radius can be provided at the bottom face of the die and corresponding concave radius on the punch. the concave radius should be more than or equal to R_{max}.

Construction of bending tools: The pressure pad clamps the work and does not allow it to deform.

The internal bending radius is not a true radius but a hyperbola. The curve fits a number of radii. The internal radius fits the whole curve best. The internal bending radius depends on the width of the die and not on punch radius.

Calculation of original length of strip required for bend components: The length of the neutral fibre remains same and unaffected during bending operation. In order to calculate the length of the neutral fibre is to be calculated. For larger radii the original length is nearly equal to the length of centre fibre. Centre fibre means the fibre which is geometrically in the centre of the profile thickness. (Figs 9, 10, 11 & 12)

Fig 9

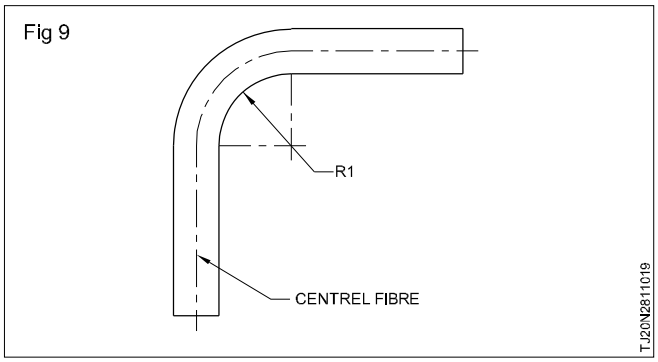

NOT TO BE REPUBLISHED

Fig 10

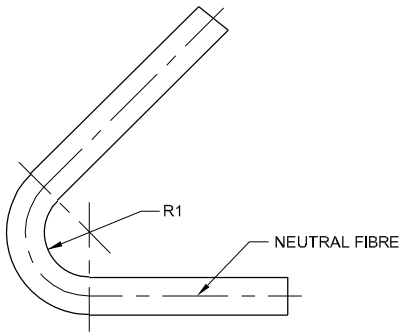

Fig 11

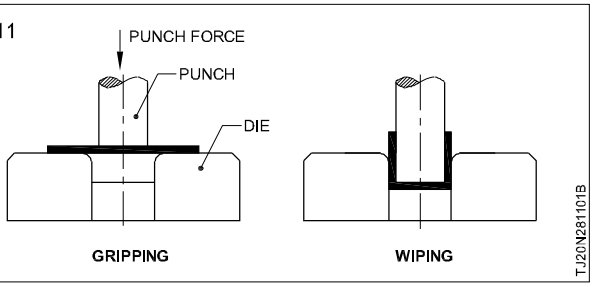

Fig 12

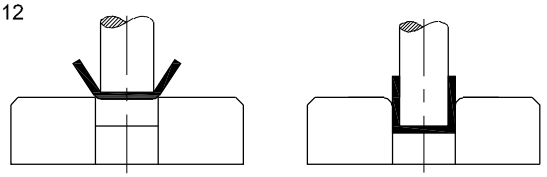

Formula for calculation

Center fibre (CF) = $\frac{\pi\alpha}{180}(Ri + s/2)$

Neutral fibre (NF) = $\frac{\pi\alpha}{180}\{Ri + (s/2 \times \xi)\}$

$Lo = A + B + \frac{\pi\alpha}{180}\{Ri + (s/2 \times \xi)\}$

Where

Lo = original length

A+B = length of straight (unbent)

Ri = internal radius

s = sheet thickness

ξ = correction factor (to be choosen from graph).

If Ri/s value exceeds 5, the length of strip should be calculated by using the centre fibre formula. (Fig 13)

Worked examples

Example 1

Calculate the length of strip required to produce the bend component shown in Figure. (Fig 14)

Original length Lo

$= A + B + \frac{\pi\alpha}{180}(Ri + s/2)$

Fig 13

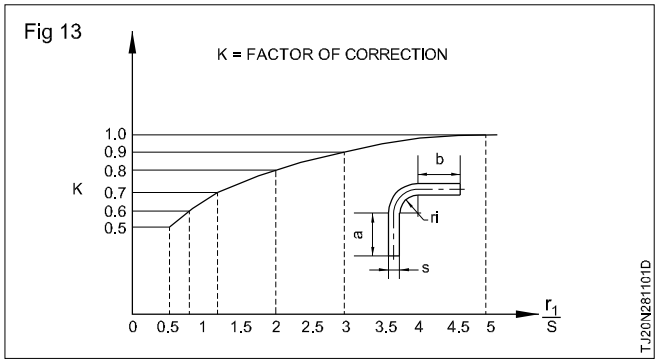

Fig 14

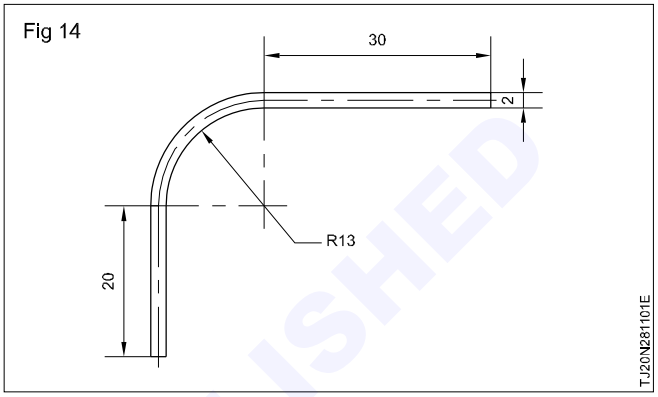

$= 20 + 30 + \frac{3.142 \times 90}{180}(Ri + s/2)$

$= 50 + 1.571 \times 14$

$= 50 + 21.99$

$= 71.99$ mm

Example 2

Calculate the length of strip required to produce the component shown in figure. (Fig 15)

Fig 15

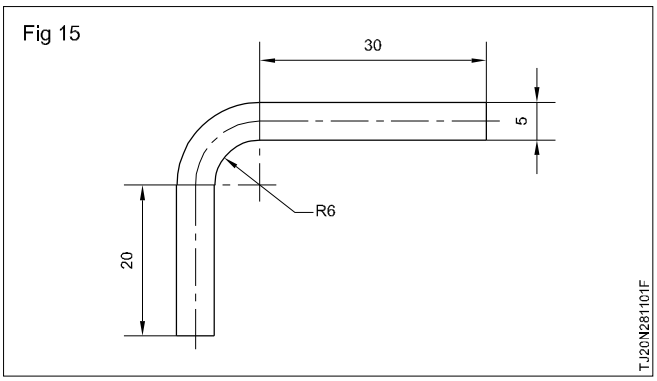

$Lo = A + B + \frac{\pi\alpha}{180}\{Ri + (s/2 \times \xi)\}$

$= 20 + 30 + \frac{3.142 \times 90}{180}\{6 + (5/2 \times 0.7)\}$

$= 50 + 1.571\ (6+1.75)$

$= 50 + 12.18$

$= 62.18$ mm.

NOT TO BE REPUBLISHED © NIMI

Example 3

Develop the blank size of the component shown in Fig 16.

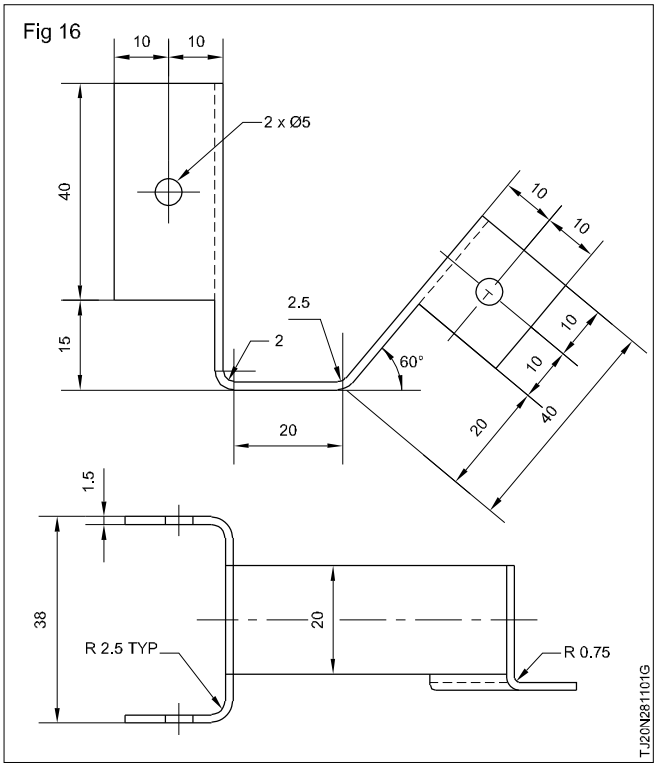

Lengthwise

L1 = 40 + [15-(1.5+2)]

= 40 + 11.5 = 51.55 mm

$$L2 = \frac{\pi\alpha}{180}\{Ri + (S/2 \times \xi)\}$$

$$= \frac{3.142 \times 90}{180}\{2 + (1.5/2 \times 0.75)\} = 4.026\,mm$$

L3 = 20 – 2 = 18mm

$$L4 = \frac{\pi\alpha}{180}\{Ri + (S/2 \times \xi)\}$$

$$= \frac{3.142 \times 60}{180}\{2.5 + (1.5/2 \times 0.75)\} = 3.207\,mm$$

L5 = 20 + 10 + 10 = 40

= 40 mm

Total = 51.5 + 4.026 + 18 + 3.207 + 40 = 116.733 mm

Width wise (SIDE A)

L1 = 20 = 20 mm

$$L2 = \frac{\pi\alpha}{180}\{Ri + (S/2 \times \xi)\}$$

$$= \frac{3.142 \times 90}{180}\{0.75 + (1.5/2 \times 0.5)\} = 1.767\,mm$$

L3 = 20 - (1.5 + 0.75) = 17.75mm

Total = 20 + 1.767 + 17.75 = 39.517 mm

Widthwise (Side B)

L1 = 20 - (2.5 +1.5) = 16 mm

$$L2 = \frac{\pi\alpha}{180}\{Ri + (S/2 \times \xi)\}$$

$$= \frac{3.142 \times 90}{180}\{2.5 + (1.5/2 \times 0.75)\} = 4.811\,mm$$

L3 = 38 - (1.5 + 2.5) 2 = 30 mm

$$L4 = \frac{\pi\alpha}{180}\{Ri + (S/2 \times \xi)\}$$

$$= \frac{3.142 \times 90}{180}\{2.5 + (1.5/2 \times 0.75)\} = 4.811\,mm$$

L5 = 20 - (2.5+1.5) = 16mm

Total = 16 + 4.811 + 30 + 4.811 + 16 = 71.622mm

Calculation of maximum stress

Length of centre fibre or length of neutral fibre when the radii is large,

$$= \frac{\pi\alpha}{180}(ri + s/2) = Ln$$

Length of out side fibre = $\frac{\pi\alpha}{180}(ri + s) = Lo$

Length of inner fibre = $\frac{\pi\alpha}{180}ri = Li$

$$STRAIN = \frac{Lo - Ln}{Ln}$$

$$= \frac{\pi\alpha}{180}\left[\frac{(ri + s) - \frac{\pi\alpha}{180}(ri + s/2)}{\frac{\pi\alpha}{180}(ri + s/2)}\right]$$

$$= \frac{\pi\alpha[(ri + s) - (ri + s/2)]}{\frac{\pi\alpha}{180}(ri + s/2)}$$

$$= \frac{(2s - s)/2}{(2ri + s)/2}$$

$$= \frac{[(ri + s) - (ri + s/2)]}{(ri + s/2)}$$

$$= \frac{2(2s - s)}{2(2ri + s)}$$

$$TRAIN = \frac{s}{2ri + s}$$

By Hooke's Law stress/strain = E (modulus of elasticity).

$$= \frac{b}{\frac{s}{2ri + s}}$$

$$= \frac{E \times s}{2ri + s}$$

NOT TO BE REPUBLISHED © NIMI

Calculation of maximum radius and minium radius: The work piece straightness if 'b' is less than y (yield stress) in order to obtain a permanent bend the stress on bending area must be higher than the yield point stress of the material.

Rmax is the radius which will produces a permanent bend in the component. The maximum value of radius to which a particular material could be bent is when 'b' is just equal to y.

$$y = \frac{Es}{2ri + s}$$

$$2ri + s = \frac{Es}{y}$$

FOR Rmax CONDITION

$$2\ Rmax + s = \frac{Es}{y}$$

$$2\ Rmax = \frac{Es}{y} - S$$

$$Rmax = \frac{ES}{2y} - \frac{S}{2}$$

In this case S/2 can be neglected (compared to the Rmax the value S/2 is very small).

$$Rmax = \frac{ES}{2y}$$

For a permanent bend, the radius of the bend should not exceed Rmax. If it exceeds Rmax, the material will not be stressed to the yield point, and will come back to original condition on removal of the punch force.

Calculation of minimum radius: There is also a limit for bend radius on minimum side. If the bend radius compared with the thickness of the sheet is below a certain limit, the stress in the outside fibre will exceed the ultimate tensile stress. This will lead to rupture at the bend area.

Rmin can be calculated from the formula

Rmin = C × S

Where C is constant

S is sheet thickness in mm. value for C

1	Mild steel	-	1.5
2	Deep drawing steel	-	0.5
3	Construction steel	-	2
4	Copper	-	0.25
5	German silver	-	0.45
6	Brass	-	0.4
7	Aluminium hard	-	0.4
8	Aluminium pure hard	-	0.7
9	Aluminium half hard	-	1.4
10	Gun metal	-	1.2
11	Stainless steel	-	0.5
12	Brass 75	-	0.3

Worked example

Example 1

Calculate the minimum and maximum radius to which a mild steel strip 25 x 1mm can be bent

E = 210 GN/m^2 y = 210 Nmm^2

$$Rmax = \frac{ES}{2y} = \frac{1 \times 210 \times 10^9 \times 10^{-6}}{2 \times 210}$$

Rmax = 500mm

Rmin = C × S

C = 1.5

S = 1

Rmin =1.5 × 1

Rmin =1.5mm

Bending radius for 'V' dies: Optimum size for bending radii depends on the job. For average conditions bending radii is from 0.5S to S. Heavier stock thickness requires proportionally larger bending radii.

Short bends and low angle bends require smaller bending radii (some times less than 0.5S). When the bend legs are long larger bending radii may be required. Smaller bending radii have a better gripping effect upon the stock material. The reaction of the work piece is controlled more efficiently. Thus smaller bending radii produce bends which are more accurate than those produced with larger bending radii. It is a good practice to make the bending radii slightly smaller than the requirement. Size can be increased if necessary at try out. (Figs 17 & 18)

For symmetrical V die the size of both the bending radii should be idendtical. If the bending radii differ in size the bending action is thrown out of balance and the work piece shifts in the direction of the smaller radii.

For asymmetrical V die bending radius on the high angle side should be larger than the radius on the low angle side. The larger radius of the high angle side permits the metal on that side to slide more freely. This equalises the bending action. Quality of surface finish on bending radii is of great importance. The arc surfaces of all bending radii should be finished to a high polish. The lay should be parallel to the pulling motions of the stock material during bending. (Figs 19, 20 & 21)

Bending force for V bending operation

V bending force Fb = Ra + Rb

bending moment Mb = W/2 × Ra

or w/2 × Rb

assuming Ra = Rb

Mb = (W/2) × (Fb/2)

NOT TO BE REPUBLISHED © NIMI

according to moment of resistance equation $Mb/I = \frac{Rm}{y_1}$

Fig 17

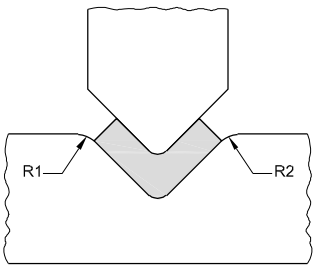

SHORT BEND

TJ20N281101H

Fig 18

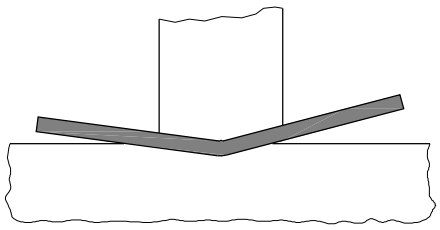

LOW ANGLE BEND

TJ20N281101I

where

Rm is the tensile stress

y_1 is the shortest distance to the neutral fibre

I is the moment of inertia (Fig 22)

for rectangular section

$I = bs^3/12$

Fig 19

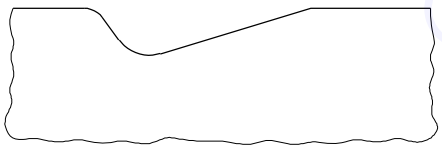

BENDING RADII - ASYMMETRICAL V - DIE

TJ20N281101J

Fig 20

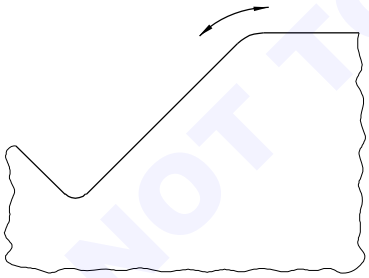

DIRECTION OF LAY

TJ20N281101K

where b is the width and s is the sheet thickness

assume y = s/2 (center fibre)

$$\frac{W/2 \times Fb/2}{bs^3/12} = \frac{Rm}{y} = \frac{Rm}{S/2}$$

$W/2 \times Fb/2 \times 12/bs^3 = Rm \times 2/s$

Fig 21

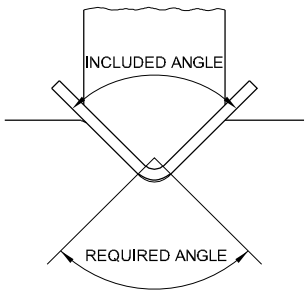

ANGULAR RELATIONSHIP

TJ20N281101L

$$Fb = \frac{8bs^3}{12ws}$$

Instead of 8/12 a constant 'C' is introduced. 'C' depends on the material, the angle of bend and the radius made in the component. Also the assumption

Fig 22

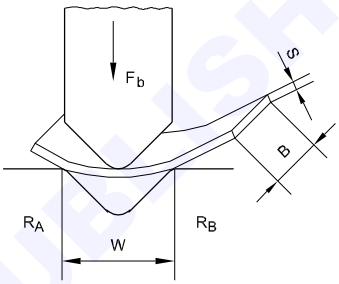

TJ20N281101M

$y^1 = s/2$ will change as explained in the blank length calculation.

$$Fb = \frac{Cb2^3 Rm}{W}$$

Where

C is a constant

b the width of the component in mm.

S sheet thickness in mm.

W width of the die in mm.

The value of C can be taken from the graph or can be calculated using the formula.

C = 1 + 4s/w

The formula can be used upto w = 20s (Fig 23).

Bending force for u bending: The bending force depends on the following factors.

1 Material

2 Sheet thickness.

3 Internal radius of die (bending radius).

The force cannot be calculated very accurately. But suficiently accurate results are obtained by employing the same formula used for v bending dies.

© NIMI NOT TO BE REPUBLISHED

$$Fb = \frac{C \times bs^2 \times Rm}{W}$$

W is two times the distance of point of contact of punch and die.

W/2 = R1 + R2 + Cb

Fig 23

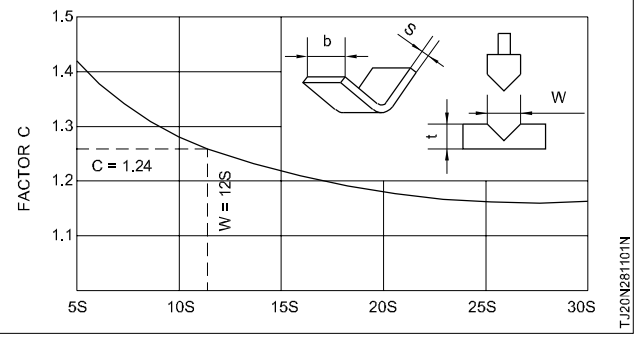

Cb = bending clearnce

W = 2(R1 + R2 + Cb)

F_b = bending force

$$= Cbs^2 \times \frac{Rm}{2(R1 + R2 + cb)}$$

Where

C is constant b = width of bend in mm; S = sheet thickness in mm; Rm ultimate tensile stress; R1 die radius; R2 punch radius, Cb bending clearence.

Press force is approximately 30% more than bending force. This is to over come the spring back force of pressure pad. (Fig 24)

Worked examples

Example 1

Calculate the V bending force for mild steel sheet thickness 2 mm. strip width b = 20 mm. W = 30mm.

C = 1.25

Rm = 400N/mm²

Bending force Fb = $\frac{C \times b \times s^2 \times Rm}{W}$

$$= \frac{1.25 \times 20 \times 2 \times 2 \times 400}{30} = 1333.3N$$

Fig 24

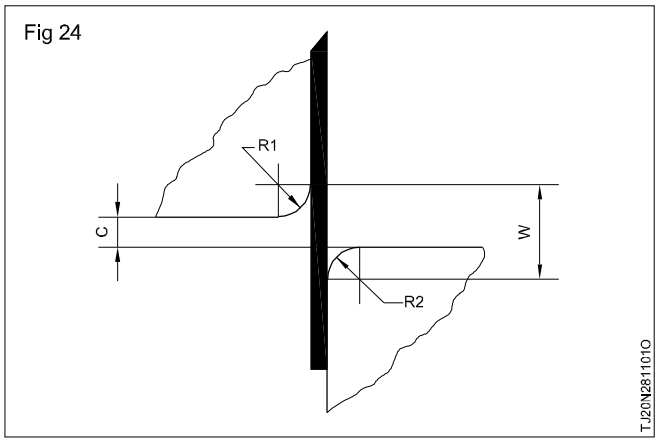

Example 2

Calculate the u bending force for ms sheet of thickness 3 mm.

Punch radius = 5mm

Die radius = 5s

Strip width (b) = 70mm

Minimum radius constant(C) = 1.2 (for mild steel)

Tensile stress (Rm) = 400N/mm²

Bending clearance (Cb) = 3.15

U Bending force = $\frac{C \times bS^2 \times Rm}{2(R1 + Cb + R2)}$

C = constant = 1.2

b = 70 mm

s = 3 mm

Rm = 400N/mm²

R1 = 5s = 5 x 3 = 15 mm

R2 = 5 mm

$$\frac{1.2 \times 70 \times 3 \times 3 \times 400}{2(15 + 3.15 + 5)}$$

$$= \frac{302400}{46.3} = 6531.31N$$

© NIMI NOT TO BE REPUBLISHED

Spring Back

Objectives : At the end of this lesson you shall be able to
- **define spring back**
- **state the methods adopted to overcome spring back in 'V' bending operation**
- **state the methods adopted to overcome spring back in 'U' bending operation**
- **calculate the angle and radius for overbending.**

Spring back: In bending operations the elastic limit of the metal in process is exceeded, but its ultimate strength is not. Therefore some of the original elasticity of the stock material will be present in the material after the bending operaton is over. Because of this when the force (punch) is withdrawn the material on the compression side of the bend tend to expand slightly. The material on the tension side tries to contract. The combined result is that the work piece tends to resume its original shape. This causes the bend to spring open a little amount. This reaction of the material is called spring back.

The spring back varies according to the thickness, type and condition of the stock material. It also varies directly in proportion to the size of the bend radius. The larger the bend radius the greater the spring back.

Spring back in V-bending: The following methods are employed to avoid or over come spring back:

Overbending: Overbending is the simplest way to correct spring back. It is done by making the punch angle (angle B) smaller by the required amount. For soft steel, brass, aluminium or copper spring back 0 to 1°, for 1/4 hard 1/2 hard materials 1 to 5°. For hardened material 12 to 15° or more. These values are only approximate values, because many variables influence the spring back. Correct values can be found out only by experiment. (Fig 1)

Fig 1

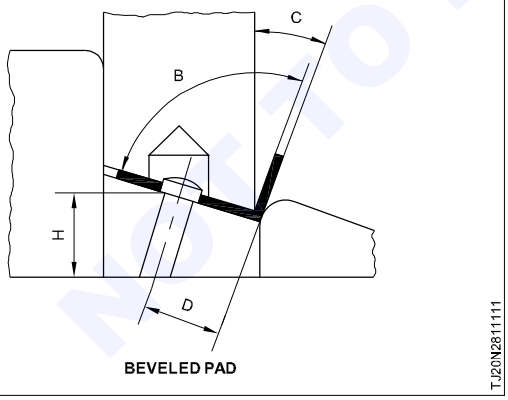

Corner setting on V-bending tools: This is the most effective way of avoiding spring back. This is the method of eliminating spring back than of making compensating allowance. Setting is accomplished by coining (squeezing) the stock material at the bend area. The coining effect causes additional compressive strain within the material. The extra compression strains overcome the spring back tendencies. Since the set is made in the bend, the practice of setting in bending operation is refered to as corner setting. (Fig 2)

Fig 2

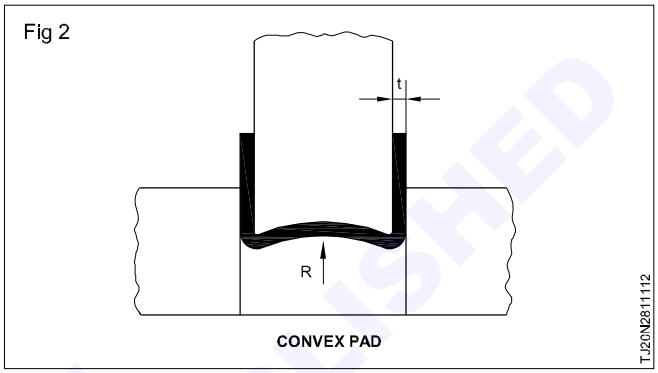

Offset punch method: The face of the punch is offset in order to achieve a coining penetration in the bend area. If offset dimensions are unnecessarily deep, it will weaken the piece part. An offset depth of 5% of sheet thickness is normally used. (Fig 3)

Fig 3

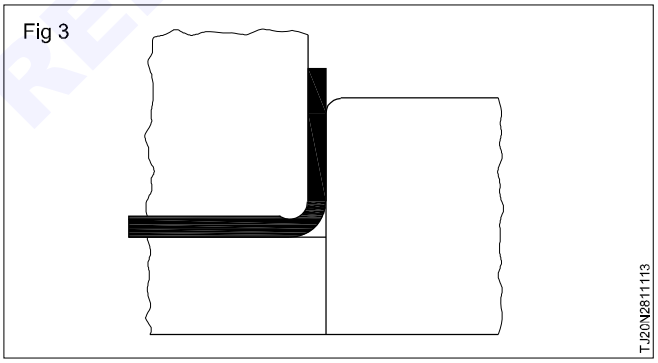

Angular punch relief: An angular differntial is provided between the included angle of the punch and the included angle of the die opening. The amount of angular difference varies according to the pierced part condition.

The reduced punch angle permits the work piece to overbend while setting action takes place. Setting is in effect a coining operation. Coining large area of the work piece will require excessive punch force. Also setting is effective only in the general area of bend. Because of the above reasons the set area should be reduced to the smallest practical size. Setting increases the compressive strains in the bend. so the compression bulge at the bend will be more. This condition should be taken care by providing necessary allowances in the blank.

Spring back in U-bending dies: For compensating spring back, overbending can be used in u bending. In the convex pad method the spring back in another area

NOT TO BE REPUBLISHED

is utilised. The web (bottom) of the work piece is formed. The elastic limit of the stock material is not exceeded. When the work piece is removed from the tool the web spring back to a flat plane. This causes the bend legs to pivot inward around the bend axis. This compensates for the spring back of the bend legs. For large work pieces punch side wall relief method is used.

There are two methods

1 Punch side wall relief-angular.

2 Punch side wall relief -straight undercut.

These methods are employed when the spring back is less. (Fig 4)

Fig 4

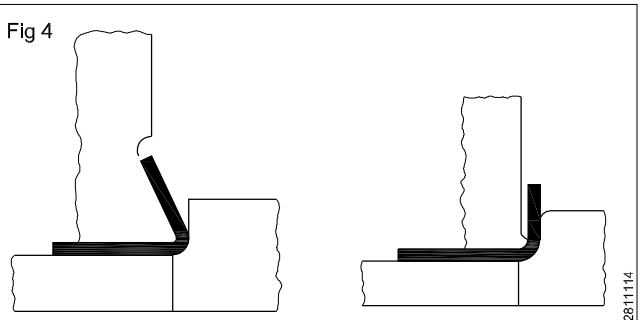

PUNCH SIDE WALL - RELIEF

T.J20N2811114

Corner setting in pressure pad dies: The punch corner sinks into the stock material at the bend area. The resulting coining effect eliminates the residual elasticity on the bend area and thus eliminates the tendency to spring back. An offset of 5% of the sheet thickness is normally used. (Fig 5)

This method affects the dimensions of the piece part. If the punch face was flat piece part height will be 'H' the corner offset an amount equal to the depth of offset 'D'. The resulting piece part height is 'H2'. This displacement must be compensated for when determining the flat blank length. Because of the strength less in the bent area of the workpiece, this method cannot be used in some instances. In such cases the fillet method can be used. Here the set is achieved by squeezing the stock material against the outer surface of the bend area. (Fig 6)

Fig 5

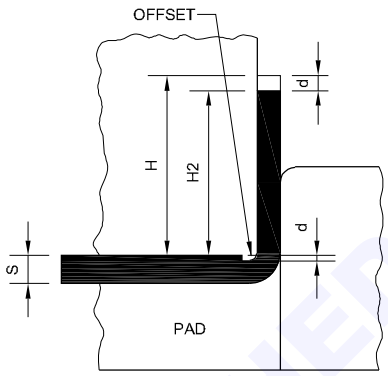

OFFSET PUNCH FOR CORNER SETTING

T.J20N2811115

Fig 6

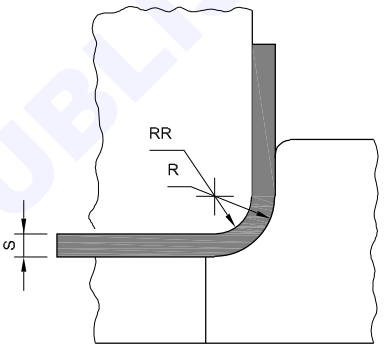

DIE FILLET FOR CORNER SETTING

T.J20N2811116

Stripping 'U' Bends

Objective : At the end of this lesson you shall be able to
- **state the methods for stripping bent components.**

Stripping U bends: U bending operation requires two opposed stripping actions.

1 Stripping the workpiece out of the die opening.
   - the pressure pad performs this function.

2 Stripping the workpiece from the punch.
   - positive knockout offs actuated by the knockout system of the press
   - the workpiece is knocked off the punch.

Spring actuated plungers: Spring actuated plungers can be used as strippers. Plungers should be located close to the bend. This is to avoid distortion of the workpiece during stripping. Plungers should not be located within the area covered by the bend radius. This is to avoid distortion of the workpiece during bending. Plungers are hardened. This method is adopted for shallow bends in thinner materials. (Fig 1)

Fig 1

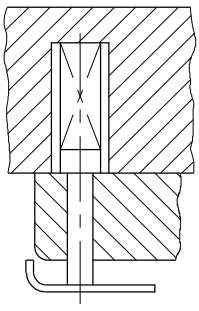

UPSTROKE

T.J20N2811121

Hook strippers: The stripping force is exerted against the end of the bend leg. Distortion to pierced part is minimised. The stripping is positive and effective when a great amount of stripping force is required. But these strippers may present problems while loading and unloading the workpieces during production.

NOT TO BE REPUBLISHED © NIMI

Positive knock offs: The simplest positive knock off is the single rod type. The knock off impact is concentrated in a small area at the centre of the component. Such knock offs can be used when the component is heavy enough to resist distortion. Another disadvantage is the possibility of "swivelling" of the component. This may lead to the damage of the die. A spreader plate assembled to the knockout rod effectively distributes the stripping force. (Fig 2)

Fig 2

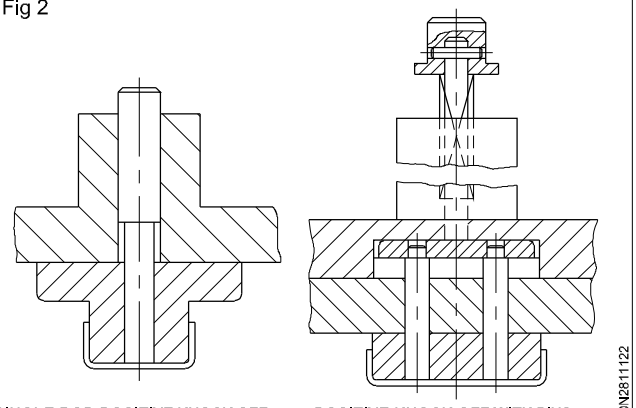

Effect of grain direction on bending: The most favourable condition exists when the axis of the bend is perpendicular to the grain direction. The most severe bend, practical for the type of material can be made in this direction.

The least favourable condition exists when the axis of the bend is parallel to the grain direction. The ability of the material to withstand bending strains increases as the angle approaches 90°.

Effect of burr side on bending: If the blanked piece is loaded in such a way that the burr side is located on the outer surface of the bent piece part the burr will drag around the bending radius and into the die opening. This causes excessive wear on the die. If the piece is loaded such that the burr side is located on the innner surface of the bent part, the burr will face the punch.

Since there is no drag between the workpiece and the punch,the burr cannot erode the punch. Edge condition also affects the degree of bending. Smooth edge permits more severe bending than rough edges. Cracks may appear on the bend area if the burr side of the blank is on the outer surface of the bend (tension side).

The irregular surface or the fracture side(burr side) will have microscopic cracks. This will develop when tensile force is applied(during bending).

But if the cut band of the blank is on the outer surface of bend, the burrside automatically gets compressed during the bending operation. It is always advisable to keep the blank, burr side facing the punch.

The burr side of the piece part (bent part) is often predetermined in accordance with the functional requirements of the piece part in the end product. When such a condition exists the pierced part should be loaded accordingly.

Bending in proximity to pierced holes: Holes pierced before bending will get distorted if they are too close to the bend area. Distortion will be minimised if the distance from the bend area to the centre of the hole is held to a minimum of 1.5 times sheet thickness. (Fig 3)

Fig 3

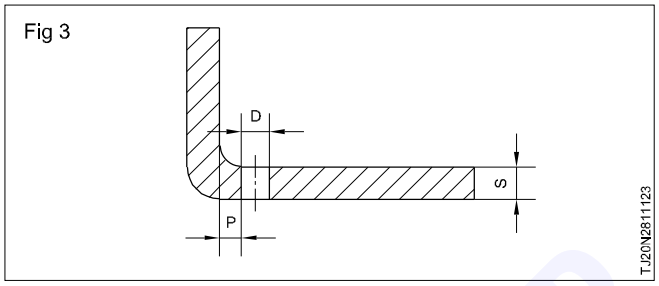

Materials for bending: Hard a very stiff, springly, cold rolled strip intended for flat work,where ability to withstand cold forming is poor and unsuitable for bending. (Fig 4)

Fig 4

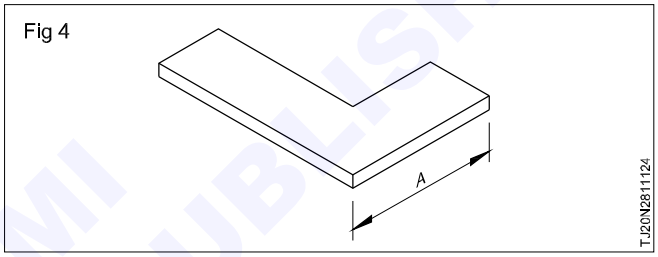

Half hard: Moderately stiff cold-rolled strip suitable for limited bending. Right angled bends may be made at 90° to the grain direction around a radius equal to thickness. (Fig 5)

Fig 5

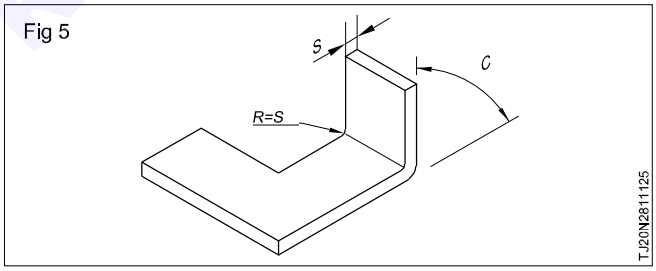

Quarter hard: A medium-soft cold-rolled strip suitable for limited bending, forming and drawing. May be bent to 180° across the grain and to 90° parallel with the grain and around a radius equal to the thickness. (Fig 6)

Fig 6

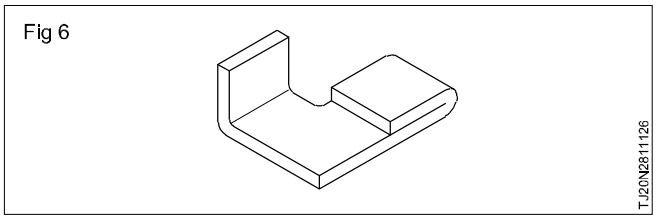

Soft: Soft, ductile cold-rolled strip suitable for fairly deep drawing operations where surface disturbances such as stretched strains are objectionable. Strip of this temper is capable of being bent flat upon itself in any direction. (Fig 7)

© NIMI NOT TO BE REPUBLISHED

Fig 7

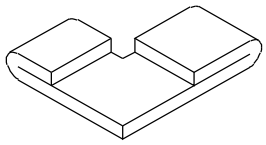

T.J20N2811127

Dead soft: Soft ductile, cold-rolled strip produced without definite control of stretcherstrains and fluting. It is suitable for difficult draw applications where such surface disturbances may be tolerated. It is suitable for bending flat upon itself in any direction. (Fig 8)

Fig 8

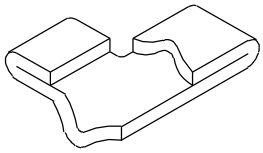

T.J20N2811128

© NIMI
NOT TO BE REPUBLISHED

Lubricants and Lubrication

Objectives : At the end of this lesson you shall be able to
- **state the purpose of using lubricants**
- **state the properties of lubricants**
- **state the qualities of a good lubricant.**

With the movement of two mating parts of the machine, heat is generated. If it is not controlled the temperature may rise resulting in total damage of the mating parts. Therefore a film of cooling medium with high viscocity is applied between the mating parts which is known as a 'lubricant'.

A 'lubricant' is a substance having an oily property available in the form of fluid, semi-fluid, or solid state. It is the lifeblood of the machine, keeping the vital parts in perfect condition and prolonging the life of the machine. It saves the machine and its parts from corrosion, wear and tear, and it minimises friction.

Purposes of using lubricants

- Reduces friction.
- Prevents wear.
- Prevents adhesion.
- Aids in distributing the load.
- Cools the moving elements.
- Prevents corrosion.
- Improves machine efficiency.

Properties of lubricants

Viscosity

It is the fluidity of an oil by which it can withstand high pressure or load without squeezing out from the bearing surface.

Oiliness

Oiliness refers to a combination of wettability, surface tension and slipperiness. (The capacity of the oil to leave an oily skin on the metal.)

Flash point

It is the temperature at which the vapour is given off from the oil (it decomposes under pressure soon).

Fire point

It is the temperature at which the oil catches fire and continues to be in flame.

Pour point

The temperature at which the lubricant is able to flow when poured.

Emulsification and de-emulsibility

Emulsification indicates the tendency of an oil to mix intimately with water to form a more or less stable emulsion. De-emulsibility indicates the readiness with which subsequent separation will occur.

Methods of Applying Lubricant

Objectives: At the end of this lesson you shall be able to
- **name the different types of lubricators**
- **state the gravity feed methods of applying lubrication**
- **state the splash methods of applying lubrication**
- **name the different methods of lubrication**
- **distinguish between the different methods of lubrication.**

The following methods are used for efficient lubrication.

- Gravity feed method
- Force feed method
- Splash method

Gravity feed method

There are numerous ways of employing this principle, varying from the simple oil hole to the more elaborate wick and glass-sided drip feed lubricators in which the flow of the oil may be controlled and observed through the glass. A selection of these lubricators is shown in Fig 1.

Force (Pressure) feed method

There are various systems of lubrication employing a pressure feed to the lubricant, and the most important of such systems may be classified roughly into the following.

- Continuous feed of oil under pressure to each bearing concerned. In this method an oil pump driven by the machine delivers oil to the bearings and back to a sump from which it is drawn by the pump.
- Pressure feed by hand pump in which a charge of oil is delivered to each bearing at intervals (once or twice a day) by the machine operator. (Fig 2)

© NIMI NOT TO BE REPUBLISHED

Fig 1

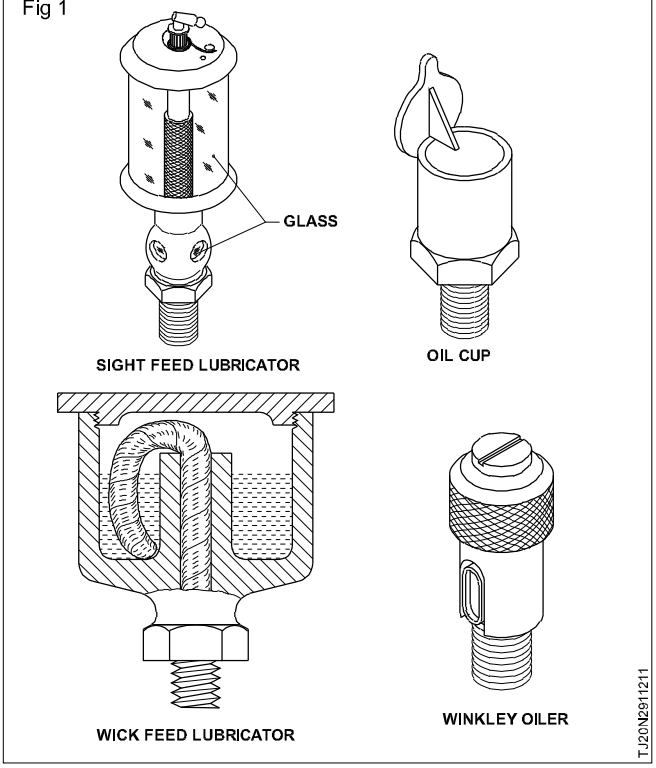

Fig 2

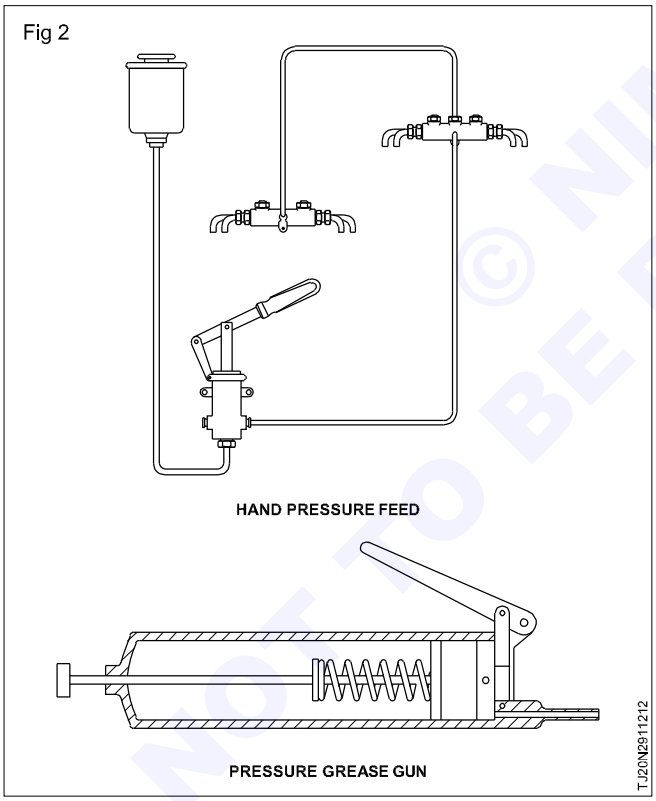

- Oil or grease gun method. The oil hole leading to each bearing is fitted with a nipple and by pressing the nose of the gun against this and the lubricant is forced into the bearing. (Figs 3 a, b, c & d)

Fig 3

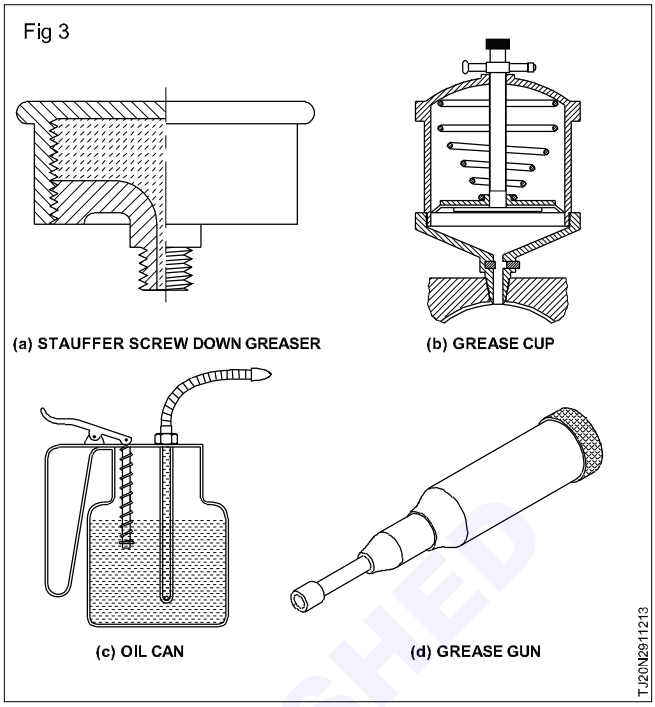

Splash method

In this method the shaft, or something attached to it, actually dips into the oil and a stream of lubricant is continually splashed round the parts requiring lubrication. This method is employed for the gears and bearings inside all gear drives, the lower parts of the gears actually dipping in the oil. (Figs 4a, b and c)

A common method of employing splash lubrication is known as ‘ring oiling.’

Fig 4

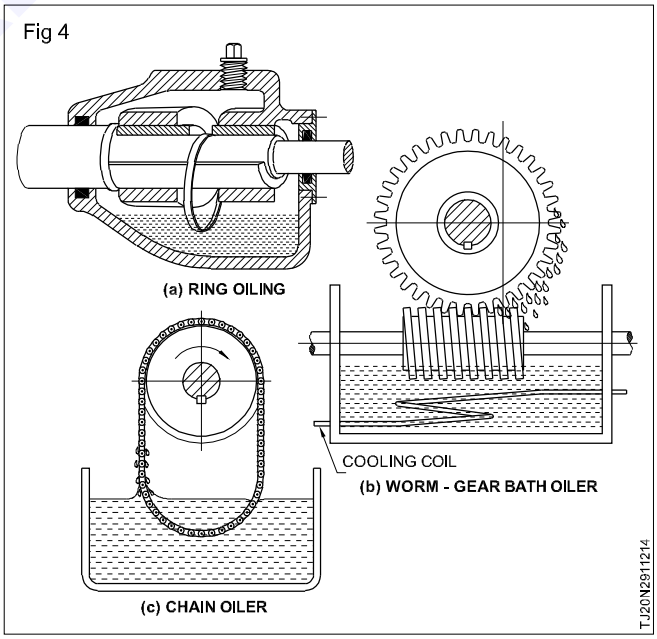

© NIMI NOT TO BE REPUBLISHED

Classification of Lubricants

Objectives: At the end of this lesson you shall be able to
- **state solid lubricants and their application**
- **state liquid and semi-liquid lubricants and their application**
- **state the classification of lubricants as per indian oil corporation.**

Lubricants are classified in many ways. According to their state, lubricants are classified as:

- solid lubricants
- semi-solid or semi-liquid lubricants
- liquid lubricants.

Solid lubricants

These are useful in reducing friction where an oil film cannot be maintained because of pressure and temperature. Graphite, molybdenum disulphide, talc, wax, soap- stone, mica and french chalk are solid lubricants.

Semi-liquid or semi-solid lubricants

Greases are semi-liquid lubricants of higher viscosity than oil. Greases are employed where slow speed of heavy pressure exists. Another type of application is for high temperature components, which would not retain liquid lubricants.

Liquid lubricants

According to the nature of their origin, liquid lubricants are classified into:

- mineral oil
- animal oil
- synthetic oil.

According to the product line of Indian Oil Corporation the lubricants are classified as:

- automotive lubricating oils
- automotive special oils
- rail-road oils
- industrial lubricating oils
- metal working oils
- industrial special oils
- industrial greases
- mineral oils.

For industrial purposes the commonly used lubricants for machine tools are:

- turbine oils
- circulating and hydraulic oils (R & O Type)
- circulating and hydraulic oils (anti-wear type)
- circulating oil (anti-wear type)
- special purpose hydraulic oil (anti-wear type)
- fire-resistant hydraulic fluid
- spindle oil
- machinery oils
- textile oils
- gear oils
- straight mineral oils
- morgan bearing oils
- compressor oils.

In each type, there are different grades of viscosity and flash point. According to the suitability, lubricants are selected using the catalogue.

Example 1

Spindle oils are graded according to their viscosity and flash point.

Servospin - 2

Servospin - 5

Servospin - 12

Servospin - 22

Servospin oils are low viscosity lubricants containing anti-wear, anti-oxidant, anti-rust and anti-foam additives. These oils are recommended for lubrication of textile and machine tool spindle bearings, timing gears, positive displacement blowers, and for tracer mechanism and hydraulic systems of certain high precision machine tools.

Example 2

Gear oils are graded according to their viscosity and flash point.

Servomesh - 68

Servomesh - 150

Servomesh - 257

Servomesh - 320

Servomesh - 460

Servomesh - 680

Servomesh oils are industrial gear oils blended with lead and sulphur compounds. These oils provide resistance to deposit formation, protect metal components against rust and corrosion, separate easily from water and are non-corrosive to ferrous and non-ferrous metals.

These oils are used for plain and anti-friction bearings subjected to shock and heavy loads, and should be used in systems where the operating temperature does not exceed 90°C. These oils are not recommended for use

© NIMI NOT TO BE REPUBLISHED

in food processing units.

Servomesh A-90 is a litumenous product which contains sulphur-lead type and anti-wear additive. It is specially suitable for lubrication of heavily loaded low-speed open gears.

Servomesh SP 68

Servomesh SP 150

Servomesh SP 220

Servomesh SP 257

Servomesh SP 320

Servomesh SP 460

Servomesh SP 680

Servomesh SP oils are extreme pressure type industrial gear oils, which contain sulphur-phosporous compounds and have better thermal stability and higher oxidation resistance compared to conventional lead-napthenate gear oils.

These oils have good de-emulsibility, low foaming tendency and provide rust and corrosion protection to metal surfaces. These oils are recommended for all heavy duty enclosed gear drives with circulation or splash lubrication system operating under heavy or shock load conditions up to a temperature of 110° C.

Lubricating Machines

Objective: At the end of this lesson you shall be able to
- **state the methods of applying a lubricant.**

There are 3 systems of lubrication.

- Gravity feed system
- Force feed system
- Splash feed system

Gravity feed

The gravity feed principle is employed in oil holes, oil cups and wick feed lubricators provided on the machines. (Figs 1 & 2)

Fig 1

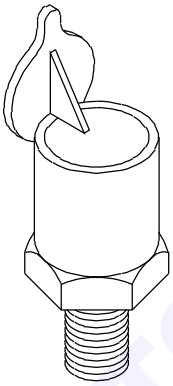

OIL CUP

T.J20N2911221

Fig 2

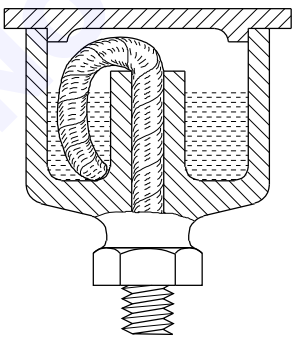

WICK FEED

T.J20N2911222

Force feed/pressure feed

Oil, grease gun and grease cups

The oil hole or grease point leading to each bearing is fitted with a nipple, and by pressing the nose of the gun against this, the lubricant is forced to the bearing. Greases are also force fed using grease cup. (Fig 3)

Oil is also pressure fed by hand pump and a charge of oil is delivered to each bearing at intervals once or twice a day by operating a lever provided with some machines. (Fig 4) This is also known as shot lubricator.

Fig 3

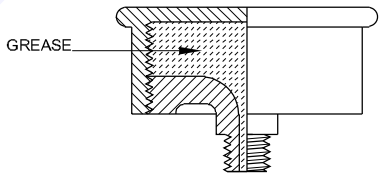

MANUAL SCREW DOWN GREASER

T.J20N2911223

Fig 4

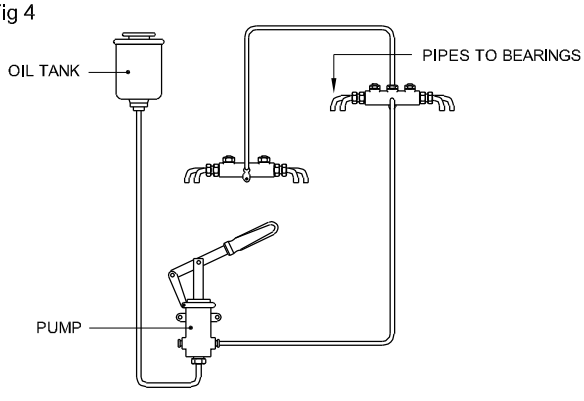

HAND PRESSURE FEED (ONE SHOT)

T.J20N2911224

Oil pump method

In this method an oil pump driven by the machine delivers oil to the bearings continuously, and the oil afterwards drains from the bearings to a sump from which it is drawn by the pump again for lubrication.

© NIMI NOT TO BE REPUBLISHED

Splash lubrication

In this method a ring oiler is attached to the shaft and it dips into the oil and a stream of lubricant continuously splashes around the parts, as the shaft rotates. The rotation of the shaft causes the ring to turn and the oil adhering to it is brought up and fed into the bearing, and the oil is then led back into the reservoir. (Fig 5) This is also known as ring oiling.

Fig 5

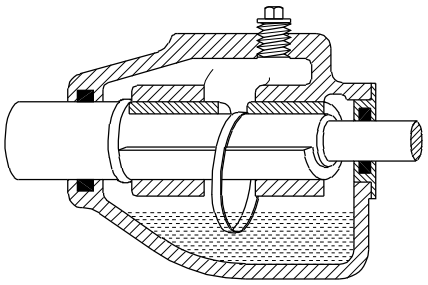

RING OILING

T.J20N2911225

In other systems one of the rotating elements comes in contact with that of the oil level and splash the whole system with lubricating oil while working. (Fig 6) Such systems can be found in the headstock of a lathe machine and oil engine cylinder.

Fig 6

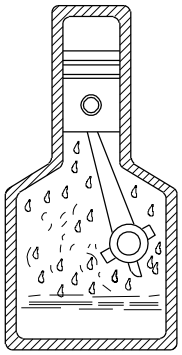

SPLASH-LUBRICATING SYSTEM

T.J20N2911226

Types of grease guns

The following types of grease guns are used for lubricating machines.

- **'T' handle pressure gun (Fig 7)**

Fig 7

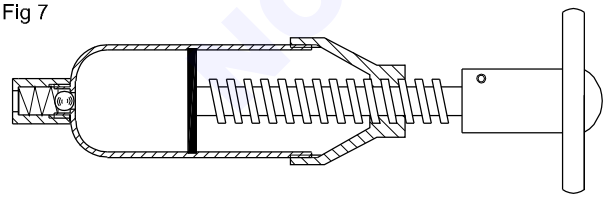

T-HANDLE PRESSURE GUN

T.J20N2911227

- **Automatic and hydraulic type pressure gun (Fig 8)**
- **Lever-type pressure gun (Fig 9)**

Fig 8

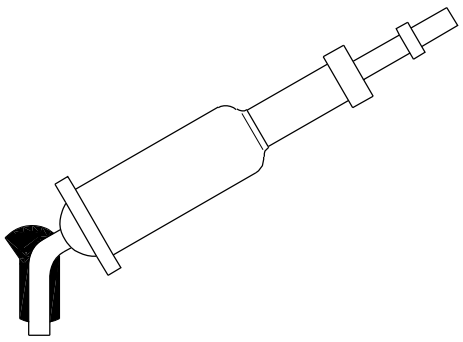

AUTOMATIC HYDRAULIC-TYPE PRESSURE GUN

T.J20N2911228

Fig 9

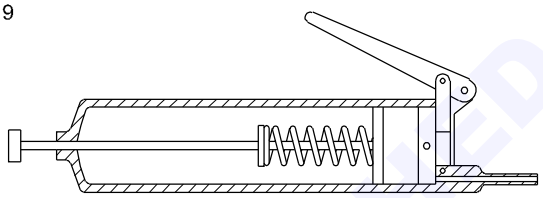

LEVER TYPE PRESSURE GREASE GUN

T.J20N2911229

Lubrication to exposed slideways

The moving parts experience some kind of resistance even when the surface of the parts seems to be very smooth.

The resistance is caused by irregulartities which cannot be detected by the naked eyes.

Without a lubricant the irregulartities grip each other as shown in the diagram. (Fig 10)

Fig 10

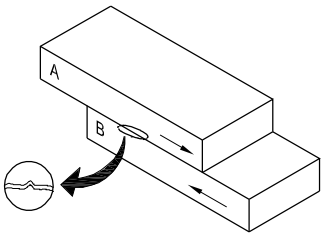

T.J20N291122A

With a lubricant the gap between the irregularities fills up and a film of lubricant is formed in between the mating components which eases the movement. (Fig 11)

Fig 11

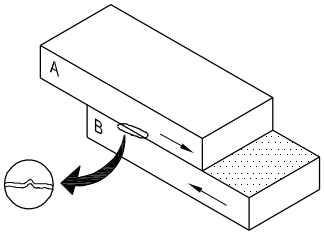

T.J20N291122B

The slideways are lubricated frequently by an oilcan. (Fig 12)

After cleaning the open gears, oil them and repeat lubrication regularly. (Fig 13)

© NIMI NOT TO BE REPUBLISHED

Fig 12

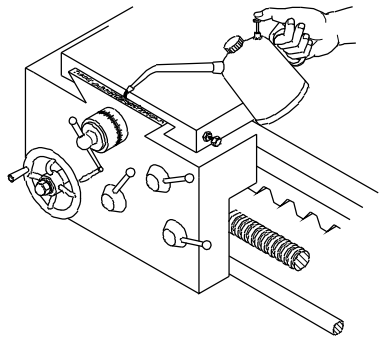

OIL THE SLIDES FREQUENTLY

TJ20N291122C

Fig 13

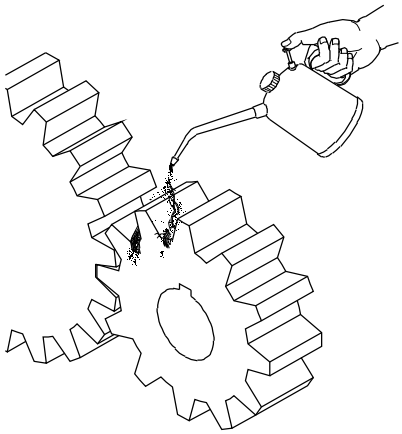

TJ20N291122D

Lubricate bearings

A shaft moving in a bearing is also subjected to frictional resistance. The shaft rotates in a bush bearing or in ball/ roller bearing, experiencing friction.

When the shaft is at rest on the bottom of the bush bearing, there is hardly any lubricant between the shaft and the bush. (Fig 14)

Fig 14

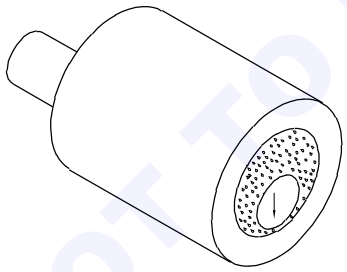

TJ20N291122E

When the shaft starts rotation the lubricant maintains a film between the shaft and the bush and an uneven ring of lubricant builds up. (Fig 15)

Fig 15

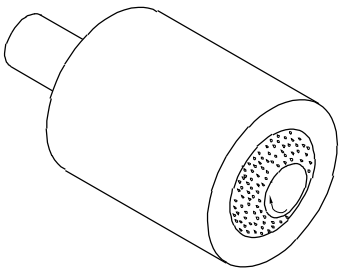

TJ20N291122F

When the shaft is rotating at full speed a full ring of lubricating film surrounds the shaft (Fig 16) which is known as hydro dynamic lubrication.

Fig 16

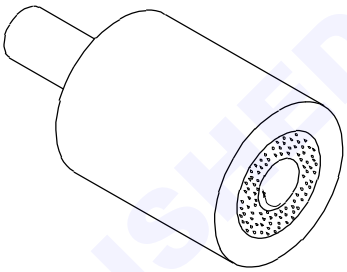

TJ20N291122G

This lubrication ring decreases the frictional resistance very much and at the same time protects the mating members against wear and changes.

Some bush bearings have oil feeding holes over which the oil or grease cup is mounted and the lubricant is fed through the holes into the bearing by gravity feed system.(Fig 17)

Fig 17

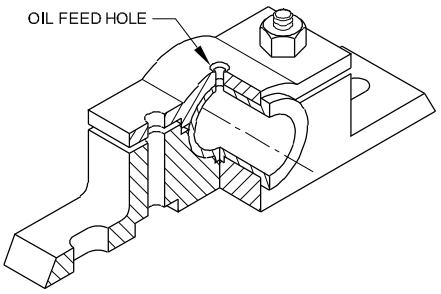

TJ20N291122H

Hints for lurbicating machines:

- Identify the oiling and greasing points
- Select the right lubricants and lubricating devices
- Apply the lubricants.

© NIMI NOT TO BE REPUBLISHED

The manufacturer's manual contains all the necessary details for lubrication of parts in machine tools. Lubricants are to be applied daily, weekly, monthly or at regular intervals at different points or parts as stipulated in the manufacturer's manual.

These places are indicated in the maintenance manuals with symbols as shown in Fig 18.

The best guarantee for good maintenance is to follow the manufacturer's directives for the use of lubricants and greases. Refer to the Indian Oil Corporation chart for guidance. The commonly used oils in the workshop is given in Annexure I.

The lubricant containers should be clearly labelled. The label must indicate the type of oil or grease and the code number and other details. Oil containers must be kept in the horizontal position while the grease container should be in the vertical position.

Fig 18

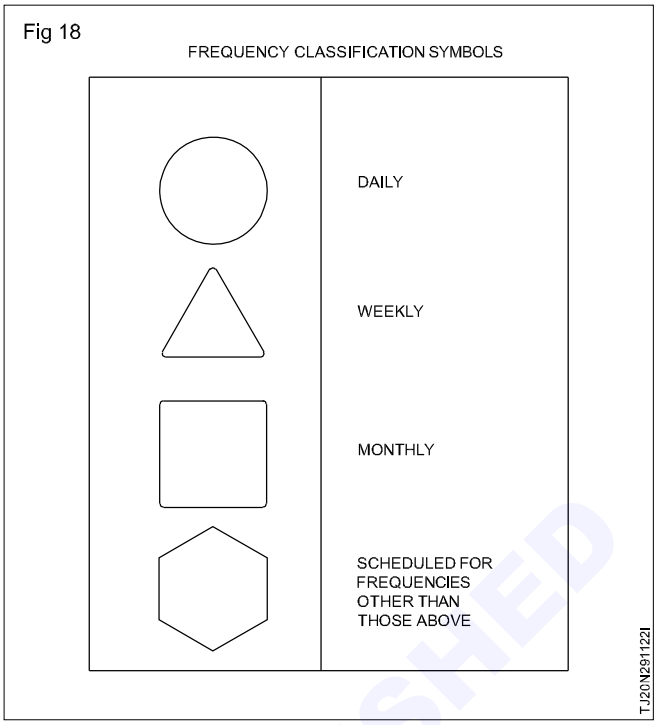

Industrial lubricating oils Annexure 1

Product	Kinematic viscosity Cst at 40°C.	VI	Flash point COC°C	Description/Application
General Purpose Machinery Oils				
Lubrex 57	54.60	..	160	Lubrex oils are low viscosity index straight mineral lubricants having good inherent oxidation stability; they protect machine elements from excessive wear and provide economical lubrication. These oils are recommended for lubrication of bearings, open gears, lightly loaded slides and guideways of machine tools.
Lubrex 68	64.72	..	160	
Flushing Oil				
Lubrex Flush 22	19.22	..	150	Lubrex Flush 22 is a light coloured, low viscosity, straight mineral oil specially developed for slushing of automotive and industrial equipment. The characteristics of Lubrex Flush 22 make it possible to easily clean all inacessible internal surfaces of various equipments.
Circulating and Hydraulics Oils (Anti-wear Type)				
Servosystem 32	29.33	95	196	Servosystem oils are blended from highly refined base stocks and carefully selected anti - oxidant, anti-wear,anti-rust and anti-foam additives.These oils have long service life, and are recommended for hydraulic systems and a wid of circulation systems of industrial and automotive equipment. These oils are also used for compressor crank case lubrication, but are not recommended for lubrication of turbines and equipment having silver coated components.
Servosystem 57	55.60	95	210	
Servosystem 68	64.72	95	210	
Servosystem 81	78-86	90	210	
Servosystem 100	95-105	90	210	
Servosystem 150	145-155	90	230	

© NIMI NOT TO BE REPUBLISHED

Product	Kinematic viscosity Cst at 40°C.	VI	Flash point COC°C	Description/Application
Spindle Oils				
Servospin 2	2.0-2.4	..	70	Servospin oils are low viscosity lubricants containing anti-wear, anti-oxidant, anti-rust and anti-foam additives. These oils are recommended for lubrication of textile and machine tool spindle bearings, timing gears, positive displacement blowers, and for tracer mechanism and hydraulic systems of certain high precision machine tools.
Servospin 5	4.5-5.0	..	70	
Servospin 12	11-14	90	144	
Machinery Oils				
Servoline 32	29.33	..	152	Servoline oils provide good oiliness for general lubrication even under boundary lubrication conditions,protect parts against rust and anti-rust additives. Servoline oils are general purpose lubricants for all loss lubrication systems of textile mills, paper mills, machine tools.
Servoline 46	42.50	..	164	
Servoline 46	42.50	..	164	
Servoline 68	64-72	..	176	
Gear Oils				
Servomesh 68	64-72	90	204	Servomesh oils are industrial gear oils blended with lead and sulphur compounds. These oils provide resistance to deposit formation, protect metal components against rust and corrosion, separate easily from water and are non-corrosive to ferrous and non-ferrous metals. Servomesh oils are recommended for lubrication of industrial gears, plain and anti- friction bearings subjected to shock and heavy loads and should be used in systems were operating temperature does not exceed 90°C. These oils are not recommended for use in food processing units.
Servomesh 150	145-155	90	204	
Servomesh 257	250-280	90	232	

© NIMI NOT TO BE REPUBLISHED

Automatic Lubrication System

Objectives : At the end of this lesson you shall be able to
- **state what is automatic lubricating system**
- **list the different types of automatic lubricating system**
- **brief the various types of automatic lubricating syatem.**

An Automatic Lubrication System, sometimes referred to as a Centralized Lubrication System, is a system that delivers controlled amounts of lubricant to multiple locations on a machine while the machine is operating.

There are several different types of automatic lubrication systems including:

- Single Line Parallel systems.
- Dual Line Parallel systems.
- Single Point Automatics.
- Single Line Progressive systems (or Series Progressive)
- Single Line Resistance.
- Oil Mist and Air-Oil systems.
- Oil re-circulating.
- Chain lube systems.

The 4 most commonly used Automatic Lubrication System types are:

- Single Line Parallel,
- Dual Line Parallel and
- Single Line Progressive.
- Multi port direct lubricators

Single line progressive (Fig 1)

Fig 1

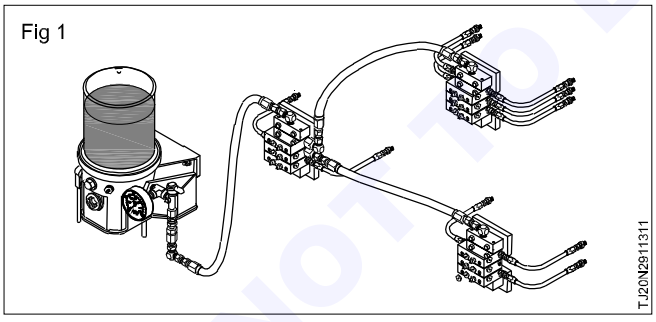

Single Line Progressive Automatic Lubrication System.

A single line progressive system uses lubricant flow to cycle individual metering valves and valve assemblies. The valves consist of dispensing pistons moving back and forth in a specific bore. Each piston depends on flow from the previous piston to shift and displace lubricant. If one piston doesn't shift, none of the following pistons will shift. Valve output is not adjustable.

Operation begins when the controller/timer sends a signal to the pump to start the lube event. The pump then feeds lubricant into the supply line which connects to the primary metering valve, for either a preprogrammed amount of time or number of times as monitored through a designated piston cycle switch. Lubricant is fed to the multiple lubrication points one after another via secondary progressive metering valves sized for each series of lubrication points, and then directly to each point via the feed lines.

Single line parallel (Fig 2)

Fig 2

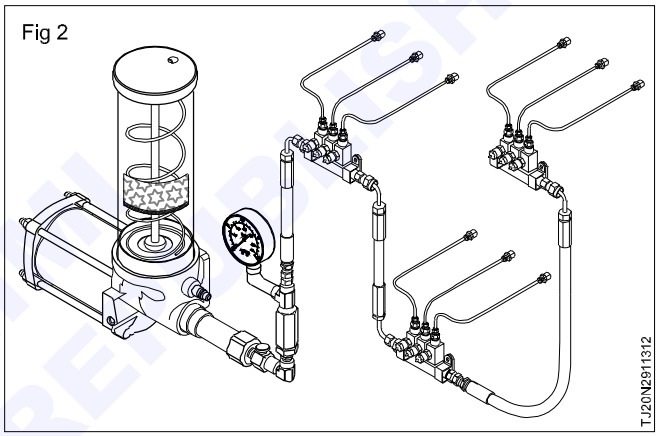

Single Line Parallel Automatic Lubrication System.

A single line parallel system can service a single machine, different zones on a single machine or even several separate machines and is ideal when the volume of lubricant varies for each point. In this type of system, a central pump station automatically delivers lubricant through a single supply line to multiple branches of injectors. Each injector serves a single lubrication point, operates independently and may be individually adjusted to deliver the desired amount of lubricant.

Operation begins when the controller/timer sends a signal to the pump starting the lube cycle. The pump begins pumping lubricant to build up pressure in the supply line connecting the pump to the injectors. Once the required pressure is reached, the lube injectors dispense a predetermined amount of lubricant to the lubrication points via feed lines.

Once the entire system reaches the required pressure, a pressure switch sends a signal to the controller indicating that grease has cycled through to all the distribution points. The pump shuts off. Pressure is vented out of the system and grease in the line is redirected back to the pump reservoir, until the normal system pressure level is restored.

© NIMI NOT TO BE REPUBLISHED

Dual line parallel (Fig 3)

Dual Line Parallel Automatic Lubrication System.

A dual line parallel system is similar to the single line parallel system in that it uses hydraulic pressure to cycle adjustable valves to dispense measured shots of lubricant. It has 2 main supply lines which are alternatively used as pressure / vent lines. The advantage of a two-line system is that it can handle hundreds of lubrication points from a single pump station over several thousand feet using significantly smaller tubing or pipe.

Operation begins when the controller/timer sends a signal to the pump to start the lubrication cycle. The pump begins pumping lubricant to build up pressure in the first (the pressure) supply line while simultaneously venting the second (vent) return line. Once the required pressure is reached, a predetermined amount of lubricant is dispensed by the metering devices to half of the lubrication points via feed lines.

Once the pressure switch monitoring main supply line pressure indicates a preset pressure in the line has been reached, the system is hydraulically closed. The controller shuts off the pump and signals a changeover valve to redirect lubricant to the second main supply line.

The next time the controller activates the system, the second main line now becomes the pressure line while the first line becomes the vent line. The second line is pressurized and the entire process is repeated lubricating the remaining lube points.

Multi point direct lubricator

When the controller in the pump or external controller activates the drive motor, a set of cams turns and activates individual injectors or pump elements to dispense a fixed amount of lubricant to each individual lubrication point. Systems are easy to design, direct pump to lube point without added accessories and easy to troubleshoot.

Fig 3

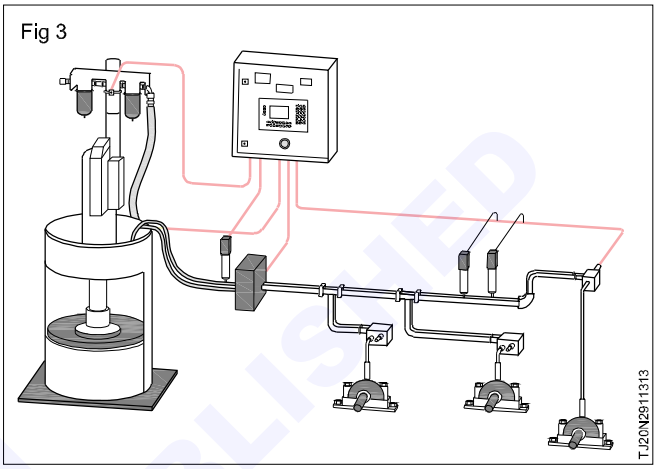

© NIMI NOT TO BE REPUBLISHED

Maintenance and its Types

Objectives : At the end of this lesson you shall be able to
- **state what is maintenance**
- **list the types of maintenance**
- **brief the each types of maintenance.**

Maintenance

Maintenance is a combination of any actions carried out to retain an item in, or restore it to an acceptable condition.

Types of Maintenance

Breakdown Maintenance

In breakdown maintenance the equipment is usually attended to only after it breaks down. Despite its numerous disadvantages this type of system may be suitable in certain conditions such as the equipment is non critical and standbys are available or the plant capacity exceeds market demand.

Preventive maintenance

Organising maintenance before the needs being developed would minimize the possibility of anticipated break downs.

Scheduled Maintenance

Analysis of routine maintenance like cleaning greasing etc. which will keep equipments running efficiently and in a state of reliable operational readiness.

Reconditioning

At periodic intervals, depending on type and nature of the machine or equipment and its condition, it needs to be overhauled or reconditioned. It is the process of bringing the machine back to its new conditions.

Corrective Maintenance

A study of failure of equipment in service may warrant a change in design; materials or working conditions of the equipment and corrective steps should be taken thereafter.

Maintenance Prevention

While designing and developing the equipment objective is set to provide no maintenance or higher maintainability which would reduce the maintenance effort in the life time.

Predictive Maintenance

While the equipment is in actual operating condition a study of performance of the equipment would reveal whether unexpected deterioration is taking place in it and the range of frequency of scheduled maintenance to reduce such deterioration.

Condition Based Maintenance

In this system of maintenance, the machine is continually monitored to see the health of machine derived from different electrical instrument, in the form of mechanical vibration, noise, sound, thermal emissions, change in chemical composition, small pressure and relative displacement and so on. From this result the severity of faults can be evaluated for decision making.

Pro-active Maintenance

The most recent innovation in maintenance is called Pro- active Maintenance.

It includes a technique called “root causes failure analysis” in which the primary cause of the machine failure is sought and corrected.

The root causes of the majority of machine faults are imbalance and misalignment. Both of these condition place undue force on bearing, shortening their service life. Rather than continual replacing worn bearing, a far better policy is, to perform precision balance and alignment on the machine and to verify the result by vibration analysis.

Total Productive Maintenance (TPM)

To improve the company, the attitudes and skills of all the personnel’s from top management down to shop floor workers, the idea that, “I am the operator and you’re the maintenance man” was deep rooted and the operator had no interest in maintenance.

Changing this idea on the part of all the employees and so the operator autonomously maintains the equipment he use by himself is the first step in TPM.

TPM takes on the challenge of,

- Zero Losses
- Zero Failures
- Zero Defects

© NIMI NOT TO BE REPUBLISHED

System of Symbol and Colour Coding for Lubricants

Objectives : At the end of this lesson you shall be able to
- **state the necessity of the colour coding system for lubricants**
- **list the points that helps the management by colour coding**
- **brief the colour and shapes in colour coding.**

A color code or colour code is a system for displaying information by using different colors. The earliest examples of color codes in use are for long distance communication by use of flags, as in semaphore communication.... On forms and signage, the use of colour can distract from black and white text.

The Ease and Simplicity of Color-Coded Lubrication Management.

The idea behind color-coded lubrication management is simple: Everything that comes into contact with lubricant during the maintenance process is marked with a color and symbol that correspond to a particular lubricant. This means all the drums, dispensers, transfer containers, and fill points in a color-coded system have colored tags-or labels of some kind. Workers can easily see which items are to be used with which lubricant and where each lubricant should be applied. Following the path of any given lubricant from storage to application is as easy as connecting the dots — or colored symbols.

Color-coded lubrication management helps you do the following;

1 Prevent Lubricant Misapplication
2 Eliminate Cross-Contamination
3 Foster Workplace Safety
4 Safeguard Your Workflow

The colour of lubricating oils can range from transparent to opaque. The color is based on the crude from which it is made, its viscosity, method and degree of treatment during refining, and the amount and types of additives included.

In addition, each viscosity grade has its own colour that can be standardized throughout the plant. For oils, the LIS tag is square-shaped, while for greases the tag is round.

Example of the colour coding system is shown in table 1.

However

A circle to represent the need for daily lubrication,

A triangle for weekly lubrication, and

A square to represent monthly intervals between lubrication activities.

For activities conducted on a quarterly basis (or over longer periods), the square was to again be used, but this time with a number painted inside the square to highlight the number of interval months.

Table 1

Lubricant storage and transfer systems, though, reflect just one area where colorization pays off for a site. Another important use of color identification involves a condition-based approach to filling oil reservoirs.

SYMBOL	COLOR	LUBRICANT DESCRIPTION
	RED	OIL,GEAR,MINERALS,ISO 220,XYZ COMPANY, GEARLUBE-2000
	BLUE	OIL,HYDRAULIC,ISO 68,XYZ COMPANY, HYDROBLUE
	GREEN	GREASE,LITHIUM,EP2,XYZ COMPANY, CRASSO 2
	PURPLE	GREASE,LITHIUM,EP1,XYZ, CRASSO 1
THIS CHART IS AN EXAMPLE OF THE COLOR AND SYMBOLISM USED IN TODAY'S TRANSFER AND APPLICATION OF LUBRICANTS.		

Color-coding is used on this condition-based Hi-Lo lubricant-reservoir-fill application. (Fig 1)

Fig 1

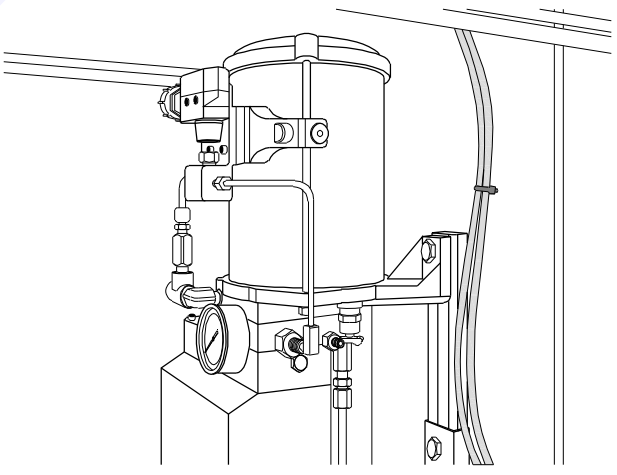

Figure 1 is a good example of this Hi-Lo technique. It involves using red, amber (yellow), and green lines taped on the side of an automated-lubrication-system reservoir. This arrangement is known as a RAG (red/amber/geen), or the traffic-light indicator system:

- The green line indicates the upper fill level.
- The amber (yellow) line indicates a level at which the operator is to contact the maintenance department with a first request to fill the reservoir.
- The red line alerts the operator to call in a priority request to fill the reservoir.

© NIMI NOT TO BE REPUBLISHED

Possible Causes for Failure and Remedies

Objectives : At the end of this lesson you shall be able to
- **list out the various causes for failures in machines**
- **suggest the remedial measure to overcome the failures.**

Possible causes for Failure and Remedies

A machine tool is considered to have failed or impaired under one of the three conditions when:

- It becomes completely in-operatable.
- It is still operatable but is no longer able to perform its intended function satisfactorily.
- Serious deterioration has made it unreliable or unsafe for continued use.

The fundamental causes of failure include many aspects of which the following are of prime importance if design,and manufacturing aspects have attained desired standard.

- Improper installation.
- Improper assembly and misalignment.
- Improper lubrication.
- Overloading and mishandling.
- Excessive temperature generation.
- Improper service condition.

Improper Installation

Proper functioning of machine tool is very much depending upon its foundation. It should be such that the dead load of the machine is evenly supported and the alignments are maintained. To achieve this, proper foundation must be made and leveling of the machine tool is done after installation. Improper foundation causes uneven stress development in the machine body which leads to vibration, misalignment and in accuracy in its output. Vibration will cause false brinelling failure in ball bearing.

Improper assembly and misalignment

Failure also causes due to error in assembly and misalignment. Faulty bearing assembly can lead to bearing failure. Skew running marks in the outer face is caused due to misalignment. Fatigue failure is caused due to misalignment. Misalignment of plain bearing housing on assembly leads to bearing failure. Excessive interference fit cause overheating and fatigue in bearing.

Improper lubrication

Failure due to improper lubrication can be caused by:

- Improper selection of lubricant.
- Inadequate lubrication.
- In correct lubricating intervals.
- Sub - standard lubricant.

Such failures often can be attributed to improper bearing etc, besides the above causes.

Proper grade of lubricant as recommended by the manufacturer of machine tool to be used in between the mating components to minimize friction and wear. If machine manual is not available, suitable lubricant is to be selected considering the load, speed, temperature generation and the type of bearing. This calls for considerable experience in the field.

Sub - standard lubricant likely to cause increased rate of wear including corrosive wear, so genuine lubricant of proper grade is of great importance for lubrication.

Overloading and mishandling

Overloading is generally caused due to the following reasons.

- Increased depth of cut.
- More speed and feed considering the metal to be cut.
- Sudden shock load.
- Improper handling of machine tool.

Excessive Temperature Generation

Stress development at elevated temperature produces continuous strain on the components. This results in creep and eventually leads to fracture, depending upon the type of metal. Besides, high temperature generation bring about quality deterioration in lubricant which helps in premature bearing failure. Principle types of elevated temperature failures are;

- Creep and stress rupture.
- Thermal fatigue.
- Tension over load.

Due to temperature generation, components expand and this expansion varies as per the metal. The expansion provisions must be kept in shaft and bearing assembly, otherwise this will lead to failure of parts.

Improper Service Condition

Improper environmental condition such as dust prone areas, toxic fumes and chemicals causes failure to mechanisms.

Antifriction bearings fail very easily if abrasive particles enter into it. In hostile environmental condition schedule maintenance and inspection should be carried out regularly to avoid premature failure.

© NIMI NOT TO BE REPUBLISHED

Check Points

Checkpoints for nuts & Bolts

Slight defects	Loose nuts & bolts, missing nuts & bolts
Bolt length	All bolts should protrude from nuts by 2 -3 threads
Washers	• Are flat washers used on long holes • Are tapered washes used on angle bars & channels • Are spring washers used for parts subjected to vibration • Are identical washers used in identical parts
Fixing of nuts & bolts	• Are bolts inserted from below, are they visible from outside • Are devices such as limit switches fastened at least by 2 bolts • Are wing nut directions clockwise

Lubrication Checkpoints

Lubricant Storage	• Are lubricant stores always kept clean, tidy, are 5S principles applied? • Are lubricant containers always capped? • Are lubricant type clearly indicated and is under proper stock control practices?
Lubricant inlets	• Are grease nipples, speed reducer lubricant ports and other lubricant inlets always kept clean? • Are lubricant inlets dust proofed? • Are lubricant inlets labeled with correct type and quantity of lub?
Oil Level gauges	• Are oil level gauges always kept clean, are oil levels easy to check? • Is the correct oil level clearly marked? • Is equipment free of oil leaks, and oil pipes and breathers unobstructed?
Auto Lub Devices	• Are Auto lubricating devices operating correctly & supplying correct quantity of lubricants?
Lubricating condition	• Are rotating, sliding parts, and transmission well lubricated? • Are the surroundings free of contamination by excess lubricant?

Transmission System Checkpoints

V — Belts & Pulleys	• Are any belt cracked, swollen, worn out, or contaminate by lubrication? • Are any belts twisted or missing. Are any belts stretched or slack? • Are multiple belts under uniform tension and call of the same type? • Are top surfaces of belts protruding above the pulley rims? Are the bottoms any pulley grooves shiny ?(indicating a worn belt or pulley) • Are pulleys correctly aligned?

© NIMI NOT TO BE REPUBLISHED

Check Points

Checkpoints for nuts & Bolts

Roller chains	• Are any chains stretched indicating worn out pins of bushings? • Are any sprocket teeth worn, missing or damaged? • Is lubrication between pints and bushings sufficient? • Are sprockets correctly aligned?
Shafts, bearings & Couplings	• Is there any overheating, vibration, abnormal noise due to excessive play, or lack of greasing? Are any keys or set bolts loose or missing? • Are any couplings misaligned or wobbling? Are any seals worn out?
Gears	• Are gears rightly lubricated with proper amount of lubricant? • Are any teeth missing, damaged worn out or jammed? • Is there any unusual noise or vibration?

Hydraulic Check Points

Hydraulic Check Points	• Is there correct quantity & Level indicated for, fluid in the reservoir? • Is fluid of correct Temp and is minimum and maximum for temperature indicated? • Is fluid cloudy (indicating air entrapment) • Are all fluids inlets & strainers clean, are any suction filters blocked? • Are any fluid reservoir breather filters blocked? • Are fluid pumps operating without any unusual noise or vibration? • Is hydraulic pressure correct, and are operating ranges displayed?
Heat exchangers	• Is any fluid for water leaking from fluid coolers or pipes? • Are temperature differences between fluid & water inlets & outlets are correct? Are any tubes blocked?
Hydraulic Equipment	• Are there any fluid leaks? Are hydraulic devices properly fastened? • Are hydraulic devices operating correctly without speed loss or breathing? Is hydraulic pressure correct, and all gauges working.
Piping and Wiring	• Are all pipes and hoses fastened tightly? • Are there any fluid leaks? Are any hoses cracked or damaged? • Are all valves operating correctly? Is it easy to see whether valves are open or closed / Are any pipes, valves, unnecessary?

Pneumatic Checkpoints

FRLs	• Are FRLs clean? Is it easy to see inside of them? Are they fitted right way around? • Is there sufficient oil, and are the drains are clear?

© NIMI NOT TO BE REPUBLISHED

Check Points

Checkpoints for nuts & Bolts

	• Is there oil dip rate correct? (approx 1 drop for every 10 strokes) • Are the FRLs installed not more than 3m from the equipment? • Are the pressure adjusted to the correct value and operating ranges are indicated?
Pneumatic Equipment	• Is compressed air leaking from pneumatic cylinders or solenoids? • Are all pneumatic cylinders and solenoid valves firmly fastened? • Are any pistons dirty, worn and damaged? • Are the speed controllers installed right Ways around? • Is there any abnormal sound or overheating of solenoid valves and are any lead wires chafted or trailing?
Piping and Wiring	• Are there any places in pneumatic pipes or hoses where fluid is liable to collect? Are all hoses and pipes clipped firmly in place? • Are any hoses cracked, damaged, are there any air leaks? • Are valves operating correctly and open and close position known?

Electrical Checkpoints

Control Panels	• Are the interiors of distribution boards, switch boards and control panels kept clean, tidy and well organized by the application of 5S activities? Have any objection or flammable materials been left inside? • Is the wiring inside control panels in good condition? Are any wires coiled or training? • Are all ammeters and voltmeters operating correctly? • Are any switches, bulbs broken? Do all switches work correctly? • Are panel doors in good condition? Do they open & close easily? • Are they any unused holes? Are control panels water & dustproof?
Electrical Equipment	• Are all motors free of overheating, vibration, unusual noise & smell? • Are all motor cooling fans and fins are clean? • Are any bolts loose? Are pedestals free of cracks and damaged?
Sensors	• Are all manual switches clean and free of damages & excessive play? • Are all switches installed in the correct position? • Are the interiors of limit switches is clean? Are any wires coiled or trailing? • Are any limit switch dogs worn, deformed, or of the wrong shape? • Are all photoelectric switches and proximity switches clean and free of excessive play? • Are any sensors out of position? Are correct positions clearly indicated?

© NIMI NOT TO BE REPUBLISHED

Check Points

Checkpoints for nuts & Bolts

Switches	• Are all lead wires unchafed, and is insulation intact at entry points? • Are all switches installed in the correct position? • Are all manual switches clean and free of damages & excessive play? • Are emergency stop switches installed in the appropriate locations and are they in good working condition?
Piping and Wring	• Are any pipes, wires or power leads loose or unsecured? • Are any ground wires damaged or disconnected? • Are any pipes damaged or corroded? Are there any bare wires or wires with damaged insulation? • Are any wires coiled on the floor or dangling overhead?

© NIMI NOT TO BE REPUBLISHED

Forming

Objectives : At the end of this lesson you shall be able to
- **describe embossing**
- **describe coining**
- **describe flanging**
- **describe planishing**
- **determine the diameter of hole to be pierced for flanging**
- **determine the height of the flange.**

Embossing: Embossing is a shallow forming operation. The component material is stretched over a die and made to conform to the die surface by a punch. (Fig 1)

Fig 1

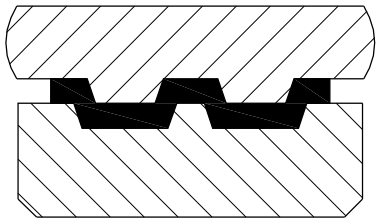

EMBOSSING DIE

T.J20N21011711

The finished product will have a depressed detail on one side and raised detail on the other. The major difference between embossing and forming is that the displaced pattern is much smaller and shallower in embossing.

An embossed pattern may have more intricate detail than a formal pattern.

Embossing is done to

1 stiffen and strengthen a sheet metal part.

2 impart a raised or depressed design on the surface of the part.

The circular grooves on the bottom of a sheet metal container is an example of embossing for stiffness and strength. (Figs 2 & 3)

Fig 2

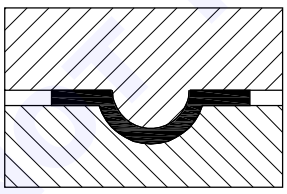

T.J20N21011712

Fig 3

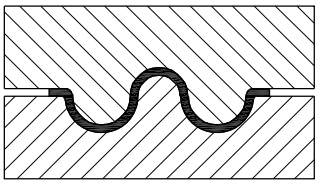

T.J20N21011713

Coining: In coining the material is pressed in a die, so that it flows into the detail on the die face. Coining differs from embossing. In coining the metal flows whereas in embossing the metal does not change in thickness to a great extent. In coining ornate details can be reproduced with excellent surface finish.

Tolerance can be held to very closer values. The force required for the coining operations is high. (Fig 4)

Fig 4

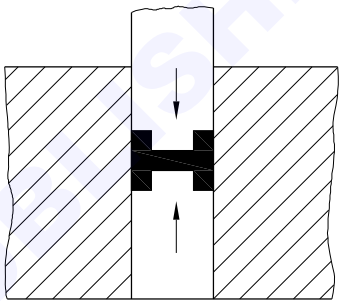

COINING DIE

T.J20N21011714

Curling: A curling tool rolls a raw edge of sheet metal into a roll or curl.

The purpose is to strengthen the raw edge and provide a protective surface and to improve the appearance of the product. The curl is often made over a wire ring for increased strength. (Fig 5)

Fig 5

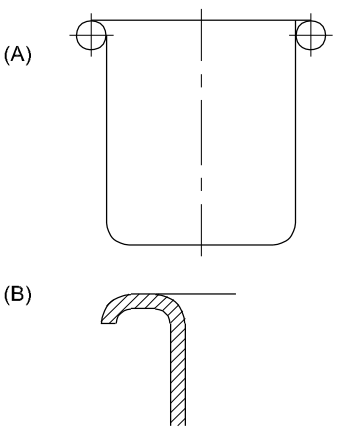

T.J20N21011715

The size of the curling groove in the die is the same as the curl diameter on the part. The size of the curl is determined by the metal thickness. Generally the minimum diameter should not be less than four times the metal thickness. Tools used for makig hinges fall under this category.

Whenever curling is done the tubular profile will not resemble a true circle. To achieve a rear circular profile a

© NIMI NOT TO BE REPUBLISHED

tilting operation is done prior to curling operation. In tilting operation the edge of the component is tilted slightly to the required radius of the curling diameter so that during curling it acts as a flow guide. (Fig 5B)

Flanging or collar drawing: Many sheet metal assembly components require threaded holes so that they can be fastened with other elements of the assembly.

If the sheet thickness is less it will not be possible to have sufficient number of threads.

Flanging or collar drawing is a process in which a collar is formed so that more number of threads can be provided. The collar well can also be used for as rivet when two sheets are to be fastened together. (Fig 6)

Fig 6

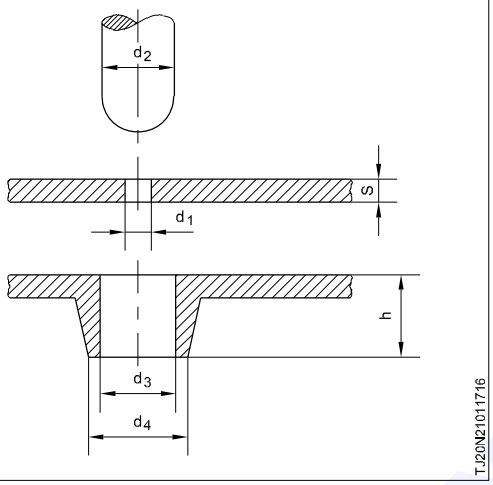

Calculations

d1 = diameter of pierced hole

d2 = core diameter of thread

d3 = size of thread

d4 = outside diameter of collar

h = height of collar

diameter of pierced hole = 0.45 x d2

d4 = d2 + 1.3s

h = 0.5d2 + s

s = sheet thickness.

Planishing: Certain parts of mechanical clocks, electronic equipments and cameras require absolute flatness. In such occasions planishing is done.

In planishing fine impressions arranged in symmetric pattern are induced on the face of a component.

The impressions are induced on one face if the thickness of the component is less (between 0.3 to 0.6 mm). But for thicker components the impressions can be made on either sides. The planishing tool consists of a punch and a die. On the die face fine serrations in the form of diamond shape are milled. The depth of each serration will not be more than 0.2mm. The punch is a flat steel piece without any impressions. When the impressions penetrate into the component face, breaks the fibre into short length, thus inducing a permanent set to the component. (Fig 7)

Fig 7

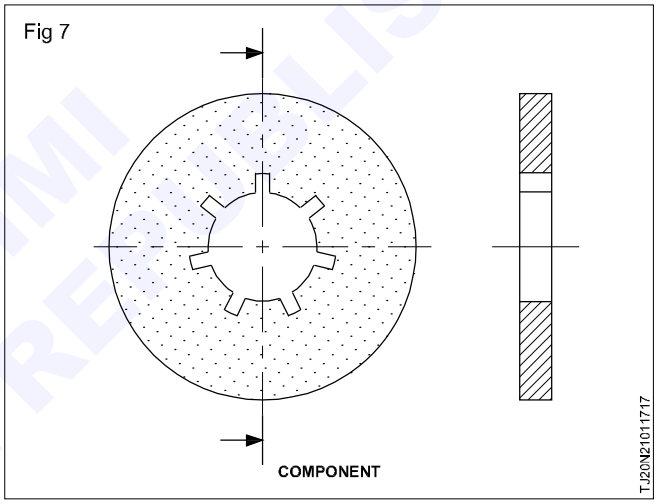

Draw Tool

Objective: At the end of this lesson you shall be able to
- **describe a simple draw tool.**

Draw tool (Fig 1)

Draw tool consists of

1 Top plate
2 Bottom plate
3 Punch holder
4 Blank holder
5 Ejector
6 Nest pin
7 Drawing die
8 Drawing punch
9 Thrust plate
10 Pur spring
11 Guide bush
12 Guide pillar
13 Compression spring
14 Shank
15 Setting bush.

Top plate: The drawing punch is fitted to the top plate. The top plate holds the shank and the bushes. This plate is usually kept soft. (Fig 2)

Bottom plate: It is the plate to which the pillar and drawing dies are fitted. (Fig 3)

© NIMI NOT TO BE REPUBLISHED

Fig 1

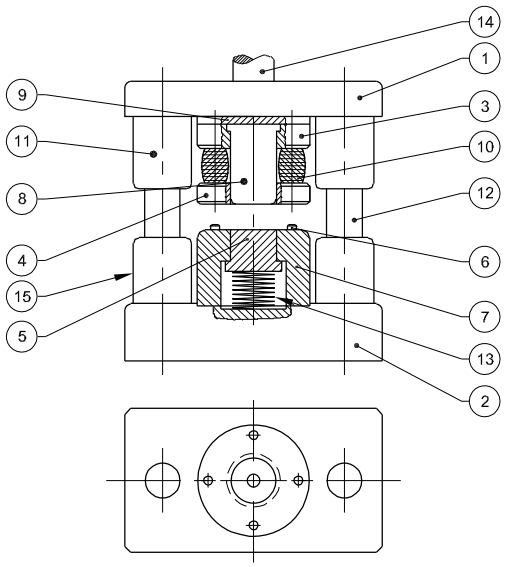

T.J20N21011721

Fig 2

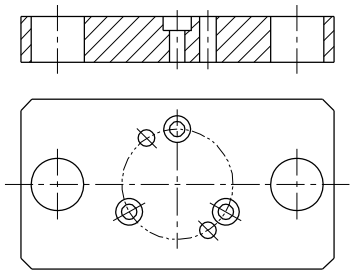

TOP PLATE

T.J20N21011722

Fig 3

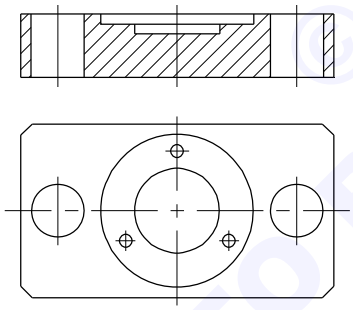

BOTTOM PLATE

T.J20N21011723

Punch holder: This is the element which holds the punch. It is usually made of mild steel. This punch holder is located and clamped on to the top plate. (Fig 4)

Fig 4

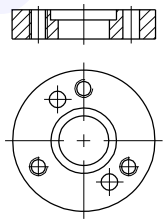

PUNCH HOLDER

T.J20N21011724

Blank holder: The purpose of blank holder is to hold the blank firmly during the drawing operation to avoid wrinkles on the component. (Fig 5)

Fig 5

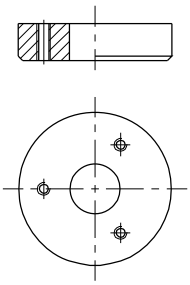

BLANK HOLDER

T.J20N21011725

Ejector: Its function is to eject the component out of the draw die. This plate is connected to the die cushion of the press or spring loaded plate. (Fig 6)

Fig 6

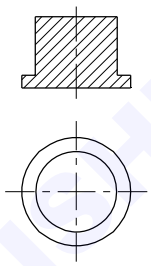

EJECTOR

T.J20N21011726

Drawing punch and dies: These are the drawing elements of the tool. These are made of High carbon steel and hardened and tempered (57-58 HRC). (Fig 7)

Fig 7

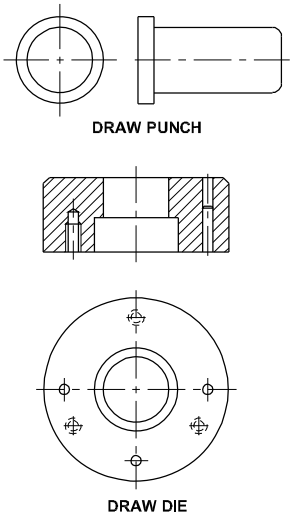

DRAW PUNCH

DRAW DIE

T.J20N21011727

Thrust plate: During the drawing operation the drawing punch tends to dig into the top plate. To prevent this a hardened plate or thrust plate is placed between the punch and the top plate. (Fig 8)

Fig 8

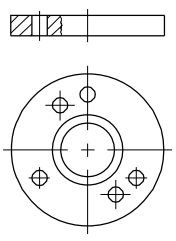

THRUST PLATE

T.J20N21011728

© NIMI NOT TO BE REPUBLISHED

Setting bush: It is a bush used to set the maximum travel of the top plate or the draw punch into the die. (Fig 9)

Fig 9

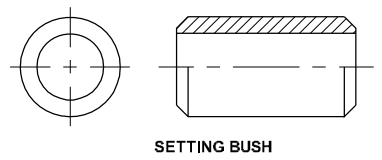

SETTING BUSH

T.J20N21011729

Deep Drawing

Objectives: At the end of this lesson you shall be able to
- **describe deep drawing**
- **describe the process of drawing cylindrical cups**
- **list out the forces acting on the blank during drawing**
- **differentiate between wrinkling and puckering.**

Deep Drawing: Deep drawing is a process of cold forming a flat precut blank into a hallow vessel. Various forms can be produced. (Fig 1) eg:

Fig 1

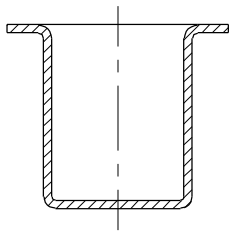

T.J20N21011731

1 Cylindrical

2 Box shaped with straight or tapered sides

3 Combination of straight tapered and curved sides.

The drawn component should not have wrinkles, fracture or excessive thinning of the sheet metal used.

Deep drawing of cylindrical cups: When the punch of a drawing tool forces the metal blank through the draw die different forces come into action on the blank. These forces cause a complicated plastic flow of the material. The volume and thickness of the metal remain almost constant. (Fig 2)

The final shape of the cup will be similar to the contour of the punch. The relationship between the diameters and depth of drawn shells vary widely. This relationship is an improtant factor in the design of draw tools. If the drawing ratio exceeds a certain limit the material will fail due to excessive stress. Then it will be necessary to draw the component in two or more stages. This increases the tool cost.

To reduce the number of draws the following methods can be employed:

1 Use of special sheets.

2 Annealing the work piece (annealing permits greater drawing ratio and consequently less number of stages).

A very simple draw tool is shown in the figure. The blank to be drawn is cut and placed in positions. Punch decends and forces the flat blank through the die opening. The blank is formed into a cup. This form of tool is known as push through tool. (Fig 3B) It is in expensive when compared with other designs. It is adopted when the drawn component shape is simpler and the material is thick. Generally draw tools are equipped with blank holders (pressure pads). The advantage of using a blank holder is that when the blank is being drawn it is clamped between the top surface of the die and the bottom surface of the blank holder. This avoids the formation of wrinkles.

Fig 2

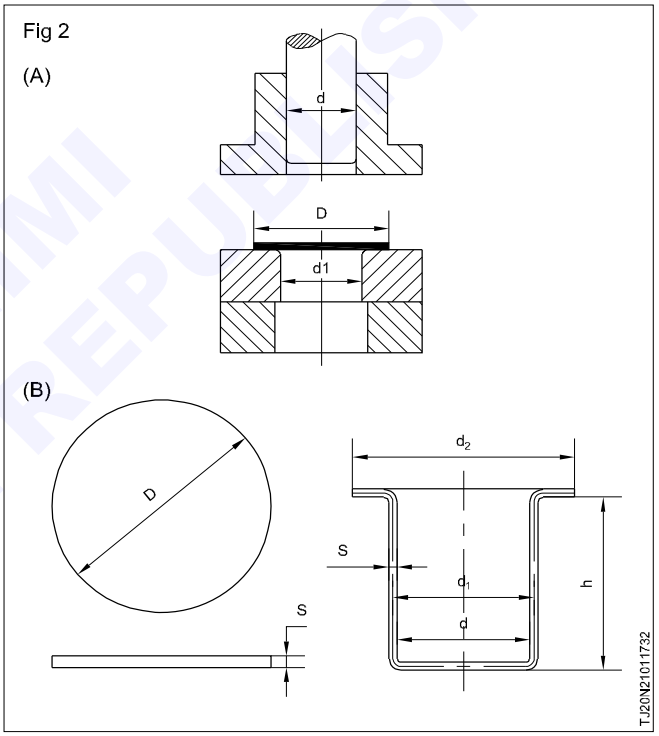

T.J20N21011732

Fig 3

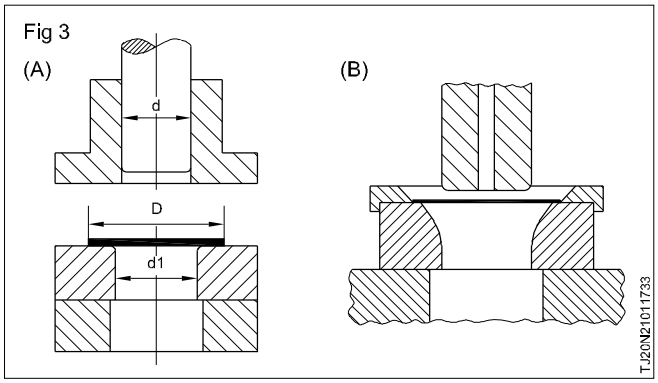

T.J20N21011733

The drawing operation is performed as shown in figures:

1 The blank (dia D) is loaded on the drawing tool. (Fig 3A)

© NIMI NOT TO BE REPUBLISHED

2 The pressure pad moves down and clamps the blank. (Fig 4)

Fig 4

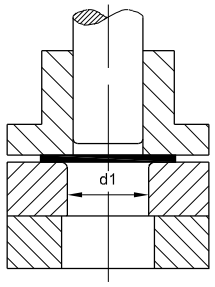

3 The draw punch (dia.d[4]) starts to draw the blank through the draw die. The blank flows over the draw radius. The blank of diameter 'D' is reduced to cup diameter 'd'. (Fig 5)

Fig 5

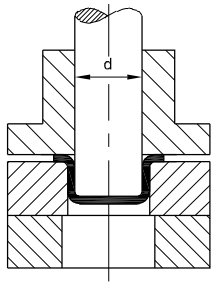

4 The punch has reached its lowest portion completing the draw operation and at this juncture punch assembly starts to retract to its original position. (Fig 6)

Fig 6

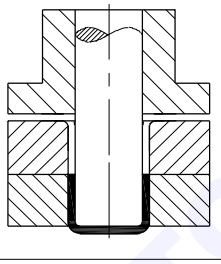

Forces acting on the component while drawing: The different forces acting on the component are:

1 Circumferential compression on the flange. (Fig 7)

Fig 7

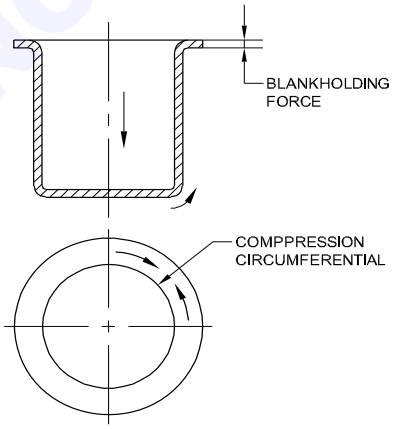

2 Radial tension. (Fig 8)

Fig 8

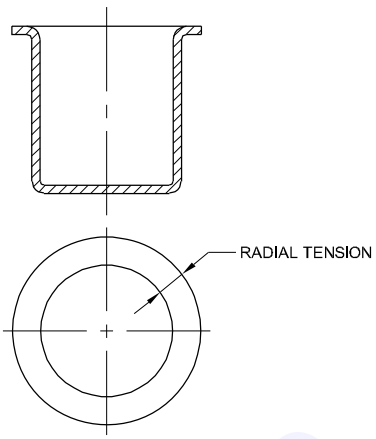

3 Bending at edges. (Fig 9)

Fig 9

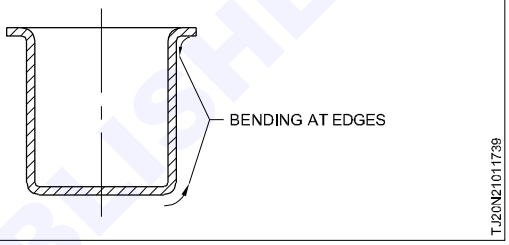

4 Tension the side walls. (Fig 10)

Fig 10

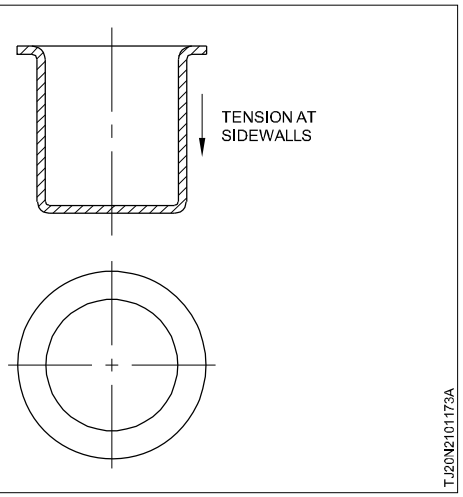

Metal flow during drawing of cyclindrical cups: Metal flow during a drawing operation is as follows:

Assume that the flat blank is divided into 5 concentric elemetns, and each element into segments. The diameter of the circular portion 1 is equal to the diameter of the drawing punch. When the drawing operation starts, this portion remains unaffected during the drawing operation. The element No.2 of the blank is bend and wrapped around the puch nose. Simultaneously the outer portions of the blank (section 3,4 and 5) move radially towards the centre of the blank. The elements decrease in circumferential length and correspondingly increase in radial length until they reach the draw die. They then bend over the edge of the draw die. After becoming the part of the side wall, the elements are straight. (Fig 11)

© TVM NOT TO BE REPUBLISHED

Fig 11

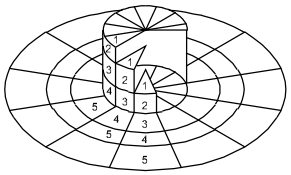

STEP BY STEP FLOW OF METAL

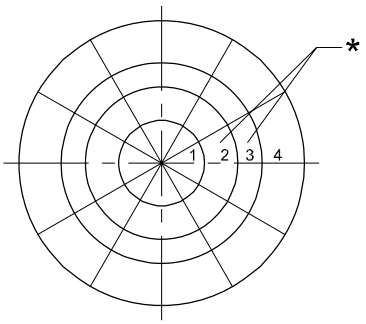

* EACH SECTION MUST COMPRESS MORE THAN THE PREVIOUS SECTION

TJ20N2101173B

The areas which become the side walls of the shell change from the shape of angular segments to longer parallel sided shapes as they are drawn over the draw die.

No further metal flow takes place from this point. The metal flow by cupping is as follows:

1 Little or no metal deformation takes place in the blank area which forms the bottom of the cup. (Fig 12)

Fig 12

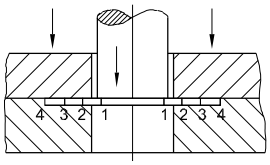

TJ20N2101173C

2 The metal flow taking place during the forming of the cup wall uniformily increases with the cup height.

3 The metal flow of the volume elements at the periphery of the blank is extensive. The metal thickness increases due to severe circumferential compression. This increase in wall thickness is at the open end of the cup wall. In the side walls the increase is usually slight because it is restricted by the clearance between punch and die. (Fig 13)

Fig 13

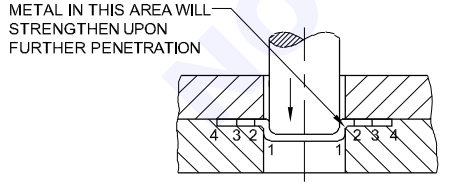

METAL FLOW DURING DRAWING

TJ20N2101173D

Wrinkling and puckering (Figs 14 & 15): Plastic flow of material takes place during drawing. Any condition retarding the necessary flow must be avoided to minimise the stress to which the metal is subjected. The metal may buckle rather than shrink in any location if it is very thin and if a sufficiently wide area is free to move. These buckles are called,

Fig 14

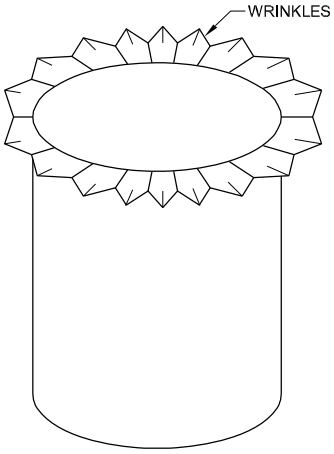

TJ20N2101173E

Fig 15

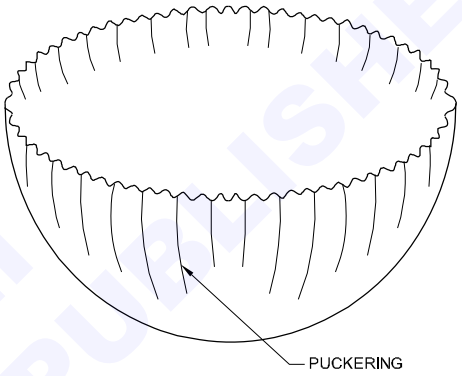

TJ20N2101173F

- wrinkles if they occur at the edge of the blank.
- puckers if they appear in any other part of the blank.

Wrinkles in the flange area are formed due to the circumferential stresses. The wrinkling must be controlled because the formation of wrinkles affect the metal flow. For metals having more tendency for wrinkling, higher blank holding pressures are to be used. When the thickness to diameter ratio of the blank is low, high blank holding pressure is required. When the ratio is high little or no blank holding pressure is required. Chances of wrinkling are more in straight sided cups. Chances of puckering is more in domed or tapered shells. Wrinkling and puckering may occur in straight sided shell, if the die radius and or punch radius are too large.

Blank Development

Before drawing cylindrical or non cylindrical parts, it is necessary to determine the size shape of the blank required to draw or form the part.

These methods are based on the

1 Algebraic calculation.
2 The use of graphical layout.
3 A combination layout and mathematics.

The majority, of these methods are for use on symmetrical shells. It is rarely possible to compute any blank size to close accuracy.

© NIMI NOT TO BE REPUBLISHED

Algebraic Method

During drawing metal flow all around the die is uniform and hence the shape of the blank wall be circular. The following equation may be used to calculate the blank size for cylindrical shells of relatively thin metal. The volume of the metal blank in the shell after drawing remains the same. Neglecting the thinning and thickening of the shell wall and flanges, it may be stated that the surface areas of the blank and the shell formed is the same. By finding the surface area, diameter of the blank can be calculated. Calculation is usually made with the inside dia of the shell which would also the punch dia. Sheet thickness is relatively small and need not be considered. The ratio of shell diameter to comer radius can effect the diameter and should be taken into consideration. The cylindrical shells can be considered as consisting of circular pipes or disc.

1 Consider a cylindrical shell having, (Fig 16)

Fig 16

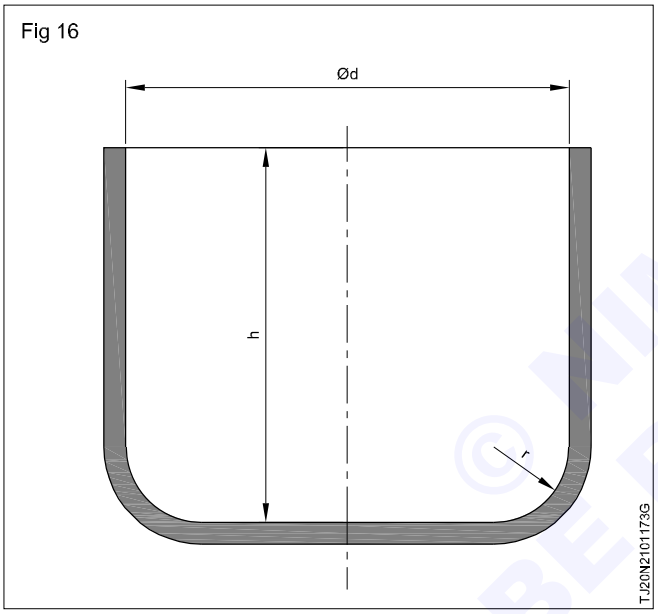

d = inside diameter- of cup in mm

h = Height of the shell measured from inside.

D = Diameter of the blank in mm.

Surface area of cup $= \pi d^2/4 + \pi dh$

Area of the blank $= \pi D^2/4$

By the prindiple of equal area

$\pi D^2/4 = \pi d^2/4 + \pi dh$

$\pi D^2 = \pi d^2 + 4\pi dh$

$D^2 = d^2 + 4dh$

$D = \sqrt{d^2 + 4dh}$ when d/r is >20

This equation will hold well if d/r is 20 or more.

When d/r is in between 15-20

$D = \sqrt{(d^2 + 4dh)} - 0.5r$

When rib- is in between 10-15

$D = \sqrt{(d^2 + 4dh)} - r$

When d/r is below 10

$D = \sqrt{(d - 21)^2 + 4d(h - r) + 2\pi r(d - 0.7r)}$

2 Consider a cylindrical shell having a flange diameter d_1. (Fig 17)

Fig 17

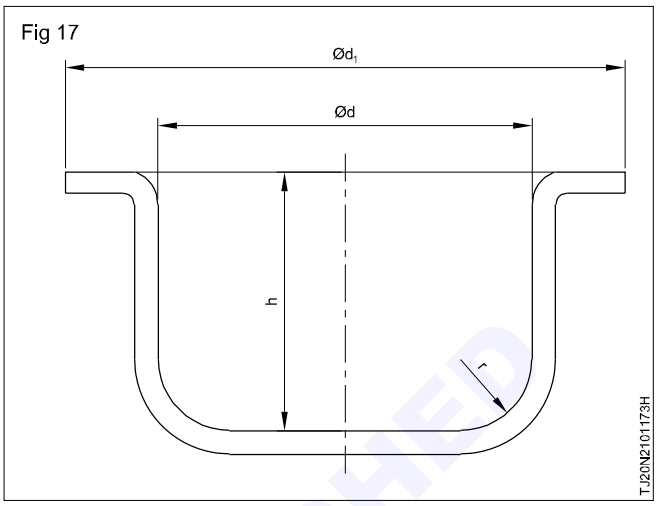

d = inside diameter of cup in mm

d_1 = Flange diameter

h = Height of the shell measured from inside.

Draw Force

Method 1:

Drawing force can be calculated by the percentage of shearing force. The percentage depends on the draw ratio d/D or 'm'.

F $= \pi d \times Su \times a$

d = diameter of the cup in mm.

S = thickness of the material in mm.

Su = ultimate tensile strength in kg/mm^2.

a = constant.

Value of a:

a	0.4	0.45	0.5	0.6	0.66	0.72	0.86	1
m	0.8	0.775	0.75	0.7	0.675	0.65	0.6	0.55

Method 2:

Drawing force.

F $= \pi d \times S \times Sy\ (D/d\text{-}c)$

d = diameter of the cup in mm.

S = thickness of the material in mm.

Sy = yield strength in kg/mm^2.

C = constant (between 0.6 to 0.9)

Press Capacity

The capacity of the press must be greater since the blank holder uses about one third of the capacity of the press. The above methods are used to find only the drawing force. Blank tiding force is not considered.

© NIMI NOT TO BE REPUBLISHED

Blank Holding Force

Optimum blank holding pressure is necessary for the successful draw. Very low blank holding pressures lead to wrinkle formation and high blank holding pressure leads to tearing.

It is difficult to control the pressure in the spring loaded blank holder, when compared with the hydraulic or pneumatic blank holder.

No blank holding force is necessary:

If deformation of the component is small or if m e" 13.8. Or percentage reduction is d" 0.2.

(m = D/d).

Blank Holding Force Calculation

The recommended blank holding pressure varies from 80 to 200 N/mrn^2. Bigger values are used for thinner materials. By knowing the blank holding areas, the blank holding force can be calculated. Blank holding force = blank holding pressure x blank holding area. The pressure varies according to the sheet thickness, cup diameter, D/d ratio and of the strength material.

Die and punch radius: The draw radius of the die should be kept as large as possible to aid metal flow. If it is too large the material will be released by the blank holder too soon and wrinkles will result. When the radius is too small the material will rupture as it is bent around the draw edge. A taper or an elliptical curve may be used instead of a radius to aid the flow of the metal into the die. When more than one drawing operation is required for the component the nose radius should be proportionately smaller than the succeding shell. If sharp radii is used in the first draw, thinning takes place. Its effect will be seen on the side walls of the cup during later operations as a line or depression. The nose radius and sides of the punch should be polished with vertical strokes when used for drawing soft materials. This is to eliminate cross pockets into which the metal may flow and cause fracture when the metal is stripped from the punch. (Fig 18)

Fig 18

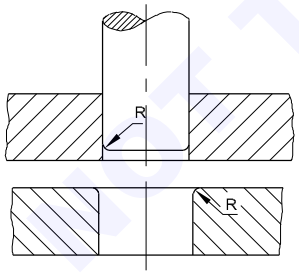

Draw beads: Draw beads are sometimes included in the blank holder faces to provide more resistance to metal flow. This aids the control of metal movement into the die. The beads need not be continuous around the die.

More than one may be placed in areas where greater retardation to metal flow is required.

The draw beads reduce the blank holding pressure. When the metal flows over the draw beads it gets heated up. This development stress relieves and anneals the materials and improves its drawing characteristics. Beads are also used to deflect metal into or away from local areas. (Fig 19 to 22)

Fig 19

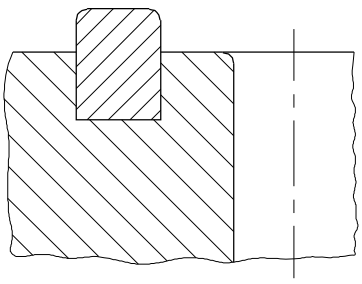

Fig 20

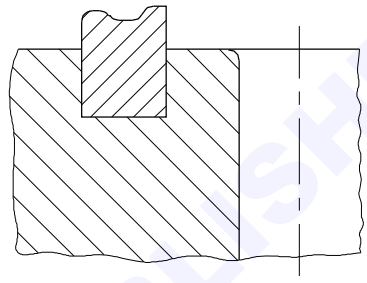

Fig 21

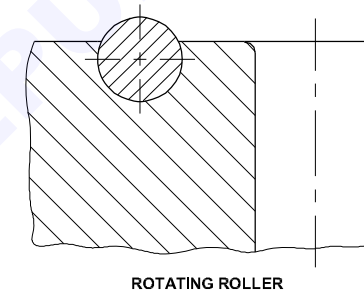

Fig 22

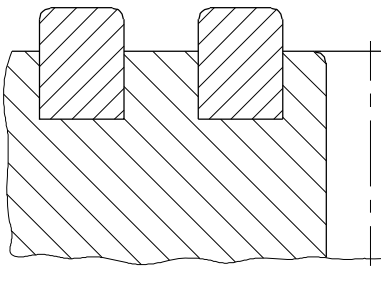

Air vents: An air vent should be provided in the punch and die to eliminate air pockets. Air pockets tend to collapse the cups when stripped from the die. On non cylindrical shapes two or more air vents are provided. To prevent plugging of air vents with drawing compound and dirt they must be placed in positions where they can be easily cleaned. (Fig 23)

Lubrication

The static friction between the blank and the draw die surface must be over come in drawing operation. The

NOT TO BE REPUBLISHED

force of the blank holder adds to the force of the static friction. Once static friction is overcome by the start of the blank movement, continuous movement of the punch is important because the force needed to overcome the dynamic friction is less than that needed for static friction.

Fig 23

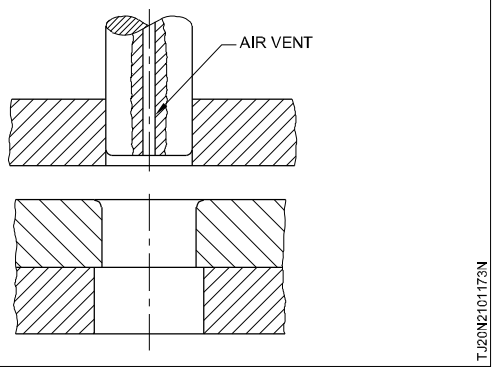

Since blank holder pressure causes higher frictional forces, it should be only enough to prevent the wrinkling of the material. Blank holding pressure that is too high will cause the metal to be restricted and results in tearing of the cup wall.

Blank holder pressure cannot be reduced below the point where wrinkling of the metal occurs. A lubricant is generally applied to reduce friction. Shallow draws in light blanks can be produced with little or no lubrication. When forces become larger and scoring, wrinkling and tearing becomes a problem and lubricant is to be used.

The purpose of the lubricant is to provide a film between the work piece and the punch and the die. The film must be strong enough to permit metal deformation without being squeezed from the surface. Table gives various compositions for press lubricants for stamping and drawing.

When pressures are low, straight mineral oil, general purpose soluble oil or diluted soap solution can give satisfactory service, since pressure will not rupture the lubricating film. As pressures become greater, lubricants containing sufficient oilness (polar material such as fatty oils, waxes, and concentrated soaps) are required. The physically adherent materials are absorbed to the metal surfaces, maintaining a persistent microscopically thin film where lubricants lacking sufficient oil-ness would be squeezed out when the pressure is very high as in severe draw, the corresponding rise in temperature reduces the adhering of the lubricants.

Some forms of extreme pressure lubricant are required if welding (galling and seizure) between the tool and the work surface is to be avoided. Welding is evidenced by metal built up on the punch and the die, causing the scratch mark on the work piece. Improper lubrication may also result in tearing the metal, wrinkling, buckling and other causes for the rejection of the work.

Available extreme pressure (EP) agents function either chemically or mechanically. Those, which provide EP characteristics chemically and usually, contain loosely combined chlorine or sulphur, which reacts with the punch, die and the work to form chemical protection films, that highly resist the welding. Lubricants that function mechanically minimize the friction by incorporating powered spacing agents i.e. pigment such as chalk, graphite and molybdenum disulphide. These substances act as physical separators between the tool and the work.

Press working lubricants are applied by the roller coating, brushing, swabbing, spraying or flushing. The method depends largely on the viscosity of the lubricant. The lubricant is removed from the work piece with an alkaline wash, with emulsifiers or by vapor or solvent degreasing, depending on the type of lubricants.

Other factor influencing the friction is the finish on both sides of the work material and surface finish on the punch, die and the blank holder. A smoother surface on the work material and mating die surface will result in less friction.

Drawing material	Type of operation	Lubrication
Low carbon steel	Mild	Mineral oil of medium to heavy viscosity, Soap solutions, Fatty oil + mineral oil, emulsion.
	Medium	Fat or oil in soap - base emulsions, fatty-oil+ mineral oil, Soap + wax, dried soap film.
	Severe	Dried soap or wax film, Sulphate or phosphate coating +emulsions with finely divided fillers and sometimes sulphurized oils .
Stainless steel	Mild	Corn oil or castor oil, Castor oil + emulsified soap, Waxed or oiled paper.
	Medium	Powdered graphite suspension dried on work piece before operation (to be removed before annealing) sold wax film.
	Severe	Boiled oil, white lead and linseed oil in a heavy consistency.
Aluminium and Aluminium alloys	Mild	Mineral oil, fatty oil biends in mineral oil (10 to 20%) fatty oil.
	Medium	Tallow paraffin, sulphurized fatty oil (10 to 15 %) preferably enriched with 10% fatty oil.

NOT TO BE REPUBLISHED

Drawing material	Type of operation	Lubrication
	Severe	Dried soap film or wax film, mineral oil or fatty oil, fat emulsions in soap water + finely divided fillers
Titanium		Chlorinated paraffin, soap, polymer and wax
Copper		Fatty oil+soap emulsions, (fatty oil =mineral oil + lard oil blends)

Drawing Flanged Components

In drawing flanged cups the cup diameter d must be considered and not the diameter at the flange. Consider an imaginary blank diameter D1 which is required to draw the unflanged portion of the cup. The portion within (Dt-d) will form the vertical portion of the cup.

The vertical portion

π dh = π/4 $(D1)^2$ - π/4 d^2 = π/D - π/4$D1^2$

= $D1^2$ - d^2 = D^2 - $D1^2$

D = "$D1^2$ + ($D1^2$ - d^2)

= "$D1^2$ + ($^{22}d^2$ - d^2)

= "$D1^2$ + (^{22} - 1) d^2

Ths value of D can be used to decide the number of draws.

Determination of number of draws

Assume the cylindrical cup of diameter 10mm and height 18mm drawn from 1mm thick DD quality steel.

The blank diameter is = 30.14mm.

Draw ratio d/D = 10/30.16 = 0.3315

But from the allowable ratio for the first draw is only 0.52. So more draws are needed.

Ratio for redraws = 0.72

$$M = m1 \times m2 \times m3 \times \frac{\quad}{\quad} \times mn$$

0.3315 = 0.52 × 0.72 × m3

= 0.374 × m3

M3 = 0.3315 / 0.374 = 0.89

So three draws with 0.52, 0.72 and 0.98 ratios are needed.

As the reduction at the final stage is very less, safer values with 0.55, 0.75 and 0.8 are selected.

To find the cup diameter at each draw.

Cup diameter after first draw (dl) = 30.16 × 0.55

= 16.6mm

Cup diameter after second draw (d2) = 16.6 × 0.75

= 12.5rnm

Cup diameter after third draw (d3) = 12.5 × 0.8

= 10mm

To find the height of cup after each draw

Height of the cup after first draw = (D^2 - d^2) /4d

= (30.16^2 - 16.6^2) / (4 × 16.6)

= 9.55mm

Height of the cup after third draw = (D2- d2) /4d3

= (30.16^2 - 10^2) / (4 × 10)

= 20.24mm.

But the required height is 18mm. As 20.24 is a safer value, the height 18 can be made in the third draw.

Metal flow in rectangular shells

Drawing of rectangular shell involves varying degree of flow severity. Some parts of the shell may require severe cold working and other simple bending. In circular shells the pressure is uniform in all the sides. But some areas of rectangular and irregular shells may require more pressure than others. True drawing occurs at the corners only. At the sides and the ends metal movement is similar to bending. The stresses at the corners of the shell are compressive as the metal is moving towards the die radius and are tensile on the metal that has already moved over the radius. The metal between the corners is in tension only on both the sidewall and flange area.

The variation in flow of different parts of the rectangular shell divides the blank into two areas. The corners are the drawing area which includes all the metal in the corners of the blank necessary to make full corner of the drawn shell. The sides and the ends are forming area, which includes all the metal necessary to make the sides and ends full length depth.

Faults occuring during deep drawing

1 Faults in material

Lamination may occur as if two sheets are positioned one over the other while drawing. This is caused due to the segregation in the sheet. The quality of the sheet metal must be tested and ensured before drawing.

Laminated holes or surface indentation on the body of the drawn cup. This is caused due to the pores or small hard material impregnated in the material during rolling. To avoid such faults the sheet should be cleared and stored under proper condition.

2 Faults in equipment and design of tools

The bottom of the drawn cup is torn. If the D/d ratio is too large increasing the number of stages or the using the steels with better drawing quality will result in successful draw.

Tearing at the bottom corners occurs at the bottom of the

© NIMI NOT TO BE REPUBLISHED

shells if the sheet thickness is not uniform and the draw clearance is less. Increasing the draw clearance is the remedial action.

Bulges will occur if the draw clearance is more. Increasing the blank holding pressure will help in controlling the defect. If not possible by this method the draw ring, should be replaced.

3 Faults in maintaining and setting tools

Worn out tools or the scales in the sheet will make score mark on the surface of the drawn shell. Chrome plating the drawing edges or de-scaling the sheets by pickling will be suitable remedial action.

If the punch is not located centrally, the shell will fracture. The tool should be reset to avoid this. Low blank holding pressure will cause wrinkles. Blank holding pressure should be increased to required value to avoid this.

Large die clearance will result in the formation of laminated wrinkles.

Inadequate venting will lead to blister marks at the base accompanied by bulging.

© NIMI
NOT TO BE REPUBLISHED

Factors Affecting Tool Life

Objectives : At the end of this lesson you shall be able to
- **determine various factors effective tool life**
- **various factors include press selection, cutting speed, die setting, die life wear of punch & die block**
- **effect of side wall finish of punch & die**
- **enlargement of die opening due to reshaping**
- **care to be taken during resharpening of punch & die**
- **effect of burr on stamping and how to reduce the burr**
- **reasons for breakage of die plate**
- **quality of stock material to be used for press tool working**
- **effect of stock lubrication in press tool working**
- **problems with slugs**
- **slug pulling & slug jamming.**

Problems with cutting die plates

As started before repeatedly any unscheduled or forced production interruptions mean a decrease in productivity. Therefore, every detail must be taken into consideration that may result unplanned down time.

Die plates of cutting dies may cause trouble by:

1 Dulling of cutting edges and consequent excessive burr formation

2 Breakage

3 Cutting die plate performance.

The useful life of a cutting die (blanking, punching, trimming, notching etc) is determined simply by the total amount of satisfactory stampings produced with the die. In operation, cutting edges of the tool must withstand cutting strain due to the stock resistance and the considerable wear caused by the friction after a certain number of operations the keenness of the cutting edge is lost, they become rounded and dull, Consequently the burrs on the outer contour of blanks and/or around the periphery of punched holes become excessive.

(The admissible maximum burr height may depend on the part's function or assembly method or aesthetics or what ever; see more items in the next item). In order to restore original keenness to the cutting edges, the die plate and punch are reconditioned by a slight regrinding. In the case of high production tools, this re-sharpening operation due to enlargement of the die opening tool breaks because of insufficient strength.

Determining factors of tool life

How wear and consequent cutting edge dulling are created is not fully understood in every detail because there too many factors which affect them and these factors cannot be separately and independently examined and evaluated. The determining factors may be classified broadly into four groups, depending on:

1 The stamping.

2 The tool.

3 The press.

4 The operation.

We considered here only those factors that belong to groups (3) and (4) those of group (1) are determined by the component or product designer and those of group (20) depend on the tool design. Therefore, both these group are outside the scope of this book.

To the press group belong to the following chief items: press selection cutting speed and tool setting.

Press selection

For any kind of die the selection of a good press of the right capacity and maintained in proper working conditions is of extreme importance from the productivity standpoint. Every C-frame press (which is the type most commonly used) at the instant of cutting impact, deflects somewhat, misaligning the punch a little if the press capacity is very high with respect to the force required by the cutting action of the die then the press deflections is very small, almost insignificant and no harm is done; on the other hand if the deflection is too pronounced, then the misalignment becomes too great so that uneven wear is produced, and in extreme cases even damage to the.cutting edges occurs. Consequently, it is recommended that where feasible, a much larger press must be selected than is strictly necessary in order to prevented undue press frame deflections. In addition if there is a possibility choosing an OBI (Open Back Inclinable) press and a straight side press, take the later one. It deflects much less and so ensures longer tool life.

Cutting speed

About the cutting speed, expressed in meter per minute at the instant the punch contacts the stock surface, different sources report rather consistent information. Everyone advocates high speeds, within reason. Repeated laboratory experiments carbureted by checks in actual practice, have demonstrated that the temperatures reached during high speed cutting processes do not impair the hardness of the cutting edges.

NOT TO BE REPUBLISHED

In addition, it seems that high speed improves the conditions that prevent premature burr formations. For e.g. according to some British experts in the case of ultra-high speed production process 1000 strokes per-minute or more clean cuts are produced even with what might otherwise be considered as excessive punch to die clearances.

Relationship between cutting speed and tool life

Duration of correct cutting to the anticipated surface finish between grinding is termed as tool life. In metal cutting, increase in cutting speed increases power requirement. Therefore, the mechanical energy is converted into heat energy at the cutting edge. Much of the heat is absorbed by the cutting tool with corresponding increase in temperature, resulting in softening of the cutting tool, which is the reason for inefficient cutting action. The effect of this reduction in tool life is largely present in high carbon steels. Hence, they have to be operated at lower cutting speeds.

Cutting materials such as high speed steel, metallic carbides and oxides can operate at much higher temperatures without reduction in hardness.

Fig 1 shows graphically the relationship between cutting speed and tool life curve in logarithmic form. A small increase in cutting speed from A to B causes large reduction in tool life from C to D, while small reduction in cutting speed causes a large increase in tool life.

Thus when the machine gearbox does not give the required cutting speed, it is better to use the next lower speed rather than the higher speed.

Tool life index

The relationship between tool life and cutting speed can be represented by the following equation for most practical purposes.

$Vt^n = C$

where V = cutting speed in m/min.

t = tool life in minutes

n and C are constants for a given-set of conditions.

The value of n lies between 0.1 to 0.2 and typical values are given in the following table.

Fig 1

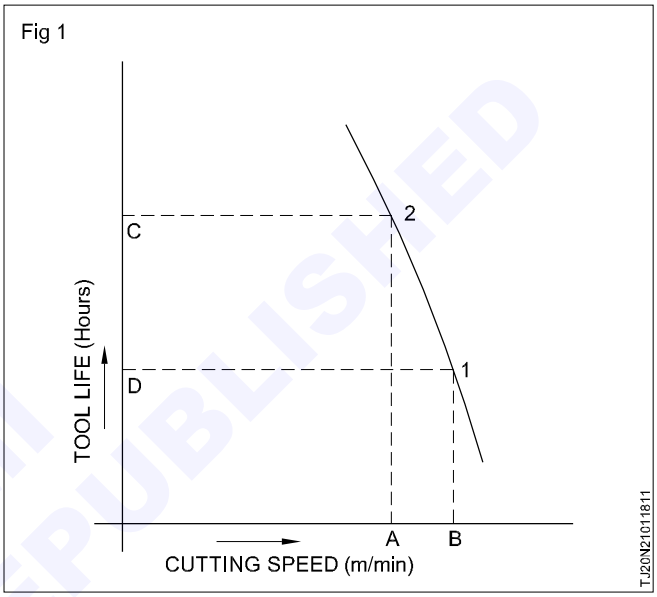

Table

Tool life Index

Material and conditions	Tool material	n
3 1/2% nickel steel	Cemented carbide	0.2
3 1/2% nickel steel (roughing)	Highspeed steel	0.14
3 1/2% nickel steel (finishing)	Highspeed steel	0.125
High carbon, high chromium die steel	Cemented carbide	0.15
High carbon steel	Highspeed steel	0.2
Medium carbon steel	High-peed steel	0.15
Mild steel	Highspeed steel	0.125
Cast iron	Cemented carbide	0.1

Die setting

The craftsmanship, skill and care with which the die setter performs his job play an important role in tool performance. The proper setting of the tool in the press of utmost importance not only for open type dies but also for those tools that provided with die sets. Infact, if the alignment is not correct, excessive friction and certain dangerous lateral stresses are produced which cause premature wear of the tool member.

To the operation group belong the following chief items, operation proper, lubrication of stock and lubrication of the tool.

Operation with the tool

The press shop contributes in several ways to tool performances. One of the first requirements consists of the periodic cleaning of the tool in order to avoid accumulation of dirt, chips, or foreign matter, which mix with the lubricant, act as abrasives and considerably increase tool wear.

© IIMI NOT TO BE REPUBLISHED

The press operator is supposed to co-operate in the prolongation of the useful life of the tool by,

A Avoiding any irregularities (double blanks put into the nest, faulty nesting of blanks, inaccurate feeding;

B Inform foreman immediately when burr starts to become excessive;

C In general, giving the tool the it deserves as an expensive precision products.

Proper lubrication and cooling of the metal to be stamped are great helps in facilitating the operation. The direct consequence is among other benefits a notable prolongation of tool life, because the friction between the work-piece (blanks or slugs) and cutting members of the die is greatly reduced. Also, the moving members of the tool must be properly lubricated just like any moving part of the machine. Therefore, the bushings and leader pins of the die sets are to be greased constantly, in order to avoid galling.

Die Life

The production potential of a die is considered in terms of the number of piece parts it can produce from the time it is new until it is worn out. It varies according to the,

1 Stock material used

2 Material used for die components.

When a die is running and producing, cutting edges wear and become dull. They must be sharpened at the approximate time by grinding the punch and die block face. Heights H and H1 are reduced a corresponding amount each time the components are sharpened (Fig1). At each sharpening dimensions G and G1 are reduced by the amount H and H1. the usable portion of the punch is equal to G. G1 are removed from the punch and the die block respectively. The die then appears as shown in figure2. Punch height is equal to H —G and die block thickness is H1 — G1. The shut height S gas been reduced by an amount equal to G + G1. After this is no further production is possible and the die is replaced.

If more than necessary amount of material is removed from the punch or die block the life of the die is reduced.

Wear of punch and die block

Normally punch wears at approximately the same rate as the mating die block. In some cases punch may wear twice as fast as the die block. Usually the wear will be greater for piercing punches than for blanking punches.

When a blank or slug is blanked or pierced through the die opening it enters the die and goes out through. Thus it moves in one direction only Punch is forced through the stock material during the cutting action and stripped from it on the return press stroke. So punch wears during cutting as well as during stripping. The punch therefore wears faster than the die cutting edge by an amount directly in proportion to the stripping friction. If a punch strips freely tends to wear at approximately the same rate as the die cut edge. If stripping friction is high the punch wears correspondingly faster

Under identical service conditions blanking punches wear slower than the piercing punches. This is because the blanking punches are easier to stripping than piercing punches (Ref. stripping force).

Side wall finish

Any factor that affects the amount of friction between the punch and the die and the stock material also affects the efficiency and the life of the component. Thus the quality. of sidewall finish has direct influence on the degree of the friction. The smooth finish and the layoff finish are important for the die efficiency. The direction of the lay must be parallel to the direction of the punch travel.

Excessive wear

Abnormal wear can be caused by any of the following conditions:

1 Cutting clearance - Insufficient or excessive.

2 Entry - punches enter too far into the die opening.

3 Crown - punches are too close to each other.

4 Punch height - vertical punch height is too great in relation to the cross sectional area of the punch.

5 Hardness

6 Finish

7 Suitability of the material.

8 Secure mounting.

9 Stripping

10 Excessive runs - producing too many pieces between sharpening.

11 ress condition

12 Careless setup.

Characteristic cutting wear

The work has smooth cut band of even height ‘H’. the break is clear. Height ‘h’ is influenced by number of factors such as the physical properties of the stock material, punching speed, cutting clearance etc. smaller cutting clearance produce higher cut bands, but accelerates the wear of the cutting edges.

Newly sharp cutting edges are dead sharp. The dead sharp condition begins to deteriorate as soon as the die begins to run. After a short time the initial edge breaks off to produce the working radius R2 on the cut edges. This is the optimum running condition. Size of the working radii is variable and is influenced by the,

1 Type of the material used to manufacture.

2 Hardness of the die member.

3 Physical properties of the stock material.

4 Thickness of the stock material.

The cutting edge attains the maximum resistance to wear when the working radius exists. It is during this stage that the production potential of the tool is realized.

NOT TO BE REPUBLISHED

As the production continues the size of the working radius increases. The corner profile becomes parabolic in shape. When this stage is reached the wear accelerates rapidly. If the production is continued the harmful effect shown in view D begin to appear.

Die members should be sharpened before the parabolic wear stage becomes pronounced. By observing the condition of the components this stage can e anticipated. If the die components are sharpened before the wear becomes excessive sharpening is possible without excessive grinding. If the sharpening is done after the condition becomes severe, more material will have to be removed from the cutting edges. The excessive grinding is necessary and the ultimate life of the die will be reduced.

Enlargement of the die opening due to sharpening

When sharpening extends below the die land, the amount of increase in the die opening size is directly proportional to the degree of the angular clearance.

The increase per side can be calculated from,

A = B tan ¼

Where,

A = Increase per side.

B = Amount removed by the grinding cutting face.

¼ = Clearance angle in degree.

A is added to the amount of the cutting clearance before sharpening is new cutting clearance after sharpening.

For tools having angular clearance from cutting edge (no land) the angle p is made smaller so that the increase in the clearance is when the re-sharpening is within the limits.

Example 1

The die for producing a component is made with back taper of 1° from the cutting edge. Calculate the number of components, which can be produced so that the component is within the tolerance zone. Regrinding allowance is 0.2mm per grinding. It is possible to produce 10,000 components between two grindings.

Die size before grinding = 20.0

Back taper = 1°

Max die diameter = 20.1

Let the total amount which can be ground without loosing the component dimension = X

Tan 1° = 0.051X

X = 0.05 / Tan 1° = 2.864

Regrinding allowance = 0.2 per grinding.

(Therefore number of grinding possible)

= 2.864 / 0.2 14.3 = 14.

Number of components produced between two sharpening = 10,000

Therefore number of components produced by the tool

= 14 × 10,000 + 10,000

= 1,40,000 + 10,000

= 1,50,000.

Example 2

A die plate 24.6mm thick having, a opening with 3mm thick having and 1/2° taper thereafter produces component tolerated -0.015 in the 10.03 middle of the tolerance field. Determine the number of components that can be produced if the regrinding allowance is 0.2mm. it is possible to produce 10,000 components between the consecutive sharpening.

Present die size = -0.006

Back taper = 1/2° = 0.045/X

X = 0.045 / tan 1/2° = 5.156

Total height which can be ground = 3 + 5.156 = 8.156

Re-grinding allowance = 0.2 per grinding

Number of grindings possible = 8.156 / 0.2 = 40

Therefore number of components produced = 40 × 10,000 + 10,000.

= 4,00,000 + 10,000

= 4,10,000.

Sharpening of punches

It is an established fact that punches are subjected to more wear than die plates. This stands to reason since a punch penetrates the stock and afterward must be pulled out of the material. (In a die plate, normally the material is in contact with the die opening only once). In addition, the stock clings to punch sides like press fit. Practical observations have demonstrated that punches wear about three times as fast as die plates. Consequently these practical recommendations should be followed.

1 Do not employ the same kind of tool steel for cutting members, punch and die plate. It seems logical — and actual practice confirms its correctness to use a better quality tool steels for punches, with higher wear resistance characteristics, than for die plates.

2 The standard practice to sharpen die-plates punches at the same time does not make much sense. Make the punch longer than strictly necessary and sharpen them more frequently than the corresponding die-plates (two too one or even three to one).

Remove feather edges

Among other basic factors that determine the useful life of a cutting die, there is one of the practical characters that concern only the press-shop people and not the tool designer, nor the tool-maker. The detail in questions consists of the fact that after grinding a die plate or a punch, featheredges are formed around the cutting edges. If these small steel silvers are not removed, they

© NIMI NOT TO BE REPUBLISHED

are introduced automatically (during the regular cutting with the die) between punch and die-plate opening and quickly cause a premature dulling of the cutting edges and sometimes even their nicking or chipping.

There is a very simple remedy for this problem; it is exactly what the smart machinists do with the cutting edges of ordinary cutting tools (tool bits for turning, shaping, etc). after sharpening a die plate or a punch, remove the featheredges with a fine oilstone. It is surprising what a favorable influence this little precaution has on the useful duration of the dies. A fringe benefit of this consists of improved surface finish of the cut surfaces.

Protective coatings are helpful

According to corresponding reports, when blanking or punching sheet metal coated with either paper or plastics, both the burr formation and the wear decrease notably on those tool members that are in contact with the coated side of the stock.

This detail is especially significant in the production of laminations for electrical devices. These stampings, made from highly abrasive silicon steel, usually cause very rapid wear of tool members.

Demagnetizing Tool Members

Tool members are usually held in magnetic fixtures for re-sharpening. The residual magnetism can be a very troublesome problem and in particularly severe cases it can make the whole operation of the press impractical or, at least, inefficient. Infact, the adherence of metallic chips, flakes, or silvers cuffing edges of the die produces a rather effective abrasive action causing premature dulling of cutting edges. The result are shorter runs between grinds and an overall shortening of the tool life. Therefore carefully demagnetized all sharpened tool members before assembly of the dies.

Special heat treatments

Delicate blanking and piercing die plates some times develop fine hair cracks after limited use, owing to brittleness provoked by constant stain or repeated stresses. In order to avoid premature wear it is recommended that these die plates be taken out of the press after a certain number of hits and held at a temperature of 350°F(177°C) for about 1 hr. This heat treatme nt relieves the stress without impairing hardness.

Breakage of Die-plates

It happens sometimes that during the operation of the die, the die plate cracks or breaks. This is due either to wrong design (which produces a structurally weak component) or to overload or a combination of the tool (which is the most frequent case).

The design of die plates belongs to the province of tool design, which is out side the scope of this book. On the other hand, overloads are caused by the wrong used of the tool responsibility of the production people.

There are several possibilities of creating situation where a die plate is subjected to overload that may result in its failure. Here are a few causes:

Starting with the setting of the tool, the necessary parallels needed for supporting the tool must have ample width and should be located as near as possible to the clearance opening of the blanking and punching stations in order to obtain the greatest support for the die and prevent sagging of the die plate. If parallels are set too far apart, the die plate apt to bend under the force of the cutting action, thus decreasing the punch to die clearance. Consequently, there is a definite increase in the required cutting force that in it s turn causes for the bending of die plate with further decreasing of the punch to die clearance. Such phenomenon often results in severe overloads and die plate breakages.

During the operation of a tool the following details may be directly or indirectly cause die plate failures:

1 Every cutting tool has fixed punch to die clearance i.e. necessary for a given stock of particular characteristics, chiefly thickness. This value should not be used for a material requires a different punch to die clearance.

2 Inaccurate feeding causes the cutting of half blanks or half holes results in the deflection f force and results in chipping of cutting edges. Two strip fed simultaneously greatly overload the die. Similarly, two blanks to be punched in second operation dies any stick together if too heavy a lubricant has been employed for blanking.

3 In punching of small holes, slugs often clog the clearance holes, resulting in the punch breakage and damage to the die plate (see corresponding item in this chapter).

4 Finally standard maintenance and inspection practices contribute to a long die life to avoiding problems. Cutting edges should be checked frequently for sharpness and reground if necessary. In fact, very dull cutting edges mean overloading and thus spilling and breaking if die plates.

Burrs

Every one connected with the production of metal stampings is constantly concerned with burrs. Metal stamping designers, press tool designers, toolmakers, press operators, inspectors are all burr conscious. However, curiously enough, many of these people are not able to define the word burr. Therefore let us start by giving an explanation of what a burr is and how it comes to be.

Burr is an unwanted, sharp, uneven ridge of protruding roughness around a hole periphery or a blank outer contour, caused by the displacement of mental a consequence of a cutting operation.

In happens quiet often that component or part or product designer specific stamping without any burrs, which demonstrates their lack of knowledge about metal stamping technique. In fact, it is an established fact that in every cutting die as well as in metal shearing machines, the very cutting actions causes a more less progressive dulling of the cutting edges. Consequently, after a certain no. of operation the outer contour of the blanks and the

NOT TO BE REPUBLISHED

periphery of the punched holes throw up a more or less pronounced burr. This is a natural phenomenon and there are no exceptions to this rule; there is no possibility of producing totally burrs-less stampings, at least not consistently.

Burr height is usually measured indirectly (figure 40.5). Burr height “b” is equal to “h” (total height) minus “t” (original stock thickness).

While the burr height remains below certain limits (see below), it does not harm, but when the burr height becomes excessive, the tool must be reconditioned. i.e. the sharpness of the cutting edges must be restored by grinding.

Burr height is practically the same on the periphery of a hole as on the corresponding slug or stamping. For practical reasons of easier handling, burr is usually measured on the slug.

Determining factors

In order to reach the best tool efficiency in a drawing die, everyone connected with the matter must contribute his share the part designer, the tool designer, the toolmaker, the press shop foremen and even the press operator.

The chief determining factors of useful life may be listed as follows: stock characteristics, shell shape and size, tool design and building, stock handling, stock lubrication and die operation. Since the details concerning product and tool characteristics are out side the scope of this book, only those details that depend on actual production of the drawing sheets will be considered.

Press selection

For any kind of die, but most especially for unguided (plain, open type) ones, i.e. those not mounted in dies sets, the selection of a satisfactbry press of adequate capacity (at least with a 50% margin, but better with 100%) and maintained in proper working condition, is an extreme importance from the standpoint of increased useful tool life. Almost every press, at the instant of impact, deflects somewhat (especially the very popular C-type presses) misaligning the punch a little. If this deflection is very small, then no harm is done: on the other hand, if the deflection is too produced and thus tool life is greatly reduced.’

It must be noted that by reducing the drawing speed (feet per second) the tool life is some what increased. In fact, for low speeds, the metal flow is facilitated and thus the strain on the tool members is decreased.

Tool setting

The skill and care of the die setter play an important role in tool performance. Proper setting of the tool in the press is of utmost importance not only for unguided dies but also for guided ones (direct guide or die set mounted). In fact, if the alignment (adjustment or centering of the movable or stationary members) is not correct, certain dangerous friction and lateral stresses are set up that provoke premature tool wear on the tool members.

The correct adjustment of the blank holding pressure directly affects the tool life. In those cases where the blank holder must exert too high a pressure (greater than strictly necessary for the operation) premature wear of the working surface is the consequence.

A tool mounted in the press, which is not clamped correctly is in serious danger of becoming misaligned, even if it is correct in the beginning: this is because of shifting due to vibrations. The consequences are premature wear of the working surfaces.

Stock

The stock to be stamped should be clean, without scale, oxidation, or rust. In fact if a hammer or roll scale is present on the metal surfaces, the active working surfaces of the tool members will wear down quickly, because of the strong abrasive action of the hard scales. Oxidized or hot-rolled sheets drastically decrease the tool life. In addition, the metal sheet must be perfectly uniform in texture, hardness, thickness, surface finish, etc because otherwise the unsymmetrical loads caused by, such irregularities throw the punch out of alignment and the unavoidable consequence are premature wear of the working surface of the tool members.

During the handling of the stock, every care must be taken in order to keep the sheets and strips perfectly clean to avoid, at the same time, any bumps or blows which may cause surface imperfections. These imperfection and/or foreign matter deposited on the stock result in accelerated wear of the tool members.

Stock lubrication

In drawing operations, lubrication creates a film between the stock and the tool members, thus allowing the stock to slip easily between the active tool members. In this way the friction between the working surfaces of the tool and the stock that is being produced is reduced and, therefore, the heat produced by the operation is greatly decreased. Consequently, less wear on the tool components and thus longer life is achieved.

They type of lubricant has a great influence on result. Always consult the supplier and make exhaustive tests in order to find out which lubricant gives the best results for each operation. For every kind of operation and every kind of stock there is a “best” lubricant: there is no such thing as a “universal” lubricant, i.e. there is no single type of lubricant that is equally satisfactory for all kinds of press operations and kinds of stock.

Press room

The press room may also contribute considerably to the tool performance. One of the pertinent details consists of the periodical cleaning of the tool in order to avoid accumulation of dirt, chips and foreign matter, which, when mixed with lubricant, act as an abrasive and considerably increase tool wear.

Finally the press operator may contribute directly to the prolongation of the useful life of the tool by,

1 Avoiding any irregularities (double blanks put into the nest faulty nesting of the blanks, etc).

2 Informing the foreman immediately as soon as wrinkles or cracks appear in some shells.

3 In general, giving the tool the care it deserves as a precision piece of equipment.

Problems with slugs

Automatic and semiautomatic productions of metal stampings involve much more than simply providing expensive presses, dies and material-handling equipment. It also means assurance of trouble free operations. As mentioned in this book repeatedly, unscheduled production interruptions must be prevented at any cost.

One of the ever-present problem areas in the production of sheet metal stampings is small slugs. Punching and blanking are essentially the same operation. In both cases a continuous object, the slug, is cut out from sheet metal. The shape and dimensions of the slug are determined by the die opening. The basic different between punching and blanking consists of the use of the slug. In punching the slug is called a punching and is scrap; in blanking it is called a blank and is the actual work-piece. However there are occasional cases where the punching from a blank becomes an independent component (typical example: rotor lamination are punching from stator laminations).

Slugs sometimes cause problems which involve expense, loss of time, labor costs and lowering of the production efficiency of the corresponding press tools. There are two major inconveniences caused by slugs that must be taken care of clogging of die openings and slug lifting or pulling.

Jamming the slug discharge holes

Jamming or plugging of the slug discharge holes in the die plates and/or in the die shoes is due to the successively cut slugs becoming compressed together and building up into almost solid columns. Therefore, under certain favorable conditions, some slugs in the columns can shift to a crosswise position and literally clog the slug exit holes in die plates and/or die shoes. The possible consequences are quite numerous and varied: punch bending, punch breakage, die plate cracking, damage to the die shoes, and even damage to press.

Slug pulling

Slug pulling is the return of the slugs above the die plate. Comparatively small and medium size, regularly shaped, thin, flat slugs have a decided tendency to cling to the bottom end of the punch and to be lifted from the die opening at the return stroke of the press ram. There are several disagreeable consequences: possibility of mis-feeds, subsequent blanks are more or less marked and deformed; sometimes if the slugs shift onto some cutting edge, punches and/or die opening edges may be damaged, and punches may breaks.

Causes and Remedies

Experts on press working on sheet metals (press tool designers, toolmakers, press shop foremen etc) have various and some times opposite opinion about the possible and probable causes and corresponding remedies of these two problem areas. Therefore, the general consensus of opinion about these conditions is presented here.

First of all, it has been found that there are several factors that may cause either clogging of die openings or the tendency for slug pulling. Generally, there is no single cause in a given case, but a combination of cause occurring simultaneously.

The cheap causes of trouble with slugs or these: incorrect die design, inadequate die making incorrect punch-to-die-clearance, advanced tool wear, excessive and/or inadequate lubrication, and unfavorable stock. The corresponding remedies for preventing and eliminating the problems belong cheaply to the provinces of the product and tool designer so they are outside the scope of this book. Here only a few details are dealt with which are the direct responsibilities of the production people.

Tool setting

Some times it is the die setter who is responsible for the clogging of the die openings. It is obvious that the tool must be so located on the bolster plate or the press table that the slugs have an absolutely pre discharge path i.e all the clearance holes of the plates and die shoes, must have correctly positioned discharge holes of the right size. Quiet often riser block and/or parallels partially obstruct some discharge holes: the consequences are almost always jamming of holes in question.

In addition the shut height of the press should be so adjusted that the slugs are pushed into the die cavity, in order to avoid slug pulling.

Tool wear

The keenness of the cutting edges-both on the die plate and on the punch and is of great importance. In addition to other consideration of tool life, appearance and function, burred slugs have a greater tendency to cling to each other and for columns then obstruct the die openings. Consequently, for best results, should always-minimum burrs.

Also if the punch bottom end is deformed by wear, becoming slightly mushroomed brings increases, and slugs increasingly tend to stick to the punch and lift from the die.

Lubrication

Stock lubrication must be studied and controlled carefully. Experts on press working of metal strongly recommended that the right kind of lubricant always be used.

Avoid the use of lubricant that is too viscous, which increases the tendency of the slug to jam the die openings and to pull. There fore, when one of these problems occurs check the other details the lubricant viscosity and if possible, Changes to a less viscous lubricant. Also reminder that lubricants must always be applied sparingly. Too heavy a lubricant film acts as a kind if cement increases the slug problems.

Magnetized punches

Punches some time become magnetized, either while

NOT TO BE REPUBLISHED

being sharpened or simply by the earth's magnetic field combined with the punching action. Of course, this phenomenon increases the damage of the slug fitting. Therefore, always demagnetized punches after re-sharpening and whenever there is a suspicion that they have become magnetized naturally.

Fine Blanking

Objectives: At the end of this lesson you shall be able to
- **state what is fine blanking**
- **state application of fine blanking**
- **explain the working principle of a fine blanking tool**
- **explain the fundamental design details of a fine blanking tool**
- **calculate the forces necessary for successful fine blanking operations.**

Fine Blanking

Fine blanking produces components with straight edges and confirming to IT 7 quality.

No crack is formed at the cutting zone because of the combined action of the fine blanking press and tool.

Further finishing operations are not necessary for a fine blanked component. The cut edges will be straight. The flatness of the component will be better than that obtained by conventional blanking.

In fine blanking the burr is less because of the reduced cutting clearance.

If burrs are to be completely eliminated tumbling or linishing is done.

Applications: Fine blanked parts are used by the office machine industry, electrical industry, horological industry, electronic industry etc.

Working principle: The tool has a very small clearance between the punch and die (0.01 mm or even lesser). A Vee ring in the press plate is pressed on the sheet giving a relatively greater press force on the cutting line.

The working of a fine blanking tool is in seven stages

1 Feeding of strip (Fig 1)

Fig 1

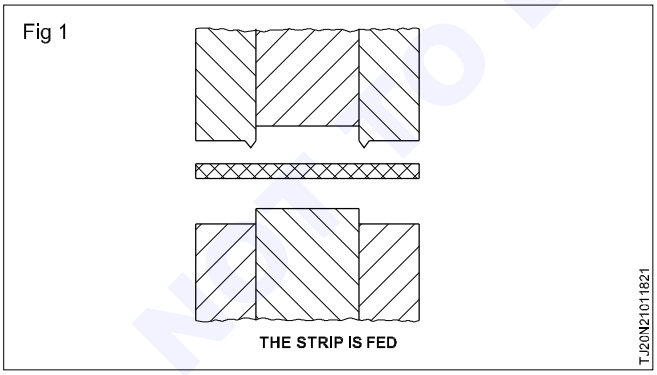

2 Locating and pressing with 'Vee' ring. (Fig 2A & B)

3 Strip goes along with the punch. (Fig 3)

4 The component is ejected. (Fig 4)

5 Stripping. (Fig 5)

6 The component is removed from the tool. (Fig 6)

7 Ready for next feeding (Fig 7)

The vee ring: Pressure is given by the Vee ring on all sides of the strip. Because of this during blanking operations the ultimate tensile limit is not reached at the cutting zone. (Fig 7)

Fig 2

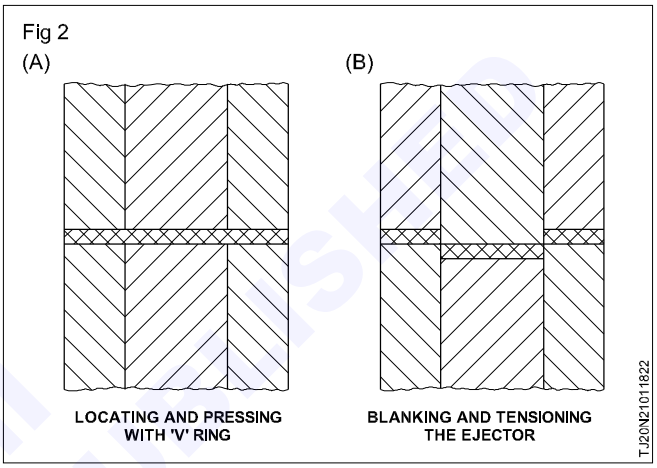

Fig 3

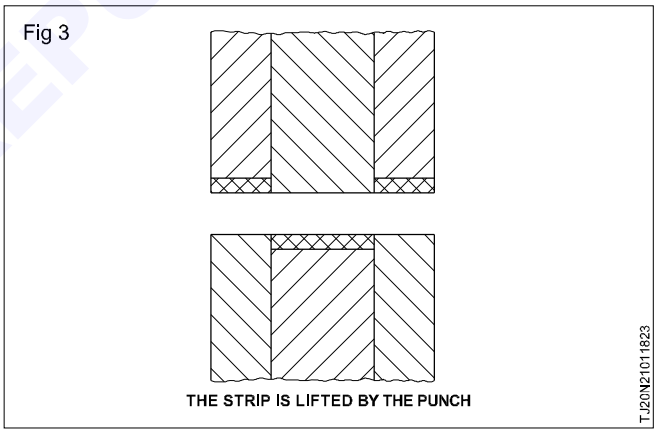

Fig 4

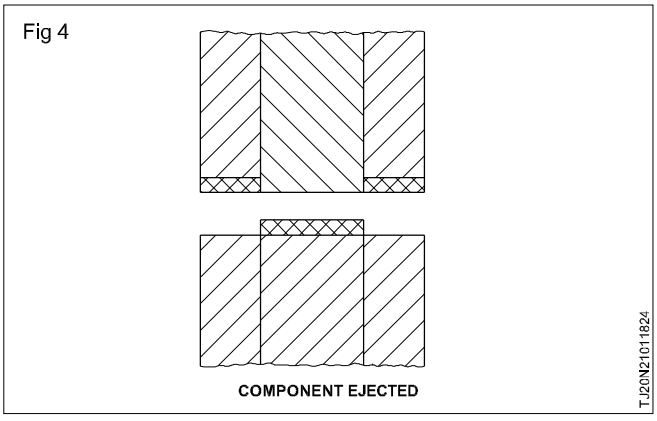

NOT TO BE REPUBLISHED

Fig 5

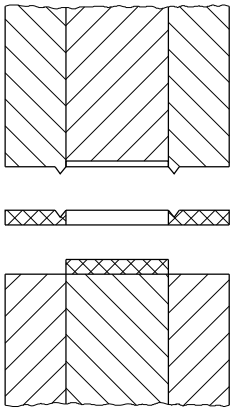

STRIPPING

T.J20N21011825

Fig 6

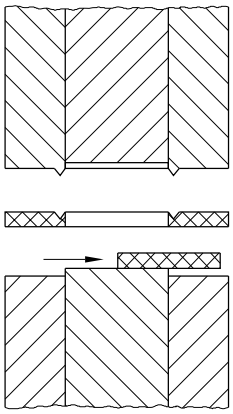

COMPONENT REMOVED FROM TOOL

T.J20N21011826

Fig 7

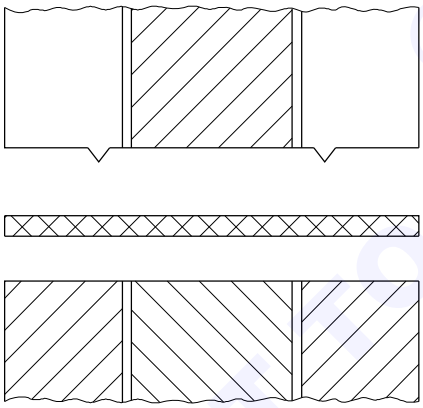

T.J20N21011827

Strip width and margins: The scrap margins and the strip width are larger than in conventional blanking.

This is due to the presence of Vee ring.

Press force: The process force is a combination of three forces. (Fig 8)

1 The blanking force F_B

2 The force of the vee ring F_R

3 The counter force F_C

F_B = L X s X Tmax

L = cut length in mm

s = sheet thickness in mm

Tmax = shear strength in N/mm^2

Fig 8

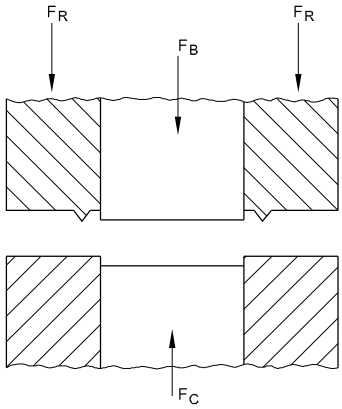

T.J20N21011828

FR = 0.4 to 0.6 FB

FC = L X s X f

Where L = length of cut in mm.

s = sheet of thickness in mm.

f = specific counter force 20 to 70 N/mm^2

A high counter force will overload the punch.

The possibility of punch failure in a fine blanking tool is about three times more as compared to die failures.

Therefore the corners and pointed portions are rounded off.

Die details

Clearance per side: For punch diameter over 1.2s clearance is 0.5% of s.

For punch diameter 0.8 to 1.2s clearance is 1% of s.

For punch diameter 0.6 to 0.8s a clearance is 1.2% of s.

Minimum distance for die aperture: Distance from the die opening to the die block edge.

1 for ground and split dies 25 mm.

2 for solid EDM cut dies 35 mm.

Tool life: The number of components that can be produced between two consecutive grinding depends on,

1 The strip material

2 Sheet thickness

3 The characteristics of the press

4 The quality of the fine blanking tool.

Sheet thickness: Fine blanking operations can be carried on without any difficulty on sheets of thickness between 0.7 mm and 14 mm.

Sheets of thickness below 0.7 mm are difficult to fine blank because of the pressure of V ring.

Punch and die radius: The sharp edges of die opening and punch edges are rounded off before trial of the tool. It improves conditions for better flow of material fibres.

The radius depends on the quality and thickness of the material fibres.

The trail is started with minimum radius.

They are slowly increased till a clean cut edge is available on the component.

© NIMI NOT TO BE REPUBLISHED