MECHANIC ELECTRIC VEHICLE

NSQF LEVEL - 4

1st Year

TRADE PRACTICAL

SECTOR: AUTOMOTIVE

(As per revised syllabus July 2022 - 1200 Hrs)

© NIMI
NOT TO BE REPUBLISHED

Directorate General of Training

DIRECTORATE GENERAL OF TRAINING
MINISTRY OF SKILL DEVELOPMENT & ENTREPRENEURSHIP
GOVERNMENT OF INDIA

NATIONAL INSTRUCTIONAL
MEDIA INSTITUTE, CHENNAI

Post Box No. 3142, CTI Campus, Guindy, Chennai - 600 032

Sector : **Automotive**

Duration : **2 Years**

Trade : **Mechanic Electric Vehicle - 1st Year - Trade Practical - NSQF Level - 4 (Revised 2022)**

Developed & Published by

National Instructional Media Institute
Post Box No.3142
Guindy, Chennai - 600 032
INDIA
Email: chennai_nimi@nic.in
Website: www.nimi.gov.in

Copyright © 2023 National Instructional Media Institute, Chennai

First Edition : February 2024 Copies: 1000

Rs.315/-

© NIMI
NOT TO BE REPUBLISHED

All rights reserved.

No part of this publication can be reproduced or transmitted in any form or by any means, electronic or mechanical, including photocopy, recording or any information storage and retrieval system, without permission in writing from the National Instructional Media Institute, Chennai.

FOREWORD

The Government of India has set an ambitious target of imparting skills to 30 crores people, one out of every four Indians, by to help them secure jobs as part of the National Skills Development Policy. Industrial Training Institutes (ITIs) play a vital role in this process especially in terms of providing skilled manpower. Keeping this in mind, and for providing the current industry relevant skill training to Trainees, ITI syllabus has been recently updated with the help of Media Development Committee members of various stakeholders viz. Industries, Entrepreneurs, Academicians and representatives from ITIs.

The National Instructional Media Institute (NIMI), Chennai, has now come up with instructional material to suit the revised curriculum for **Mechanic Electric Vehicle - 1st Year - Trade Practical - NSQF Level - 4 (Revised 2022) in Automotive Sector** under **Annual Pattern.** The NSQF Level - 4 (Revised 2022) Trade Practical will help the trainees to get an international equivalency standard where their skill proficiency and competency will be duly recognized across the globe and this will also increase the scope of recognition of prior learning. NSQF Level - 4 (Revised 2022) trainees will also get the opportunities to promote life long learning and skill development. I have no doubt that with NSQF Level - 4 (Revised 2022) the trainers and trainees of ITIs, and all stakeholders will derive maximum benefits from these Instructional Media Packages IMPs and that NIMI's effort will go a long way in improving the quality of Vocational training in the country.

The Director General of Training, Executive Director & Staff of NIMI and members of Media Development Committee deserve appreciation for their contribution in bringing out this publication.

Jai Hind

© NIMI
NOT TO BE REPUBLISHED

Atul Kumar Tiwari, I.A.S
Secretary
Ministry of Skill Development &
Entrepreneurship,
Government of India.

New Delhi - 110 001

PREFACE

The National Instructional Media Institute (NIMI) was established in 1986 at Chennai by then Directorate General of Employment and Training (D.G.E & T), Ministry of Labour and Employment, (now under Directorate General of Training, Ministry of Skill Development and Entrepreneurship) Government of India, with technical assistance from the Govt. of Federal Republic of Germany. The prime objective of this Institute is to develop and provide instructional materials for various trades as per the prescribed syllabus under the Craftsman and Apprenticeship Training Schemes.

The instructional materials are created keeping in mind, the main objective of Vocational Training under NCVT/ NAC in India, which is to help an individual to master skills to do a job. The instructional materials are generated in the form of Instructional Media Packages (IMPs). An IMP consists of Theory book, Practical book, Test and Assignment book, Instructor Guide, Audio Visual Aid (Wall charts and Transparencies) and other support materials.

The trade practical book consists of series of exercises to be completed by the trainees in the workshop. These exercises are designed to ensure that all the skills in the prescribed syllabus are covered. The trade theory book provides related theoretical knowledge required to enable the trainee to do a job. The test and assignments will enable the instructor to give assignments for the evaluation of the performance of a trainee. The wall charts and transparencies are unique, as they not only help the instructor to effectively present a topic but also help him to assess the trainee's understanding. The instructor guide enables the instructor to plan his schedule of instruction, plan the raw material requirements, day to day lessons and demonstrations.

In order to perform the skills in a productive manner instructional videos are embedded in QR code of the exercise in this instructional material so as to integrate the skill learning with the procedural practical steps given in the exercise. The instructional videos will improve the quality of standard on practical training and will motivate the trainees to focus and perform the skill seamlessly.

IMPs also deals with the complex skills required to be developed for effective team work. Necessary care has also been taken to include important skill areas of allied trades as prescribed in the syllabus.

The availability of a complete Instructional Media Package in an institute helps both the trainer and management to impart effective training.

The IMPs are the outcome of collective efforts of the staff members of NIMI and the members of the Media Development Committees specially drawn from Public and Private sector industries, various training institutes under the Directorate General of Training (DGT), Government and Private ITIs.

NIMI would like to take this opportunity to convey sincere thanks to the Directors of Employment & Training of various State Governments, Training Departments of Industries both in the Public and Private sectors, Officers of DGT and DGT field institutes, proof readers, individual media developers and coordinators, but for whose active support NIMI would not have been able to bring out this materials.

Chennai - 600 032 **EXECUTIVE DIRECTOR**

© NIMI NOT TO BE REPUBLISHED

ACKNOWLEDGEMENT

National Instructional Media Institute (NIMI) sincerely acknowledges with thanks for the co-operation and contribution extended by the following Media Developers and their sponsoring organisation to bring out this IMP **(Trade Practical)** for the trade of **Mechanic Electric Vehicle 1st Year - NSQF Level - 4 (Revised 2022)** under the **Automotive** Sector for ITIs.

MEDIA DEVELOPMENT COMMITTEE MEMBERS

Shri. A. Thangavelu	-	Asst. Training Officer (Retd.,), Govt. I.T.I, Chennai.
A.Muthuvel	-	Junior Training Officer, Govt. I.T.I, Nagapatinam

NIMI COORDINATORS

Shri. Nirmalya Nath	-	Deputy Director, NIMI, Chennai - 32.
Shri. S. Gopala Krishnan	-	Assistant Manager, NIMI, Chennai - 32.

NIMI records its appreciation of the Data Entry, CAD, DTP Operators for their excellent and devoted services in the process of development of this Instructional Material.

NIMI also acknowledges with thanks, the invaluable efforts rendered by all other staff who have contributed for the development of this Instructional Material.

NIMI is grateful to all others who have directly or indirectly helped in developing this IMP.

© NIMI NOT TO BE REPUBLISHED

INTRODUCTION

TRADE PRACTICAL

The trade practical manual is intented to be used in workshop . It consists of a series of practical exercises to be completed by the trainees during the two years course of the **Mechanic Electric Vehicle 1st Year Trade Practical** in **Automotive** trade supplemented and supported by instructions/ informations to assist in performing the exercises. These exercises are designed to ensure that all the skills in compliance with NSQF Level - 4 (Revised 2022)

This manual is divided into Ten modules. The Ten modules are given below

Module 1	**Workshop safety practice**
Module 2	**History of Automobiles**
Module 3	**Basic electrical and electronics**
Module 4	**Electric Vehicle Technology**
Module 5	**Hand and power tools**
Module 6	**Basic of AC & DC and Electrical cable**
Module 7	**Maintenance of automobile electrical components**
Module 8	**Automotive wiring and Electrical accessories**
Module 9	**Electric vehicle safety systems**
Module 10	**Automotive basic electricity**

The skill training in the shop floor is planned through a series of practical exercises centred around some practical project. However, there are few instances where the individual exercise does not form a part of project.

While developing the practical manual a sincere effort was made to prepare each exercise which will be easy to understand and carry out even by below average trainee. However the development team accept that there is a scope for further improvement. NIMI looks forward to the suggestions from the experienced training faculty for improving the manual.

© NIMI NOT TO BE REPUBLISHED

TRADE THEORY

The manual of trade theory consists of theoretical information for the two years course of the **Mechanic Electric Vehicle** in **Automotive** Trade. The contents are sequenced according to the practical exercise contained in the manual on Trade Theory. Attempt has been made to relate the theoretical aspects with the skill covered in each exercise to the extent possible. This co-relation is maintained to help the trainees to develop the perceptional capabilities for performing the skills.

The trade theory has to be taught and learnt along with the corresponding exercise contained in the manual on trade practical. The indications about the corresponding practical exercises are given in every sheet of this manual.

It will be preferable to teach/learn the trade theory connected to each exercise at least one class before performing the related skills in the shop floor. The trade theory is to be treated as an integrated part of each exercise.

The material is not for the purpose of self learning and should be considered as supplementary to class room instruction.

CONTENTS

Lesson No.	Title of the Exercise	Learning Outcome	Page No.
	Module 1: Workshop safety practice		
1.1.01	Practice on identify the tools & machinery used in the trade		1
1.1.02	Safety attitude development and use of personal Protective Equipments		4
1.1.03	Practice on basic first aid to injured victim		6
1.1.04	Practice on Safe disposal of workshop waste materials	1	11
1.1.05	Practice on identify the hazard and avoidance of hazard		13
1.1.06	Practice on identification of safety signs		14
1.1.07	Practice on preventive measures for electrical accidents		16
1.1.08	Practice on use of fire fighting equipments and fire extinguishers		18
1.1.09	Practice on precautionary method of working in fitting jobs		21
1.1.10	Practice on safe use of tools and equipment used in the trade		22
	Module 2: History of Automobiles		
1.2.11	Practice on Comparison of Commercial and Passenger Vehicle		23
1.2.12	Practice on Classification of vehicle based on various categories		25
1.2.13	Practice on Identifying the car body styles and the reason behind	2	27
1.2.14	Practice on Identification of vehicle information number and vehicle specification		28
1.2.15	Practice on prepare a report to show differences between two vehicle		31
	Module 3: Basic electrical and electronics		
1.3.16	Practice on crimping and joining wires		33
1.3.17	Practice on Measuring of current, Voltage and resistance by using digital multimeter		37
1.3.18	Practice on Continuity test for fuses, jumper wires, fusible links and circuit breakers		41
1.3.19	Practice on identify and diagnose the various electrical circuits	2-3	43
1.3.20	Practice on measure the voltage drop in a circuit		46
1.3.21	Practice on measure current flow in head light circuit		47
1.3.22	Practice on testing of solenoid, relay and its circuit		49
1.3.23	Practice to identify and check the power & signal connectors		51
1.3.24	Practice on identify and test different types of diodes		55
1.3.25	Practice on Check the functionality of NPN & PNP transistor		57
1.3.26	Identify various power MOSFETs by its number and test by using multimeter		59
1.3.27	Practice to construct and test the logic gates		62
1.3.28	Practice on construct a electrical circuit with temperature and pressure sensors		65
1.3.29	Practice on construct a pulswidth modulation generator		67
	Module 4: Electric Vehicle Technology		
1.4.30	Practice on identify and test the different types of diodes	4	69
1.4.31	Measure voltage and current by using clamp meter		72
1.4.32	Practice on identify and test different types of transistors		76
1.4.33	Practice on the study of Electric vehicle current adoption status	5	80
1.4.34	Practice on identify and study performance of electric vehicle		83
1.4.35	Practice to identify the basic components of electric vehicle		85
1.4.36	Identify the various gauges/instruments on dash board of an electric vehicle		87

© NIMI NOT TO BE REPUBLISHED

Lesson No.	Title of the Exercise	Learning Outcome	Page No.
1.4.37	Practice to electric vehicle motor power calculation		90
1.4.38	Practice on Electric vehicle‘s traction motor selection		92
1.4.39	Practice on study and hands of electric vehicle transmission		94
1.4.40	Practice to identify the basic components of electric vehicle		96
1.4.41	Practice on calculation of traction motor effort		98
1.4.42	Practice on check the voltage of E.V chopper circuit		101
1.4.43	Practice on test the amplifier output torque and efficiency		104
1.4.44	Practice on traction motor’s bearing and stator winding replacement	5	108
1.4.45	Practice on identify the various automobile systems		110
1.4.46	Comparative analysis on body over chassis and Monocoqu body of a vehicle		113
1.4.47	Practice to identify the external and internal vehicle body and components and their functions		115
1.4.48	Practice to draw sketches to show the functions of E.V’s components		118
1.4.49	Practice to identify the power train and its types		119
1.4.50	Practice on identification of transmission and driveline components		121
1.4.51	Practice on identification of steering system components		126
1.4.52	Practice on identify the suspension system components		128
1.4.53	Practice on identify the disc and drum brake components		131
	Module 5: Workshop hand and Power tools		
1.5.54	Measure practice to wheelbase of a vehicle		133
1.5.55	Practice on removing wheel lug nuts		135
1.5.56	Practice on handling the general workshop hand and power tools	5	136
1.5.57	Check tyre air pressure		147
1.5.58	Practice on loosening and tightening of various screws, nuts and bolts		150
	Module 6: Basics of AC & DC Electricity Principles		
1.6.59	Identify the phase, neutral and earth on power socket		151
1.6.60	Construct a test lamp and use it to check mains healthiness		152
1.6.61	Measure the voltage between phase and ground and rectify earthing		153
1.6. 62	Identify and test different AC mains cables		154
1.6.63	Prepare terminations, skin the electrical wires / cables using wire stripper and cutter		156
1.6.64	Measure the gauge of the wire using SWG and outside micrometer	6	160
1.6.65	Practice on refer table and find current carrying capacity of wires		163
1.6.66	Practice on crimp the lugs to wire end		165
1.6.67	Measure AC and DC voltages using multimeter		168
1.6.68	Practice on jointing wire by using soldering and measuring voltage, currents & resistance		170
1.6.69	Practice to check the electrical circuits		174
	Module 7: Diagnose,repair and maintenance of automobile electrical power supply system		
1.7.70	Practice on study about new battery limiting factors, fault and testing	7	180

© NIMI NOT TO BE REPUBLISHED

Lesson No.	Title of the Lesson	Learning Outcome	Page No.
1.7.71	Practice on identify the electrical and electronics components on Electric Vehicle		185
1.7.72	Practice on removing and refitting a mechanical electrical and trim components		187
1.7.73	Practice on identify the electric vehicle signaling system gauges & meters		190
1.7.74	Practice on fault diagnosis on electrical wiring harness of Electric Vehicle		192
1.7.75	Practice on identify the switches and steering lock cum ignition switch		194
1.7.76	Practice on identify the combination, fascia, head lamp leveling switch		197
1.7.77	Practice on identify the hazard,window winding,HVAC control panel switch and steering wheel switch		199
1.7.78	Practice on remove and re-install the power door lock of a car		201
	Module 8: Automotive wiring and electrical accessories		
1.8.79	Practice on identify wire gauge based on current capacity of wire		206
1.8.80	Practice on the fuse for circuit protection		208
1.8.81	Practice on diagnose fault and carry out remedial actions of horns, wiper motor and power window	8	209
1.8.82	Practice on use personal and shop safety procedures		212
1.8.83	Practice on to operate the equipment according to safety protocols		214
1.8.84	Practice to identify the components location on the wiring diagram		216
	Module 9: Electric vehicle safety system		
1.9.85	Practice to identify the power source, ground connection and controls using in a wiring circuits		217
1.9.86	Practice to disconnect and connect the interlock loops of E.V		219
1.9.87	Practice to identify the wire thickness, stripping and crimping of wire	9	220
1.9.88	Practice on diagnose, repair and test the converter of electric vehicle		223
1.9.89	Practice on check inverter assembly of electric vehicle		225
1.9.90	Practice on use a scan tool for fault finding in electrical vehicle		227
1.9.91	Practice on dismantling and assembling of vehicle components		229
1.9.92	Practice on use a hand and power tools on various nuts ,bolts and screws	10	236
	Module 10: Automotive basic electricity		
1.10.93	Practice on measuring voltage drop in a electrical circuit		240
1.10.94	Practice on identify and interpret electrical system of Electrical Vehicle		242
1.10.95	Practice on measuring of circuit voltage ampere resistance		244
1.10.96	Practice on testing fuses and relays in a electrical circuit		246
1.10.97	Practice on brazing wires		247
1.10.98	Practice on soldering wires	10	250
1.10.99	Practice on check and identify the power and signal connectors		252

© NIMI NOT TO BE REPUBLISHED

LEARNING / ASSESSABLE OUTCOME

On completion of this book you shall be able to

Sl.No.	Learning Outcome	Exercise No
1	Identify and handle different types of tools and workshop equipment in the Auto workshop following safety precautions. (NOS: ASC/N1435)	1.1.01 - 1.1.10
2	Check, identify and interpret different types of vehicles and their specifications. (NOS: ASC/N1435)	1.2.11 - 1.2.15
3	Identify the electrical circuits and test their parameters by using electrical measuring instruments, and the basic electronic circuits and analyse their circuit functioning. (NOS: ASC/N1435)	1.2.16 - 1.3.29
4	Identify and study of Electric vehicle components and Performance comparison of EV and IC engine vehicles. (Components of Electric Vehicle such as Motor, Motor Controller, Battery Pack, Battery Management System, Charging System etc.) (NOS: ASC/N1435)	1.4.30 - 1.4.44
5	Check the automobile systems and sub-systems such as power train, chassis, transmission system, different suspension systems, tyres & wheels (Functions, tyre marking, Tyre Designs), body engineering systems, Safety System etc. and operate garage equipment. (NOS: ASC/N1435, ASC/N1436)	1.4.45 - 1.5.58
6	Trace and Test all Electrical, Electronic components & circuits and assemble circuit to ensure functionality of system. (NOS: ASC/N1435)	1.6.59 - 1.6.69
7	Diagnose, repair and perform maintenance of automobile electrical components & general vehicle architecture. (NOS: ASC/N1435, ASC/N1437)	1.7.70 - 1.7.78
8	Perform checking and troubleshooting of wiring circuits - HV and LV and the electrical components in the electric vehicle. (NOS: ASC/N1435, ASC/N1437)	1.8.79 - 1.8.84
9	Dismantle, diagnose & rectify the defects in vehicle and assemble the vehicle components to ensure functionality of vehicle. (NOS: ASC/N1435, ASC/N1437)	1.9.85 - 1.9.90
10	Read and apply engineering drawing for different application in the field of work (NOS: ASC/N9420)	1.9.91 - 1.10.99

© NIMI NOT TO BE REPUBLISHED

SYLLABUS - MECHANIC ELECTRIC VEHICLE			
FIRST YEAR			
Duration	**Reference Learning Outcomes**	**Professional Skills (Trade Practical) With Indicative Hours**	**Professional Knowledge (Trade Theory)**
Professional Skill 50 Hrs.; Professional Knowledge 10 Hrs.;	Identify and handle different types of tools and workshop equipment in the Auto workshop following safety precautions. (NOS: ASC/N1435)	1. Importance of trade training, List of tools & Machinery used in the trade. (05 hrs) 2 Safety attitude development of the trainee by educating them to use Personal Protective Equipment (PPE). (05 hrs) 3 First Aid Method and basic training. (05 hrs) 4 Safe disposal of waste materials like cotton waste, metal chips/ burrs etc. (05 hrs) 5 Hazard identification and avoidance. (05 hrs) 6 Safety signs for Danger, Warning, caution & personal safety message. (05 hrs) 7 Preventive measures for electrical accidents & steps to be taken in such accidents. (05 hrs) 8 Use of Fire extinguishers. (07 hrs) 9 Practice and understand precautions to be followed while working in fitting jobs. (05 hrs) 10 Safe use of tools and equipment used in the trade. (03 hrs)	All necessary guidance to be provided to the newcomers to become familiar with the working of Industrial Training Institute system including stores procedures. Soft Skills, its importance and Job area after completion of training. Importance of safety and general precautions observed in the in the industry/ shop floor. Introduction of First aid. Operation of electrical mains and electrical safety. Introduction of PPEs. Response to emergencies e.g.; power failure, fire, and system failure. Importance of housekeeping & good shop floor practices. Introduction to 5S concept & its application. Occupational Safety & Health: Health, Safety and Environment guidelines, legislations & regulations as applicable. Basic understanding on Hot work, confined space work and material handling equipment. (10 Hrs)
Professional Skill 50 Hrs.; Professional Knowledge 10 Hrs.	Check, identify and interpret different types of vehicles and their specifications. (NOS: ASC/N1435)	11 Demonstrate the Comparison among commercialand passenger vehicle such as decision making in finding the driving wheels in both cases. (05 hrs) 12 Demonstration and Classification of vehicles based on various categories such as Body Type, Load, Fuel used, Power source used, no. of wheels, transmission used, Placement & position of engine, transmission & Steering system, no. of axles, braking system used, differential & final reduction etc. (10 hrs) 13 Demonstration on identifying the car body styles and the reason behind. (15 hrs)	Study of automobiles, History of Automobile, Evolution and growth of the Industry, Key Automobile Companies and their Products. Brief description of components and their locations. Study the Classification of Automobiles based on various aspects and determining the reason (Commercial, Passenger), Product Segments (Criteria for Vehicle Types, Variants and Versions, Markets: India, EU and US). Introduction and uses of Vehicle hoists – brief introduction Two post and four post hoist, Engine hoists, mechanical Jacks, Hydraulic jacks, Stands etc. (10 Hrs)

© NIMI NOT TO BE REPUBLISHED

		14 Demonstration of vehicle specification. Identification of vehicle information Number. (10hrs) 15 Study two different vehicles and prepare a report to show differences between these two vehicles. (10 hrs)	
Professional Skill 75 Hrs; Professional Knowledge 15 Hrs	Identify the electrical circuits and test their parameters by using electrical measuring instruments, and the basic electronic circuits and analyse their circuit functioning. (NOS: ASC/N1435)	16 Practice in joining wires using soldering Iron, Construction of Simple electrical circuits, Crimping of connectors. (10 hrs) 17 Measuring of current, voltage and resistance using digital multimeter, practice. (10 hrs) 18 Continuity test for fuses, jumper wires, fusible links, circuit breakers. (05 hrs) 19 Identify and Diagnose series, parallel, series- parallel circuits using Ohm's law, Check electrical (05 hrs) 20 Prepare circuit with a test lamp, perform voltage drop test in circuits using multimeter. (05 hrs) 21 Measure current flow using multimeter /ammeter, use of service manual wiring diagram for troubleshooting. (10 hrs) 22 Testing of relay and solenoids and its circuit. (05 hrs) 23 Identify and test power and signal connectors for continuity. (03 hrs) 24 Identify and test different type of Diodes. (04 hrs) 25 NPN & PNP Transistors for its functionality. (03 hrs) 26 Difference between MOSFET and IGBT. (03 hrs) 27 Construct and test simple logic circuits OR, AND & NOT and Logic gates using switches. (04 hrs) 28 Construct circuit to read temperature and pressure sensor. (04 hrs) 29 Construct PWM generator. (04 hrs)	Basic electricity: Electricity principles, Ground connections, Ohm's law, Voltage, Current, Resistance, Power, Energy. Voltmeter, ammeter, Ohmmeter Mulitmeter, Conductors & insulators, Wires, Shielding, Length vs. resistance, Resistor ratings. Capacitors and Coils Fuses & circuit breakers, Ballast resistor, Stripping wire insulation, cable colour codes and sizes, Resistors in Series circuits, Parallel circuits and Series-parallel circuits, Electrostatic effects, Capacitors and its applications, Capacitors in series and parallel Cells in series and parallel Magnetic effects, Heating effects, Thermo-electric energy, Thermistors, Thermo couples, Electrochemical energy, Photovoltaic energy, Piezoelectric energy, Electromagnetic induction, Relays, Solenoids, Primary & Secondary windings, Transformers, stator and rotor coils. Basic electronics: Electrical and Electronic Components: - Switches Description of Normally open, Normally closed, single pole single throw switch (SPST), ganged, and mercury switches used in Automobile circuit. Description of Relay, ISO Relays, Solenoids, Buzzers. Resistors- Description of different type of resistors and their colourcodes. - Fixed, stepped, and variable resistors Rheostat, Potentiometer. Description of Diodes, Diode identification and ratings, zener diodes, Avalanche diodes, Light emitting diodes, photo diodes and clamping diodes. Transistors- Description of NPN, PNP, field-effect, transistor (FET), IGBT, phototransistors. Description of Integrated circuits.

© NIMI NOT TO BE REPUBLISHED

			Circuit protection Devices- Description of fuses, different type of fuses- glass or ceramic, blade and bullet or cartridge fuses. Fusible links, maxi fuses, circuit breaker, Positive Temperature coefficient (PTC) resistor device Logic gates-OR, AND & NOT and Logic gates using switches. Input and Output Interfacing. PWM Generation. (15 Hrs)
Professional Skill 140 Hrs.; Professional Knowledge 25 Hrs.	Identify and study of Electric vehicle components and Performance comparison of EV and IC engine vehicles. (Components of ElectricVehicle such as Motor, Motor Controller, Battery Pack,Battery Management System, Charging System etc.) (NOS: ASC/ N1435)	30 Identify and test different types of diodes. (05 hrs) 31 Practice using digital meters such as power analyzer AC DC clamp meters, Lux meters. (10 hrs) 32 Test and identify different types of transistors. (10 hrs) 33 Study report on current adoption status of BEV, HEV, PHEV, FCEV type vehicles. (15 hrs) 34 Identify and study performance of Electric vehicles, in comparison to IC engine vehicles. (05 hrs) 35 Identification and study of basic components of EV (05 hrs) 36 Identify various gauges/ instrument on dashboard of an electric vehicle and identify differences in instrumentation panel with IC engine vehicle. (10 hrs) 37 Basic motor power calculation. (10 hrs) 38 Selection,sizing and haracteristic of motor. (10 hrs) 39 Study and hands on of electric transmission. (10hrs) 40 Identification of components specific to EV and how they are in comparison to IC engine-based vehicle. (10 hrs) 41 Calculation of motor effort. (10 hrs) 42 Check the proper voltage, various practical work related to chopper circuit. (10 hrs) 43 Testing of amplifier, output torque, efficiency testing at different condition. (10 hrs) 44 Practice and hands on Bearing replacement,greasing, replacing the copper windings on stator. (10 hrs)	Introduction to Electric Vehicle Technology, EV Terminology Comparison of Electric Vehicle with IC engine vehicle based on emissions, range, fuel type. Types of electric vehicle, BEV, HEV, PHEV and FCEV. Architecture of Electric Vehicle, working principle of fully electric vehicle, Major component, performance parameter, Basics of Motors, Selection, sizing and characteristic of Motor, calculation for motor effort, electric transmission. Principle, working and operation of propulsion system, DC Motor - Drives Armature Voltage, chopper circuit, step up, Step down chopper, control strategy, chopper amplifier. Brushless DC Motor – principle working, features, speed control system of brushless DC motor, efficiency, calculation. (25 Hrs)

© NCERT NOT TO BE REPUBLISHED

Professional Skill 150 Hrs.; Professional Knowledge 30 Hrs.	Check the automobile systems and sub-systems such as powertrain, chassis, transmission system, different suspension systems, tyres & wheels (Functions, tyre marking, tyre Designs), body engineering systems, safety system etc. and operate garage equipment. (NOS: ASC/N1435, ASC/N1436)	45 Demonstration on Identification of Various Automobile systems and subsystems. (12 hrs) 46 Comparative analysis on body over chassis & Monocoque body. (09 hrs) 47 Practical to identify the External and Internal Body Components and their Functions. (09 hrs) 48 Draw suitable sketches to show functions of various components. (10 hrs) 49 Demonstration on Identification of powertrain & its type. (10 hrs) 50 Demonstration on Identification of transmission & driveline components. (14 hrs) 51 Demonstration on Identification of Steering systems. (10 hrs) 52 Demonstration on Identification of suspension systems. (14 hrs) 53 Demonstration on Identification of disc and drum brakes, warning & safety devices. (12 hrs) 54 Practice to measure a wheelbase of a vehicle with measuring tape. (10 hrs) 55 Practice to remove wheel lug nuts with use of an air impact wrench. (10 hrs) 56 Practice on General workshop tools & power tools. (10 hrs) 57 Practice to check the air pressure inside the vehicle tires is maintained at the recommended setting. (10 hrs) 58 Practice on loosening and tightening of various screws, nuts and bolts using tools. (10 hrs)	Functional Introduction to various automotive systems and sub systems. Power Train: Introduction to engines and its types, transmission and driveline systems. Chassis System: Chassis and Monocoque body, Steering Systems, Suspension System(Its functions & different components, different types like Double Wishbone, trailing twist axle suspension, Macpherson Srut suspension, etc), Brakes etc. Functions of Tyres and Wheels, Introduction to JATMA/ ATMA/ ETRTO standards, Tyres and Wheels markings. Tyre selection considerations for automobile, Tyre Designs- Diagonal vs Radial Ply, Tubed vs Tubeless, Wheel Alignment. Body Engineering: Styling, Exterior, Interior, trims etc. Vehicle Integration: DMU, Ergonomics, Layout and Packaging studies. Marking scheme, Marking material-chalk, Prussian blue. Cleaning tools- Scraper, wire brush, Emery paper, Description, care and use of Surface plates, steel rule, measuring tape, try square vacuum gauge, tire pressure gauge. Details of various types of marking and cutting tools- punch, scriber, hammer and mallets, hack saw frame and blade, chisels Threads-thread categorization- types of threads- types of screwed joints-types of nuts- property classes of bolts- screw locking arrangements-types and description of screwing tools. (30 Hrs)
Professional Skill 100 Hrs.; Professional Knowledge 20 Hrs.	Trace and Test all Electrical, Electronic components & circuits and assemble circuit to ensure functionality of system. (NOS: ASC/N1435)	59 Identify the Phase, Neutral and Earth on power socket, use a tester to monitor AC power. (09 hrs) 60 Construct a test lamp and use it to check the health of mains. (09 hrs) 61 Measure the voltage between phase and ground and rectify earthing. (05 hrs) 62 Identify and test different AC mains cables. (05 hrs)	Basics of AC & DC. Various terms such as +ve cycle, -ve cycle, Frequency, Time period, RMS, Peak, Instantaneous value. Single phase and Three phase supply. Terms like Line and Phase voltage/ currents. Insulators, conductors and semiconductor properties. Different type of electrical cables and their Specifications. Types of wires & cables, standard wire gauge (SWG).

© NIMI NOT TO BE REPUBLISHED

		63 Prepare terminations, skin the electrical wires /cables using wire stripper and cutter. (08 hrs) 64 Measure the gauge of the wire using SWG and outside micrometer. (09 hrs) 65 Refer table and find current carrying capacity of wires. (05hrs) 66 Crimp the lugs to wire end. (05 hrs) 67 Measure AC and DC voltages using multi meter (10 hrs) 68 Practice in joining wires using soldering Iron, Construction of simple electrical circuits, measuring of current, voltage and resistance using digital multimeter, practice continuity test for fuses, jumper wires, fusible links, and circuit breakers (16 hrs) 69 Diagnose series, parallel, series-parallel circuits using Ohm's law, check electrical circuit with a test lamp, perform voltage drop test in circuits using multimeter, measure current flow using multimeter /ammeter, use of service manual wiring diagram for troubleshooting. (19 hrs)	Classification of cables according to gauge (core size), number of conductors, material, insulation strength, flexibility etc. Basics of electricity, Electricity principles, Ground connections, Ohm's law, Voltage, Current, Resistance, Power, Energy. Voltmeter, ammeter, Ohmmeter, Multimeter, Conductors & insulators, Wires, Shielding, Length vs. resistance, Resistor ratings. Fuses & circuit breakers, Ballast resistor, Stripping wire insulation, cable color codes and sizes, Resistors in Series circuits, Parallel circuits and Series-parallel circuits, Electrostatic effects, Capacitors and its applications, Capacitors in series and parallel. (20 Hrs)
Professional Skill 125 Hrs.; Professional Knowledge 20 Hrs.	Diagnose, repair and perform maintenance of automobile electrical components & general vehicle architecture. (NOS: ASC/N1435, ASC/ N1437)	70 Carry out study about new types of battery and suggest improvements to the main limiting factors to batteries, battery fault, battery testing. (10 hrs) 71 Familiarization of electrical and electronics components on vehicle (10 hrs) 72 Hands on removing and fitting basic mechanical, electrical and trim components. (15 hrs) 73 Instrumentation and signaling system Gauges & Meters: Mandatory & additional gauges, Engine/ Motor temperature gauge, Charging gauge,Speedometer, Tachometer diagnostics (15 hrs) 74 Perform fault diagnosis on electrical wiring harness. (20 hrs) 75 Familiarization and Types & Classification of Switches,	Introduction to automobile electrical architecture & power supply systems, Nomenclature of auto electrical systems, Typical layouts. General vehicle Architecture System Understand basic circuit diagrams and symbols Instrument Cluster: Different types, Tell-Tales. Electrical Distribution System: Wire, Fuse, Relay etc. selection process, Voltage, Drop Analysis, Grounding and Splicing Strategy Wiring Harness Design: Harness Topology. Familiarization and Types & Classification of Switches. Diagnostics, fault finding and Root cause analysis for electrical system. (20 Hrs)

© NIMI NOT TO BE REPUBLISHED

		Steering lock cum ignition switch. (15 hrs) 76 Combi Switch, Fascia switches, Headlamp levelling switch, mirror adjustment switches, Front & Rear fog lamp switches. (20 hrs) 77 Hazard switch, Window winding switch, Heated rear window switch, HVAC Control panel switches, Steering wheel switches. (10 hrs) 78 Remove and install power door lock and tracing the circuit. (10 hrs)	
Professional Skill 50 Hrs.; Professional Knowledge 10 Hrs.	Perform checking and troubleshooting of wiring circuits - HV and LV and the electrical components in the electric vehicle. (NOS: ASC/N1435, ASC/N1437)	79 Identify Wire Gauge required based on Current Capacity. (04 hrs) 80 Select Fuse for circuit protection. (04 hrs) 81 Diagnose and carry out remedial action as per the OEM Manual - Horns, Wiper Motor, Power Windows. (04 hrs) 82 Discuss and demonstrate personal and shop safety procedures and use appropriate attire and protective equipment. (05 hrs) 83 Operate equipment according to safety protocols and identify tools, tests equipment and service procedures used in the servicing of EV and HEV's. (05 hrs) 84 Practice to identify components and their locations indicated on the wiring diagram. (04 hrs)	Wiring and circuit diagrams Automotive Wiring- difference between primary wiring and secondary wiring. Comparison between solid and stranded primary wire. Description of wire size- Metric and American wire gauge (AWG), Importance of ground straps used in automotive wiring. Description of different type of terminals and connectors Molded, multiple-wire hard shell, bulkhead, weather- pack, metri-pack, heat- shrink covered butt connectors. Importance of printed circuit boards, wiring harnesses, wiring diagrams and color codes and circuit numbering. Study of common electrical and electronic symbols used in wiring diagrams Accessories: Horn circuit, wiper circuit, power window components and circuit. Power door lock circuit, automatic door lock circuit, remote keyless entry system circuit, antitheft system, immobilizer system. Navigation system, Car infotainment system, car videos. (05 hrs)
		85 Practice to identify the power source, ground connection, and controls for electrical circuits using a wiring diagram. (04 hrs) 86 Explain vehicle safety systems' including disconnects; interlock loops etc. (04 hrs) 87 Identification of Wire Thickness using wire Gauge, Stripping & Crimping of wire. (04 hrs)	Description and function of Airbags, Seatbelt, Vehicle safety systems, Crash sensors, Seat belt pre- tensioners, Tire pressure monitoring systems, Integrated communications, Proximity sensors, Reflective displays, Global positioning satellites, Triangulation/ trilateration, Telematics.

© NIMI NOT TO BE REPUBLISHED

		88 Diagnose, repair, and test DC/ DC converters. (04 hrs) 89 Check Inverter Assembly. (04 hrs) 90 Use Scan Tool. (04 hrs) controls for electrical circuits using a wiring diagram. (04 hrs) 86 Explain vehicle safety systems' including disconnects; interlock loops etc. (04 hrs) 87 Identification of Wire Thickness using wire Gauge, Stripping & Crimping of wire. (04 hrs) 88 Diagnose, repair, and test DC/ DC converters. (04 hrs) 89 Check Inverter Assembly. (04 hrs) 90 Use Scan Tool. (04 hrs)	Application of Automotive bus system- currently used in cars: CAN (Control Area Network), LIN (Local Interconnect Network), FlexRay™ and MOST (Media Oriented Systems Transport)., Importance of E/E Architecture. High Voltage Elements - PDU, Voltage Converters, Switching Devices, HV - Diagnostics and Troubleshooting, HV Cabling - Repair, Safety Certification, HVIL, Isolation Testing Power Electronics - Inverter and Voltage Converters, Introduction to Scan Tool and reading vehicle diagnostics. (05 Hrs)
Professional Skill 100 Hrs.; Professional Knowledge 20 Hrs.	Dismantle, diagnose & rectify the defects in vehicle and assemble the vehicle components to ensure functionality of vehicle. (NOS: ASC/ N1435, ASC/N1437)	91 Hand on assemble and disassembly of several vehicle components as per vehicle manual. (20 hrs) 92 Study of various screws, nuts and bolts and hands on how to use both power tools and hand tools for disassembly. (10 hrs) 93 Check measuring of voltage drop. (05 hrs) 94 Identify and interpret electrical system concern. (15 hrs) 95 Perform measuring of circuit voltage, ampere and resistance. (05 hrs) 96 Practice on testing fuses and relays. (15 hrs) 97 Practice on Brazing wires. (10 hrs) 98 Practical on soldering wires. (10 hrs) 99 Check, Perform practical, identify and test power and signal connectors for continuity. (10 hrs)	Understanding Assembly and disassembly processes from vehicle manual. Thread categorization- types of threads- types of screwed joints- types of nuts- property classes of bolts- screw locking arrangements- types and description of screwing tools. General principles of electrical engineering- structure of atoms- voltage- current- fuses- electrical conduction- current direction- types of current- voltage drop- resistance- PTC and NTC resistors- types of resistors- ohm's law- resistor circuits- electro magnetism- electromagnetic induction solenoids - description of multimeter- function and types of relays- semiconductors. (20 Hrs)

© NIMI NOT TO BE REPUBLISHED

© NIMI
NOT TO BE REPUBLISHED

Practice on identify the tools & machinery used in the trade

Objectives: At the end of this exercise you shall be able to
- **know the importance of trade training**
- **identify the tools used in the trade**
- **identify the machineries used in the trade.**

Requirements

Tools/Instruments

- Trainee's tool kit - 1 No.
- ITI Layout chart - 1 No.

Equipments/Machineries

- Electric bench grinder - 1 No.
- Air compressor - 1 No.
- Jib Crane - 1No.
- Drilling machine - 1 No.
- Battery charger - 1 No.
- Wheel balancer - 1 No.
- Electric Vehicle - 1 No.

Materials

- Cotton waste - as reqd.
- Soap Oil - as reqd.

PROCEDURE

TASK 1: **Importance of the trade training.**

Note: Instructor should be follow the steps to give the training to the trainee.

1 Take all trainee's to visit all sections of your I.T.I and explain about the nature of training given in each section.

2 Explain about I.T.I organization structure and I.T.I staffs.

3 Explain about facilities available in I.T.I.

4 Explain about the importance of mechanic Electrical Vehicle trade training.

5 Explain about the trade syllabus and job opportunities in automobile sector.

6 Explain about I.T.I timing and discipline to be followed during training hours.

7 Instructor should be give the information about telephone number of the I.T.I office, nearest hospital, police station and nearest fire station.

8 Instructor should be give information about nearest land marks like post office, Railways station, Bus stop and their approximate distance from the I.T.I.

9 Trainees should be collect all information given by his instructor and note it on his note book for emergency use.

10 Note down the I.TI. rules and regulation followed in your training institute in Table 1.

© NIMI NOT TO BE REPUBLISHED

Table 1

S. No	Rules and Regulation of Institute	Remarks
1		
2		
3		
4		
5		

— — — — — —

TASK 2: **Introduction to the workshop machineries and equipments**

1 Take the participants around the workshop.

2 Identify the major workshop machinery like compressor, drilling machines, jib crane, welding machine, grinder.

3 Explain the constructional features and the use of the machineries in the shop.

4 Explain the use of equipments and its applications.

5 Explain bench drilling machine, pillar drilling machine.

6 Explain through display charts, the features of all equipments in an automobile workshop.

Air compressor (Fig 1)

Compressor is an equipment to produce compressed air at required pressure through air hoses.

Fig 1

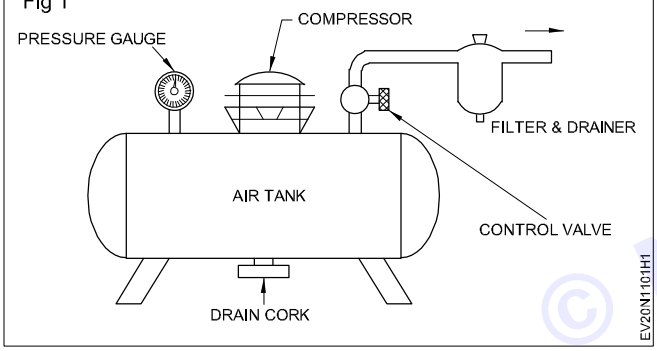

Jib Crane (Fig 2)

Jib crane is used to transport the objects, from one place to another shop floor.

Fig 2

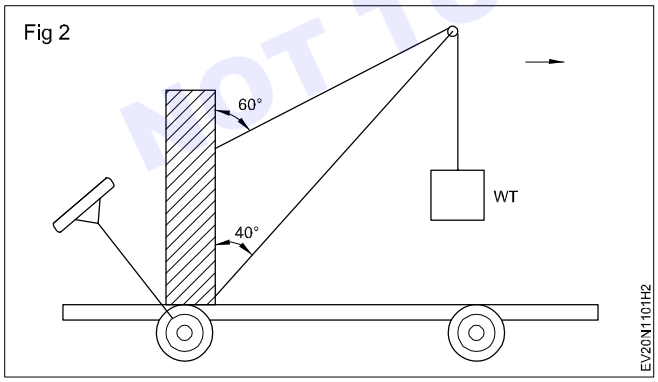

Sensitive bench drilling machine (Fig 3).

Drilling Machine

This machine is capable of drilling holes up to 12.5 mm diameter. The drills are fitted in the chuck or directly in the tapered hole of the machine spindle.

For normal drilling, the work-surface is kept horizontal. If the holes are to be drilled at an angle, the table can be tilted.

Fig 3

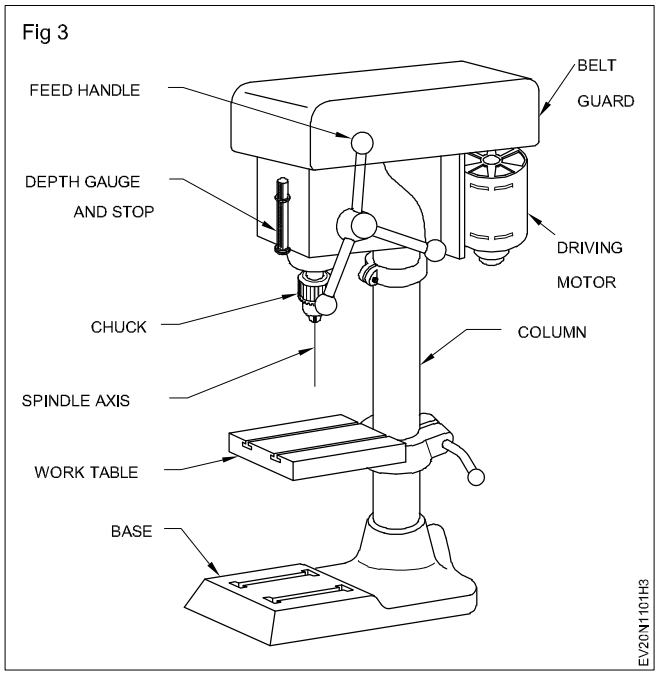

Wheel balance (Fig 4)

The extent of imbalance is worked out and a balance weight of the same is fixed in appropriate place of the rim as indicated by the balance machine.

Note: Safety shield is pull down to cover the before unit is started. This stops stones and wheel weights which can fly off with lethal force.

Fig 4

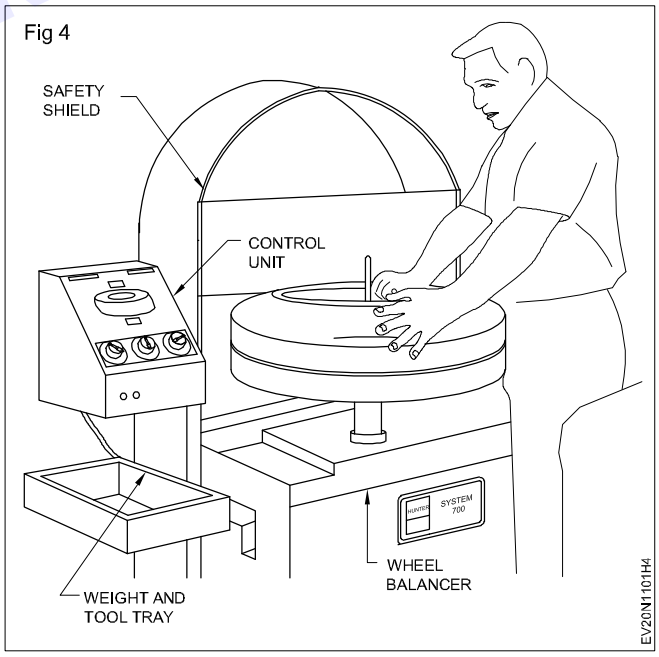

© NIMI NOT TO BE REPUBLISHED

Table 1

Ask the trainees to write the workshop equipments name in table-1

S.No.	Equipment Name	Use of the equipment	Remarks
1			
2			
3			
4			
5			
6			

— — — — — —

TASK 3: **Identify the workshop tools**

Note: Instructor should be layout the workshop tools on the workbench and explain about the use of each tools in electrical vehicle repair works.

1 Trainee's has to be note the workshop tools name and its use in the following Table 1 and get it checked by your instructor.

Table 1

S.No	Tools Name	Tools Use	Remarks
1			
2			
3			
4			
5			
6			
7			
8			
9			
10			

© NIMI NOT TO BE REPUBLISHED

— — — — — —

Safety attitude development and use of personal Protective Equipments

Objectives: At the end of this exercise you shall be able to
- **identify the Personal Protective Equipments (PPE)**
- **interpret the different type of PPE and its uses.**

Requirements

Tools/Instruments
- PPE Chart - 1 No.
- PPE instruction chart - 1 No.

Equipments/Machineries
- PPE visual display unit - 1 No.
- PPE Set - 1 No.

PROCEDURE

TASK 1: **Personal Protective Equipments (Fig 1)**

Fig 1

Note: The instructor may provide or arrange the different types of personal protective equipment or chart and explain how to identify and select the PPE devices suitable for the work.

1 Read and interpret the personal protective equipments by visually on real devices or from the charts.

2 Identify and select the personal protection equipment used for suitable type of protection.

3 Learn the wearing method of PPE through video on screen show or as per instructors guide line.

4 Write the name of the PPE to the corresponding type of protective safety equipments in Table 1.

5 Get it checked by your instructor.

© NIMI NOT TO BE REPUBLISHED

Table 1

S. No.	Name of the PPE	Hazards	Type of protection
1	Helmet	Falling objects	Head Protection
2	Hand gloves	Electric shock	
3	Nose mask	Fumes/Dust particles	
4	Goggles	Flaying dust particles	
5	Ear plug	High noise level	
6	Leather aprons	Hot particles	

— — — — — —

TASK 2: **PPE Instruction and uses**

1 Some cleaning agents are toxic. Refer to the information about handling; use and storage of chemicals that may be hazardous, follow any recommendations made by the supplier before using it.

2 Do not use flammable cleaners or water on electrical equipment.

3 Make sure designated walkways are kept clear of any obstructions.

4 Always wear protective clothing and the appropriate safety equipment.

5 Make sure that you understand and observe all legislative and personal safety procedures when carry out the tasks. If you are unsure , on PPE uses ask your instructor to explain the procedure for PPE selection and wearing method.

6 Study the material safety data sheet while you use the materials for electric vehicle repair work.

— — — — — —

© NIMI
NOT TO BE REPUBLISHED

Practice on basic first aid to injured victim

Objectives: At the end of this exercise you shall be able to
- **prepare the victim to first aid**
- **practice Nelson's arm lift back pressure method**
- **use the schafer's method**
- **use the mouth to mouth method**
- **use the mouth to nose method**
- **cardiac arrest (CPR) cardio pulmanory method**
- **perform first aid for stopping the bleeding.**

Requirements

Tools/Instruments
- First aid kit - 1 No.
- First aid chart - 1 No.

Equipments/Machineries
- Structure - 1 No.
- Ambulance - 1 No.

Materials
- Cotton - as reqd.
- Tinger - as reqd.
- Bandage - as reqd.
- Bandage clip - as reqd.

PROCEDURE

Assumption - For easy manageability, Instructor may arrange the trainees in group and ask each group to perform one method of resuscitation.

© NIMI NOT TO BE REPUBLISHED

TASK 1: **Prepare the victim to first aid (Fig 1)**

1 Loosen the tight clothing which may interfere with the victim's breathing.

2 Remove any foreign materials or false teeth from his mouth and keep the victim's mouth open.

3 Bring the victim safely to the level ground, taking necessary safety measures. (Fig 1)

4 Start artificial respiration immediately without delay. Do not waste too much time in loosening the clothes or trying to open the tightly closed mouth.

5 Avoid violent operations to prevent injury to the internal parts of the victim.

6 Send the victim to a doctor immediately by ambulance.

Fig 1

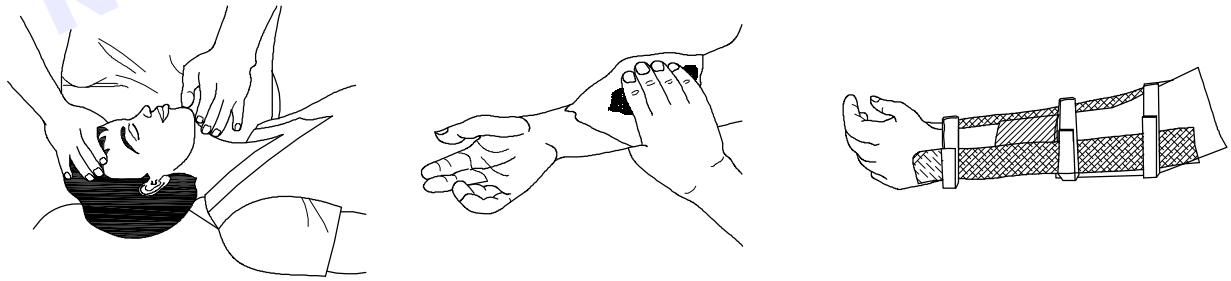

— — — — — —

TASK 2: **Resuscitate the victim by Nelson's arm - Lift back pressure method**

Nelson's arm - lift back pressure method must not be used in case there are injuries to the chest and belly.

1 Place the victim prone (that is face down) with his arms folded with the palms one over the other and the head resting on his cheek over the palms. Kneel on one or both knees near the victim's hand. Place your hands on the victim's back beyond the line of the armpits, with your fingers spread outwards and downwards, thumbs just touching each other as in (Fig 1).

Fig 1

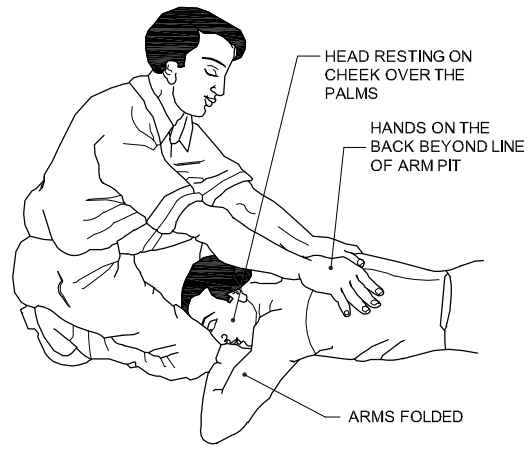

2 Gently rock forward keeping your arms straight until they are nearly vertical, and steadily pressing the victims back as shown in (Fig 2) to force the air out of the victim's lungs.

Fig 2

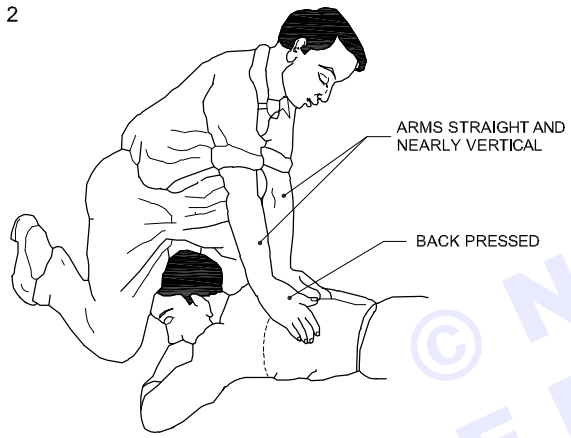

3 Synchronies the above movement of rocking backwards with your hands sliding downwards along the victim's arms, and grasp his upper arm just above the elbows as shown in (Fig 3). Continue to rock backwards.

4 As you rock back, gently raise and pull the victim's arms towards you as shown in (Fig 4) until you feel tension in his shoulders. To complete the cycle, lower the victim's arms and move your hands up to the initial position.

Fig 3

Fig 4

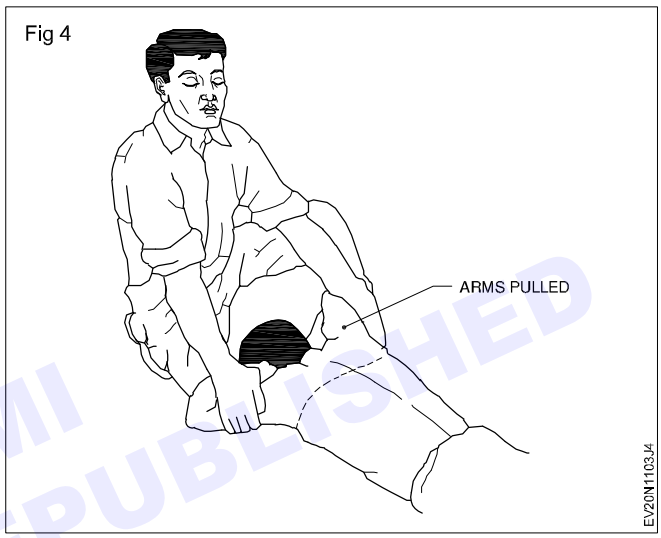

5 Continue artificial respiration till the victim begins to breathing naturally. Please note, in some cases, it may take hours.

6 When the victim revives, keep the victim warm with a blanket, wrapped up with hot water bottles or warm bricks; stimulate circulation by stroking the insides of the arms and legs towards the heart.

7 Keep him in the lying down position and do not let him exert himself.

Do not give him any stimulant until he is fully conscious.

© NIMI NOT TO BE REPUBLISHED

— — — — — —

TASK 3: **Resuscitate the victim by Schafer's method.**

Do not use this method in case of injuries to victim on the chest and belly

1 Lay the victim on his belly, one arm extended direct forward, the other arm bent at the elbow and with the face turned sideward and resting on the hand or forearm as shown in (Fig 1).

2 Kneel astride the victim, so that his thighs are between your knees and with your fingers and thumbs positioned as in (Fig 1).

3 With the arms held straight, swing forward slowly so that the weight of your body is gradually brought to bear upon the lower ribs of the victim to force the air out of the victim's lungs as shown in (Fig 2).

4 Now swing backward immediately removing all the pressure from the victim's body as shown in (Fig 3) thereby, allowing the lungs to fill with air.

5 After two seconds, swing forward again and repeat the cycle twelve to fifteen times a minute.

Fig 1

Fig 2

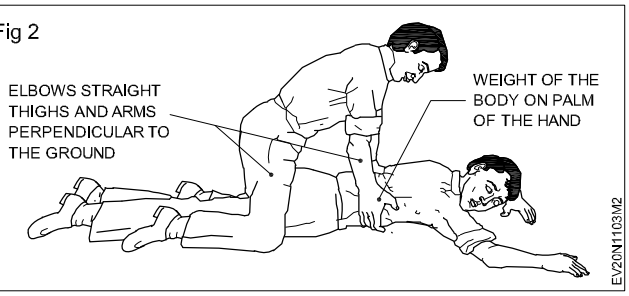

Fig 3

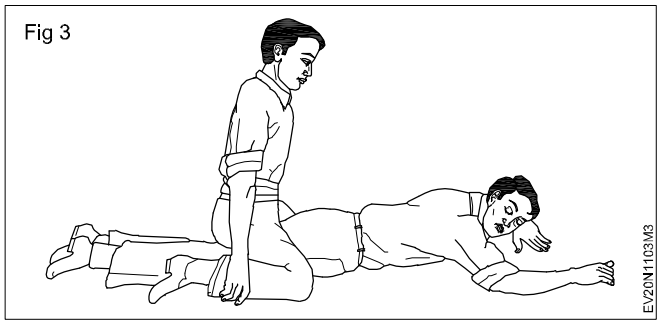

6 Continue artificial respiration till the victim begins to breathe naturally.

— — — — — —

TASK 4: **Resuscitate the victim by mouth-to-mouth method**

1 Lay the victim flat on his back and place a roll of clothing under his shoulders to ensure that his head is thrown well back (Fig 1).

Fig 1

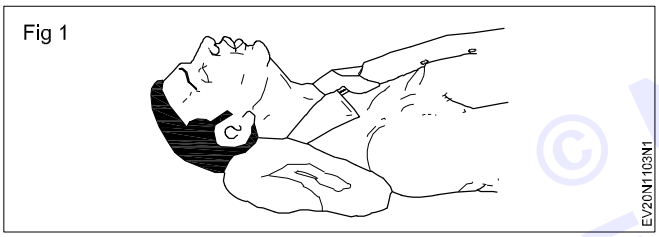

2 Tilt the victim's head back so that the chin points straight upward (Fig 2).

Fig 2

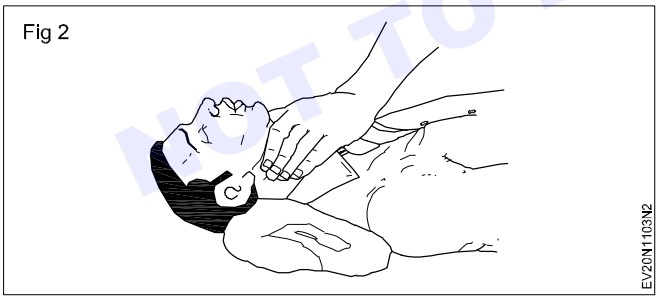

3 Grasp the victim's jaw as shown in (Fig 3), and raise it upward until the lower teeth are higher than the upper teeth; or place fingers on both sides of the jaw near the ear lobes and pull upward. Maintain the jaw position throughout the artificial respiration to prevent the tongue from blocking the air passage.

4 Take a deep breath and place your mouth over the victim's mouth as shown in (Fig 4) making airtight contact. Pinch the victim's nose shut with the thumb and forefinger. If you dislike direct contact, place a porous cloth between your mouth and the victim's. For an infant, place your mouth over his mouth and nose (Fig 4).

Fig 3

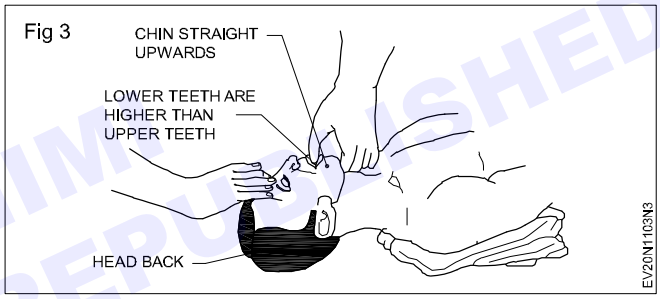

Fig 4

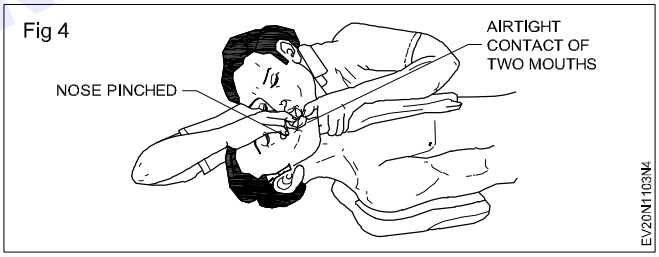

5 Blow into the victim's mouth (gently in the case of an infant) until his chest rises. Remove your mouth and release the hold on the nose, to let him exhale, turning your head to hear the rushing out of air. The first 8 to 10 breathings should be as rapid as the victim responds, thereafter the rate should be slowed to about 12 times a minute (20 times for an infant).

If air cannot be blown in, check the position of the victim's head and jaw and recheck the mouth for obstructions, then try again more forcefully. If the chest still does not rise, turn the victim's face down and strike his back sharply to dislodge obstructions.

Sometimes air enters the victim's stomach as evidenced by a swelling stomach. Expel the air by gently pressing the stomach during the exhalation period.

© NIMI NOT TO BE REPUBLISHED

Task 5 : **Resuscitate the victim by Mouth-to-Nose method**

Use this method when the victim's mouth will not open, or has a blockage you cannot clear.

1 Use the fingers of one hand to keep the victim's lips firmly shut, seal your lips around the victim's nostrils and breathe into him. Check to see if the victim's chest is rising and falling (Fig 1).

2 Repeat this exercise at the rate of 10 - 15 times per minute till the victim responds.

3 Continue this exercise till the arrival of the doctor.

Fig 1

EV20N1103X1

— — — — — —

Task 6 : **Resuscitate a victim who is under cardiac arrest (CPR) cardio pulmonary.**

In cases where the heart has stopped beating, you must act immediately.

1 Check quickly whether the victim is under cardiac arrest.

Cardiac arrest could be ascertained by the absence of the cardiac pulse in the neck (Fig 1) blue colour around lips and widely dilated pupil of the eyes.

Fig 1

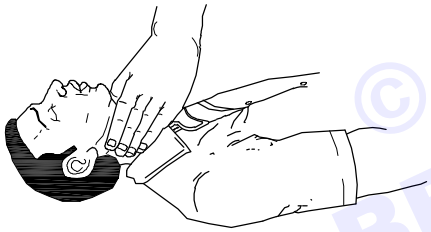

EV20N1103Y1

2 Lay the victim on his back on a firm surface.

3 Kneel alongside facing the chest and locate the lower part of the breastbone (Fig 2).

Fig 2

EV20N1103Y2

4 Place the palm of one hand on the centre of the lower part of the breastbone, keeping your fingers off the ribs. Cover the palm with your other hand and lock your fingers together as shown in (Fig 3).

5 Keeping your arms straight, press sharply down on the lower part of the breast bone; then release the pressure. (Fig 4)

Fig 3

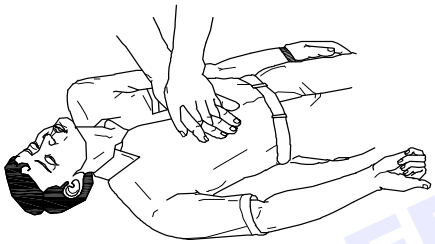

EV20N1103Y3

Fig 4

EV20N1103Y4

6 Repeat step 5, fifteen times at the rate of atleast once per second.

7 Check the cardiac pulse (Fig 5).

Fig 5

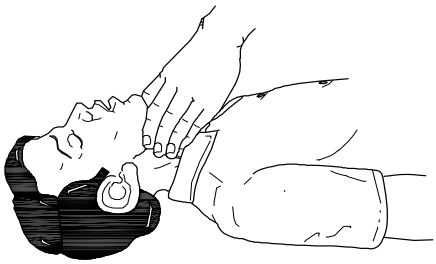

EV20N1103Y5

8 Move back to the victim's mouth to give two breaths (mouth-to-mouth resuscitation) (Fig 6).

9 Continue with another 15 compressions of the heart followed by a further two breaths of mouth-to-mouth resuscitation, and so on, check the pulse at frequent intervals.

© NIMI NOT TO BE REPUBLISHED

Fig 6

EV20N1103Y6

10 As soon as the heart beat returns, stop the compressions immediately but continue with mouth-to-much resuscitation until natural breathing is fully restored.

11 Place the victim in the recovery position as shown in (Fig 7). Keep him warm and get medical help quickly.

Fig 7

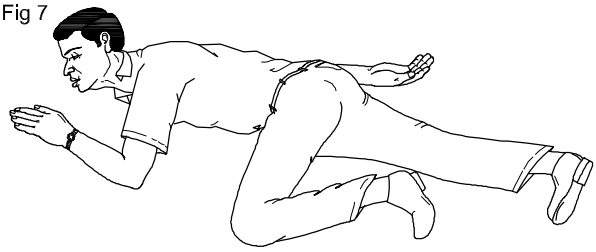

EV20N1103Y7

Other steps

1 Send ward for a doctor immediately.

2 Keep the victim warm with a blanket, wrapped up with hot water bottles or warm bricks; stimulate circulation by stroking the insides of the arms and legs towards the heart.

— — — — — —

Task 7 : **Treatment for bleeding victim**

1 Determine the location of the bleeding.

2 Elevate the injured area above the heart if possible.

3 Apply direct pressure to the bleeding area with sterile cloth.

4 Keep the pressure on for 5 seconds.

5 Check to see if the bleeding has stopped if not apply further pressure for 15 minutes.

6 Clean the wound.

7 Bandage the wound with pad of soft material (Fig 1).

8 Advice victim to take treatment from doctor.

Fig 1

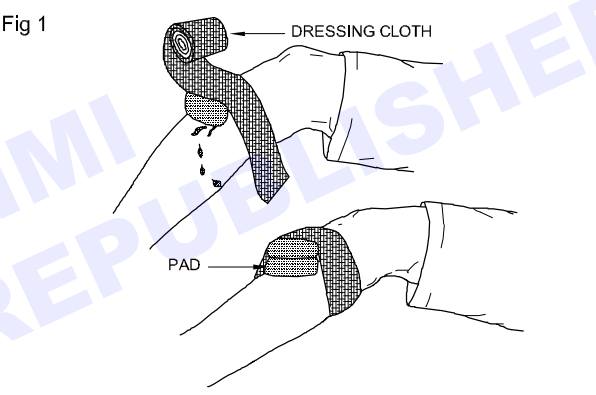

EV20N1103Z1

— — — — — —

© NIMI NOT TO BE REPUBLISHED

Practice on safe disposal of workshop waste materials

Objectives: At the end of this exercise you shall be able to
- **identify and segregate the waste material of electric vehicle repair shop**
- **store the waste materials in separate dust bins**
- **safe disposal of works shop waste materials.**

Requirements

Tools/Instruments

- Trainees tool kit manual - 1 No.
- Electric vehicle manual - 1 No.

Equipments/Machineries

- Electric vehicle - 1 No.
- Cotton waste dust bin - 1 No.
- Air compressor - 1 No.
- Cotton waste dust bin - 1 No.
- Rubber items waste bin - 1 No.
- Electric vehicle's waste dust bin parts - 1 No.

Materials

- Cotton waste - as reqd.
- Soap oil - as reqd.

PROCEDURE

TASK 1 **Disposal of waste materials from the workshop**

1 Collect all the waste materials in workshop.

2 Collect the chips by hand shovel with help of brush.

3 Clean the floor if oil any liquid is spill.

Do not handle the chip by bare hand there may different metal chips. So separate the chip according the metal.

4 Identify and segregate the different waste like cotton waste, metal chips, all chemical waste and electrical waste etc. (Fig 1) Separately and label them.

5 Segregate saleable, non saleable, organic and non organic materials also.

6 Store the each category similarly of metal chip in separate bins.

Each bin have respective lable.

7 Collect all the saleable materials metal and non- metal separately and keep it's respective bin.

8 Collect all the non - saleable materials like cotton waste, paper waste, wooden pieces etc and keep it's respective bin.

9 Check the non - saleable material work (organic) and send it for disposal by burning after getting approval.

10 Check the saleable material and segregate like Aluminium, Copper, Iron, Screws, Nuts and other items separately and send to stores for disposal by auction (or) as per recommended procedure with approval.

11 Record the segregated waste material and fill in the Table 1.

12 Arrange at least 3 trolleys with wheel for disposal and stick the table an each trolly as "Cotton Waste", "Metal chips" and "Others" (Fig 2).

13 Put cotton waste in cotton trolley and similarly put the metal chips waste and others in corresponding trolleys.

Fig 1

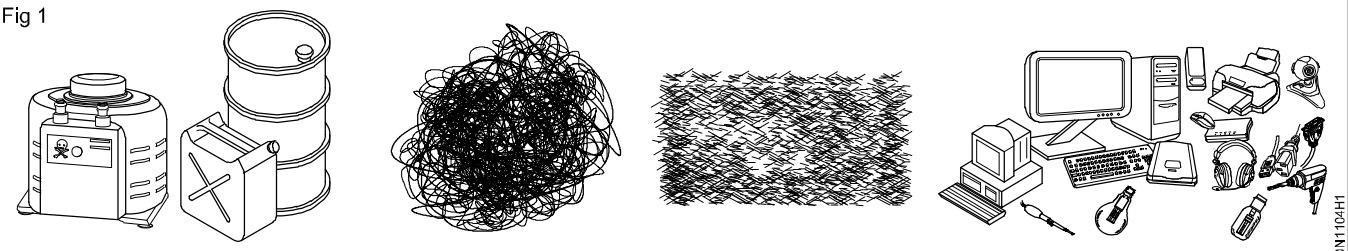

© NIMI NOT TO BE REPUBLISHED

Table 1

S.No	Name of the waste Materials	Quality	Saleable or non Saleable
1			
2			
3			
4			
5			
6			

Fig 2

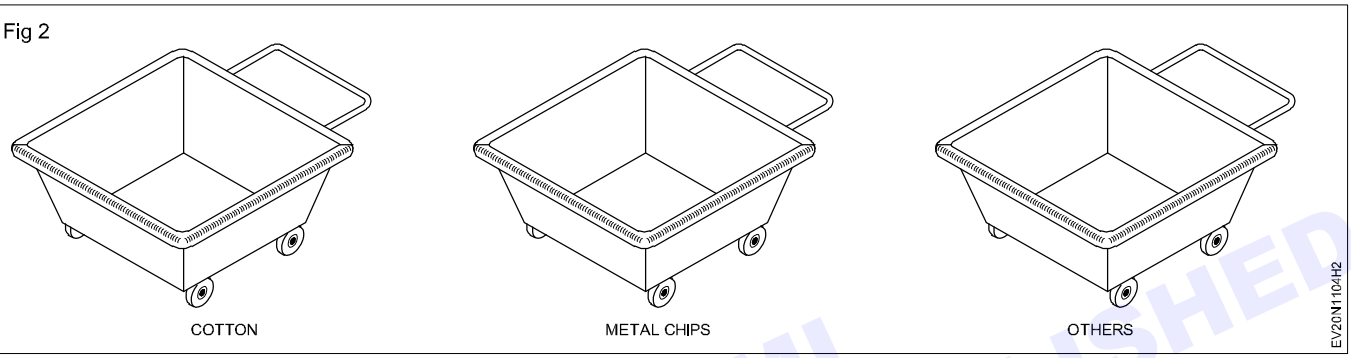

14 Keep another 4 bins or mark bins to collect saleable scrap non saleable scrap, organic waste and non-organic waste and label them. (Fig 3)

© NIMI NOT TO BE REPUBLISHED

Fig 3

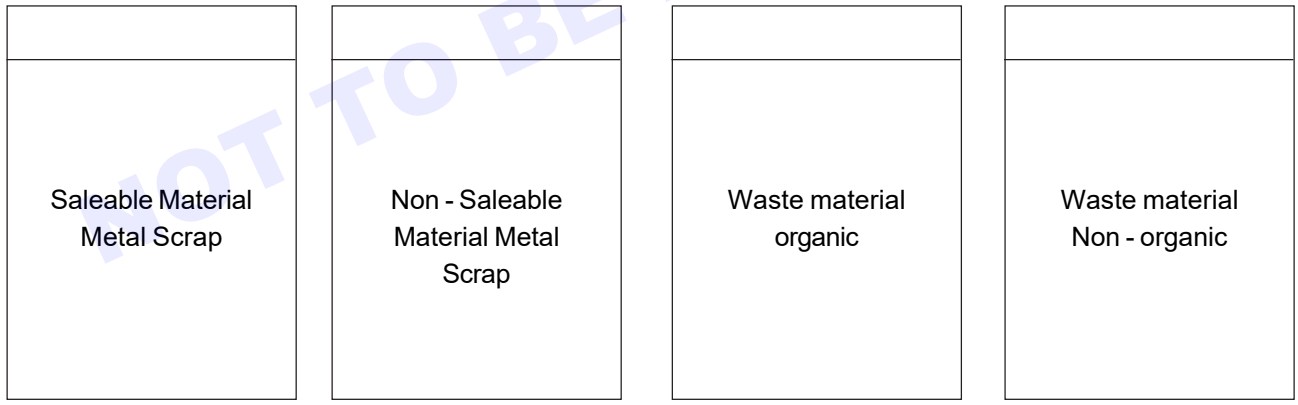

— — — — — —

Practice on identify the hazard and avoidance of hazard

Objectives: At the end of this exercise you shall be able to
- **identify the hazards in the shop floor**
- **identify the non hazards in the shop floor**
- **use the method of hazards avoid in shop floor.**

Requirements

Equipments/Machineries

- Fire fighting equipment - 1 No.
- Fire bucket sand - 2 No.
- Fire hook - 2 No.
- Water bucket - 2 No.

Materials

- Cotton waste - as reqd.
- Soap oil - as reqd.

PROCEDURE

TASK 1: **Identify the hazards in the Shop floor**

1 The trade trainer should be explain the type of hazards may be happen in shop floor.

2 Vehicle dust effect the human breathing and lung of the human body.

3 Vehicle dust particles deposit on finished parts.

4 Paint and oil items easily flammable due to mishandling of materials.

5 Oil and grease spillage may cause for slippage in the shop floor.

6 Write the name of hazard materials and their hazard effect in Table 1.

Table 1

S.No.	Hazard materials name	Type of hazard
1	Poor housekeeping area	
2	Nacked electrical wire	
3	Electrical short circuit	
4	Smoking near hazard materials	
5	Paint near smoking area	
6	Oil and paint spillage	

— — — — — —

TASK 2: **Identify the non-hazard materials**

1 Instructor should be show demo on sample non hazard materials used in shop floor.

2 Trainees identify the non-hazard materials in the shop floor.

3 Write the names of non-hazard materials and their effect in Table 2.

Table 2

S.No.	Non-hazard materials	Hazard effect
1		
2		
3		
4		

— — — — — —

TASK 3: **Avoiding method of hazards**

1 Follow the instruction of electric vehicle repair work in the shop floor.

2 Use PPE during electric vehicle and battery repair works.

3 Clean the shop floor and tool and equipment's before and after work.

4 Use the 5S methods in your shop floor.

5 Write the method of shop hazard avoidance in your log note book.

6 Note down the physical hazards can get electric vehicle dust in Table 3.

Table 3

S. No.	Physical Hazards	Cause for hazards
1	Eye irritation	Vehicle dust
2	Fore throat	Oilmist/Vehicle dust
3	Cough	
4	Runny nose	
5	Fatigue	

© NIMI NOT TO BE REPUBLISHED

Practice on identification of safety signs

Objectives: At the end of this exercise you shall be able to
- **identify the information sign**
- **identify the warning signs**
- **identify the cautionary signs.**

Requirements

Tools/Instruments
- Safety sign chart - 1 No.

Equipments/Machineries
- Safety sign audio and vedio

PROCEDURE

Identification of safety signs

Instructor should be provide various safety signs chart and explain their meaning. Ask the trainee to identify the sign and record in Table 1.

1 Identify the information warning and cautionary signs from the chart (Fig 1).

2 Record the name of the safety sign in Table 1.

3 Mention the warning information of the safety sign in Table 1.

4 Write the information of each sign in your log note book.

5 Get it checked by your instructor.

© NIMI NOT TO BE REPUBLISHED

Table 1

Fig. No.	Basic Categories/ Safety Sign	Warning information
1		
2		
3		
4		
5		
6		
7		
8		
9		
10		

Fig. No.	Basic Categories/ Safety Sign	Warning information
11		
12		
13		
14		
15		
16		
17		
18		
19		
20		

Fig 1

© NIMI NOT TO BE REPUBLISHED

— — — — — —

Practice on preventive measures for electrical accidents

Objectives: At the end of this exercise you shall be able to
- **identify the preventive measures for electrical accidents**
- **take steps in electrical accidents.**

Requirements

Tools/Instruments

- Trainee tool kit - 1 No.
- First aid kit - 1 No.

Equipments/Machineries

- Fire extinguisher - 1 No.
- Fire beater - 1 No.
- Structure - 1 No.

Materials

- Fire bucket - as reqd.
- Bandage - as reqd.
- Tinger - as reqd.
- Cotton - as reqd.
- Blanket - as reqd.

PROCEDURE

TASK 1: **Preventive measures of electrical accidents**

- Never touch any electrical devices with wet hands or while standing wet area.
- Wear rubber shoes in wet area.
- If you get a shock when touching a electrical parts turn off the power at the main panel.
- Immediately call an electrician and rectify the fault.
- Don't use frayed or broken cords or broken plugs with missing prong.
- Don't overload sockets and use power board with a safety switch and only use one for wall outlet.
- When un-plug pull by the plug but not the cord.
- Don't use the broken wires.
- Test the switches safety before use it.
- Don't touch a downed power line or climb utility pole.
- Switch off and unplug electrical vehicle connections before you clean it or make adjustment.

— — — — — —

TASK 2: **Steps to be taken incase of electrical accidents**

- In-case of a person with electrical shock/injury don't delay act fast and switch off the main power supply.
- If the casualty is still in contact with supply, stand on insulating material such as wood, rubber or plastic.
- By using hand to insulate yourself and break the contact by pushing or pulling the person free as shown figure (Fig 1 & 2).

Fig 1

EV20N1107H1

Fig 2

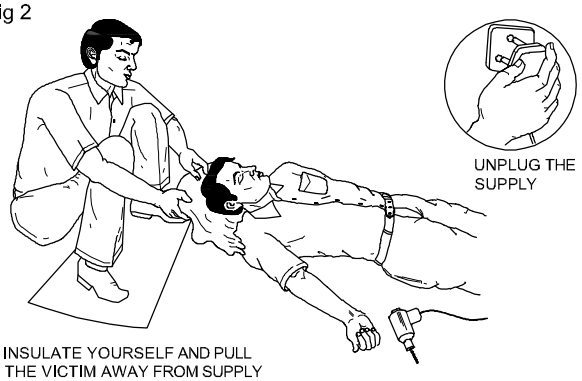

EV20N1107H2

- Don't touch the victim with bare hands until the electric circuit is made dead.
- If the victim is aloft, prevent him from falling.
- If the electric burns on his body may not cover a big area.

© NIMI NOT TO BE REPUBLISHED

- Cover the electric burn area with a clean, sterile dressing and treat for electric shock.
- If the victim is unconscious but he is breathing loosen the clothing and place the casualty in the recovering position as shown in Fig 3.

Fig 3

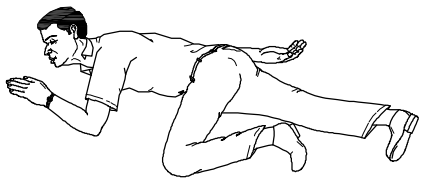

KEEP THE VICTIM AT EASE

EV20N1107H3

- Keep the casualty warm and comfortable is shown in Fig 4.

Fig 4

EV20N1107H4

Do not give an unconscious person anything by mouth.

Do not leave an unconscious person unattended

If casualty is not breathing. Act at once-don't waste time!

Note: The severity of an electrical shock will depend on the level of the current passes through the human body and the length of time current contact with body

— — — — — —

TASK 3: **Treatment for electric shock**

- Give first aid treatment to the injured victim as soon as possible (Fig 1 & 2).

Fig 1

EV20N1107J1

Fig 2

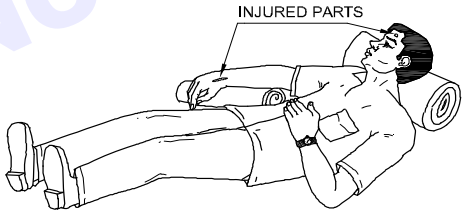

EV20N1107J2

- Then send him for emergency treatment if seriously injured.
- Don't waste time by applying first aid to the burn until breathing has been restored and the patient can breath normally.
- Clean the burnt area by clean cloth, water, paper.
- If found bleeding considered serious and must receive professional attention.
- If severe bleeding, make the patient lie down on mat. (Fig 2)
- Raise the injured part above the level of the bed.
- Apply pressure on the wound area(Fig 3).

Fig 3

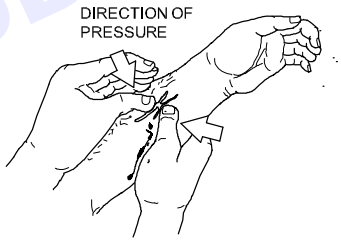

EV20N1107J3

- Apply pressure as long as until blood stop the bleeding.
- If the large wound apply clean pad and bandage firmly in place, if bleeding is very serious apply more than on dressing (Fig 4).

Fig 4

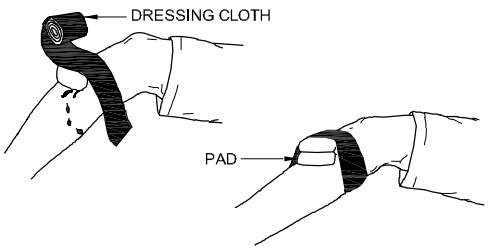

EV20N1107J4

- If need call ambulance send the injured victim to the hospital.

— — — — — —

© NIMI NOT TO BE REPUBLISHED

Practice on use of fire fighting equipments and fire extinguishers

Objectives: At the end of this exercise you shall be able to
- **practice on operation of the extinguisher**
- **practice on use of fire fighting equipments.**

Requirements

Tools/Instruments

- Trainees tool kit - 1 No.
- Seal cutter - 1 No.

Equipments/Machineries

- Fire extinguisher - as required.
- Fire bucket sand - as required.
- Fire water bucket - as required.
- Fire beater - as reqd.
- Fire hook - as reqd.

Materials

- Water - as reqd.
- Sand - as reqd.
- Blanket - as reqd.
- First aid kit - as reqd.

PROCEDURE

TASK 1: **Practice on operation of fire extinguisher**

General procedure to be adopted in the event of fire.

1 Raise an alarm. Follow the method written below for giving alarm signals when fire breaks out.
- Inform to fire service station and then raising a voice and shouting fire fire to make the attention of others.
- Run towards fire alarm/bell to actuate it to attract the attention of co-workers and public.
- Other means.

2 On receipt of the alarm signal.
- Stop working and put "OFF" electrical power supply.
- Open emergency exit and ask them to go away.

3 If you are not involved it fighting the fire.
- Leave calmly using the emergency exit (Fig 1).
- Evacuate the premises.
- Assemble at a safe place along with the others.
- Check if anyone has gone to inform about the fire break to the concerned authority.
- Close the doors and windows, but do not lock or bolt.

4 If you are involved in fire fighting.
- Take instructions/give instruction for an organized way of fire fighting.
- Follow the instructions, and obey, the safety rules.
- Assess the class of fire.
- Send the people for sufficient assistance and inform to the fire brigade.
- Locate locally available suitable materials to put out the fire.
- Judge the magnitude of the fire, ensure emergency exit path are clear of obstructions and then attempt to evacuate (Remove explosive materials, substances that can serve as a ready fuel for fire within the vicinity of the fire break).
- Fight out the fire with assistance to pull it out by naming the person responsible for each activity.

5 Report the fire accident and the measures taken to put out the fire to the authorities concerned and then analyze and identify the type of the fire as per Table 1.

Reporting all fires however small helps in the investigation of the causes of the fire. It helps to prevent the same kind of accident occurring again.

Note: Perform this exercise with the support of the service station.

Assume the fire is 'B' type (flammable liquefiable solids).

6 Select CO2 (Carbon dioxide) fire extinguisher.

7 Locate and pick up CO2 fire extinguisher. Check for its expiry date.

8 Break the seal (Fig 2).

9 Pull the safety pin from the handle (pin located at the top of the fire extinguisher) (Fig 3).

© NIMI NOT TO BE REPUBLISHED

Fig 1

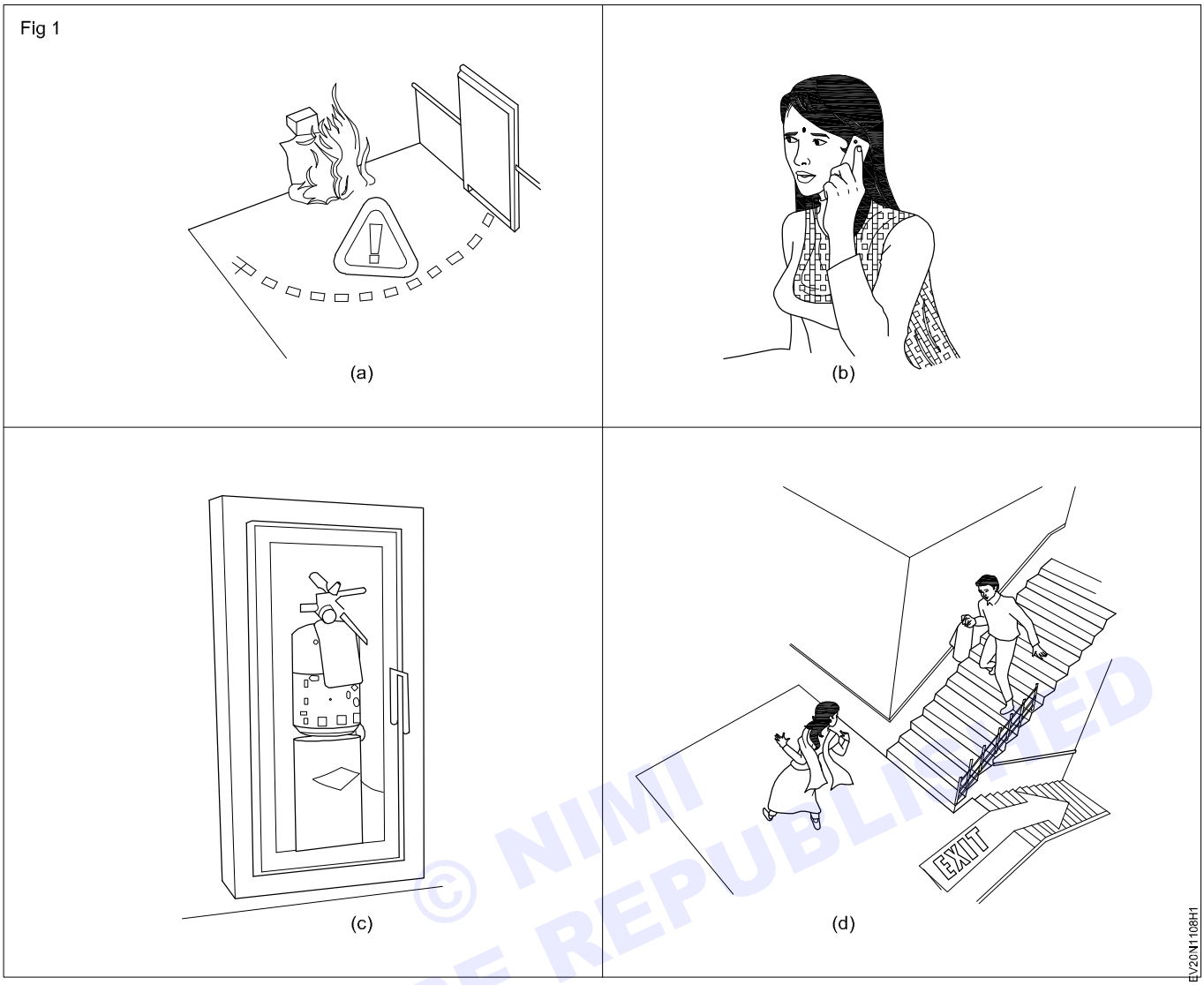

Fig 2

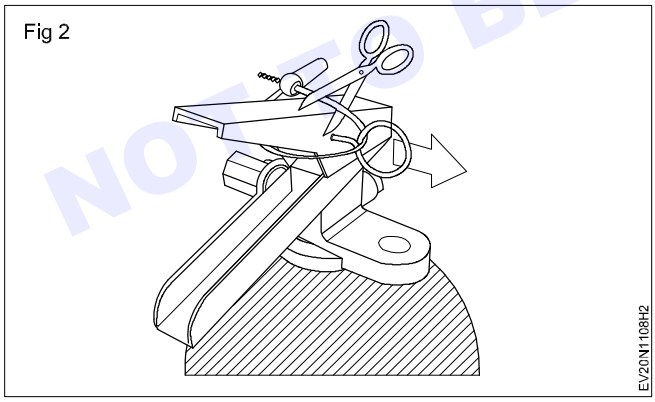

Fig 3

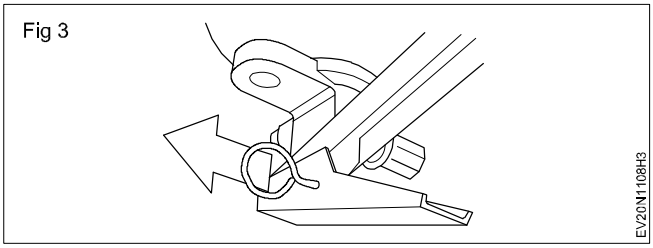

Table 1

Type of fire	Materials/Items associated with	Figure
Class 'A'	Wood, paper, cloth, solid material	
Class 'B'	Oil based fire (grease, gasoline, oil)& liquefiable solids	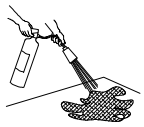
Class 'C'	Gas and liquefied gases	
Class 'D'	Metals and electrical equipment	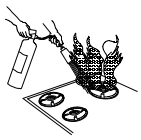

© NIMI NOT TO BE REPUBLISHED

10 Aim the extinguisher nozzle or hose at the base of the fire (this will remove the source of fuel fire) (Fig 4).

Fig 4

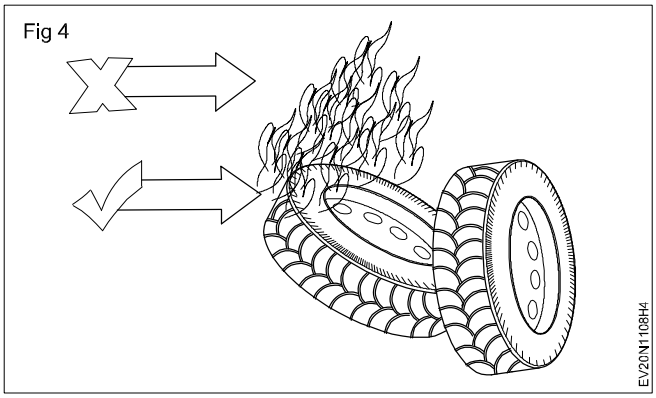

11 Squeeze the handle lever slowly to discharge the agent (Fig 5).

Fig 5

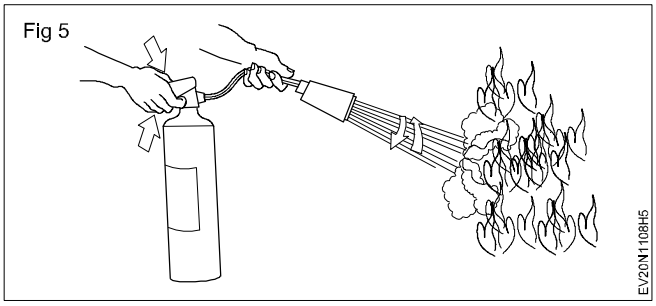

12 Sweep side to side approximately 15 cm over the fuel fire until the fire is put off.

Fire extinguishers are manufactured for use from the distance.

Caution

1 While putting off fire, the fire may flare up.

2 Do not be panic so long as it put off promptly.

3 If the fire doesn't respond well after you have used up the fire extinguisher move away your self away from the fire point.

4 Do not attempt to put out a fire where it is emitting toxic smoke, leave it to the professionals.

5 Remember that your life is more important than properly. So don't place yourself or others at risk.

In order to remember the simple operation of fire extinguisher.

Remember.

P.A.S.S. This will help to use fire extinguisher.

P for pull.

A for aim.

S for squeeze

S for sweep.

© NIMI NOT TO BE REPUBLISHED

— — — — — —

TASK 2: **List out the fire service station equipment and practice to use the equipment**

- **Write dowm the fire stattion fire lightening equipments and its uses**

S.No	Equipment Name	Purpose	Remarks
1	Fire Extinguisher	Put off fire	
2	Fire Hook		
3	Fire Bucket		
4	Sand		
5	Fire Service vehicle		
6			
7			
8			
9			
10			

Practice on precautionary method of working in fitting jobs

Objectives: At the end of this exercise you shall be able to
- **understand the precaution to be followed while working in fitting job.**

Requirements

Tools/Instruments

- Trainee tool kit - 1 No.
- Cutting tools - 1 No.

Equipments/Machineries

- Work bench - 1 No.

Materials

- Cotton waste - as reqd.
- Soap oil - as reqd.

PROCEDURE

Precautionary method of working in fitting jobs

- Use proper dress for the occasion.
- Don't wear baggy, loose dress wear.
- Don't wear loose hanging items.
- Long sleeves should be rolled up.
- Wear gloves whenever work with hot articles.
- Don't use gloves while operating machines.
- Wear safety glasses while you are work with welding or grinding job or work with chemical, sanding, cutting etc.
- Keep you workshop neat and clean.
- Use vacuum cleaner to clean micro dust in the workshop.
- Don't use drugs, alcohol or other impairments while you are work with fitting jobs in your work shop.
- Read the machine manual before operating the machine to prevent injury.
- Keep tools and equipments sharp.
- Before start the fitting job ensure the following tools are in working condition.
  1. Marking and measuring tools.
  2. Holding device.
  3. Striking tools.
  4. Cutting/chipping tools.
  5. Finishing tools.
- If found any defects in machine or tools immediately rectify the defects.
- Avoid unnecessary distraction.
- Use safety tools and PPE.
- Check the finished job for any imperfections.
- Use the electrical extension cords, where power point is not available in the shop floor.
- Keep the safe work shop environment and peace of mind while you are working with fitting jobs.
- Follow the workshop standing order polices (SOP).
- Be insure the following before start.
- Don't use file without handle.
- Don't use punches and hammer with mushroom head.
- Don't use hammer with loose head.
- Keep your hands away from moving parts.
- Ensure that the work piece is clamped in the vice firmly and securely.
- Keep the hand tools and vice clean.
- Always use a brush to remove any metal chips.
- Always wear safety shoes.
- Remove wrist watches, rings, bracelets, bangles, since they can lead to injuries while you are working with fitting job.

© NIMI NOT TO BE REPUBLISHED

— — — — — —

Practice on safe use of tools and equipment used in the trade

Objectives: At the end of this exercise you shall be able to
- **safe use of tools and equipments in electric vehicle repair shop floor.**

Requirements

Tools/Instruments

- Trainee tool kit - 1 No.

Equipments/Machineries

- Air compressor - 1 No.
- Electric vehicle - 1 No.
- Vacuum cleaner - 1 No.
- Grease gun - 1 No.

Materials

- Cotton waste - as reqd.
- Soap oil - as reqd.
- Grease - as reqd.

PROCEDURE

Safe use of tools and equipments of the shop floor

- Clean the tools and equipments of the shop floor (before and after use).
- Clean the floor jacks, rectify the faults of jacks if found any fault.
- Keep the power tools clean by brushing off any dust and wiping off excess oil or grease with clean cloth.
- Clean the power tools and apply a few drops of oil into the inlet of power tools every day before use.
- Clean the electric vehicle shop floor with recommended cleaning solvent and make it dust free repair shop.
- Storing out the materials and tools in proper place.
- Systematically arrange the materials and tools before start vehicle maintenance work.
- Always maintain the self-discipline in every step of working with tools and equipments in your shop floor.
- Read the equipment manual for make a base performance and avoid injury.
- Don't use the damaged tools.
- Always select the correct tools and equipments for your suitable job.
- Maintain self discipline while you are working with tools and equipment in the shop floor.
- Take precautions while working with electric vehicle electrical parts.
- Use the recommended instruments to diagnose the vehicle faults.
- Be aware of your surroundings in your work place.
- Take break regularly.
- Use tools and equipments properly.
- Reduce workplace stress.

— — — — — —

© NIMI NOT TO BE REPUBLISHED

Practice on Comparison of Commercial and Passenger Vehicle

Objectives: At the end of this exercise you shall be able to
- **compare the commercial and passenger vehicle.**

Requirements

Tools/Instruments
- Trainee tool kit - 1 No.
- Vehicle manual - 1 No.

Equipments/Machineries
- Commercial vehicle - 1 No.
- Passenger vehicle - 1 No.

Materials
- Cotton waste - as reqd.
- Soap oil - as reqd.

PROCEDURE

Comparison of commercial and passenger vehicle

- Park the commercial and passenger vehicle on the shop floor.
- Study the both vehicle manual.
- Study and inspect the vehicle construction methods.
- Study the both vehicles technical specification.
- Study the both vehicles capacity, weight, height, length, fuel number of axile, number of wheels, steering type, fabrication material & type, vehicle color, vehicle ground clearance etc.

Note: Instructor should be given detailed explanation on both type of vehicle's function to the trainer's.

- Write the comparison of commercial and passenger vehicle in Table 1.

© NIMI NOT TO BE REPUBLISHED

Comparison of commercial and passenger vehicle (Fig 1)

Table 1

S.No	Vehicle Parts	Commercial Vehicles	Passenger Vehicles	Remarks
1	Engine type	Diesel, C 1 engine	LPG S1 Engine	
2	Engine capacity	35 CC	218 CC	
3	Vehicle type	Lorry	Bus	
4	Steering system	Power steering	Manual steering	
5	Brake system			
6	Fuel injection system			
7	Intake air system			
8	Exhaust system			
9	Brake system			

10	Suspension system			
11	Power flow system			
12	Starting system			
13	Charging system			
14	Number of cylinders			
15	Engine weight			
16	Cooling system			
17	Kilo weight			
18	GVW			
19	Fuel capacity			
20	Clutch type			
21	Max gross power			
22	Max grass torque			

Fig 1

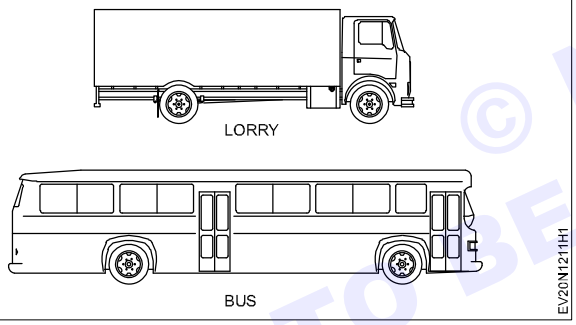

© NIMI NOT TO BE REPUBLISHED

— — — — — —

Practice on Classification of vehicle based on various categories

Objectives: At the end of this exercise you shall be able to
- **demonstrate and classify the vehicles.**

Requirements

Tools/Instruments
- Trainee tool kit - 1 No.
- Vehicle manual - 1 No.

Equipments/Machineries
- Car - 1 No.
- Bus - 1 No.
- Lorry - 1 No.

Materials
- Cotton waste - as reqd.
- Soap oil - as reqd.

PROCEDURE

Classification of vehicles based on different categories.
- Park the different type of vehicle on shop floor.
- Apply parking brake.
- Apply wheel blocks in front and back side of the wheel.
- Study the vehicle manual for technical specifications.
- Note down the various categories of each vehicle parts in Table 1.

Note: Instructor has to be given demo and explain about various vehicle's working systems and their classification as per vehicle manual.

© NIMI NOT TO BE REPUBLISHED

Table 1

S.No	Vehicle system	Lorry	Bus	Car	Electric car
1	Vehicle body				
2	Vehicle load				
3	Fuel used				
4	Power source used				
5	No of wheels				
6	No of axle				
7	Transmission type				
8	Steering type				
9	Brake systems				
10	Position of engine				
11	No of cylinders				
12	Differential				

— — — — — —

13	Find reduction				
14	Gear box type				
15	Compression ratio				
16	No of vehicle doors				
17	Drive system				
18	Steering system				
19	Source of power				
20	Engine type				
21	Door operating system				
22	Center lock system				
23	Battery charging system				
24	Starting system				

— — — — — —

© NIMI
NOT TO BE REPUBLISHED

Practice on Identifying the car body styles and the reason behind

Objectives: At the end of this exercise you shall be able to
- **identify the car body styles**
- **identify the reason behind the car body styles.**

Requirements

Tools/Instruments
- Trainee tool kit - 1 No.
- Car manual - 1 No.

Equipments/Machineries
- Different types of Car - 1 No each.

Materials
- Cotton waste - as required.
- Soap oil - as required.

PROCEDURE

Identify the car body styles and reason behind the body style

- Select the different type of cars.
- Park the selected cars on the shop floor.
- Identify the each cars body type.
- Study the car body styles of each car.
- Compare the car body styles.
- Study the reason behind the each car body style.

Note: Instructor should be explain about the style of each car body and advantage and disadvantage of car body style.

- Ask the trainee's to write down the car body style type, advantage disadvantage in Table 1.

© NIMI NOT TO BE REPUBLISHED

Table 1

S. No	Car type	Manufacturer	Car body type	Reason behind body style	Advantage	Disadvantage	Remarks
1							
2							
3							
4							
5							
6							

— — — — — —

Practice on Identification of vehicle information number and vehicle specification

Objectives: At the end of this exercise you shall be able to
- **identify the car body styles**
- **identify the reason behind the car body styles.**

Requirements

Tools/Instruments

- Trainee tool kit - 1 No.
- Vehicle manual - 1 No.
- Measuring tape - 1 No.

Equipments/Machineries

- Electric vehicle - 1 No.

Materials

- Cotton waste - as required.
- Soap oil - as required.
- Paper - as required.
- Pencil - as required.
- Eraser - as required.

PROCEDURE

TASK 1: **Verifying the vehicle specification data.**

- Select the electric vehicle to check the vehicle specification.
- Park the vehicle on the shop floor.
- Study the vehicle manual for vehicle specification information.

Note: Instructor should be demonstrate the vehicle specification as per vehicle manual and indicate vehicle parts and their specification to the trainee's.

Ask the trainee's to identify the parts and note the specification as given below.

© NIMI NOT TO BE REPUBLISHED

S.No.	Vehicle parts	Vehicle specification	Remarks
1	Vehicle brand		
2	Vehicle model year		
3	Trim		
4	Vehicle body style		
5	Vehicle body material		
6	Vehicle exterior colors		
7	Vehicle interior colors		
8	Number of doors		
9	Number of seats		
10	Vehicle length		
11	Vehicle width		
12	Vehicle height		
13	Wheel base		

S.No.	Vehicle parts	Vehicle specification	Remarks
14	Rear track		
15	Ground clearance		
16	Passenger volume		
17	Maximum trunk volume		
18	Crub weight		
19	Pay load		
20	GVWR		
21	Drag co efficient		
22	Electric motor		
23	Electric motor manufacturer		
24	Electric motor type		
25	Power		
26	Maximum power RPM		
27	Torque		
28	Regenerative braking		
29	Top speed		
30	Driving range		
31	Energy efficiency		
32	Energy class		
33	Type of steering mechanism		
34	Type of transmission		
35	Drive train		
36	Axle ratio		
37	Front system on type		
38	Rear suspension type		
39	Front brake type		
40	Rear brake type		
41	Rim size		
42	Tyre size		
43	Battery manufacturer		

© NIMI NOT TO BE REPUBLISHED

S.No.	Vehicle parts	Vehicle specification	Remarks
44	Battery capacity		
45	Number of modules		
46	Battery location		
47	Battery cooling type		
48	Battery charging port		
49	Onboard charger/charging port		
50	Battery charging time		
51	Battery invertor type		

— — — — — —

TASK 2: **Identifying the vehicle information number (VIN)**

Vehicle Identification Number (VIN) is composed of 17 digits and classified into three large groups such as WMI, VDS and VIS, Example - MALBB5 IBC AMI 73752.

	Digit	Passenger Car/MPV/BUS
WMI	1	Geographic Zone
	2	Manufacturer
VDS	3	Vehicle type
	4	Series
	5	Body style and version
	6	Body type
	7	Restraint system/GVWR/ Brake system
	8	Engine type
	9	Check digit/Drive side
VIS	10	Model year
	11	Plant of product
	12-17	Serial number

- WMI: World Manufacturer Identifier
- VDS: Vehicle Descriptor Section
- VIS: Vehicle Indicator Section
- MPV: Multipurpose Passenger Vehicle (Ex: MPV:SUV, RV)
- GVWR: Gross Vehicle Weight Rating

Note: Vehicle code may be vary depend upon manufacturer

Check the VIN number in your institute vehicle under guide line of instructor.

- Place a car in plain ground
- Apply hand brake and chock the wheels
- Identify the location of VIN number in your vehicle
- Note the VIN number of your vehicle on plain paper
- Decode the VIN number details as per the manufactures general information.

© NIMI NOT TO BE REPUBLISHED

— — — — — —

Practice on prepare a report to show differences between two vehicles

Objectives: At the end of this exercise you shall be able to
- **prepare a report of differences between two vehicles.**

Requirements

Tools/Instruments
- Trainee tool kit - 1 No.
- Vehicle manual - 1 No.

Equipments/Machineries
- Electric vehicle - 1 No.
- I.C. Engine vehicle - 1 No.

Materials
- Cotton waste - as required.
- Soap oil - as required.

PROCEDURE

TASK 1: **Comparison between internal combustion engine vehicle and Electric Vehicle.**

- Select the two type of vehicles for prepare the report difference between two vehicles.
- Park the I.C Engine vehicle and electric vehicle on the shop floor.
- Apply hand brake and chock the wheels.
- Study the both vehicles manual for specification information.

Note: Instructor should be explain the difference between parked vehicles by physical examples.

Ask the trainee's to write the difference between I.C Engine vehicle and Electric Car.

© NIMI NOT TO BE REPUBLISHED

S.No.	Point of Comparison	I.C. Engine Vehicles	Electric vehicle	Remarks
1	Source of power	I.C. Engine power	Battery power	
2	Prime mover	I.C. Engine is the prime mover	Electric motor is the prime mover	
3	Specific Energy energy of fuel	High specific energy of fuel	Low specific energy of battery	
4	Power density	High	Low	
5	Impact on environment	ICEV emits green house gases	EV does not emit green house gases	
6	Travelling distance tank fuel available	Depend on fuel tank fuel is available	Depends on battery charge capacity	
7	Refilling time			
8	Space & weight of fuel tank			

S.No.	Point of Comparison	I.C. Engine Vehicles	Electric vehicle	Remarks
9	Maintenance & running costs			
10	Efficiency			
11	Noise production			
12	Recovery of braking energy			
13	Time required for maximum torque			
14	Capital cost			
15	Power transmission			
16	Brake type			
17	Steering type			
18	Suspension type			
19	Battery charging system			

- After write the difference between two vehicle, check it with your instructor whether is it right or wrong.

— — — — — —

© NIMI NOT TO BE REPUBLISHED

Practice on crimping and joining wires

Objectives: At the end of this exercise you shall be able to
- **prepare the crimping joints with connector**
- **solder the cables by using blow lamp**
- **solder the wires by using electric soldering iron.**

Requirements

Tools / Instruments

- Trainee's tool kit - 1 No.
- Crimping plier - 1 No.
- Blow lamp - 1 No.
- Tong - 1 No.
- Combination plier - 1 No.

Materials

- Cotton waste - as reqd.
- Wooden plank - as reqd.
- Solder - as reqd.
- Brick - as reqd.
- Insulating sleeve - as reqd.
- Flux - as reqd.
- Lug socket - as reqd.
- Cloth/Cotton tape - as reqd.
- Grade sandpaper - as reqd.
- Copper and aluminium conductors - as reqd.
- Grade sandpaper - as reqd.
- Copper and Aluminium conductors - as reqd.

PROCEDURE

TASK 1: **Prepare the crimping joints with connector**

1 Strip off the required length of insulation from the cable that suits the terminal size. (Fig 1)

Fig 1

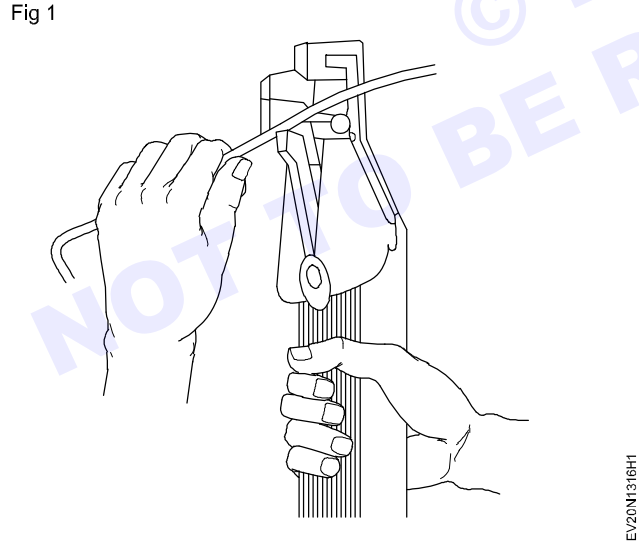

Be sure not to cut or damage the wire core, and use correct size wire stripper blade. (Fig 2)

2 Twist the strands of the wire slightly clockwise. (Fig 3)

3 Clamp the spade connector with the crimping pliers in the matching position of the jaws. (Use a suitable spade connector and crimping plier). (Fig 4)

4 Insert the wire far enough in the connector.

Fig 2

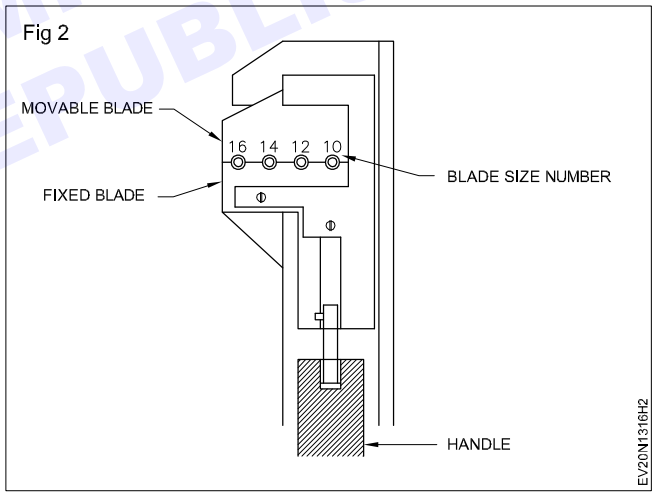

Fig 3

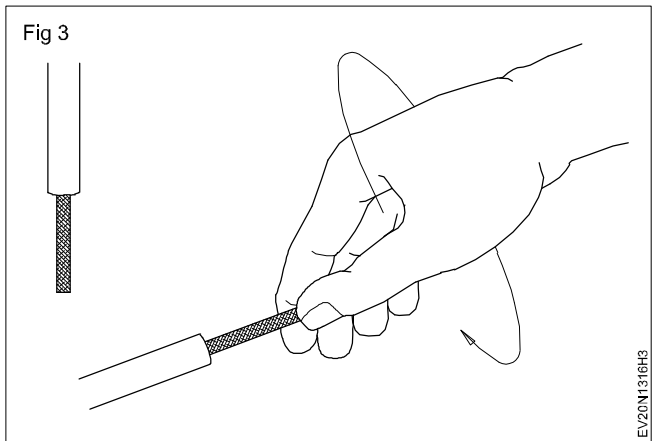

© NIMI NOT TO BE REPUBLISHED

Fig 4

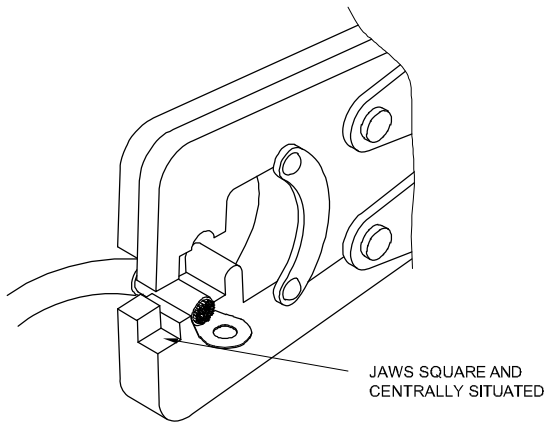

5 Apply slight pressure to create a light impression on the connector.

6 Check whether the connector is located in the middle of the band of the connector, and, if necessary, make final adjustments.

Fig 5

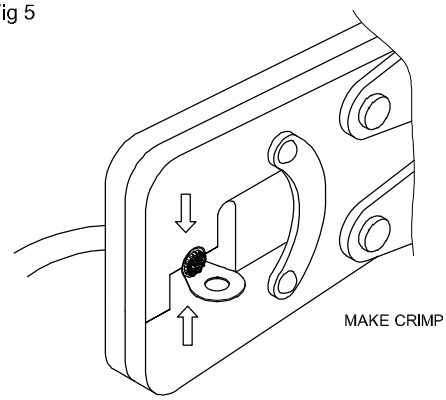

7 Apply sufficient pressure in the handle to press the connector fully. (Fig 5)

8 Check whether the prepared crimping joint is firm by pulling the cable and connector.

9 Repeat the crimping of connectors for various sizes of copper and aluminum conductors of different lengths.

— — — — — —

TASK 2: **Solder the cable lugs by using blow lamp**

1 Solder a lug to a copper conductor. (Fig 1)

Fig 1

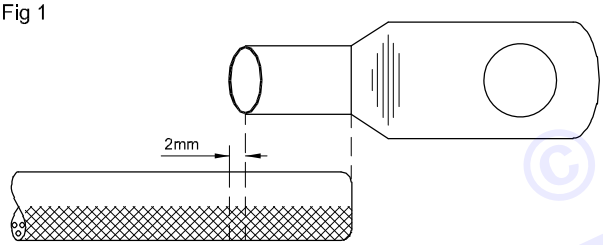

2 Clean the inner surface of the cable lug using 00 grade sandpaper.

3 Put the cable lug to one end of the cable and mark the cable according to the depth of the cable lug. Add about 2 mm to the marking.

4 Remove the insulation from the cable and clean the strands. (Avoid damage to the strands of the cable while skinning). (Fig 2)

Fig 2

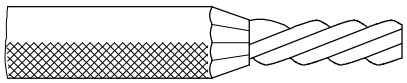

5 Wrap a cloth/cotton tape on the insulation of the cable to a length of 30 mm and wet it with water. (Use minimum water to wet the cloth/tape. Do not allow water to drip). (Fig 3)

6 Light the blowlamp and let it emit a blue flame. (Fig 4)

7 Apply a thin coat of flux to the cable end.

Fig 3

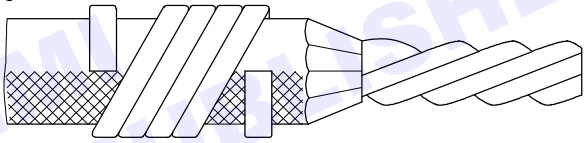

Fig 4

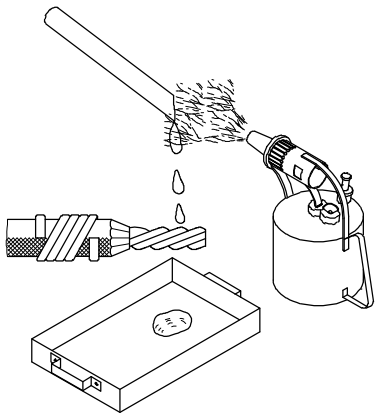

8 Tin the cable end by monitoring the blowlamp on the solder stick and by allowing the molten solder to fall on the bar stranded cable end. Place a clean tray below the cable end to collect the excess solder.

9 Apply a small quantity of flux inside the lug socket. Tin the lug by melting the solder stick to fill the socket and collect the excess molten solder in the tray. (Fig 5)

10 Apply some flux to the cable end and socket interior. (Fig 6)

11 Fill up the socket of the lug with the molten solder.

© NIMI NOT TO BE REPUBLISHED

Fig 5

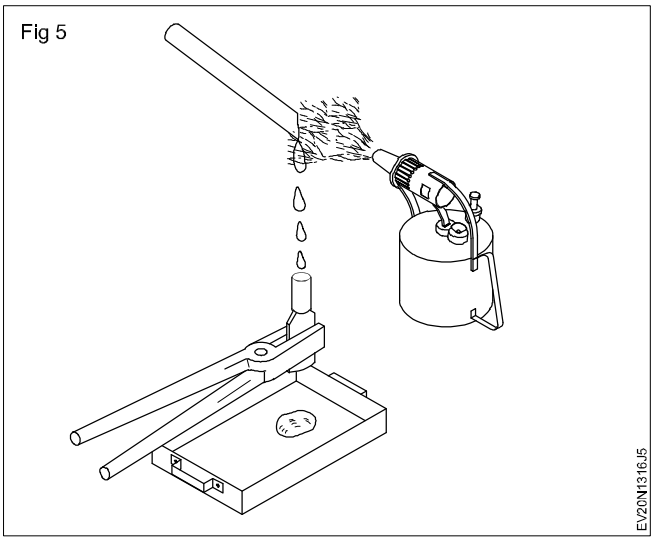

Fig 6

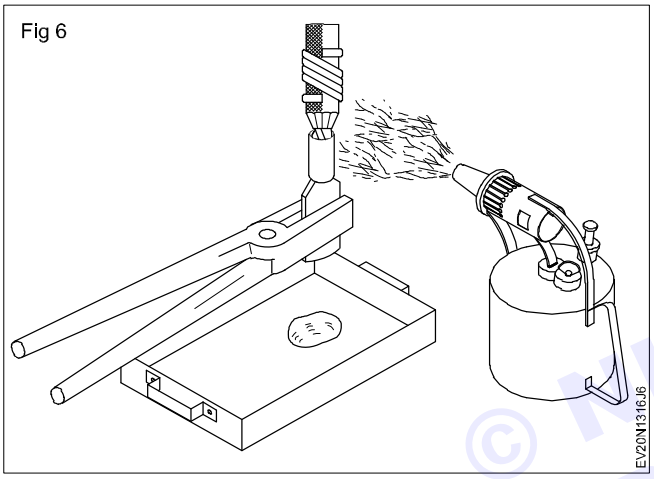

12 Monitor the blowlamp flame on the socket; insert the cable in the socket and hold the cable vertically.

13 Remove the blowlamp and hold the cable and socket without shaking. (Fig 7)

Fig 7

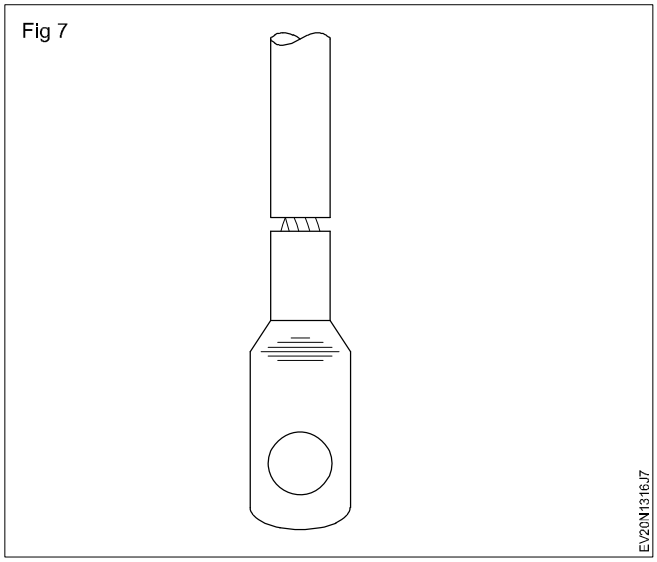

14 Remove the extra solder from the lug and the cable by wiping with a piece of cotton cloth while the solder is still hot.

15 Keep holding the cable and lug until the solder solidifies.

Do not use water to cool the lug.

© NIMI NOT TO BE REPUBLISHED

— — — — — — —

TASK 3: **Solder the cable using soldering iron**

1 Clean the strands and get a copper face free from sulphate.

2 Insert the wire end as shown in the Fig 1.

Fig 1

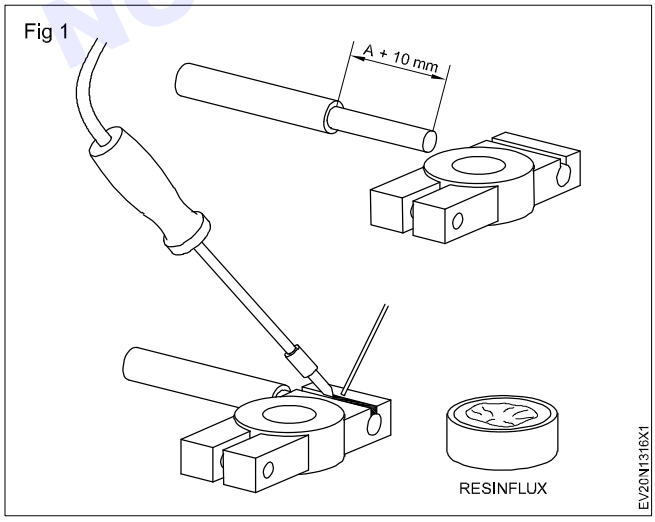

3 Hold the clamp in a vice in between two wooden blocks to prevent heat flow to vice.

4 Connect a 1000w/220v soldering iron to an AC source. Keep the iron on a brick.

Do not over heat the iron. Overheating would impair wetting of iron. Wetting means coating soldering iron with solder.

5 Solder the end with clamp face with molten solder.

6 Hold the clamp horizontally and solder the split and close the split with solder.

7 Hold the clamp as shown in the Fig 1 and solder around the cable without melting the insulating sleeve.

Wound the insulation material with a wet cloth near the soldering end to prevent melting.

Soldering the circuit wire terminals

1 Remove the insulation as shown in the Fig 2 without cutting conductor strands.

2 Connect a soldering iron of 300w/220v to an AC supply and keep the iron on a brick.

3 Clean the copper strands with emery paper.

Fig 2

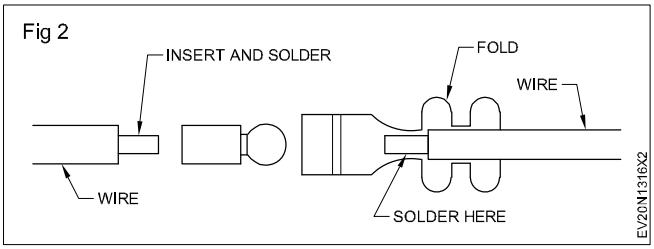

4 Twist the end neatly.

5 Keep the end on a wooden plank.

6 Wet the iron with soft solder.

Do not over heat the iron

7 Coat the end with solder.

8 Insert the end into the small loop on the eyelet terminal.

9 Fold the terminal tabs one by one and crimp with a tool.

10 Now keep the clamp on wooden plank.

11 Keep the iron so that a wide area of contact is achieved for better heat transfer to obtain a molten flow of soft solder.

12 Wait for solidification of solder and inspect the result. Repeat the same operation for other terminal soldering.

Insulting the wires and cables

For small wires and cables various sizes of insulation sleeves are available. These sleeves can be inserted before soldering the terminals.

13 Construct a simple circuit by using wire and soldering iron. Solder the wires as given circuit diagram.

— — — — — —

© NIMI
NOT TO BE REPUBLISHED

Practice on Measuring of current, Voltage and resistance by using digital multimeter

Objectives: At the end of this exercise you shall be able to
- **set the multimeter and check the continuity of multimeter probes**
- **measuring of current, voltage, and resistance of the serial circuit**
- **measure and verify by voltage, current, resistance in parallel circuit.**

Requirements

Tools / Instruments

- Trainee's tool kit - 1 No.
- Digital multimeter - 1 No.
- Am meter - 1 No.
- Voltage meter - 1 No.

Equipments/Machineries

- Circuit Board - 1 No.

Materials

- Volt meter - as reqd.
- Ammeter - as reqd.
- Resistor - as reqd.
- Hookup Wire - as reqd.
- Lug board - as reqd.
- Rosin cored solder - as reqd.
- Soldering flex - as reqd.

PROCEDURE

TASK 1: **Checking the continuity of digital multimeter probes**

Note: 1 The instructor has to explain the differences between the analog multimeter and digital multimeter

2 Provide digital multimeter to trainees and instruct to study the panel, ranges, scales, selector switch socket in it.

1 Observe and check the ranges available in the digital multimeter.

2 Plug the black color probe into the COM socket and plug the red color probe into the V Ω MA, socket of multimeter as shown in Fig 1.

3 Set the range selector switch to continuity buzzer position on the DMM.

4 Touch both the open ends of test probes and observe for the Zero ohm on the display and listen to the buzzer sound.

Fig 1

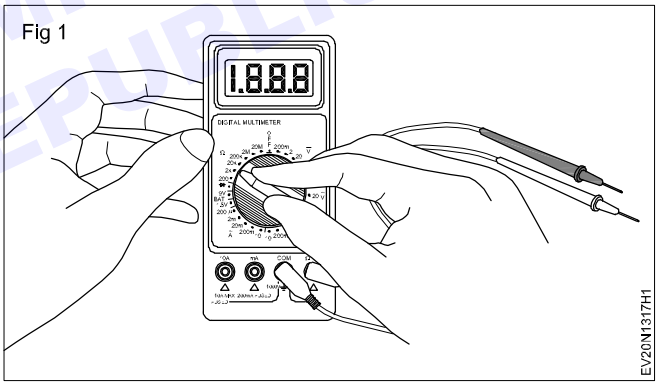

5 Record your observations in your note book and ensure the continuity of the meter probes.

6 Get the work checked by your instructor.

7 Select the multimeter knob as your requirement of measurement range based on voltage, current and resistance.

— — — — — —

TASK 2: **Checking the continuity of wires**

1 Select two assorted wires of any length.

2 Mark 10mm and skin the insulation at both the ends of the wires using stripper as shown in Fig 1.

Fig 1

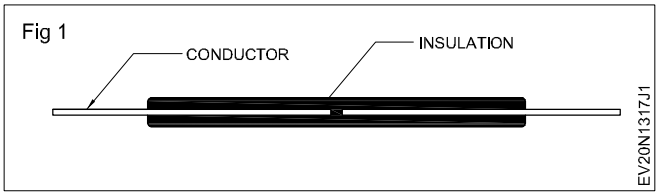

3 Ensure that the DMM is set to continuity/buzzer position.

4 Connec the both skinned ends of the wire across the open ends of test probes and observe for buzzer sound and zero display on the meter.

5 Record the observation in Table -1.

6 Repeat steps 2 to 5 for the other wire also.

7 Get the work checked by your instructor.

© NIMI NOT TO BE REPUBLISHED

TASK 3: **Measurements on Series Circuit**

1 Connect the resistors in series and also wire up the voltmeters and ammeters as shown in Fig 1.

Fig 1

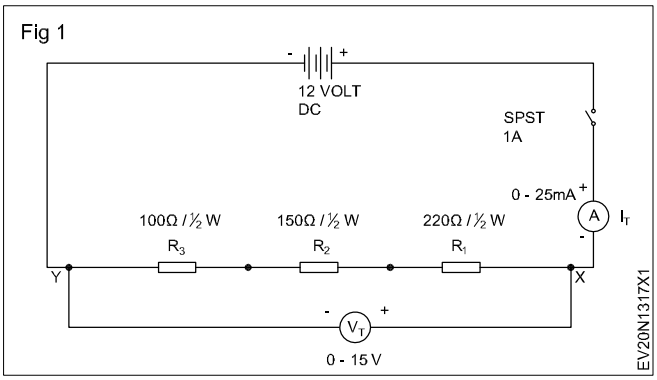

2 Measure resistance across each resistor using multi-meter and record in Table-1.

3 Measure the total resistance using multi-meter between the terminals X & Y.

4 Switch ON the RPSU and set the output voltage to 12 Volts.

5 Close the switch and measure the Current (I_T) and Voltage (V_T).

6 Enter the measured value in Table-1.

7 Switch OFF the supply. Reconnect the ammeter and voltmeter as shown in Fig 2.

Fig 2

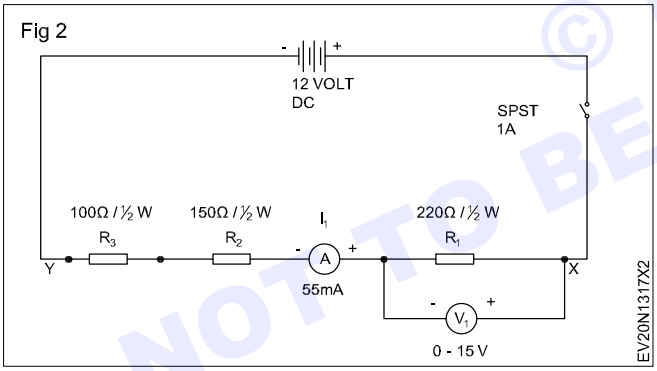

8 Measure and record the Voltage (V_1) and Current (I_1) through Resistor R_1.

9 Switch OFF the supply. Reconnect the ammeter and voltmeter as shown in Fig 3.

Fig 3

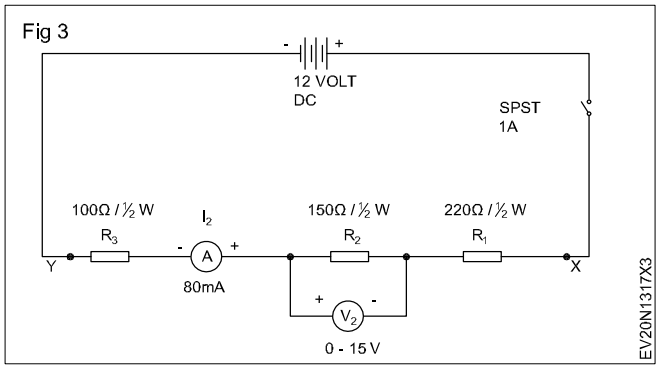

10 Measure and record the Voltage (V_2) and Current (I_2) through Resistor R_2.

11 Switch OFF the supply. Reconnect the ammeter and voltmeter as shown in Fig 4.

Fig 4

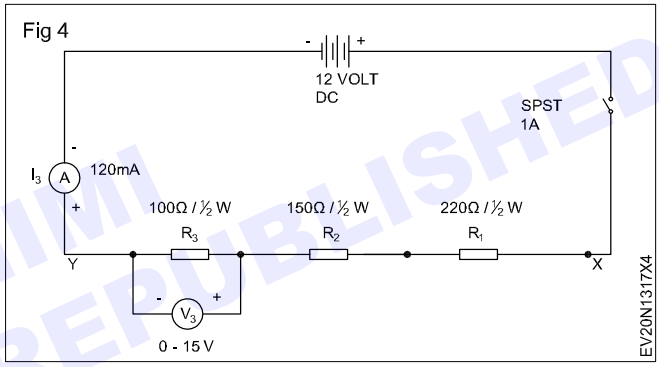

12 Measure and record the Voltage (V_3) and Current (I_3) through Resistor R_3.

13 Calculate total resistance, total current, total voltage using measured values.

14 Verify the laws of series circuit and Compare the values with the calculated values.

15 Get the work checked by the Instructor.

© NIMI NOT TO BE REPUBLISHED

Table 1

R_1	R_2	R_3	R_T	V_T	I_T	V_1	I_1	V_2	I_2	V_3	I_3

— — — — — —

© NIMI NOT TO BE REPUBLISHED

TASK 4: **Connect DC parallel circuit (Fig 1) and Verify its characteristics**

1 Form the branches 1, 2, 3 by connecting the torch lamps L1, L2, L3 (150 mA, 6v) with a holder, an ammeter A4 (500 mA) and switch 'S4' in series Fig 1.

Fig 1

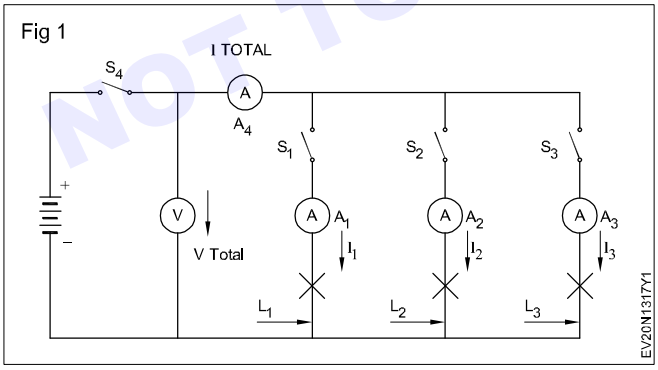

2 Connect the lamp terminals of the three branches together.

3 Connect the leads of each branch together and also connect with the lead of the switch S4.

4 Form the circuit as shown in circuit diagrams with voltmeter (V), ammeter (A4), switch 'S4' and battery.

5 Close the switch 'S4' and switch 'S1' in branch 1.

6 Read the ammeters 'A4' and 'A1' and record the values in Table 2.

7 Close the switches 'S4' 'S1' and 'S2' in branch 2.

8 Read the ammeters 'A4' 'A1' and 'A2' and record the values in Table 2.

9 Close the switches 'S4' 'S1' and 'S2' in branch 3.

10 Read the ammeters 'A4' 'A1' 'A2' and 'A3' and record the values in Table 1.

11 Repeat the above steps after clamping the torch lamp in any one branch with 6v 300 mA lamp and record the results in Table 1.

12 Repeat the exercise by replacing all the three 'lamps with holder' by 'wire-wound resistors' (two numbers of 100 ohms and one of 150 ohms).

13 Verify the characteristics of current, voltage and resistance.

Table 1

Sl. No.	I_1	I_2	I_3	I_{Total}	Switches closed	Components in the branches
1					S_4, S_1	3 lamps of 150 mA.
_					S_4, S_1, S_2	,,
3					S_4, S_1, S_2, S_3	,,
4					S_4	,,
5					S_4, S_1	2 lamps of 150 m and one lamp 300 mA.
6					S_4, S_1, S_2	,,
7					S_4, S_1, S_2, S_3	,,
8						Resistors - two 100 ohms and one 50 ohms.
9					S_4, S_1, S_2	,,
10					S_4, S_1, S_2, S_3	,,

— — — — — —

© NIMI
NOT TO BE REPUBLISHED

Practice on Continuity test for fuses, jumper wires, fusible links and circuit breakers

Objectives: At the end of this exercise you shall be able to
- **check the continuity of fuses**
- **check the jumper wire connections**
- **check the fusible link**
- **check the circuit breaker.**

Requirements

Tools / Instruments

- Trainee's tool kit - 1 No.
- Multimeter - 1 No.
- Test Lamp - 1 No.
- Voltage meter - 1 No.

Equipments / Machineries

- Vehicle with battery - 1 No.

Materials

- Fuses - as reqd.
- Jumper wire - as reqd.
- Fusible link - as reqd.
- Circuit breaker - as reqd.
- Insulation tape - as reqd.
- Cotton waste - as reqd.
- Soap Oil - as reqd.

PROCEDURE

TASK 1: **Check the fuses of all the lighting units**

1 Check the battery for its charge.

2 Connect the test lamp clip to a good ground.

3 Touch the probe of the test lamp on either end of the fuse. If the test lamp lights, the fuse is in good condition.

If the test lamp lights only while touching one side that means the fuse is defective. If the test lamp does not light even on touching both the sides that means the power source is not on or the ground connection is bad.

4 Remove the fuse from its spring clip. Check whether it is blown or not.

If it is blown we can see through the glass tube.

If the fuse is blown due to short circuit the colour of glass tube becomes black (1) and the fuse wire melts like small balls. (Fig 1)

If the fuse is blown (2) due to overload the fuse wire is simply cut off. (Fig 2)

Fig 1

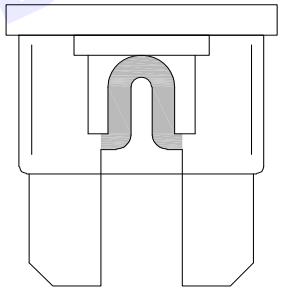

Fig 2

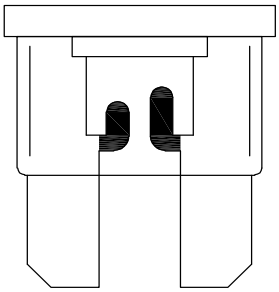

© NIMI NOT TO BE REPUBLISHED

— — — — — —

TASK 2: **Connect jumper wire in battery**

1 Park the vehicle, on level ground and apply hand brake.

2 Open the bonnet and secure with the holding lever.

3 Place the fully charged battery adjacent to the vehicle discharge battery.

4 Connect the two battery terminal in parallel by using jumper wire cables as shown in Fig 1.

5 Start the vehicle run for some times.

6 Disconnect the jumper cables from the vehicle battery terminal.

7 Now the vehicle will run with its own battery.

8 Close the bonnet, securely.

Fig 1

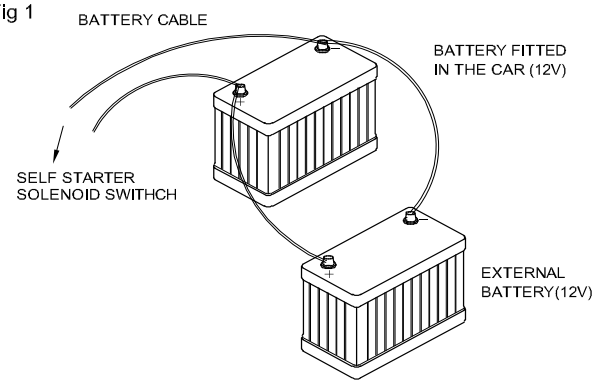

JUMP STARTING OF AN ENGINE BY USING EXTERNAL BATTERY IN PARALLEL CONNECTION

— — — — — —

TASK 3: **Check of fusible link (Fig 1)**

1 Visually inspect the fusible link for burnout, disconnect, and damaged.

2 Check with the multimeter for continuity test.

3 Replace the fusible link if damaged, burnout or disconnected.

Replacing fusible links (Fig 1) is little bit complex than simply pulling a fuse, since they are bolted in place and are sometimes difficult to reach.

Using the right tools and finding the blown fusible link location is important.

And also it is very important to use the correct replacement of fusible link's size and length.

Never replace fusible link with normal electrical wire.

Fig 1

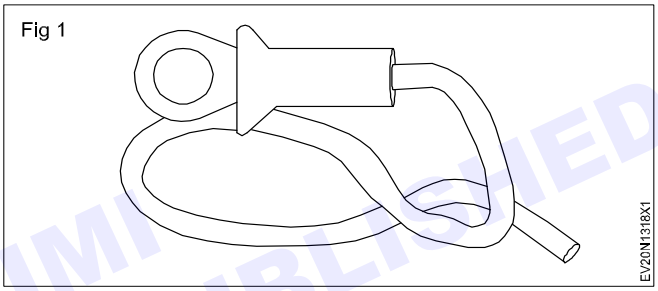

© NIMI NOT TO BE REPUBLISHED

— — — — — —

TASK 4: **Check circuit breaker (Fig 1)**

1 Find the location of circuit breaker.

2 Check the bimetallic strip (1).

3 Check the moving contact point (2).

4 Check the fixed contact point (3).

5 Check circuit breaker terminals (4) & (5).

6 Identify the damaged parts during visual inspection of above mentioned parts.

7 If find any damaged parts in circuit breaker, replace the part or replace the assembly.

8 If contact point (2) & (3) pitted, file the surface and adjust it.

10 Ensure the proper function of circuit breaker.

Fig 1

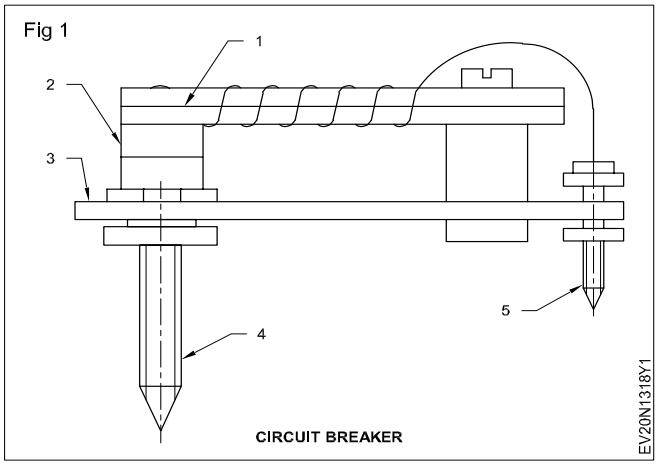

CIRCUIT BREAKER

— — — — — —

Practice on identify and diagnose the various electrical circuits

Objectives: At the end of this exercise you shall be able to
- **check the DC series circuit joints**
- **check the DC parallel circuit joints**
- **check the DC series parallel circuit.**

Requirements

Tools / Instruments

- Trainee's tool kit - 1 No.
- Multimeter - 1 No.
- Ohm meter - 1 No.

Equipment / Machines

- Battery 12V - 1 No.
- Vehicle - 1 No.

Materials

- Wires 4 mm - as reqd.
- Insulation tape - as reqd.
- Emery paper - as reqd.
- Soap oil - as reqd.
- Cotton waste - as reqd.
- Wire clip - as reqd.

PROCEDURE

TASK 1: **Identify and diagnose the series circuit**

1 Select the any one of electrical circuit in a electric vehicle.

2 Identify the components fitted in a circuit.

3 Identify the value of the components.

4 Support the circuit as shown in Fig 1 follow the steps to diagnosis a circuit.

Fig 1

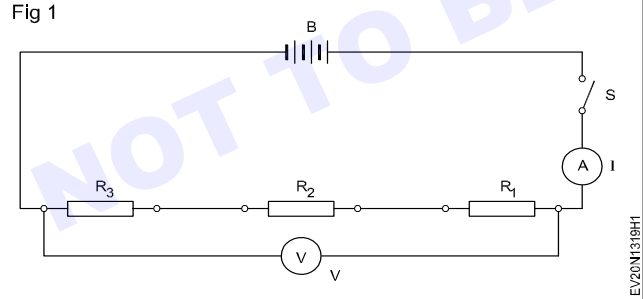

5 Close the switch 'S', measure the current 'I' and voltage 'V'.

6 Enter the measured values in Table 1.

Fig 2

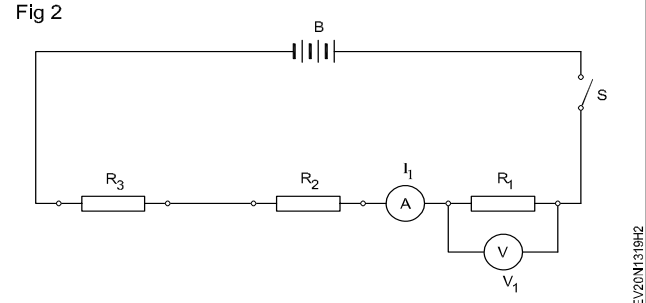

7 Switch off the supply, connect the ammeter and voltmeter as shown in the Fig 2. Switch on the supply and measure voltage V_1 and current I_1 through R_1.

8 Switch off the supply, connect the ammeter and voltmeter as shown in the Fig 3. Switch on the supply and measure the voltage V_2 and the current I_2 in R_2.

Fig 3

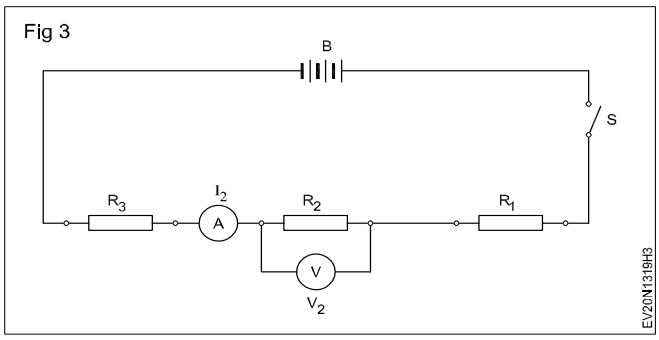

9 Draw circuit diagram showing the position of 'A' and 'V' in the circuit to measure the current I_3 and voltage V_3 across R_3.

10 Connect and measure I_3 and V_3 across R_3.

11 Enter the measured values in Table 1.

© NIMI NOT TO BE REPUBLISHED

Table 1

Values	Total circuit	$R_1 = 10$	$R_2 = 20$	$R_3 = 10$
Current	I =	I_1 =	I_2=	I_3=
Voltage	V =	V_1 =	V_2=	V_3=
Resistance	R =	R_1=	R_2=	R_3=

— — — — — —

TASK 2: **Identifying and testing the DC parallel circuit diagram.**

1 Select the D.C parallel circuit diagram.

2 Form the branches 1,2,3 by connecting double contact single filament 20W bulbs L_1, L_2, L_3 with a holder, an ammeter A4 of 0-30 Amp DC (1 Amp.DIV) and switch 'S_4' in series. (Fig 1)

Fig 1

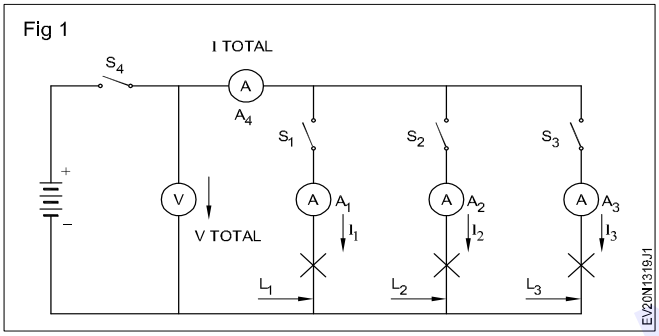

3 Connect the lamp terminals of the three branches connect with the lead of the switch S_4.

4 Form the circuit as shown in circuit diagrams with voltmeter (V), ammeter (A_4), switch 'S_4' and battery.

5 Close the switch 'S_4' and switch 'S_1' in branch 1.

6 Read the ammeters 'A_4' and 'A_1' and record the values in Table 1.

7 Close the switches 'S4' , 'S1' and 'S2' in branch 2.

8 Read the ammeters 'A4' 'A1' and 'A2' and record the values in Table 1.

9 Close the switches 'S4', 'S1', 'S2', and 'S3' in branch 3.

10 Close the switches 'S4', 'S1', 'S2' and 'S3' in branch 3.

11 Read the ammeters 'A4' 'A1' 'A2' and 'A3' and record the value in Table 1.

12 Repeat the above steps after clamping the torch lamp in any one branch with 6v 300 mA lamp and record the results in Table 1.

13 Repeat the exercise by replacing all the three 'lamps with holder' by wire-wound resistors' (two numbers of 100 ohms and one of 150 ohms).

Table 1

Sl. No.	I_1	I_2	I_3	I	Total	Switches closed	Components in the branches
1						S_4, S_1	3 lamps of 1.7 Amps each
2						S_4, S_1, S_2	,,
3						S_4, S_1, S_2, S_3	,,
4						S_4	,,
5						S_4, S_1	2 lamps of 1.7 Amps lamp and one 300mA
6						S_4, S_1, S_2	,,
7						S_4, S_1, S_2, S_3	,,
8						S_4, S_1	Resistors two-one 100 ohms and another 150 ohms
9						S_4, S_1, S_2	,,
10						S_4, S_1, S_2, S_3	,,

— — — — — —

© NIMI NOT TO BE REPUBLISHED

TASK 3: **Identifying and testing the DC Series parallel circuit.**

Prepare the D.C series parallel circuit diagram

1 Calculate the voltage and currents for the series parallel circuit shown in Fig 1. Enter the values in Table 1.

2 Calculate the total resistance R_T and total current I_s for V_s = 50V and enter in Table 1.

3 Set the value of the rheostat resistances equal to the value given in Fig 1 (i.e. R_1 = 25 ohms, R_2 = 300 ohms, R_3 = 40 ohms and R_4 = 60 ohms by measuring the resistance value between one end and the variable point of the rheostat).

4 Form the circuit and measure the voltage and current. Record them in your note book.

5 Calculate the value of R_T from V_s and I_s and record them in your note book and Compare with the value obtained in step 3.Enter the measured value in table 2.

Fig 1

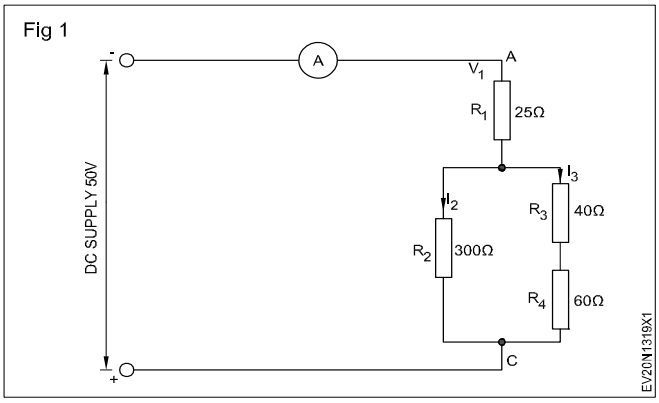

Table 1

		V_{RI}	I_S	I_2	V_{R2}	I_3	V_{R2}	I_3	V_{R3}	R_3+R_4	$R_2 \angle\angle (R_3+R_4)$
V_s = 50V R_1 = 25W R_2 = 300W R_3 = 40W R_4 = 60W	Calculated Values										
	Measured Values										

Table 2

Calculated Values	$R_T = R_1 + R_1\{R2 \angle\angle (R_3 + R_4)\}$ =
Measured Values	

© NIMI NOT TO BE REPUBLISHED

— — — — — —

Practice on measure the voltage drop in a circuit

Objective: At the end of this exercise you shall be able to
- **test the voltage drop in a circuit.**

Requirements

Tools / Instruments

- Trainee's tool kit - 1 No.
- Voltmeter MC 0 - 300 V - 1 No.
- Multimeter - 1 No.

Equipment / Machines

- Auto electrical wiring circuit - 1 No.
- Battery - 1 No.
- Vehicle - 1 No.

Materials

- Fuse - as reqd.
- Switch - as reqd.
- Cable/Wire - as reqd.
- Sandpaper - as reqd.
- Cleaning cloth - as reqd.
- Baking soda - as reqd.
- Petroleum jelly - as reqd.
- Distilled water - as reqd.
- Cleaning brush, 2 inch - 1 No./batch.

PROCEDURE

TASK 1: **Measure voltage drop in circuit**

1 Clean all the terminals, connectors in the auto electrical wiring circuits.

2 Check, whether battery is fully charged condition.

3 Connect the multimeter as shown in Fig 1 in the auto electrical wiring circuit.

4 Connect (+)ve lead to the input terminal of the motor.

5 Connect (-)ve lead to the battery +ve terminal.

6 Read the voltage in the multimeter.

7 Remove, clean and refit (or) Replace the terminal if voltage drop exceeds 0.2 V.

8 Select a low scale on the voltmeter.

Fig 1

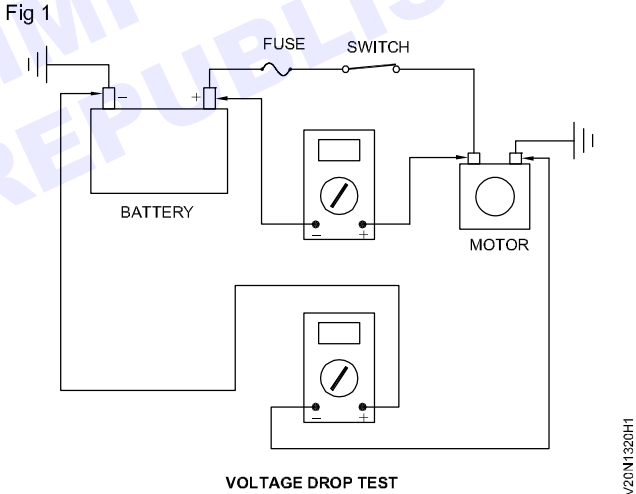

VOLTAGE DROP TEST

© NIMI NOT TO BE REPUBLISHED

— — — — — —

Practice on measure current flow in head light circuit

Objective: At the end of this exercise you shall be able to
- **measure the current flow in a head light circuit.**

Requirements

Tools / Instruments

- Trainee's tool kit - 1 No.
- Vehicle manual - 1 No.
- Multimeter - 1 No.
- Ammeter - 1 No.

Equipment / Machines

- Electric Vehicle - 1 No.

Materials

- Cotton waste - as reqd.
- Soap oil - as reqd.
- Wire - as reqd.
- Insulation tape - as reqd.
- Fuse - as reqd.

PROCEDURE

TASK 1: **Measuring the current flow and diagnosing trouble in a circuit by using ammeter/multimeter.**

- Park the electric vehicle on the shop floor.
- Study the vehicle manual for lighting circuits and their wire connections.
- Trace the lighting circuits wire connections of vehicle
- Select the anyone lighting circuit of the vehicle for current flow through the wiring of the circuit.
- Select the low value ammeter or multimeter for measure the current flow in a vehicle wiring circuit.
- Suppose if you are select the head light circuit, trace the circuit wire connections and switches with in a circuit.
- Check the battery charge condition with help of voltmeter/multimeter.
- Ensure vehicle battery should be full charged.
- Ensure the ignition switch is in 'OFF' position.
- Make a gab in a circuit to connect the multimeter or ammeter.
- Suppose if you are using a multimeter, set the multimeter range as specified power range by vehicle manufacturer.
- Connect the multimeter/ammeter in series with in the lighting circuit.(Fig 1)
- Ensure the +Ve and -Ve connections are properly connected in a circuit.
- Switch on the ignition switch and head light switch.
- Note the reading shown in the multimeter/ammeter.
- Switch off the head light switch and disconnect the meter connection and connect the circuit wires.
- Make a gab in another place of circuit and connect the multimeter/ammeter in series to the circuit.
- Switch on the power and measure the current flow through the circuit
- Note the ammeter reading shown in multimeter/ ammeter
- Compare it with specified value of vehicle manufacturer.
- Switch off the head light power flow and disconnect the multimeter and connect circuit wires.
- If found any malfunctioning in current flow rate diagnosis the fault in a circuit and rectify it
- Ensure there is no faulty accessories/loose connection/damaged wires/damaged connector/ switches/fuse/rusty grounding etc.
- After rectifying the fault again check the current flow ampere rate in a circuit as following above steps.
- Ensure circuit current flow rate as specified limit recommended by the vehicle manufacturer

© NIMI NOT TO BE REPUBLISHED

Fig 1

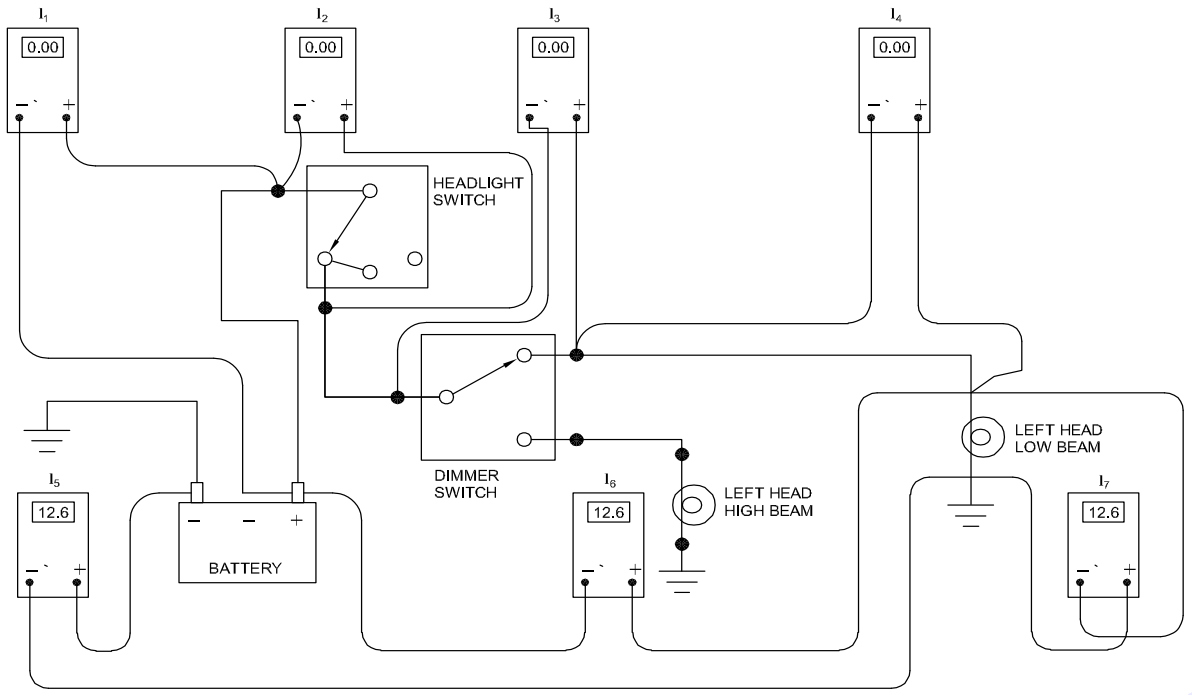

NOTE : I - CURRENT

MEASURING CURRENT FLOW IN A HEADLIGHT CIRCUIT

EV20N1321H1

© NIMI NOT TO BE REPUBLISHED

— — — — — —

Practice on testing of solenoid, relay and its circuit

Objective: At the end of this exercise you shall be able to
- **test the solenoid in the wiring circuit**
- **test the relay in the wiring circuit.**

Requirements

Tools / Instruments

- Trainee's tool kit - 1 No.
- Multimeter - 1 No.
- Test Lamp - 1 No.

Equipment / Machines

- Electric Vehicle - 1 No.
- Test bench - 1 No.
- Battery 12V - 1 No.

Materials

- Cotton waste - as reqd.
- Soap oil - as reqd.
- Solenoid - as reqd.
- Relay - as reqd.
- Wire - as reqd.
- Insulation Tape - as reqd.

PROCEDURE

TASK 1: **Testing a solenoid in wiring circuit**

- Park the electric vehicle on the repair shop.
- Identify the solenoid included wiring circuit in a vehicle like power window, centre lock etc.
- Operate any one solenoid fitted circuit, if found malfunction of the circuit remove the solenoid from the circuit.
- Visually check the solenoid for defects and follow the steps to test the solenoid.
- Solder 0.5 meters wires at terminals A and B of the solenoid.
- Place the solenoid on a wooden board and clamp the solenoid as shown in Fig 2.
- Set current limit of PSU to 1A. Set output voltage to Zero. Switch OFF PSU. Make circuit connections as shown in Fig. 1.

Fig 1

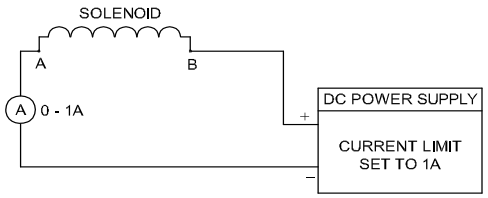

- Place a soft iron rod slightly inside (10 to 15mm) the hole of the solenoid as shown in Fig 2a.

In case a 6mm soft iron rod is not available, use a thick & lengthy iron nail.

- Switch ON PSU. Increase the output voltage of the PSU gradually from 0 volts till the soft iron rod gets attached by the solenoid as shown in Fig 2b. Record the circuit voltage and current in O&T sheet.

Observe the pulled iron rod rests at the center along the length of the solenoid (refer lesson).

If the soft iron is not attracted even when the circuit current is more than 250 mA, Switch-OFF PSU and consult your instructor.

- Pull out the iron rod not slightly from the solenoid and release it. Check if the rod is pulled back inside the hole.
- Repeat the above steps for a few more times till you are satisfied about the working of the solenoid. Get it checked by your instructor.
- Switch OFF PSU, Remove circuit connections. Take out the solenoid by removing the clamp.
- Fix the solenoid in a parent circuit and test its for proper function.

Fig 2

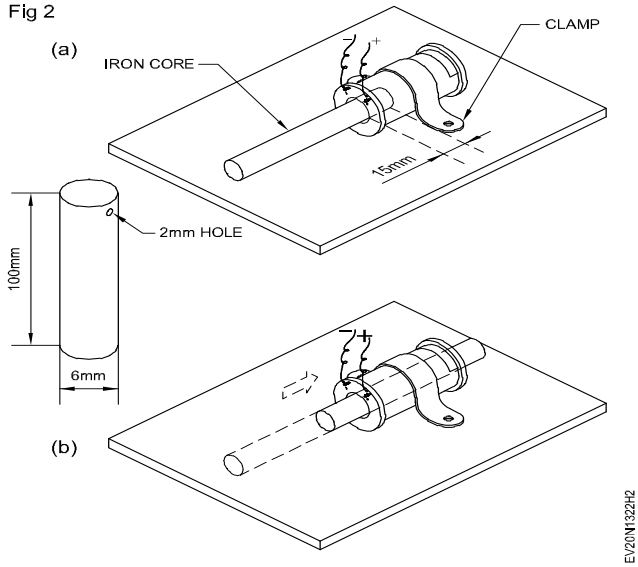

© NIMI NOT TO BE REPUBLISHED

TASK 2: **Checking a relay in horn circuit**

1 Disconnect the electrical connection from the horn relay (5) as shown in Fig 1.

Fig 1

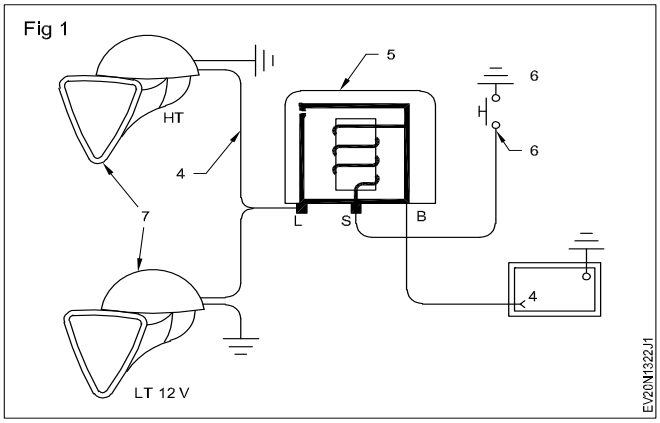

2 Loosen the mounting nuts of the horn relay and remove it.

3 Check the condition of the horn relay using a rheostat and volt meter.

4 Connect the rheostat (1) in series to the battery and horn relay (3) (Fig 2).

5 Connect the volt meter (2) across the winding of the relay (3) to measure the closing voltage as shown in Fig (2).

6 Start the full resistance in the circuit. Slide the knob to increase or decrease the voltage on the relay winding.

If there is an error when the relay point closes, adjust by bending the armature spring post

(Increasing the spring tension increases the closing voltage)

Fig 2

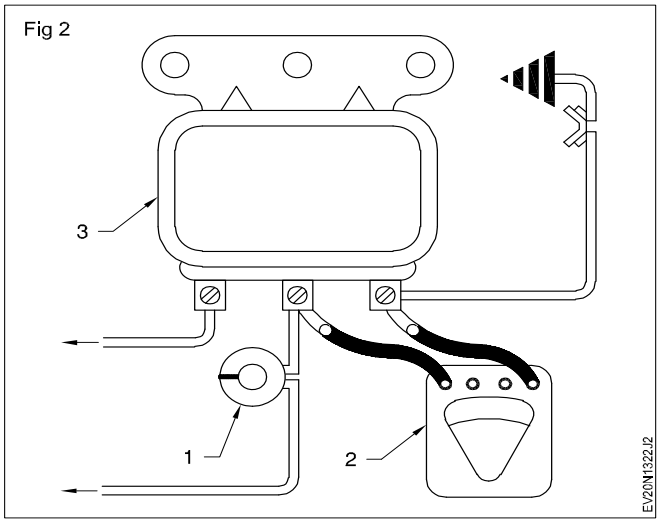

7 Replace the relay, if necessary.

8 Place the horn relay in its position and tighten the mounting nuts.

9 Refit the spring and the horn switch.

10 Fit the retainer and press it.

11 Connect the wires to the switch of the horn relay and sound the horn.

12 Operate the horn switch and test for the correct horn.

Note:

Checking HL & Wiper motor relay.

Repeat the Task of checking the Relay.

— — — — — —

© NIMI NOT TO BE REPUBLISHED

Practice to identify and check the power & signal connectors

Objectives: At the end of this exercise you shall be able to
- **identify the power and signal connector**
- **verify selected connector continuity.**

Requirements

Tools / Instruments

- Trainee's tool kit - 1 No.
- Multi meter - 1 No.

Equipment / Machines

- Electric vehicle - 1 No.

Materials

- Cotton waste - as reqd.
- Cable connector - as reqd.
- Sensors - as reqd.
- Insulation tap - as reqd.
- Cables - as reqd.
- Blue, yellow, black Red color Red color sleeve wire - as reqd.
- Patch cords - as reqd.

PROCEDURE

TASK 1: **Check the power and signal connectors.**

- Park the electric vehicle on the shop floor.
- Study the vehicle manual for trace the electrical wire connectors .
- Trace the wiring circuits.
- Identify the different type of wire connectors used in a wiring circuits.
- Check the each wiring power and signal connector of a vehicle as following method.

Check the open circuit

1 Check loose connection of connectors of wiring circuit.

2 Check poor contact of terminal (due to dirt, corrosion or rust on it, poor contact tension, entry of foreign object etc.

3 Check wire harness being open power & signal connectors for continuity.

Check a cable loose connection (Fig 1)

1 Disconnect negative cable from battery.

2 Check each connector at both ends of the circuit being checked for loose connection (Fig 1). Also check lock condition of connector if equipped with connector lock.

3 Using a test male terminal, check both terminals of the circuit being checked for contact tension of its female terminal. by dirt, corrosion, rust entry of foreign object, etc) (Fig 2).

At the same time, check to make sure that each terminal is locked in the connector fully. (Fig 3)

Fig 1

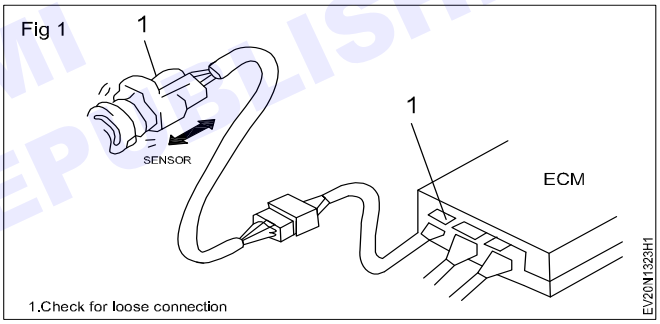

1.Check for loose connection

Fig 2

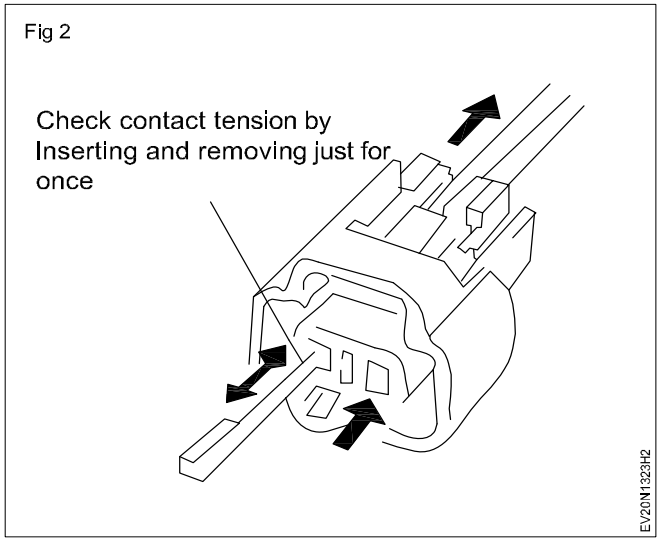

4 Check the wire harness for open circuit and poor connection with its terminals. Locate abnormality, if any. (Fig 4)

© NIMI NOT TO BE REPUBLISHED

Fig 3

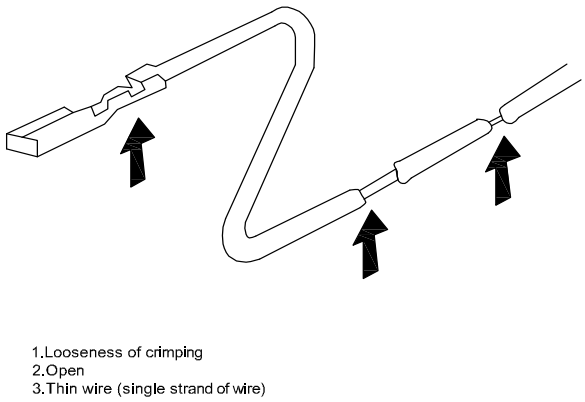

Fig 4

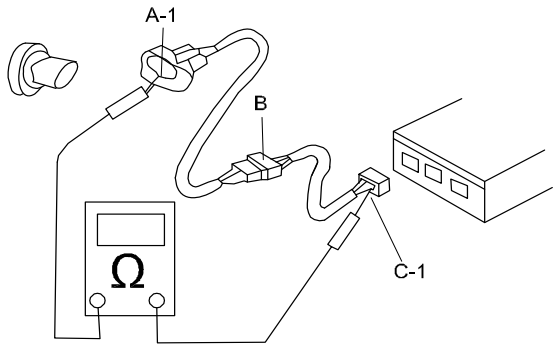

Continuity check

5 Measure resistance between connector terminals at both ends of the circuit being checked (between A-1 and C-1 in the figure).

If no continuity is indicated (infinity or over limit), that means that the circuit is open between terminals A-1 and C-1. (Fig 5)

Fig 5

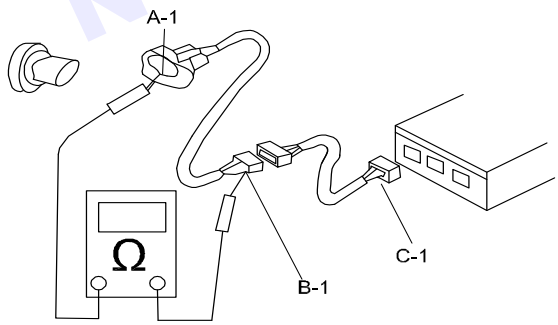

6 Disconnect the connector included in the circuit (Connector-B in the figure) and measure resistance between terminals A-1 and B-1.

If no continuity is indicated, that means that the circuit is open between terminals A-1 and B-1. If continuity is indicated, there is an open circuit between terminals B-1 and C-1 or an abnormality in Connector-B.

Voltage check (Fig 6)

If voltage is supplied to the circuit being checked, Voltage check can be used as circuit check.

7 With all connectors connected and voltage applied to the circuit being checked, measure voltage between each terminal and body ground.

If measurements were taken as shown in the figure at the left and results were as listed below, it means that the circuit is open between terminals B-1 and A-1.

Fig 6

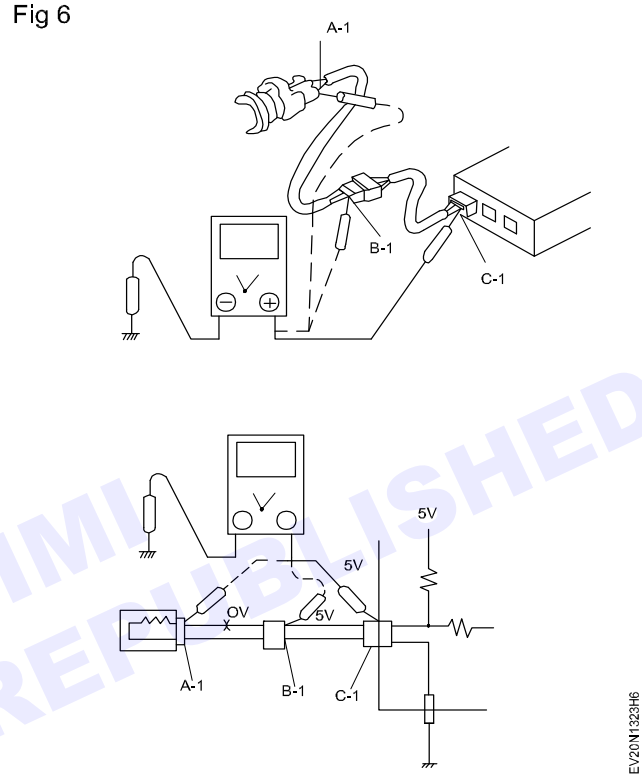

Voltage Between:

C-1 and body ground: Approx. 5V
B-1 and body ground: Approx. 5V
A-1 and body ground: 0V

Also, if measured values were as listed below, it means that there is a resistance (abnormality) of such level that corresponds to the voltage drop in the circuit between terminals A-1 and B-1.

Voltage Between:

C-1 and body ground: Approx. 5V
B-1 and body ground: Approx. 5V 2V voltage drop
A-1 and body ground: Approx.3V

Short circuit check (Wire harness to ground) (Fig 7)

8 Disconnect negative cable from battery.

9 Disconnect connectors at both ends of the circuit to be checked.

Note: If the circuit to be checked is connected to other parts, disconnect all connectors of those parts. Otherwise, diagnosis will be mislead/wrong.

© NIMI NOT TO BE REPUBLISHED

10 Measure resistance between terminals at one end of circuit (A -1 terminal in figure) and body ground. If continuity is indicated, it means that there is a short to ground between terminals A-1 and C -1 of the circuit.

11 Disconnect the connector included in circuit (connector B) and measure resistance between A-1 and body ground. (Fig 7)

If continuity is indicated, it means that the circuit is shorted to the ground between terminals A-1 and B-1. (Fig 8)

Fig 7

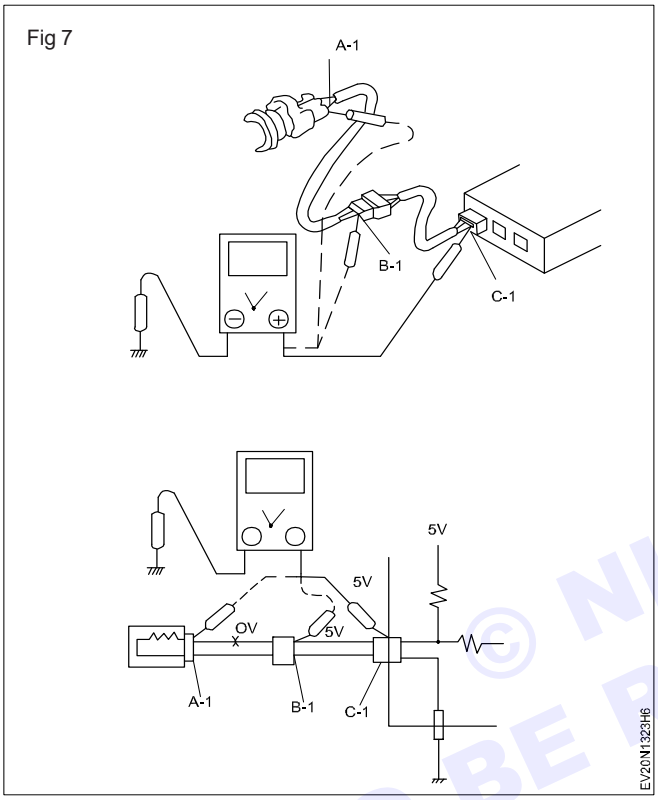

Fig 8

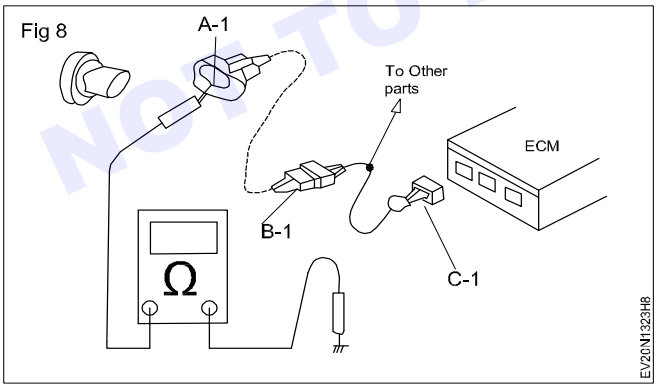

Intermittent and poor connection (Fig 9, 10)

Most intermittents are caused by faulty electrical connections or wiring, although a sticking relay or solenoid can occasionally be at fault. When checking it for proper connection, perform careful check of suspect circuits for:

12 Poor mating of connector halves, or terminals not fully seated in the connector body (backed out).

13 Dirt or corrosion on the terminals. The terminals must be clean and free of any foreign material which could impede proper terminal contact.

Fig 9

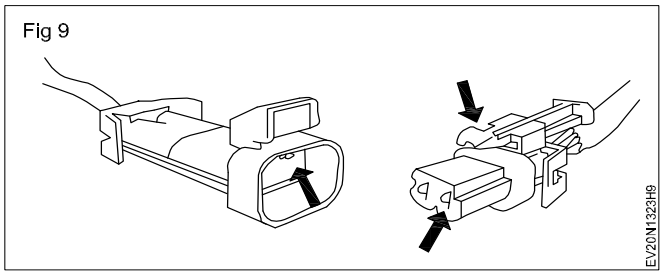

Fig 10

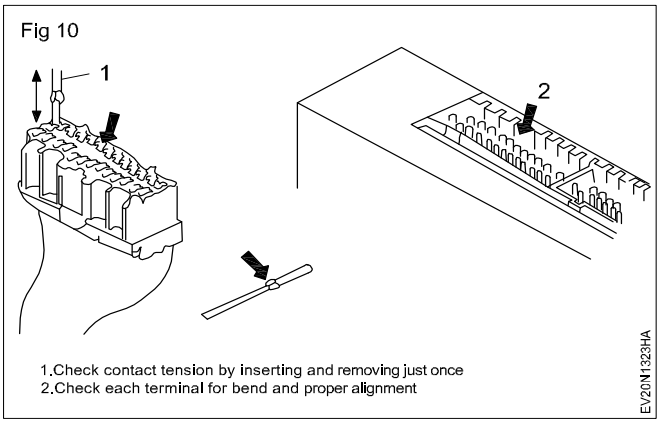

14 Damaged connector body, exposing the terminals to moisture and dirt, as well as not maintaining proper terminal orientation with the component or mating connector.

15 Improperly formed or damaged terminals.

Check each connector terminal in problem circuits carefully to ensure good contact tension by using the corresponding mating terminal. If contact tension is not enough, reform it to increase contact tension or replace.

16 Poor terminal - to - wire connection. (Fig 11)

Check each wire harness in problem circuits for poor connection by shaking it by hand lightly. If any abnormal condition is found, repair or place.

Fig 11

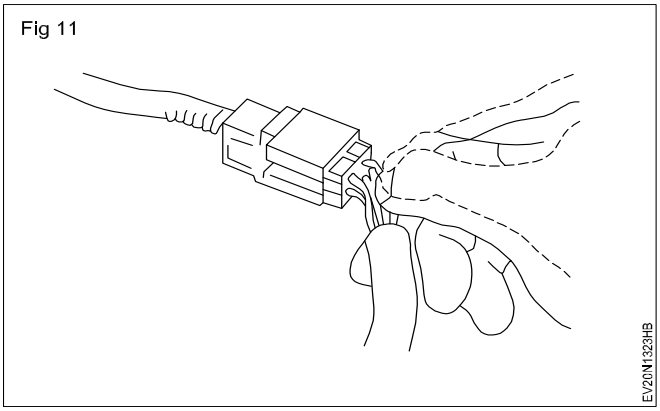

17 Wire insulation which is rubbed through, causing an intermittent short as the bare area touches other wiring or parts of the vehicle.

18 Wiring broken inside the insulation (Fig 12). This condition could cause continuity check to show a good circuit, but if only 1 or 2 strands of a multi-strand-type wire are intact, resistance could be far too high. If any abnormality is found, repair or replace.

© NIMI NOT TO BE REPUBLISHED

Precautions for electrical circuit service

19 When disconnecting and connecting coupler, make sure to turn ignition switch OFF, or electronic parts may get damaged.

20 Be careful not to touch the electrical terminals of parts which use microcomputers (e.g. electronic control unit like as ECM, P/S controller, etc.). The static electricity from your body can damage these parts. (Fig 13)

Fig 12

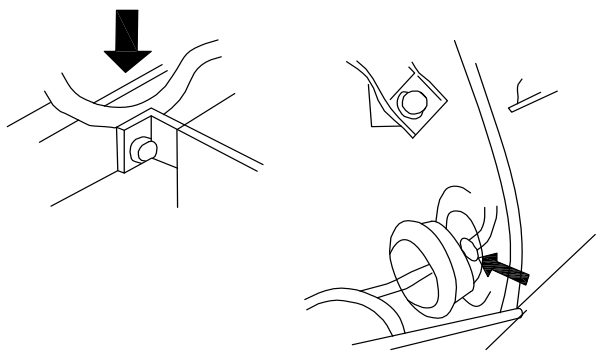

Fig 13

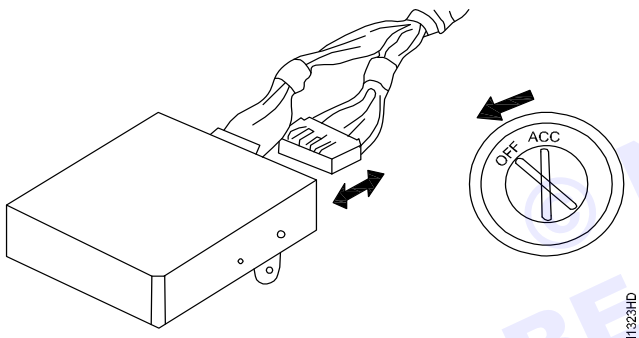

21 When disconnecting couplers, don't pull wire harness but make sure to hold coupler itself. With lock type coupler, be sure to unlock before disconnection. Attempt to disconnect coupler without unlocking may result in damage to coupler. When connecting lock type coupler, insert it till clicking sound is heard and connect it securely.

22 Never connect any tester (voltmeter, ohmmeter,) to electronic control unit when its coupler is disconnected. Attempt to do it may cause damage to it.(Fig 14)

23 Never connect an ohmmeter to electronic control unit with its coupler connected to it. Attempt to do it may cause damage to electronic control unit and sensors. (Fig 15)

Fig 14

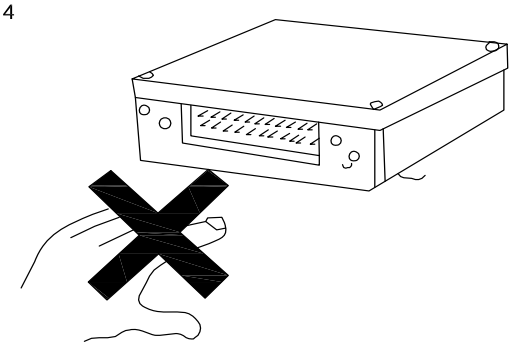

Fig 15

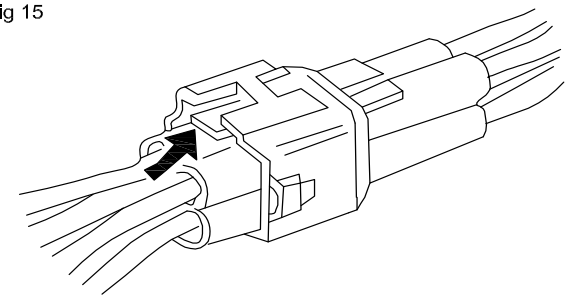

24 Be sure to use a specified voltmeter/ohmmeter. Otherwise, accurate measurements may not be obtained or personal injury may result. If not specified, use a voltmeter with high impedance (M /V minimum) or a digital type voltmeter.

25 When taking measurements at electrical connectors using a tester probe, be sure to insert the probe (2) from the wire harness side (backside) of the connector (1). (Fig 16)

Fig 16

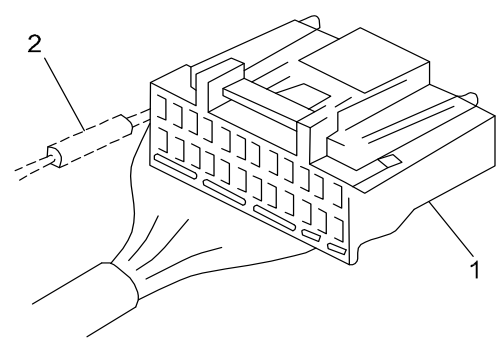

— — — — — —

© NIMI NOT TO BE REPUBLISHED

Practice on identify and test different types of diodes

Objectives: At the end of this exercise you shall be able to
- **identify the diode types and their specification**
- **test the diode using by multimeter**
- **determine the forward to reverse resistance ratio.**

Requirements

Tools / Instruments

- Trainee's tool kit - 1 No.
- Multi meter - 1 No.
- Semi conductor data manual - 1 No.

Materials

- Assorted type of diodes - as reqd.
- Patch cords - as reqd.
- Wire sleeve - as reqd.
- Diodes - as reqd.

PROCEDURE

TASK 1: **Identify the diode types and their specification**

The instructor should be label the different types of Diodes used for this exercise.

1 Pick one of the labelled diode from the given assorted lot.

2 Observe the code number printed on the diode and record in the Table-1.

3 For chosen diode, refer semiconductor data book/ manual and identify the type of diode, semiconductor material type of package.

4 Also record the maximum Forward Current, I_f, peak Inverse Voltage, PIV, forward Voltage Drop, V_f.

5 Repeat step-2 to 4 for all the remaining diodes, and record it in Table 1.

6 Get the work checked by the Instructor.

Fig 1

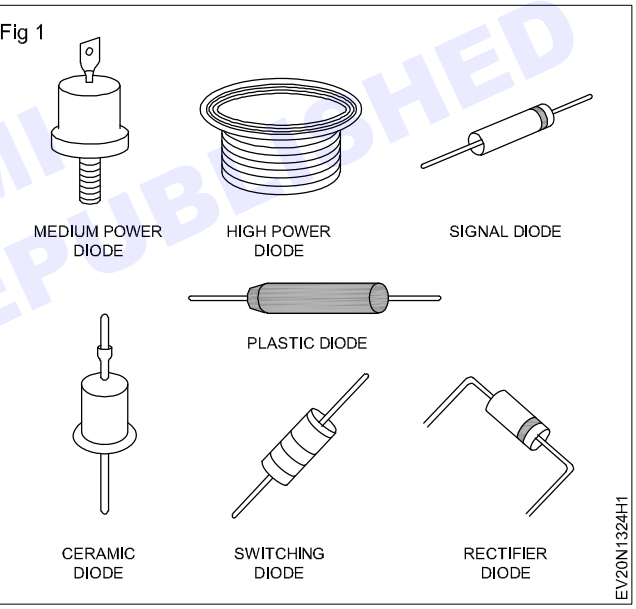

© NIMI NOT TO BE REPUBLISHED

Table 1

Label No.	Code No.of Diode	Type of Diode	Semiconductor Material	Type of Package	Maximum Forward Current I_f	Peak Inverse Voltage PIV	Forward Voltage Drop V_f
1							
2							
3							
4							

— — — — — —

TASK 2: **Testing the given diode by using multimeter and determine forward to reverse resistance ratio**

The instructor should be label the different types of diodes used for this exercise.

1 Pick one of the labelled diode from the given assorted lot. (Fig 1)

2 Set the multimeter to x100Ω range. Carry out resistance zero setting of the meter.

3 Connect the multimeter probes across the diode terminals as shown in the Fig 1a. Record the resistance reading shown by the meter in Table-1.

Fig 1

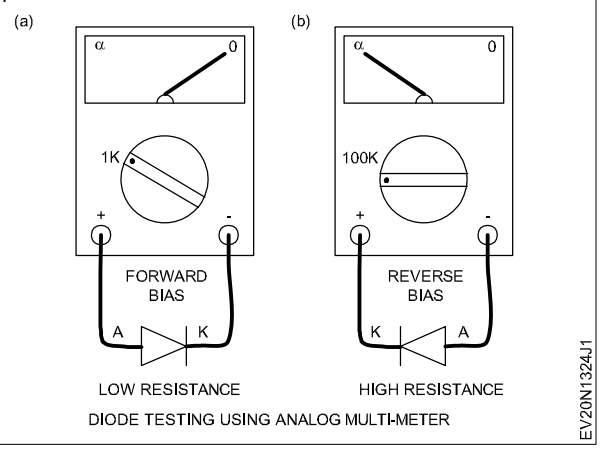

4 Reverse the meter probe connected to the diode as shown in the Fig 1b and record the reading shown by the meter in Table-1.

5 From the readings noted in step-3 and step-4 calculate and record the ratio between Forward resistance (R_F) to Reverse resistance (R_R).

6 From the recorded information given conclusion of diode.

- In good diodes, resistance will be less than 100Ω in one direction and very high or almost infinity/open in the other direction.
- In most cases the ratio between low to high resistance would be at 1:1000.
- If get zero both ways, the diode is shorted.
- If get INFINITY both ways, the diode is open.

7 Repeat step-3 to step-6 for all the remaining diodes, and record in Table 1.

8 Get the work checked by the Instructor.

Table 1

Label No.	Code No.of Diode	Forward Resistance (F_R)	Reverse Resistance (R_R)	Ratio of F_R/R_R	Serviceable/ Unserviceable
1					
2					
3					
4					

— — — — — —

© NIMI NOT TO BE REPUBLISHED

Practice on Check the functionality of NPN & PNP transistor

Objectives: At the end of this exercise you shall be able to
- **check the functionality of NPN and PNP transistor.**

Requirements

Tools / Instruments

- Trainee's tool kit - 1 No.
- Multi meter - 1 No.

Materials

- Cotton Waste - as reqd.
- Soap oil - as reqd.
- NPN PNP Transistor - as reqd.
- Wire - as reqd.
- Sleeve - as reqd.

PROCEDURE

TASK 1: **Identify the transistor type and leads, referring to data manual**

1 Take any one transistor from the given assorted lot, enter its label number and transistor type number in Table 1.

2 Refer to transistor data manual and find and record the following details of the transistor in Table 1 of O&T sheet.

– Whether silicon or germanium

– Whether NPN or PNP

– Type of packaging or case outline (Example: TO5, TO7 etc.)

3 From the type of package recorded, the transistor data manual and draw the pin diagram indicating base, emitter and collector for the transistor, in Table 1.

4 Put sleeves of suitable length, as shown in Fig 1, to the identified pins of the transistor using the color scheme given below.

Base	-	Blue color sleeve
Emitter	-	Red color sleeve
Collector	-	Yellow color sleeve
Shield	-	Black color sleeve

Fig 1

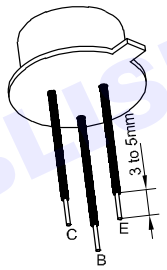

Note: In some power transistors, the metal body itself will be the collector. In such cases mark 'C' on the metal body using a pencil. All transistors will not have shield pin.

5 Repeat steps 1 to 4 for atleast five transistors of different types in the given lot and get your work checked by your instructor.

TASK 2 : **Tasting a transistor function by using ohm meter.**

1 Identify which terminal of the ohmmeter being used is connected to the +ve terminal of the internal battery of the meter. Set the meter range to Rx100W.

Ohmmeters in very low or very high ohms range can produce excessive current/voltage and may damage low power transistors while testing.

2 Take a transistor whose pins are identified and sleeved at Task 1. Depending on whether the chosen transistor is NPN or PNP, clip/hold the +ve or -ve of the meter prod to the base of the transistor as shown in Fig 1a and 1b.

3 Clip the other meter prod to the emitter. Check if the base-emitter junction diode of transistor shows low resistance (few tens of ohms) or very high resistance (few tens of kilo ohms). Record your observation in Table 1.

© NIMI NOT TO BE REPUBLISHED

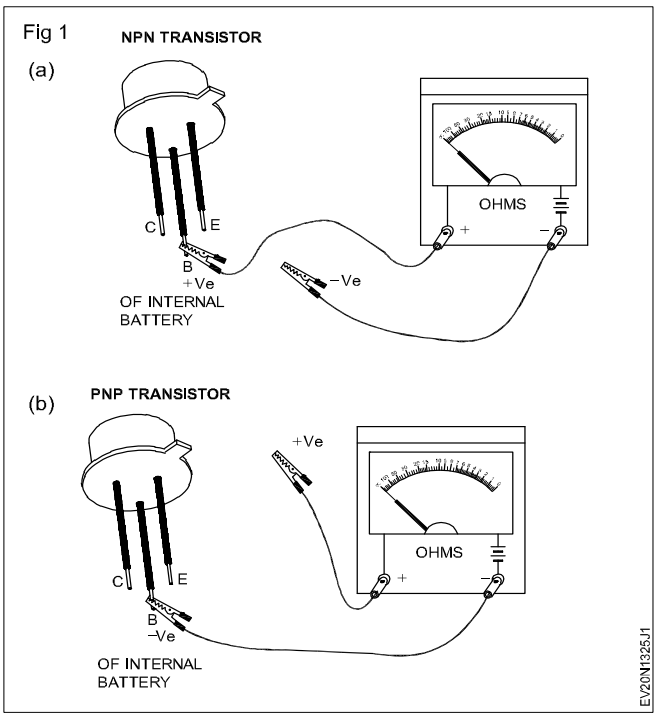

4 Reverse the polarity of the prod connected across the base-emitter and check if the base-emitter junction diode of transistor shows low resistance or very high resistance. Record your observation in Table 1.

5 From the recorded observations in steps 3 and 4, and referring to the table given below, conclude and record, the condition of the base-emitter junction diode of the transistor as GOOD, **open** or **shorted** in Table 1 of O&T sheet.

Note: If the resistance of the junction measured in both directions is high, in addition to the condition of the junction given in table, one other possibility is, your identified base pin may be wrong. You may be measuring resistance across emitter-collector. In case of doubt, recheck the identified pins of the transistor and repeat steps 2, 3 and 4.

6 Repeat the steps 2,3,4 and 5 and check the condition of the base-collector junction diode of the transistor.

7 Measure the resistance across the emitter-collector and record the observation as V-HIGH (> 1MW) or LOW (< 500W).

Table 1

Resistance of P-N junction with meter prods in one direction	Resistance of P-N junction with meter in reversed direction	Condition of P-N junction
Low	Very High	Good
Low	Low	Shorted

© NIMI NOT TO BE REPUBLISHED

Note: In a good transistor the resistance between the emitter and collector will be very high. A low resistance indicates that the transistor is leaky.

8 Clip the meter across the emitter-collector with correct polarity as shown in Fig 2. Touch the base-collector with moist fingers as shown in Fig 2 and check if the resistance shown by the meter decreases indicating that the transistor is turning ON. Record your observation as YES or NO in Table 1 of O&T sheet.

9 From the observations recorded at steps 5,6,7 and 8, give your conclusion on the overall condition of the transistor under test.

10 Repeat steps 1 to 9 for atleast five more transistors of different types.

11 Get your work checked by your instructor.

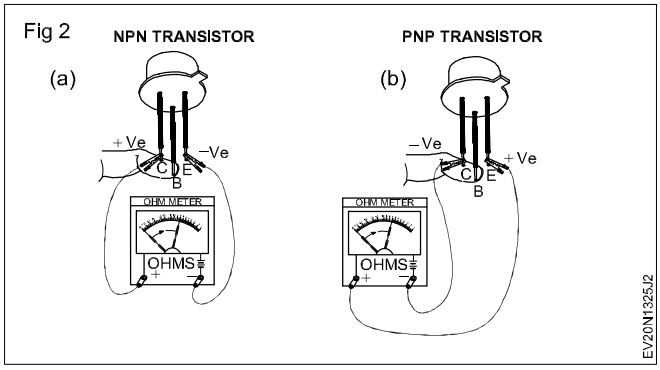

— — — — — —

Identify various power MOSFETs by its number and test by using multimeter

Objectives: At the end of this exercise you shall be able to
- **identify a given MOSFET type by its number and test MOSFET by using multimeter**
- **identify the IGBT by its number and test it by using multimeter**
- **compare the difference between MOSFET and IGBT.**

Requirements

Tools/Equipments/Instruments

- Trainees tool kit - 1 Set
- Digital multimeter with probes - 1 No
- MOSFET Data book - 1 No
- 1GBT Data book - 1 No

Materials

- MOSFET IRF 540 - 1 No.
- IRF Z44 - 1 No.
- IRF 840 - 1 No.
- IGBT assorted ratings - 5 Nos.

PROCEDURE

TASK 1: **Identification of the given MOSFET by its number and testing with a multimeter**

MOSFET is easily destroyed with static electricity, always ground yourself before working with one.

1 Note down the number, specification & type of given MOSFET by using MOSFET data book.

2 Identify which pins of the MOSFET are its source, gate and drain leads. Look up the device's part number in the MOSFET data book to verify its leads layout.

3 For testing the MOSFET using multimeter, hold the MOSFET by the case or the tab but don't touch the metal parts of the test probes with any of the other MOSFET'S terminals until needed. Do not allow a MOSFET to come in contact with your clothes, plastic or plastic products, etc. because of the high static voltages it can generate.

Fig 1

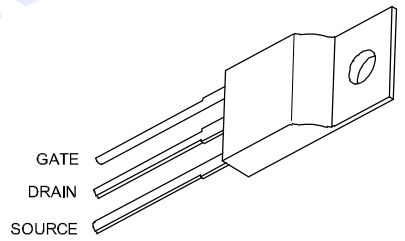

MOSFET

4 First, touch the multimeter positive lead on the MOSFET'S 'Gate' and negative lead on the source.

This testing procedure is for use with a digital multimeter in the diode test-range with a minimum of 3.3 volt over diode-under-test. If your multi-meter battery is less than that it will not do the test. Check your meter for the specification.

Table 1

Sl. No.	MOSFET No.	V_{GD}	V_{DS}	V_{GS}	Condition of MOSFET

5 Now move the positve probe to the 'Drain'. You should get a 'low' reading. The MOSFET'S internal capacitance on the gate has now been charged up by the meter and the device is 'turned-ON'.

6 With the meter positive still connected to the drain, touch a finger between source and gate (and drain if you like, it does not matter at this stage). The gate will be discharged through your finger and the meter reading should go high, indicating a non-conductive device/high resistance condition.

The above test means that, actually testing the cut-off voltage, which is basically the highest voltage put on the gate without making it conduct.

7 If the meter reading is low on both sides of VGS (or) VDS, then MOSFET is short circuted/defective.

8 Get the work checked by the Instructor.

© NIMI NOT TO BE REPUBLISHED

TASK 2: **Identification of IGBTs by their number, pin configuration of type**

1 Note down the number printed on given device.

2 Identify the number in data book and note IGBT type.

3 Record the specification like voltage & current rating of given IGBT in Table 1.

4 Identify the terminals gate, emitter & collector with the help of the data book.

Table 1

Sl.No.	IGBT No.	Specifications							
		VR (Voltage Rating)	CR (Current Rating)	ID (Gate Input Drive)	II (Input Impedence)	OI (Output Impedence)	SS (Switching Speed)	Pin configuration	Application

— — — — — —

TASK 3 : **Testing of IGBT using multimeter**

1 To test IGBT with multimeter use meter in diode checking mode with battery voltage of less than 20 V.

2 To test collector emitter junction remove the conductive foam and short the gate to the emitter.

3 As the multimeter is in diode check mode, the collector to emitter should give a normal diode reading with positive on the collector and negative on the emitter.

4 The multimeter should read open or infinite with collector negative and emitter positive.

5 If IGBT is damaged it may test as shorted in both positive and negative directions, open in both directions, or low resistive in both directions.

6 For gate oxide test keep the meter in resistance mode, where the resistance from gate to collector and gate to emitter should be infinite on a good device.

7 If it is a damaged device it appears shorted or have leakage resistance from gate to collector and/ or emitter.

Note: The input section of IGBT junctions like a MOSFET and the output section of IGBT functions like a bipolar juntion transistor.

8 Get the work checked by the Instructor.

© NIMI NOT TO BE REPUBLISHED

— — — — — —

TASK 4 : **Compare the difference between MOSFET and 1 GBT**

1 Study the MOSFET and 1 GBT data book.

2 Note the difference between MOSFET and 1GBT in following table - 1.

Note:Instructor has to be explain about the difference between MOSFET and 1GBT

Table 1

Sl. No	Parameters	MOSFET	1 GBT
1	Structure		
2	Application		
3	Voltage rating		
4	Current rating		
5	Voltage drop		
6	Switching speed		
7	Gate drive		
8	Capacity		
9	Efficiency		
10	Space covered		
11	Cost		

— — — — — —

© NIMI
NOT TO BE REPUBLISHED

Practice to construct and test the logic gates

Objectives: At the end of this exercise you shall be able to
- **construct the logic gates & verify the truth table.**

Requirements

Tools / Instruments
- Trainee's tool kit - 1 No.

Equipment / Machines
- Battery 12V - 1 No.
- Vehicle - 1 No.

Materials
- Relay 12V - as reqd.
- Lamp 12V, 10W - as reqd.
- Switches - as reqd.
- Resistors - as reqd.
- Transistor NPN 2A - as reqd.
- Wire - as reqd.

PROCEDURE

TASK 1: **Constructing OR gate circuits and verify the truth table**

1 Connect the transistors as shown in Fig 1.

2 Connect the switches in parallel.

3 Connect the bulb at the output.

4 Connect battery.

5 Operate the switches look at the bulb and make truth table 1.

6 Get the work checked by your instructor.

Table 1

A	B	C	ON/OFF condition of bulb
0	0	0	
0	0	1	
0	1	0	
0	1	1	
1	0	0	
1	0	1	
1	1	0	
1	1	1	

Fig 1

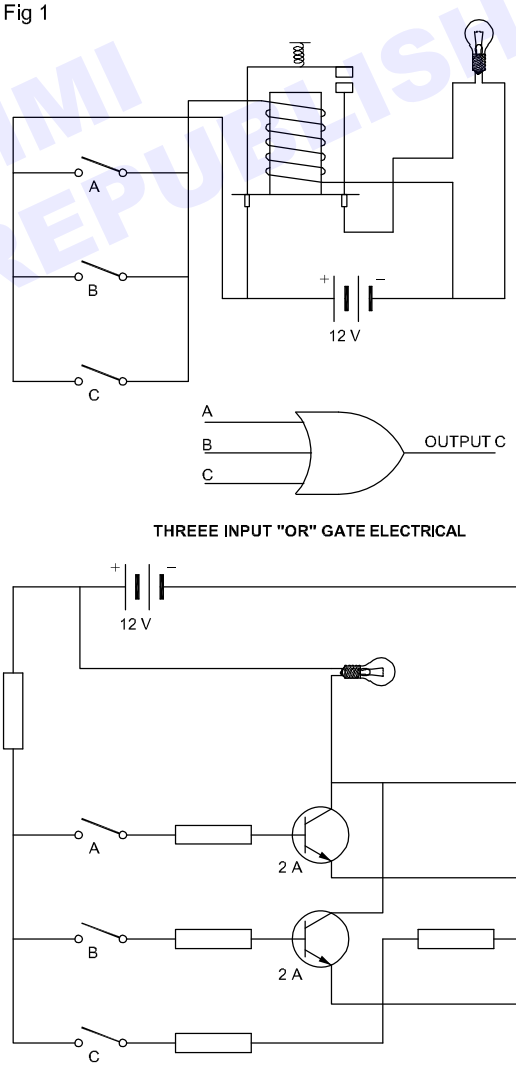

© NIMI NOT TO BE REPUBLISHED

TASK 2: **Constructing an AND gate circuits and verify the truth table**

1 Connect two on-off switch.

2 Connect 21 W/12 V bulb as load.

3 Connect battery 12V.

4 Connect solenoid 12 V (No) with suitable wires as shown in Fig 1.

5 3 NPN 2A transistors connected with suitable resistors.

6 Operate the switches and look at the bulb for its function.

7 Prepare a truth table 1.

8 Get the work checked by your instructor.

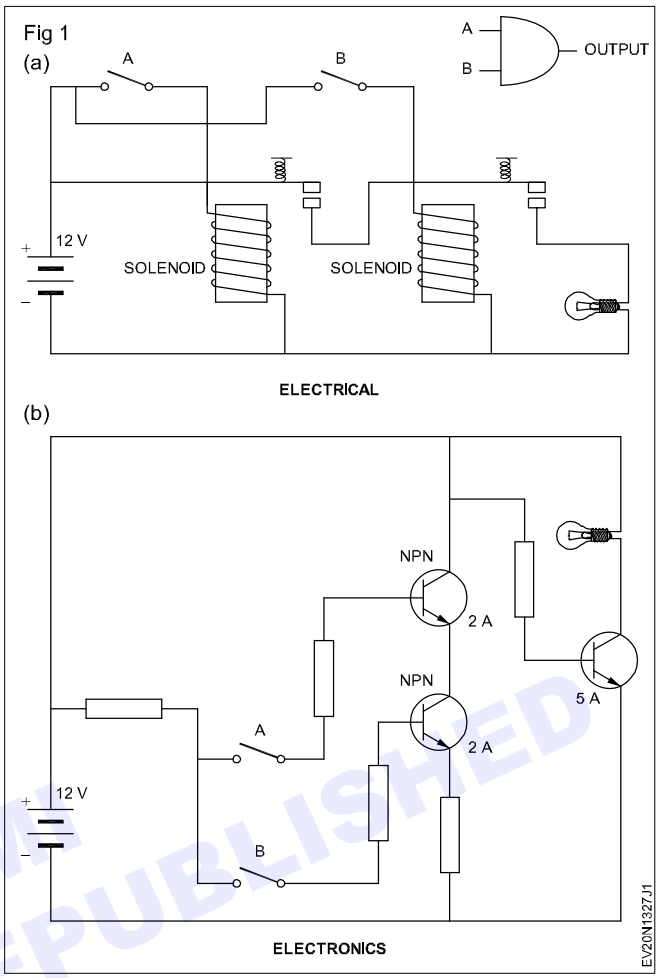

Table 1

A	B	ON/OFF condition of bulb
0	0	
0	1	
1	0	
1	1	

© NIMI NOT TO BE REPUBLISHED

TASK 3: **Constructing NOT gate and verify the truth table**

1 Use 1 mm wires and make the NOT gate electrical circuit (Figs 1 and 2).

12V 21W double contact bulb, 12V relay (B,L,S) with the terminal normally closed tape.

2 Connect the 12V battery.

3 Connect the bulb at the output.

4 Operate the switches and look at the bulb for its function.

5 Get the work checked by your instructor.

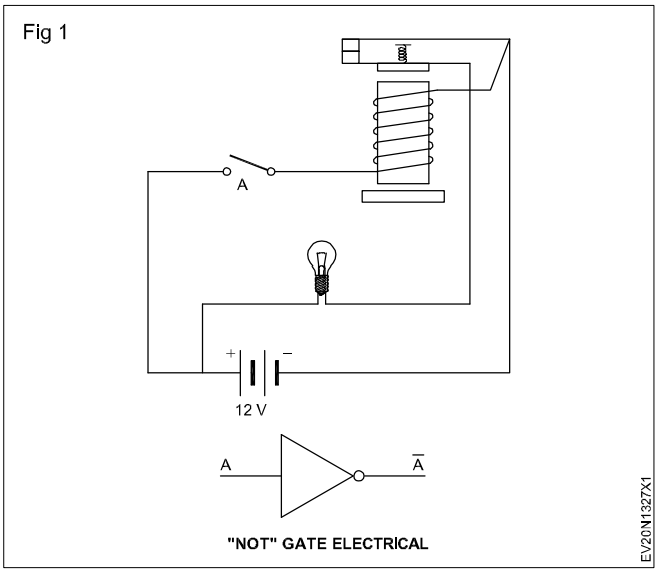

Truth Table

I/P	O/P
0 (OFF)	1 (ON)
1 (ON)	0 (OFF)

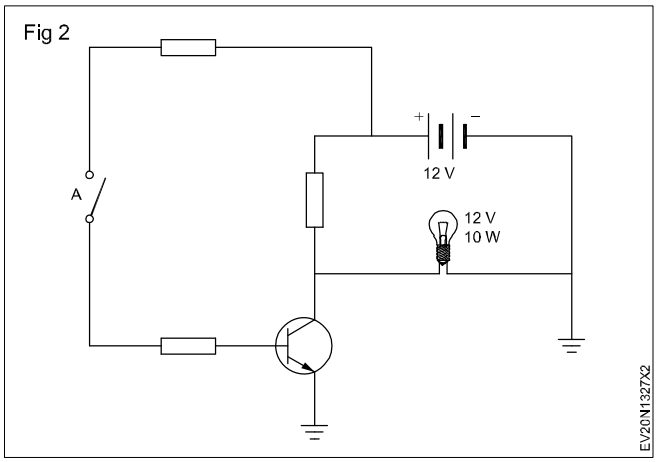

© NIMI
NOT TO BE REPUBLISHED

Practice on construct a electrical circuit with temperature and pressure sensors

Objectives: At the end of this exercise you shall be able to
- **construct a electrical circuit with temperature and pressure sensors**
- **test the temperature and pressure sensors function with micro controller.**

Requirements

Tools/Instruments

- Trainee's tool kit - 1 No.
- Vehicle manual - 1 No.
- Circuit board with sensor kit - 1 No.

Equipments/Machineries

- Electric vehicle - 1 No.
- Computer with net connection - 1 No.
- Micro controller - 1 No.

Materials

- Sensor (pressure & temperature) - as reqd.
- Soft solder - as reqd.
- Wire - as reqd.
- Soldering iron - as reqd.
- Soft solder - as reqd.
- USB Cable - as reqd.
- Drive - as reqd.
- Variable resister - as reqd.
- 9V Battery - as reqd.
- Circuit board - as reqd.
- LED Bulb - as reqd.
- 1 C or chip - as reqd.
- Relay - as reqd.

© NIMI NOT TO BE REPUBLISHED

PROCEDURE

TASK 1: **Constructing a simple electric circuit with pressure and temperasure sensor and test it with micro controller**

- Study the electric vehicle manual for identify the electric circuit.
- Draw the vehicle electric circuit.
- Collect the materials from the store to a construct a circuit.
- Construct the simple vehicle electrical circuit.
- Identify the pressure and temperature sensor.
- Ensure simple wiring circuit properly connected as per vehicle manual.
- Identify the pins or terminals of the temperature and pressure sensor check it with data sheet of manufactures for specific pin configuration.
- Prepare the micro controller and download programs from the internet and upload it with micro controller.
- Reset the data of microcontroller for read the temperature sensor and pressure sensor function.
- Connect the GND (ground) pin of the microcontroller to the ground rail on the bread board.
- Connect the +5V pin of the microcontroller or Arduino board to the positive supply voltage rail on the breadboard.
- Connect the output pin of the temperature sensor to an analog input pin of the microcontroller. Use a jumper wire to make the connection.
- Connect one end of the 10k ohm resistor to the same analog input pin as the temperature sensor. Connect the other end of the resistor to the ground rail on the breadboard.
- Connect the output pin of the pressure sensor to a different analog input pin of the microcontroller by using a jumper wire.
- Connect one end of the 10k ohm resistor to the same analog input pin as the pressure sensor. Connect the other end of the resistor to the ground rail on the breadboard.
- Double-check all the connections to ensure they are secure and properly connected.
- Power up the microcontroller using a USB cable.
- Read reading display on the micro controller's screen, compare the specific value with display reading.

- If found temperature sensor and pressure sensors function is dissatisfied replace the sensor and recheck the function newly placed sensors.

Or

- Trace the electric vehicle temperature sensor's circuit and connection of sensor's terminals.
- Start the vehicle and let allow to run in idle for few minutes.
- Stop the vehicle and disconnect both end terminal connection of temperature sensor.
- Set the multimeter reading and connect the multimeter as shown in Fig 2.
- Read multimeter reading and compare it with manufacturer's specific reading.
- Keep it in same position and observe the reading to be reduced it means sensor is functioning properly.
- Identify the pressure sensor in the vehicle circuit.
- Disconnect the positive terminal of the pressure sensor.
- Set the multimeter in ohm (Ω) reading and connect the multimeter in series connection with pressure sensor or connect the ammeter in series connection for read current flow.
- Switch on the power and read multimeter or ammeter of battery current flow through pressure sensor as it is we can measure the various sensor in different method. (Fig 3).

Note:

The instructor should be given the demo to test the sensor and fault diagnostic method of electric vehicle electric circuit.

Fig 1

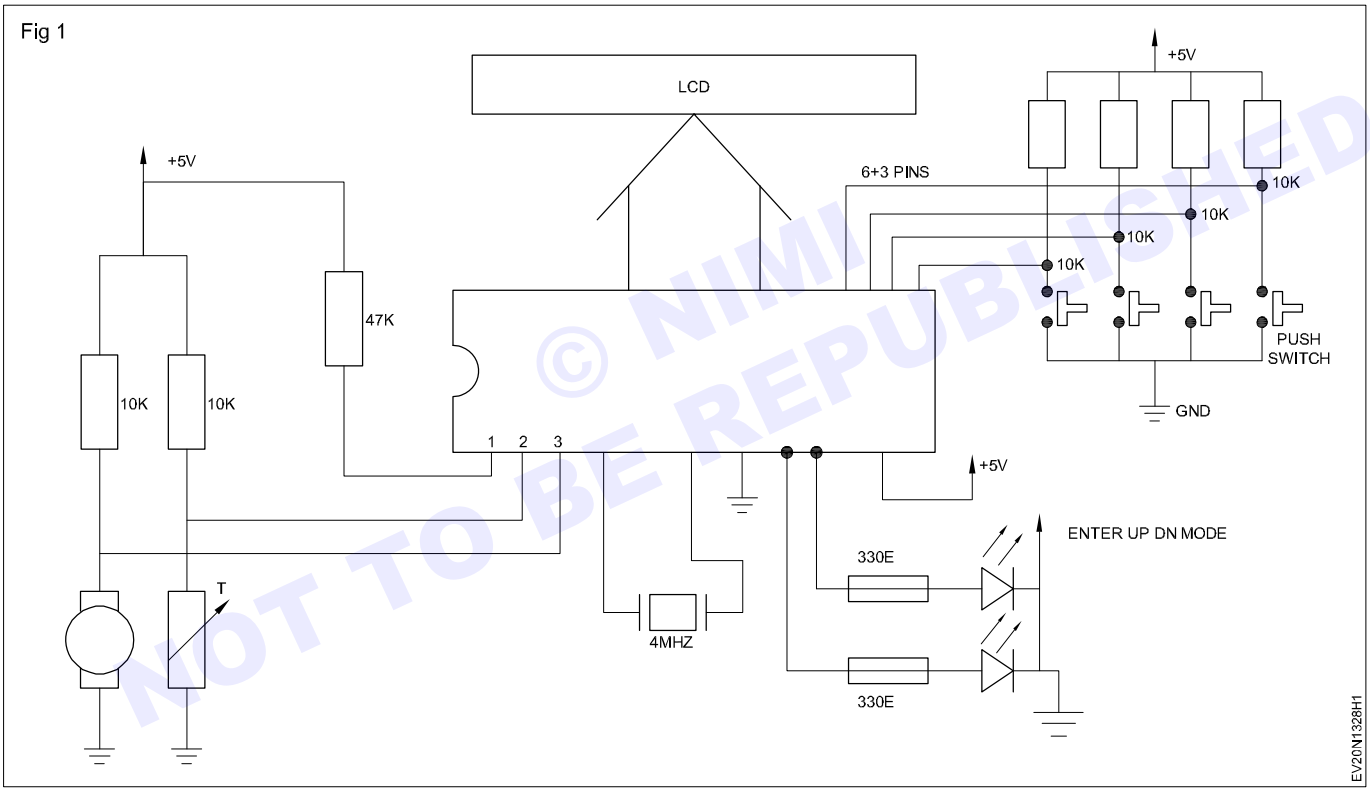

Fig 2

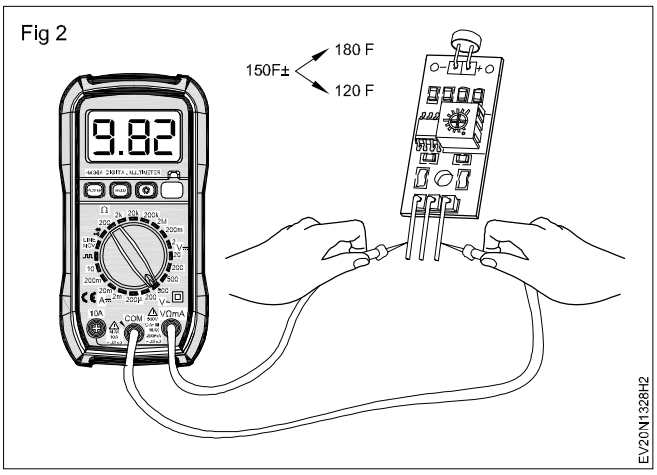

Fig 3

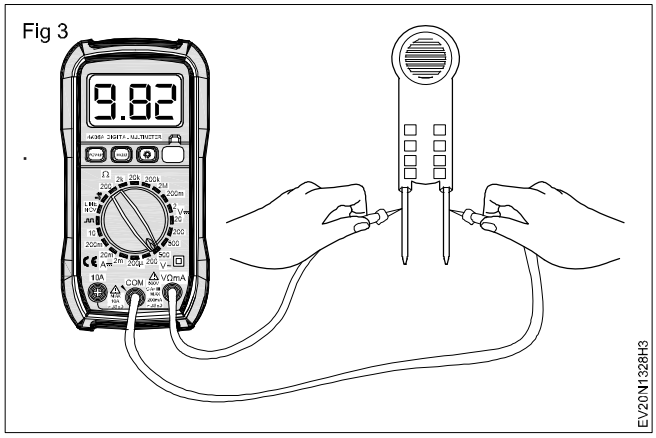

© NIMI NOT TO BE REPUBLISHED

Practice on construct a pulswidth modulation generator

Objectives: At the end of this exercise you shall be able to
- **construct a pulswidth modulation generator**
- **take the pulsewidth generator circuit functionally.**

Requirements

Tools/Instruments

- Trainee's tool kit - 1 No.
- Soldering iron - 1 No.
- 555 timer 1c - 1 No.

Equipments/Machineries

- PWM generator - 1 No.
- 5 Volt DC motor - 1 No.
- LED bulb - 1 No.

Materials

- PWM generator kit - as reqd.
- Cleaning solvent - as reqd.
- Cotton cloth - as reqd.
- Soft solder - as reqd.
- Soap oil - as reqd.
- Resistor - as reqd.
- Capacitor - as reqd.
- 9V Battery - as reqd.
- Breadboard - as reqd.
- Jumper wire - as reqd.

© NIMI NOT TO BE REPUBLISHED

PROCEDURE

TASK 1: **Construct the pulse width modulation (PWM) generator circuit by using basic electronic components**

Note: The instructor has to give guideline to draw and construct a PWM generator circuit and testing method.

- Draw a circuit of PWM generator in your note book.
- Collect the materials for construct the PWM generator circuit.
- Set the breadboard and make sure proper power and ground connections.
- Fix 555 timer IC into the breadboard.
- Connect pin 1 of the 555 timer IC to the ground rail of the breadboard.
- Connect the pin 8 of the 555 timer IC to the power supply rail of the breadboard (5V or 9V).
- Connect pin 6 (threshold) to pin 7 (discharge) of the 555 timer IC.
- Connect the pin 4 (reset) to the power supply rail of the breadboard.
- Connect pin 5 (control Voltage) to the ground rail of the breadboard.
- Connect pin 2 (Trigger) to pin 6 (Threshold) through a resistor.
- Connect pin 3 (Output) to the positive lead of the LED (or other load) through a current-limiting resistor.
- Connect the negative lead of the LED to the ground rail of the breadboard.
- Connect pin 2 (Trigger) of the 555 Timer IC to a potentiometer for adjusting the duty cycle. Connect the other end of the potentiometer to the power supply rail.
- Connect pin 1 (GND) of the 555 Timer IC to a capacitor for smoothing the output signal. Connect the other end of the capacitor to the power supply rail.
- Place a resistor between pins 6 (Threshold) and 7 (Discharge) of the 555 Timer IC.
- Connect a capacitor between pins 2 (Trigger) and 1 (GND) of the 555 timer IC.
- Ensure all the components are properly connected and there no loose or shorted connections.
- Connect 9V battery as shown in Fig 1.
- Power on the circuit and adjust the potentiometer to vary the duty cycle of the PWM signal.
- Observe the LED or load connected to the output pin of the 555 timer IC and note the changes in brightness or intensity as the duty cycle is adjusted
- Noting the potentiometer settings and their corresponding effects on the PWM signal.
- Safely disconnect the circuit and tidy up the components and wiring.

Fig 1

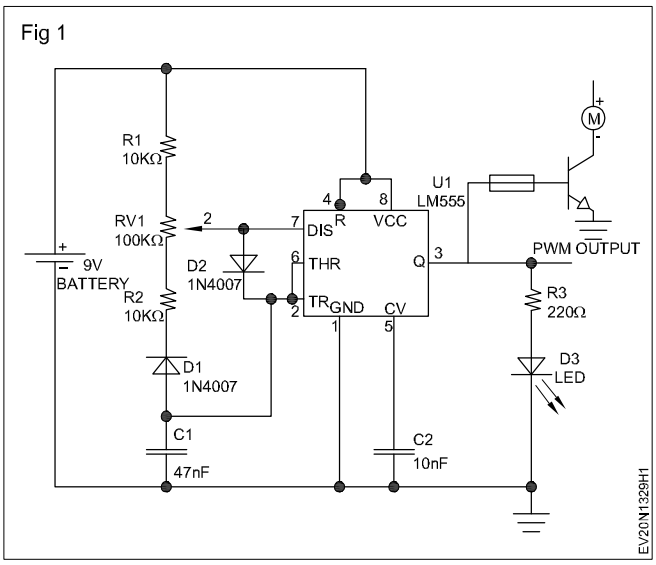

© NIMI
NOT TO BE REPUBLISHED

Practice on identify and test the different types of diodes

Objectives: At the end of this exercise you shall be able to
- **identify the different types of diodes**
- **test the different type of diodes.**

Requirements

Tools / Instruments

- Trainee's tool kit - 1 Set.
- Semi conductor diode data book - 1 No.

Equipments / Machineries

- Multimeter - 1 No.

Materials

- Assorted type of diodes - as reqd.
- Red color wire sleeve - as reqd.
- Patch cords - as reqd.
- Cotton cloth - as reqd.
- Soap oil - as reqd.

PROCEDURE

TASK 1: **Identifying different types of diodes.**

Note: The instructor has to layout the different types of diodes and explain about the function of each diode.

- Identify the plastic package diodes (Fig.1)
- Identify the metal package diodes (Fig.1)
- Identify the glass package diodes (Fig.1)
- Identify the color band of diodes (Fig.1)
- Ask the trainees to write the name of different types of diodes and their use in table - 01

© NIMI NOT TO BE REPUBLISHED

Table - 1

S. No.	Type of diode	Use of diodes	Remarks
1	Low power plastic package diode		
2	Low power glass package diode		
3	Low power metal package diode		
4	Medium power diode		
5	Single diodes		
6	Rectifier diodes		
7	Ceramic diodes		

— — — — — —

Fig 1

LOW POWER - PLASTIC PACKAGE DIODE

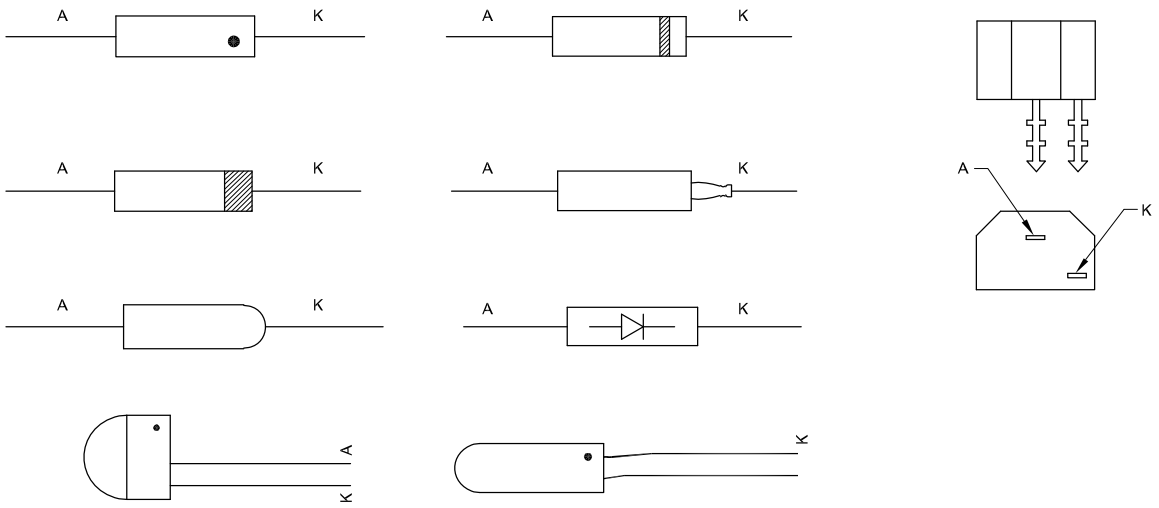

VERY LOW POWER - GLASS PACKAGE DIODE

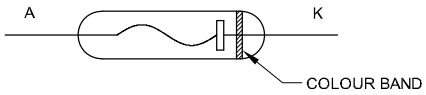

LOW POWER - METAL PACKAGE DIODE

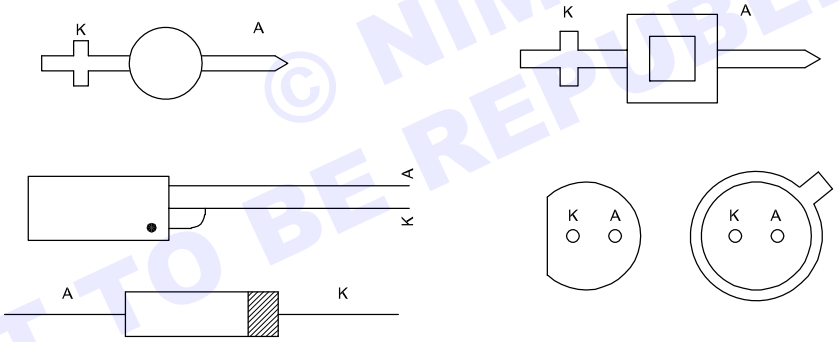

HIGH POWER - METAL PACKAGE DIODE

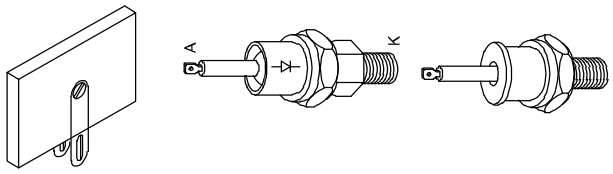

VERY LOW POWER - METAL PACKAGE DIODE

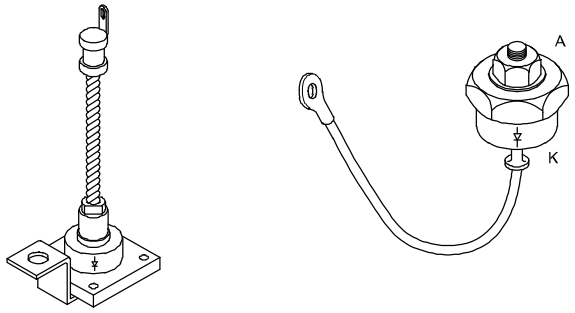

EV20N1430H1

© NIMI NOT TO BE REPUBLISHED

TASK 2: **Measuring voltage and current through a diode in a circuit**

Note: The instructor has to give demo on measuring the voltage and current flow through the diode.

- Draw the simple electrical circuit with diode involvement.
- select and collect the materials to construct the simple circuit .
- Identify the anode and cathode terminals of the diode.

Fig 1

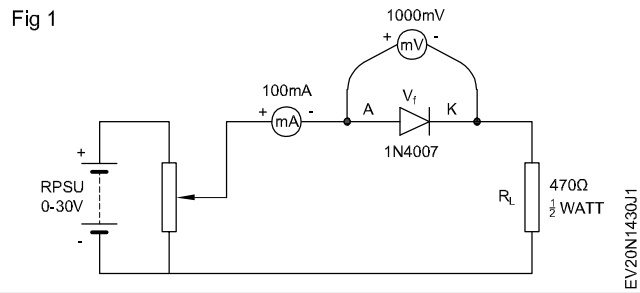

- Construct the circuit as shown in fig.1
- Ensure the circuit is properly developed and components are properly connected with out loose connection.
- Switch ON the Regulated Power Supply and increase the output voltage of the RPSU such that the diode drop V_1 varies from 0 to 1V in steps as given in Table - 1.
- Record the value of current at each step.
- Switch OFF the RSPU ,from the recorded values of V_1 and I_1 Calculate and forward resistance R_1 of the diode.
- From the recorded readings in Table-1 , plot a graph of V_1 and I_1.
- Get the work checked by the instructor.

- Diode type and number:
- Forward Resistance of Diode:
- Reverse -Resistance of Diode:
- Lamp Resistance:

Table 1

Forward voltage drop across Diode V_f in mV	Forward current I_f in mA	Forward Diode Resistance Ω (ohm) value
100mV		
200mV		
300mv		
400mV		
500mV		
600mV		
700mV		
800 mV		
900mV		
1 Volt (1000V)		

© NIMI NOT TO BE REPUBLISHED

Measure the voltage and current by using clamp meter

Objectives: At the end of this exercise you shall be able to
- **measure the light intensity by lux meter**
- **measure AC voltage using clamp meter**
- **measure DC voltage using clamp meter**
- **measure AC current using clamp meter**
- **measure DC current using clamp meter.**

Requirements

Tools/Equipments/Instruments

- Clamp meter with built in multimeter - 1 No
- Clamp meter (Digital) voltage, current measurement - 1 No
- Variac 0-270VAC - 1 No
- Regulated power supply 0-30V/2A - 1 No
- Lux meter - 1 No

Materials/Components

- 12V/10W bulb with holder and wire - 1 Set
- 100W/240V Test lamp with wire - 1 No
- Lead acid battery 12V / 7AH - 1 No
- SPST switch - 1 No

PROCEDURE

TASK 1 : **Identifing the ranges display on Digital Clamp meter**

1 Refer to the user manual of the Digital clamp meter.

2 Switch ON the clamp meter and observe the display, identify each icon representing various parameters measured by the clamp meter.

3 Note down each one of them, with reference to user manual record details in the Table 1.

Table 1

Sl. No	Description of the display/icon	Meaning/ function	Remarks
1			
2			
3			
4			
5			
6			
7			
8			
9			
10			
11			
12			
13			
14			
15			

© NIMI NOT TO BE REPUBLISHED

TASK 2 : **Measuring of AC voltage with Clamp meter**

1 Connect the black test of probe into the COM terminal/ socket.

2 Plug the red probe into the VΩmA socket.

3 Turn the rotary function switch to ACV/ voltage section as shown in Fig 1.

Note: For auto ranging model it automatically display the measured value for other models.

4 Turn on the Clamp meter.

5 Measure the voltage by touching the probes to the AC wall socket of the circuit as shown in Fig 2.

Fig 1

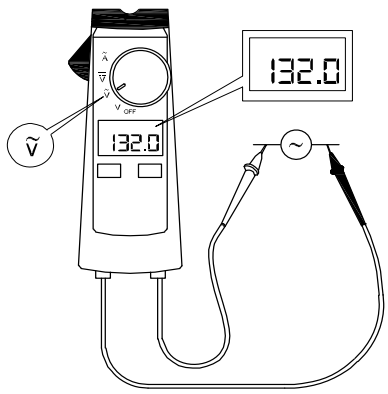

Fig 2

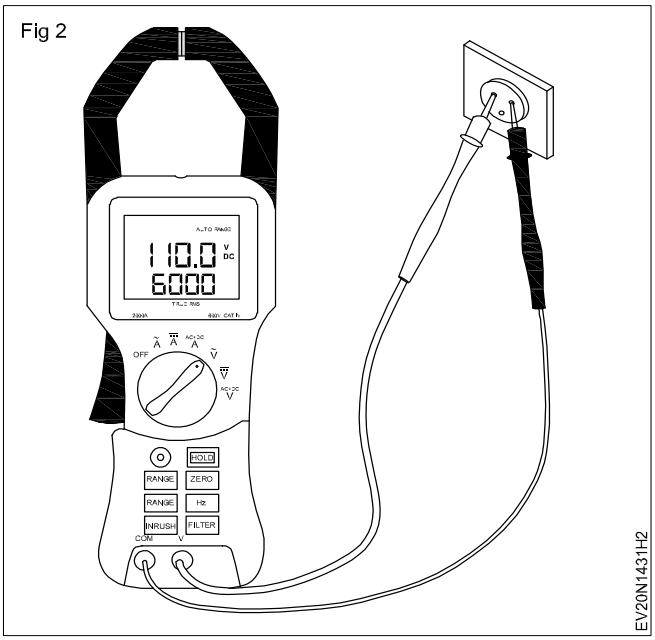

6 View the reading on the display and note down voltage in Table 2.

7 Repeat step 5 for other test point across the layout and note down the voltage in Table 2.

8 Get the work checked by the Instructor.

Table 2

Sl. No	Quantity Measured	Volt AC/DC	Remarks
1	Wall socket		
2	Various points		
3	Lead Acid Battery		
4	Regulated DC power supply		

— — — — — —

TASK 3 : **Measuring a DC voltage by using Clamp meter**

1 Follow the Steps 1 and 2 of Task 2.

2 Turn the rotary function switch of the clamp meter to DC voltage section as shown in Fig 1.

Fig 1

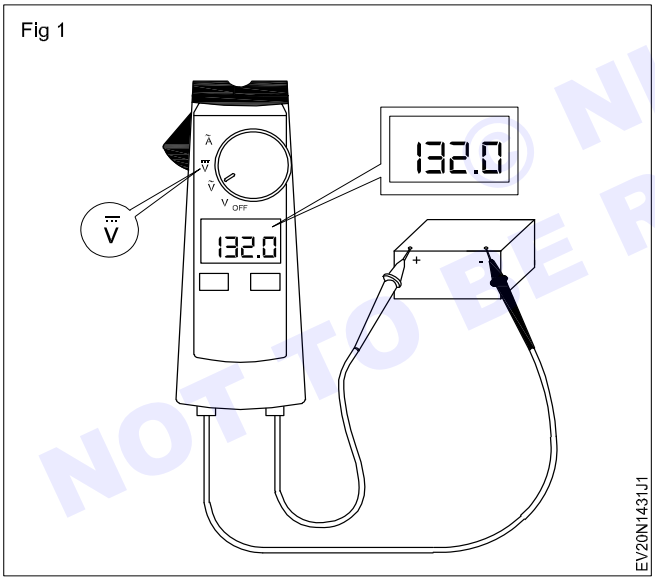

3 Turn on the Clamp meter.

4 Measure the DC voltage by touching the probes across the terminals of battery as shown in Fig 2.

5 Observe the reading on the display and note down in Table 2.

Fig 2

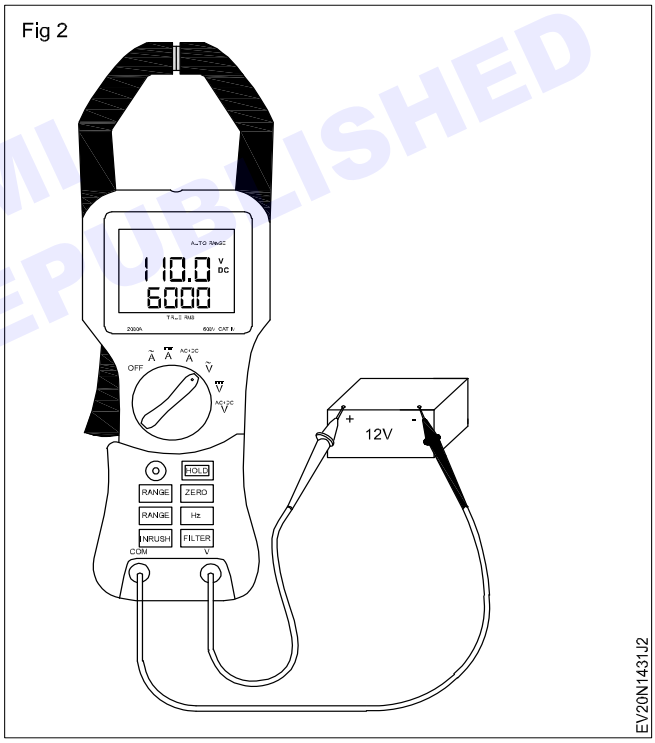

6 Repeat the DC voltage across the regulated power supply and record the observation in Table 2.

7 Get the work checked by the Instructor.

— — — — — —

© NIMI NOT TO BE REPUBLISHED

TASK 4 : **Measuring AC current by using Clamp meter**

1 Turn the rotary function switch to of the clamp meter ACA current section as shown in Fig 1.

Fig 1

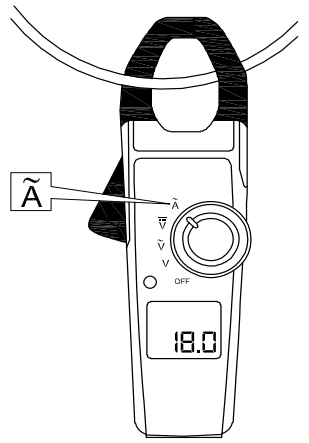

2 Select the circuit current to be measured in AC load and determine the approximately nearest current range on the meter.

The clamp meter will automatically measure the current by the auto ranging model.

3 Identify the Phase conductor cable and separate it from the Neutral and Earth cables.

4 Open the jaws of clamp meter by pressing the jaw keep the phase conductor inside and release as shown in Fig 2.

Fig 2

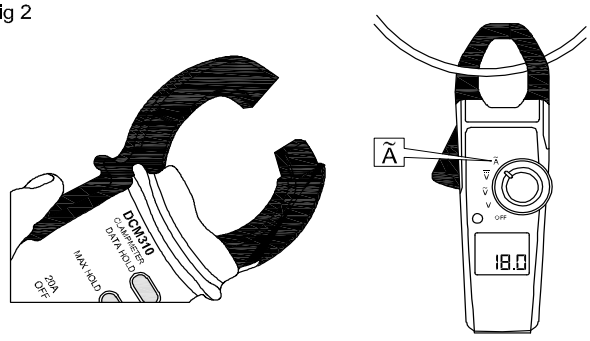

5 Observe the current reading displayed on the meter and record the readings in Table 3.

6 Connect the 100W test lamp to AC mains, and switch ON the circuit.

7 Repeat steps 4 and 5, record readings.

8 Get the work checked by the Instructor.

— — — — — —

TASK 5: **Measuring a DC current by using Clamp meter**

1 Connect the 12V/10W lamp across the 12V lead acid battery as shown in Fig 1.

2 Turn the rotary function switch to DC A Current section as shown in Fig 2.

Fig 1

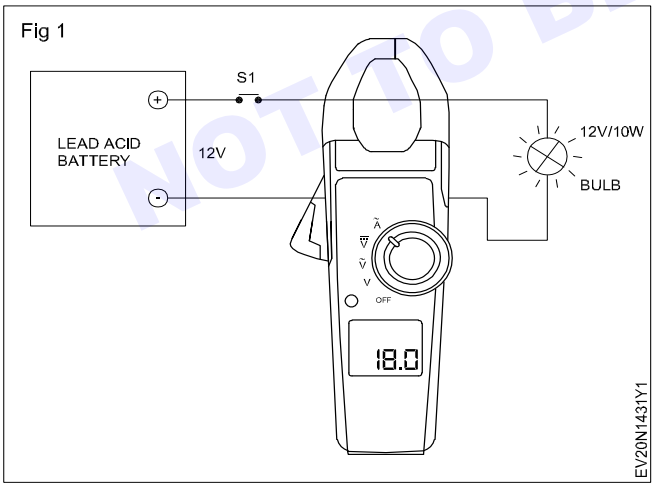

3 Switch ON the 12V DC power supply and ensure the lamp is glowing.

4 Repeat steps 4 and 5 of task 4 above and record the readings in Table 3.

5 Repeat the steps with the lamp connected across the DC power supply with 10V.

6 Switch ON the 10V DC supply measure the DC current and record the readings in Table 3.

Table 3

Sl. No	Current measured circuit/point	Current AC/DC	Remarks
1	AC load circuit	A.AC	
2	Test lamp 100W	A.AC	
3	Battery circuit	A.DC	
4	DC power supply circuit	A.DC	

Fig 2

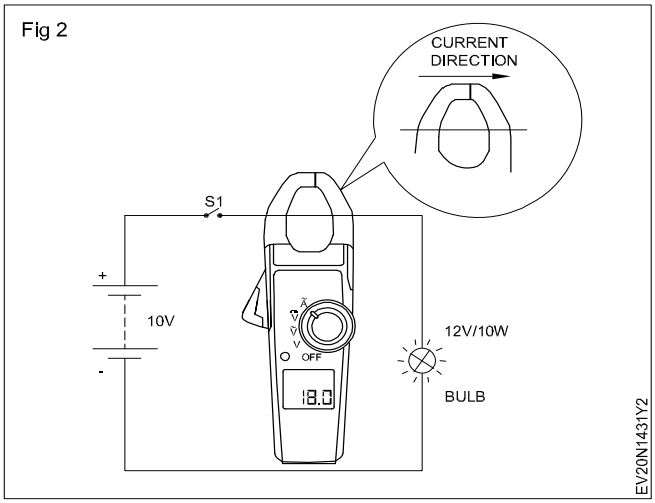

7 Get the work checked by the Instructor.

© NIMI NOT TO BE REPUBLISHED

TASK 6: **Measuring light intensity by lux meter**

Note: The instructor has to give demo on lux meter using method

- Select the lux meter.
- Prepare the lux meter for measure ambient light in the room.
- Turn off any lighting in the room.
- Turn on lux meter to establish to known base line measurement.

Fig 1

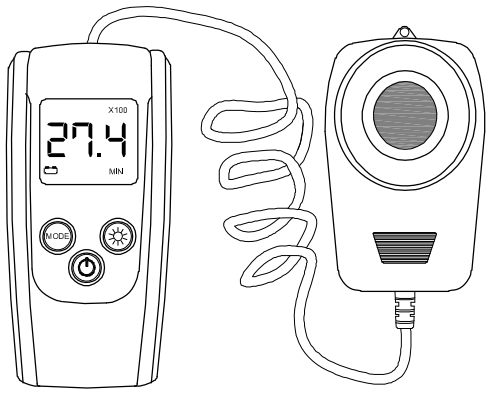

- Position the lux meter sensor at the desired location of the room where you want to measure the illuminance.
- Turn on the lights and take your measurement by using lux meter.

Note: Allow the lighting for few moments to reach full brightness.

- Read and record the lux value displayed on lux meter.
- Now make your differential reading.
- Compare the current reading with baseline measurement reading.
- Identify the difference between before light on and after light on brightness of the room in light intensity.
- Measure the light intensity of the room illuminance in different places.

— — — — — —

© NIMI
NOT TO BE REPUBLISHED

Practice on identify and test the different types of transistors

Objectives: At the end of this exercise you shall be able to
- **identify the different types of transistors**
- **test the different types of transistors.**

Requirements

Tools / Instruments
- Trainee's tool kit - 1 Set.
- Transistor manual - 1 No.
- Multi meter - 1 No.

Equipments / Machineries
- Test bench - 1 No.

Materials
- Assorted transistors - as reqd.
- Cotton cloth - as reqd.
- Soap Oil - as reqd.
- Assorted heat sinks - as reqd.

PROCEDURE

TASK 1: **Identify the different types of transistors**

Note: The instructor has to display the different types of transistors and heat sinks on the table and explain their names and its function.

- Identify the bipolar junction transistor (PNP,NPN).
- Identify the field effect transistor.
- Identify the mosfet transistor.
- Identify JEFT transistor.
- Identify the transistor code number and record them in table - 01.
- Refer the chart -1 semi conductor data book.
- Identify the type of package and all other details as required in Table- 01 and record them.
- Refer to the chart -2 for different types of heat sinks used for transistor, compare , verify, the details of transistors in Table -1 and select the heat sink suitable for the transistor in hand.
- Record the heat sink type in Table -1.
- Some metallic transistor have notch on its surface identify the mark or notch available in the transistor.
- Get the work checked by the instructor.

Table 1

Sl.No	Label No	Transistor Code No	Transistor Package type	Package Diagram with Pin description	Current & Voltage		Power rating	Suitable Heatsink type
					Current rating	Voltage rating		

— — — — — —

© NIMI NOT TO BE REPUBLISHED

CHART 1

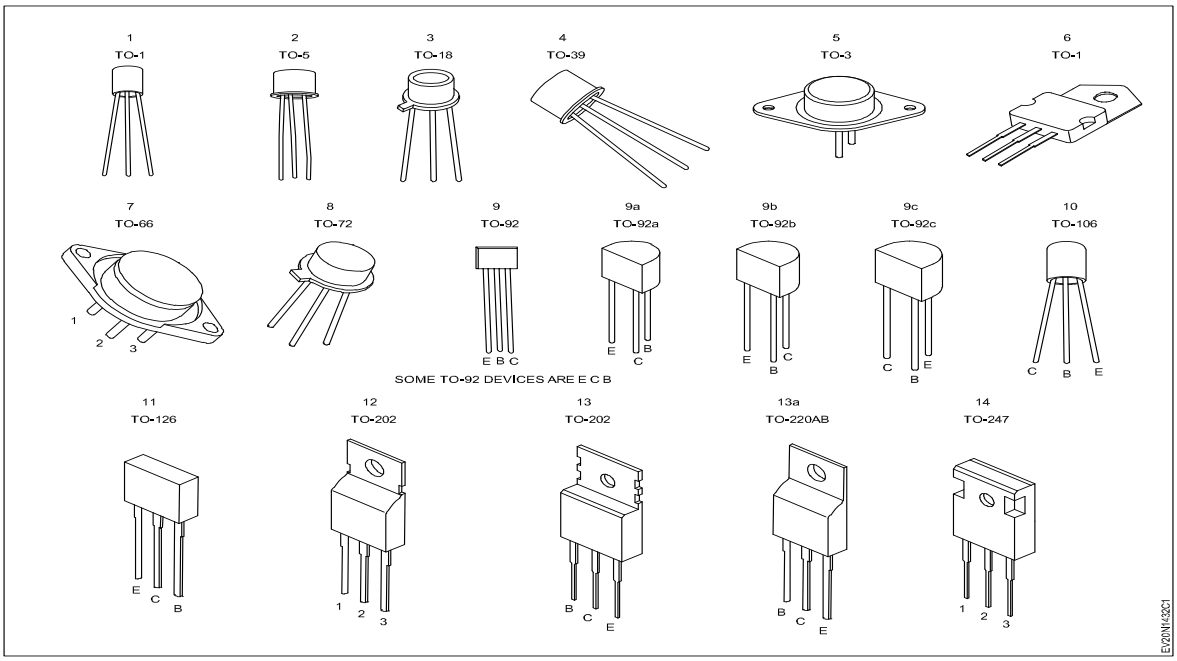

DIFFERENT TRANSISTOR PACKAGES

— — — — — —

CHART 2

Chart showing different types of heatsinks used for transistor packages

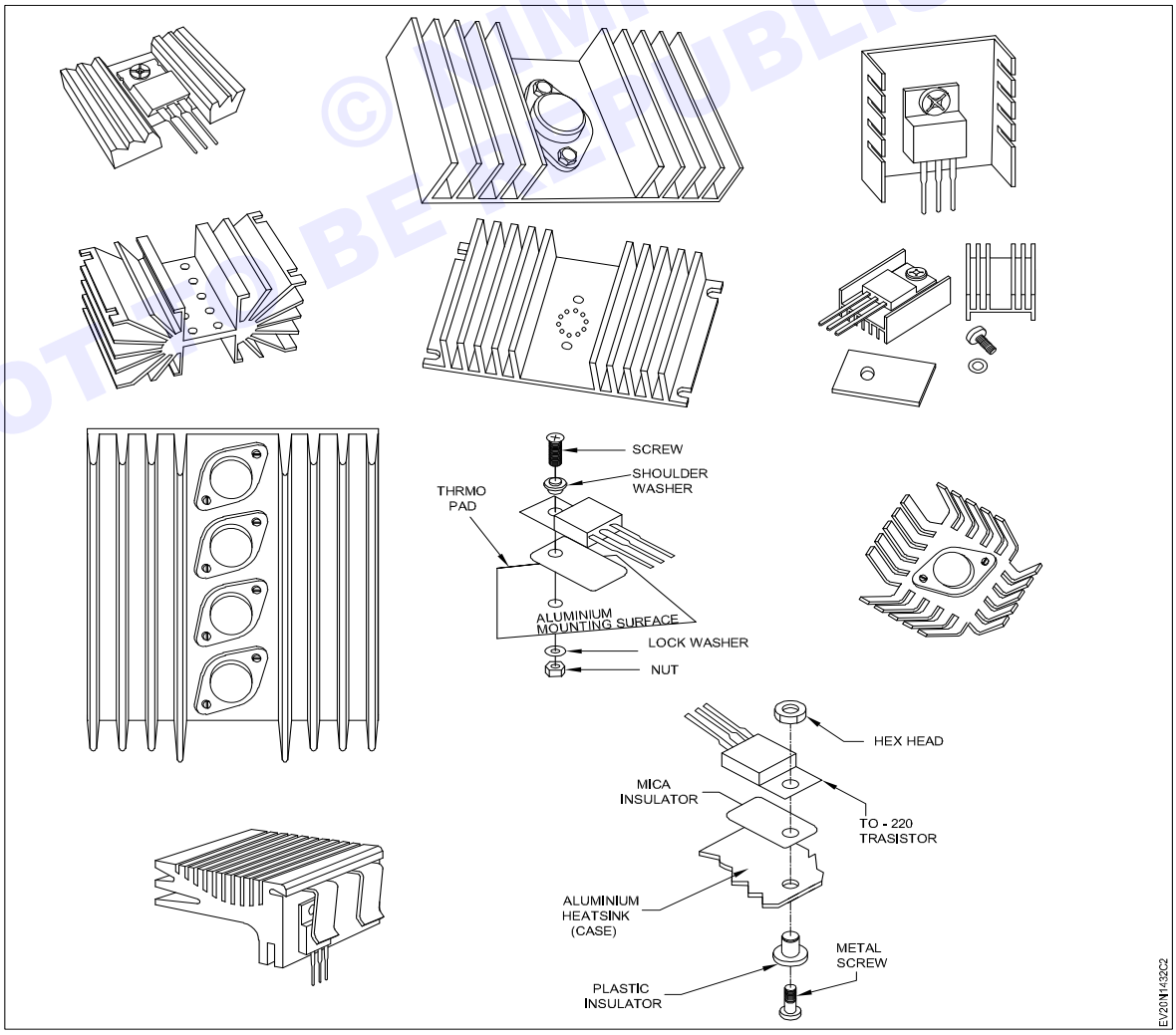

— — — — — —

© NIMI NOT TO BE REPUBLISHED

TASK 2 : **Testing a transistor by using analog multimeter**

Note :

1 **The instructor has to arrange a minimum one number in each type and label the transistors used for this exercise.**

2 **Incase, the Analog type multimeter is not available, skip the Task 1 and proceed with Task 2 of this exercise using Digital multimeter.**

1 Pick one of the labelled transistor from given assorted lot and enter its number in the Table -1.

2 Verify the label number, and other details recorded in the Table 1 of Task -1. Refer the databook, identify the transistor type, pin diagram and record details in Table 1.

In some power transistor, the metal body itself is connected to the collector terminal. All transistors will not have shield pin.

3 Connect crocodile clip probes to the analog multimeter & select ohms range for testing.

In using analog multimeter, select resistance range RX100 Ohm, low range may damage low power transistors.

4 Identify the transistor terminals as Base, Emitter and Collector.

Fig 1

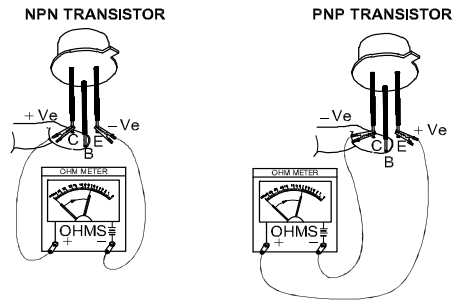

Table 1

Sl.No.	Label No	Code no.of transistor	Package type	Forward/Reverse	Measured resistance between B-E	B-C	E-C	Remarks
1				Forward				
2				Reverse				
3				Forward				
4				Reverse				
5				Forward				
6				Reverse				
7								
8								
9								
10								

© NIMI NOT TO BE REPUBLISHED

Testing the transistor using the analog type Ohm meter is shown in Fig 1 for guidance.

5 Test resistance value between Base & Emitter terminals in forward and reverse direction by connecting probes as shown in Fig 1 and record readings in Table 1.

6 Repeat the above step between Base & collector terminals and record readings.

7 Repeat the step between Emitter & collector and record readings.

8 Repeat steps 4 to 7 for all the remaining labelled transistors.

9 Get the work checked by the Instructor.

— — — — — —

TASK 3: **Testing the condition of transistor by using Digital multimeter (DMM)**

1 Pick any one of the labelled transistor from the given lot, enter its number in Table 1.

2 Verify the details like transistor type, pin configuration etc recorded in the Table 1 of Ex.No.1.9.81/Refer to the data book, identify all the details required.

3 Connect the crocodile clip probe to the DMM and set the selector, switch to the Diode testing position/range.

4 Connect the positive test probe of the DMM to the Base (B) terminal and the negative probe to the Emitter (E) of the transistor as shown in Fig 1.

For a good NPN transistor, the meter should show between 0.45V to 0.9V and for a PNP transistor, the meter should show "OL" (Over Limit) means infinity.

5 Observe the reading displayed on the DMM, record the value in Table 1.

6 Keep the positive probe at Base and connect the negative probe to the collector (C) terminal, observe the reading on the DMM, record it in Table 1.

For a good NPN transistor the meter should show between 0.45 to 0.9V and for a PNP type transistor, the meter should show "OL" (Over Limit) means infinity.

7 Repeat steps 4,5 and 6 with reversed polarities of DMM and record those readings in Table 1.

8 Connect the positive probe to the Emitter terminal and negative probe to the Collector (C) of transistor as shown in Fig 2; Record the observations in Table 1.

9 Repeat step 8 with reversed polarities of DMM.

10 Carry out steps 4 to 9 for all the remaining labelled transistors and record readings in Table 1.

11 Get the work checked by the Instructor.

Fig 1

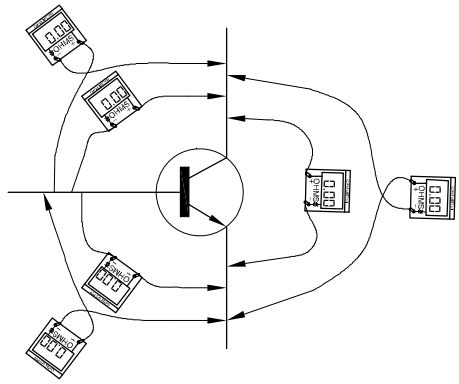

TESTING TRANSISTOR USING DMM

Note:

Compare the resistance values recorded in forward and reverse directions between B-E, B-C and E-C terminals.

Conclude the condition of tested transistor is defective/unserviceable if the resistance value is same on both directions for B-E or B-C junctions, shorted / open junctions show same resistance value in both directions otherwise, the transistor is good/serviceable.

© NIMI NOT TO BE REPUBLISHED

Table 1

Sl.No.	Lable No NPN/PNP	Transistor Code No and type	Meter reading between the terminals				Remarks
			Direction	Base to emitter	Base to collector	Emitter to collector	
1			Forward				
2			Reverse				
3			Forward				
4			Reverse				
5			Forward				
6			Reverse				
7			Forward				
8			Reverse				
9			Forward				
10			Reverse				

— — — — — —

Practice on study of Electric vehicle current adoption status

Objectives: At the end of this exercise you shall be able to
- **study and analyze the current adoption status of BEV, HEV, PHEV and FCEV electric vehicle.**

Requirements

Tools / Instruments
- Trainee's tool kit - 1 Set.
- Electric vehicle manual - 1 No each type.

Equipments / Machineries
- Electric vehicle - 1 No each type.

Materials
- Cotton cloth - as reqd.
- Soap oil - as reqd.
- Paper - as reqd.

PROCEDURE

TASK 1: **Studying and analyzing the current adoption method of BEV, HEV, PHEV and FCEV type of electric vehicles**

Note:The instructor has to place all types of electric vehicle on the shop floor and explain about the current adoption method of each vehicle.

1 Study each type of electric vehicles manual for achieving the knowledge of electric charging point and time taken for battery full charge.

2 Study each type of vehicle's battery manual.

3 Check each type of electric vehicle battery pack, battery capacity, electrolyte containment (Fig 3 & 4) .

Fig 1

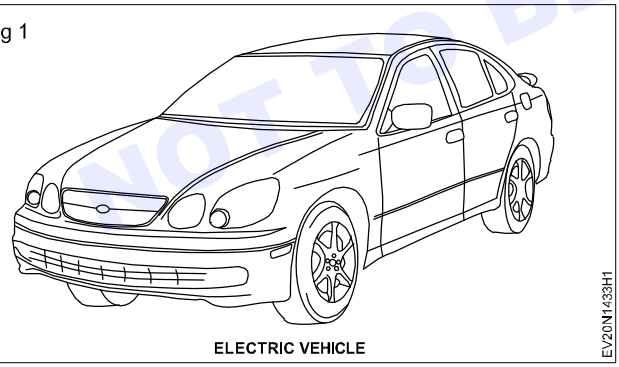

Fig 3

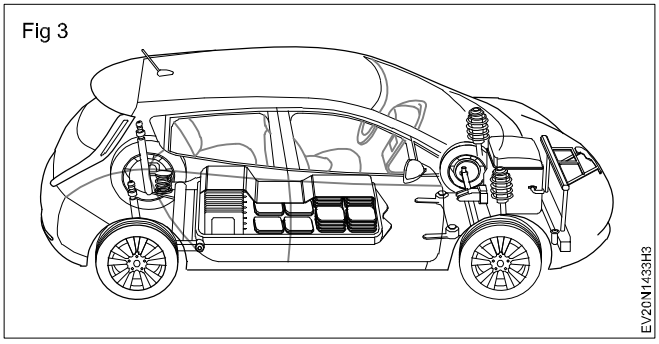

4 Check each type of vehicles driving method.

5 Check each type of EV's battery voltage limits.

6 Check each type of EV's energy efficiency drive cycle (Fig 2).

7 Compare the battery type, battery characteristics of each electric vehicle.

8 Study the maximum state of battery discharge and compare it with each type of EV (Fig 2).

9 Study each EV's charging point location.

10 Study each vehicle's battery full charge taken time (Fig 2)

11 Study the battery maintenance and life of each battery.

12 Study the battery pack connection (series or parallel).

13 Study the battery box design.

14 Study each battery technical specification and compare it.

15 Note down the study report of current adoption in each Electric vehicle in Table - 1 (Fig 1).

Fig 4

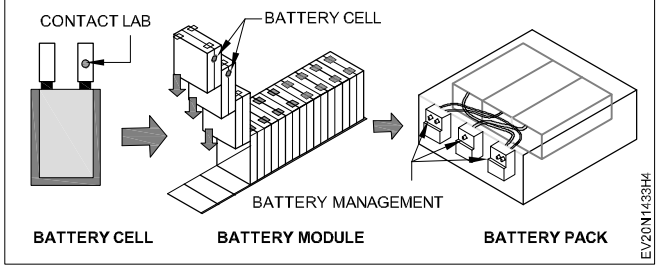

© NIMI NOT TO BE REPUBLISHED

Fig 2

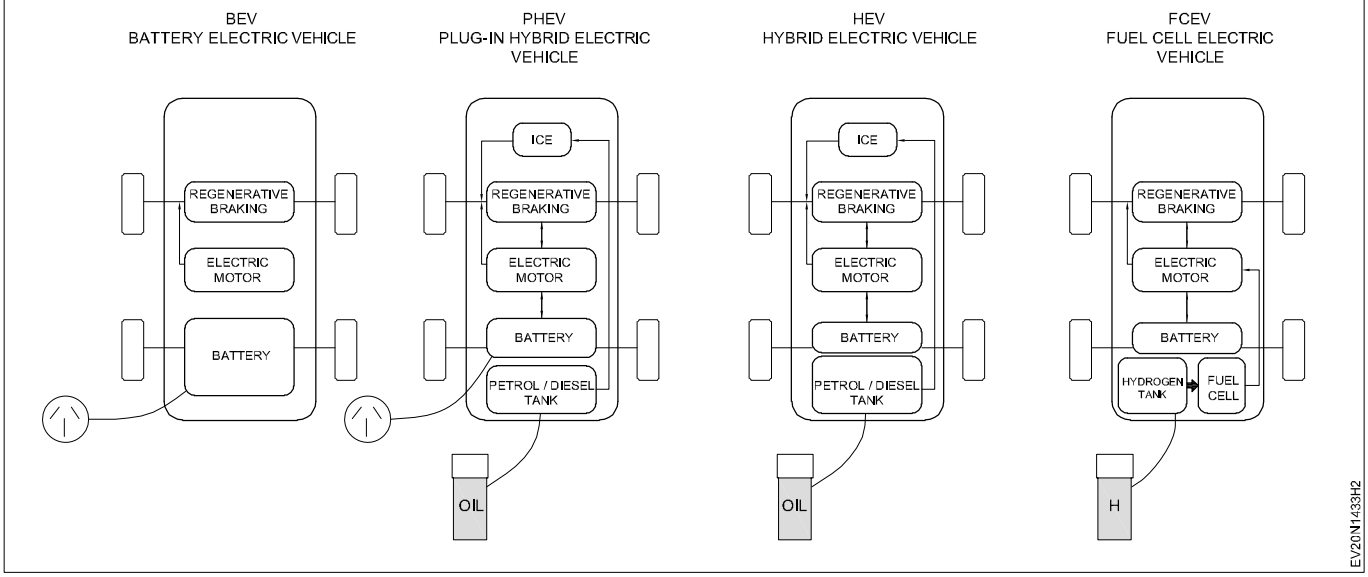

- Table -1 Study report on current adoption status of electric vehicle

S. No.		BEV	HEV	PHEV	FCEV
1	Vehicle manufacturer				
2	Model				
3	Type				
4	Number of batteries in the pack				
5	Arrangement of batteries				
6	Battery pack voltage				
7	Battery module weight				
8	Battery pack weight				
9	Battery capacity to rating Ah 100%				
10	Battery energy to rating with 100%				
11	Battery charge input power				
12	Battery charge current output				
13	Battery cooling medium				
14	Battery maximum continuous power				
15	E.V's battery charging location.				

© NIMI NOT TO BE REPUBLISHED

TASK 2 : **Measure the current adoption status of each battery**

- Clean the battery terminal before check the battery storage current.
- Study the battery manual and note the each battery current storage capacity and battery life.
- Visually check the battery charge indicator adopter in battery by color indication.
- Check the battery for damage and leakages.
- If battery is OK; then check the battery voltage/current with suitable testing instrument.
- Select the multimeter and set battery current and voltage measuring range.
- Connect the multimeter terminal cable with multimeter terminal points.
- Touch the multimeter red and black cable point.
- Check the continuity on the meter display.
- If it is OK then test the batteries one by one by connecting the multimeter.
- Note each battery reading on the paper.
- Compare the reading with the manual specification

  If need recharge the battery, incase battery is not charging replace the battery for the same capacity of current adoption.
- Full charge the battery as direction given by the battery manufacturers

Note:

UL 2580 Batteries are use in electric vehicle

UL 2271 Batteries are use in light electric vehicle

ISO 26262 road vehicles

- Check the following test while test while test the current adoption of batteries
- Battery robustness for vibration
- Thermal shock and cycling
- Mechanical shock and integrity
- Fire resistance
- External short circuit
- Overcharge and over discharge protection
- Over temperature protection
- Battery independence test
- Electro chemical test
- Load bank testing
- Partial discharge testing
- Battery monitoring system

Note:

Use the electronic and digital battery testers for the remaining capacity of battery. Battery capacities is measured in milli amps x hours (MAH)

© NIMI NOT TO BE REPUBLISHED

— — — — — —

Practice on identify and study the performance of electric vehicle.

Objectives: At the end of this exercise you shall be able to
- **identify and study the performance of electric vehicle**
- **identify and study the performance of I.C engine vehicles**
- **compare the Electrical vehicle performance with I.C engine vehicles**

Requirements

Tools/Instruments

- Trainees tool kit - 1 No.
- Electric vehicle manual - 1 No.
- IC Engine Manual - 1 No.

Equipments / Machineries

- Electric Vehicle - 1 No.
- I.C engine vehicle - 1 No.

Materials

- Cotton waste - as reqd.
- Soap oil - as reqd.
- Cleaning solution - as reqd.

PROCEDURE

TASK 1 : **Identifying and studying the performance of electric vehicle**

- Park the electric vehicle on the shop floor (Fig 1)

Fig 1

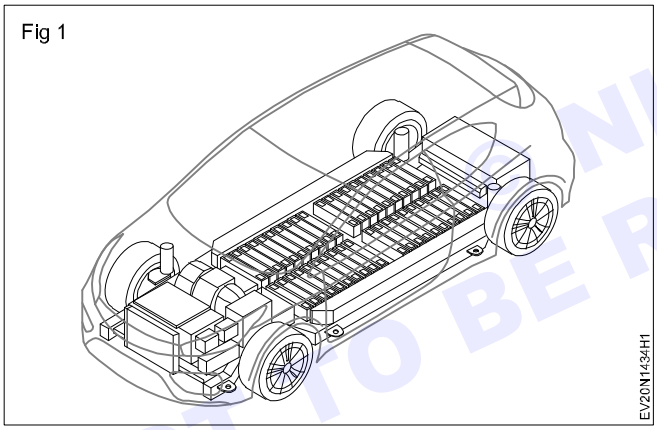

- Clean the vehicle and identify the parts of electric vehicle
- Check the battery charge condition of electric vehicle
- If need, full charge the battery with on board charger
- Check the vehicle thermal system (cooling)
- Check the EV DC/DC converter power electronic controller , electric traction motor, Traction battery pack and transmission system (Fig 2)

Fig 2

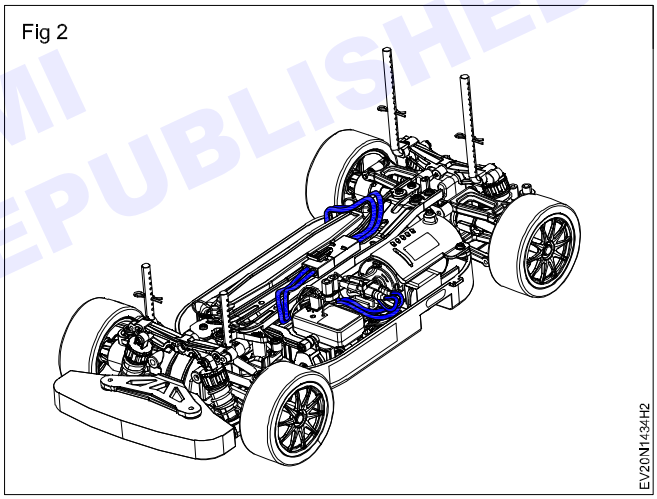

- Read the EV manual before start it
- Start the electric vehicle as direction given by the vehicle manufacturers
- Check the vehicle performance while electric motor transmission drive
- Ensure the there is no any noise from the vehicle
- Move and drive the vehicle on the road ,check the vehicle speed and load carrying capacity.

TASK 2 : **Checking the performance of internal combusion engine**

- Park the vehicle near the electric vehicle
- Clean the vehicle and check all system of vehicle including engine system
- If found any defects on the vehicle, rectify the defects before start the engine.
- Start the engine and check the engine performance (petrol/diesel) including noise emission, fuel consumption, power loss engine starting and stoping engine heat etc.,
- Absorbe the performance of IC engine vehicle's off road drive and on road drive.
- Note the performance of I.C engine vehicles off road drive and on road drive

NIMI NOT TO BE REPUBLISHED

TASK 3 : **Comparison of electric vehicle Vs I.C engine vehicle performance**

- Compare the constructional futures of both vehicle
- Compare the emission control of both vehicle
- Compare the noise of the engine of vehicle
- Compare the cost of the vehicle of both vehicle
- Compare the battery charging method of both vehicle
- Compare the durability of both vehicle
- Compare the on road facilities available for both vehicle
- write down the comparition of electric vehicle with I.C engine vehicles in Table - 01

Table 1

Point of Comparison	**Internal Combustion Engine Vehicle**	**Electric Vehicle**	**Remarks**
Source of power	Runs on non renewable sources	Runs on renewable source	
Prime mover	Internal Combustion Engine (ICE) is the prime mover or power train.	Electric motor is the prime mover in the electric vehicles	
Specific energy	There is high specific energy of fuel	In electric vehicles, low specific energy of battery.	
Power density			
Impact on Environment			
Travelling distance			
Refilling time			
Space & weight fuel tank			
Maintenance & running costs			
Efficiency			
Emission			
Noise production			
Recovery of braking energy			
Time required for maximum torque			
Capital cost			
Power transmission			
Vehicle noise			
Cost of refuling			
Maintanence cost			

© NIMI NOT TO BE REPUBLISHED

Practice to identify the basic components of electric vehicle

Objectives: At the end of this exercise you shall be able to
- **identify the basic components of each type of electric vehicle.**

Requirements

Tools / Instruments

- Trainees tool kit - 1 Set.
- Electric vehicle manual - 1 No.
- I.C Engine vehicle manual - 1 No.

Equipments / Machineries

- Electric vehicle - 1 No.
- Hybrid vehicle - 1 No.

Materials

- Cotton cloth - as reqd.
- Soap oil - as reqd.
- Vechicle cleaning meterials - as reqd.

PROCEDURE

TASK 1 : **Identify the basic key components of each type of electric vehicle (Fig 1)**

- Park the electric vehicle on the shop floor
- Clean the vehicle and open the bonnet and doors of the vehicle
- Study the EV manual for identify the basic components of electric vehicle
- Identify the location of the battery pack in a vehicle
- Identify the EV charge port location on the vehicle
- Identify the DC/DC converter location on the vehicle
- Identify the rear view of a reversing screen display
- Identify the traction motor location and their connections
- Identify the on board charger point on the vehicle
- Identify the location of power electronic controller fixed on the electric vehicle
- Identify the thermal system (cooling system) of electric vehicle
- Identify the vehicle slip ratio indicator
- Identify the auxiliary battery location in electric vehicle
- Identify the display of turning status
- Identify the schematic of fault diagnosis system
- Identify the transmission transfers mechanical power from the electric traction motor to drive the wheels in the electric vehicle
- If the hybrid electric vehicle (HEV) identify the internal combustion engine and its fuel tank and other system related to ICE.
- Identify the control module of HEV and PHEV vehicles
- Identify the battery pack with controller & inverter
- Identify the fuel cell stack incase of fuel cell electric vehicle (FCEV)
- Identify the hydrogen storage Tank in FCEV.

© NIMI NOT TO BE REPUBLISHED

Fig 1

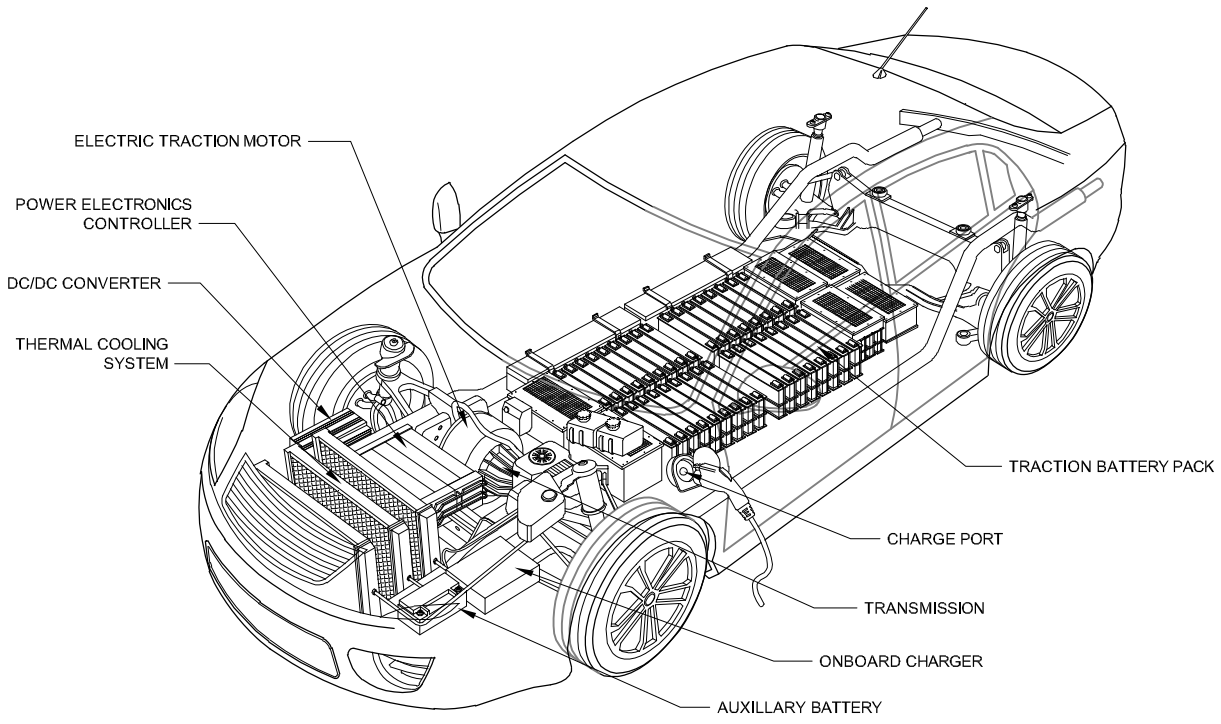

BATTERY ELECTRIC VEHICLE (BEV)

— — — — — —

© NIMI
NOT TO BE REPUBLISHED

Identify the various gauges/instruments on dash board of an electric vehicle

Objectives: At the end of this exercise you shall be able to
- **identify the various gauges and instruments of electric vehicle**
- **identify the various gauges and instruments of IC engine vehicle.**

Requirements

Tools / Instruments
- Trainees tool kit - 1 No.
- Electric vehicle manual EV&ICEV - 1 No.

Equipments / Machineries
- Electric vehicle - 1 No.
- I.C Engine vehicle - 1 No.

Materials
- Cotton waste - as reqd.
- Soap oil - as reqd.
- Paper - as reqd.
- Pencil - as reqd.
- Eraser - as reqd.

PROCEDURE

TASK 1 : **Identifing the various gauges/instruments provided electric vehicle dashboard**

Note: The instructor has to provide the EV and IC Engine vehicle for identify difference between the dash board panel instruments, gauges and warning lights etc.

- Park the vehicle on the shop floor
- Clean the vehicle and open the electric vehicle doors
- Study the particular electric vehicle manual to identify the dash board gauges/instruments
- Study the function of each gauge/ instruments provided on the dashboard of the vehicle
- Inspect the electric vehicle dash board gauges/ instruments
- Find out the type of gauges (Anlog type, digital type, combined type) (Fig 1)

Fig 1

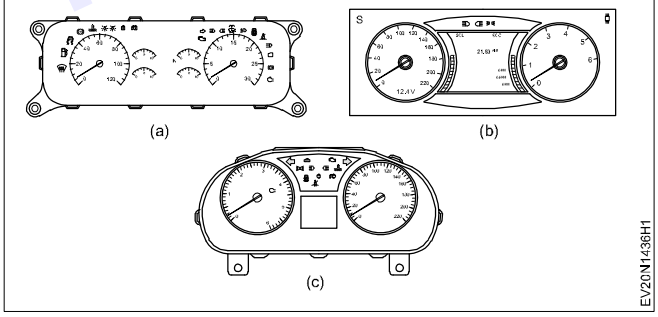

- Identify the ammeter
- Identify the brake circuit pressure indicator
- Identify the temperature scale outside of vehicle information display.
- Identify the seat belt warning indicator.
- Identify the temperature scale inside of the E.V
- Identify the speed dial indicator
- Identify the fuel gauge if hybrid electric vehicle
- Identify the time display (Fig 2)

Fig 2

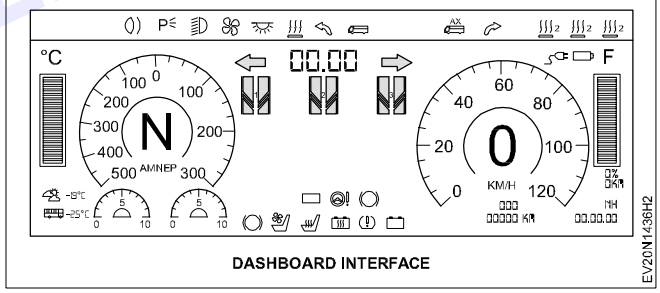

DASHBOARD INTERFACE

- Identify the battery current storage indicator
- Identify the logo while moving the vehicle
- Identify the display is reserved for status lights (Fig 3)

Fig 3

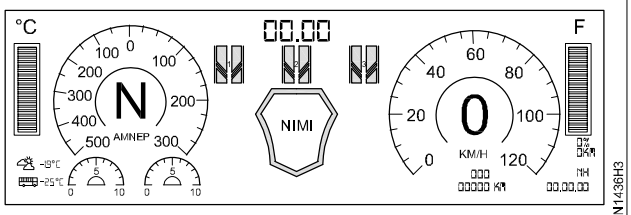

DASHBOARD INTERFACE WITHOUT ERROR

© NIMI NOT TO BE REPUBLISHED

TASK 2 : **Identify the various gauges/Instruments provided in internal combustion**

- Select the any one type of I.C engine vehicle
- Park the vehicle on shop floor
- Clean the vehicle and open the vehicle doors
- Identify the types of gauges/instruments/indicators provided on the dash board
- Identify the speedo meter and RPM gauge (Fig 1)
- Identify the fuel gauge(Fig 1)
- Identify Ampere meter/indicator (Fig 1)
- Identify the temperature gauge
- Identify parking brake indicator (Fig 1)
- Identify engine warning indicator (Fig 1)
- Identify seat belt warning indicator (Fig)
- Identify the glow plug warning light (Fig 2)
- Identify the side turn warning indicator (Fig 1)
- Identify the traction control indicator (Fig 2)
- Identify the stability control indicator (Fig 2)
- Identify the center diffential lock indicator (Fig 2)
- Identify the proximity sensor indicator (Fig 2)
- Identify the brake indicator (ABS)(Fig 2)
- Identify the head light and parking light indicator (Fig 2)
- Identify the battery charge indicator (Fig 2)
- Air condition car inside temperature indicator (Fig 2)

Fig 1

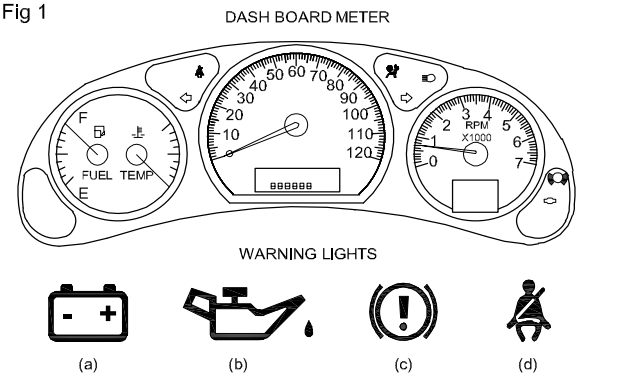

Fig 2

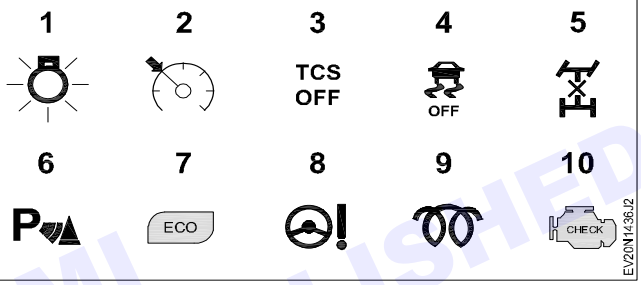

© NIMI NOT TO BE REPUBLISHED

— — — — — —

TASK 3 : **Write down differences in instruments panel gauges and lights of EV and IC Engine vehicle.**

Sl.No.	Gauges/Instruments provided in Electric Vehicle dash board	Gauge/Instruments provided with IC engine vehicle dash board
1	Door open warning	Door open warning
2	No heater warning light	Glow plug warning light
3	No oil level indicator	Oil level indicator
4	No fuel gauge	Fuel gauge on dash board
5	Battery charge indicator	No battery charge indicator
6	No temperatures gauge	Temperature gauge
7	No oil level indicator	Oil indicator
8	Speed range selector	No speed range selector
9		
11		
12		
13		

14		
15		
16		
17		
18		
19		

Note: The instructor has to guide the trainees to study the manual and identify the components provided in a each typed of vehicle

— — — — — —

© NIMI
NOT TO BE REPUBLISHED

Practice to electric vehicle motor power calculation

Objectives: At the end of this exercise you shall be able to
- **calculate the basic motor power consumption.**

Requirements

Tools/Instruments

- Trainees tool kit - 1 No.

Equipments / Machineries

- Electric Vehicle - 1 No.
- Work bench - 1 No.

Materials

- Cotton waste - as reqd.
- Soap oil - as reqd.
- Energy paper - as reqd.
- Carbon brush - as reqd.

PROCEDURE

Task 1 : **Electric vehicle traction motor power calculation method**

- Select the electric vehicle.
- Park the vehicle on the shop floor (Fig 1)
- Study the electrical vehicle construction and their motor power drive
- Study the electrical vehicle power flow methods
- Identify and check the components like charging module, converters, controllers, batteries, electric motor and power flow from battery to (wheel drive) output power to wheel.
- Disconnect the battery terminal wire connection
- Dismount the EV motor (Connection) power transmission to wheel
- Note the power rating of electric vehicle dynamics. The force required for driving a vehicle is calculated by below formula Watt = voltage x time current'

  Force total = rolling force + grading force + aero dynamic force
- Remove the electric motor from the vehicle (Fig 1)
- Identify the type of motor (DC series motor, 3 phase induction motor, permanent

© NIMI NOT TO BE REPUBLISHED

Fig 1

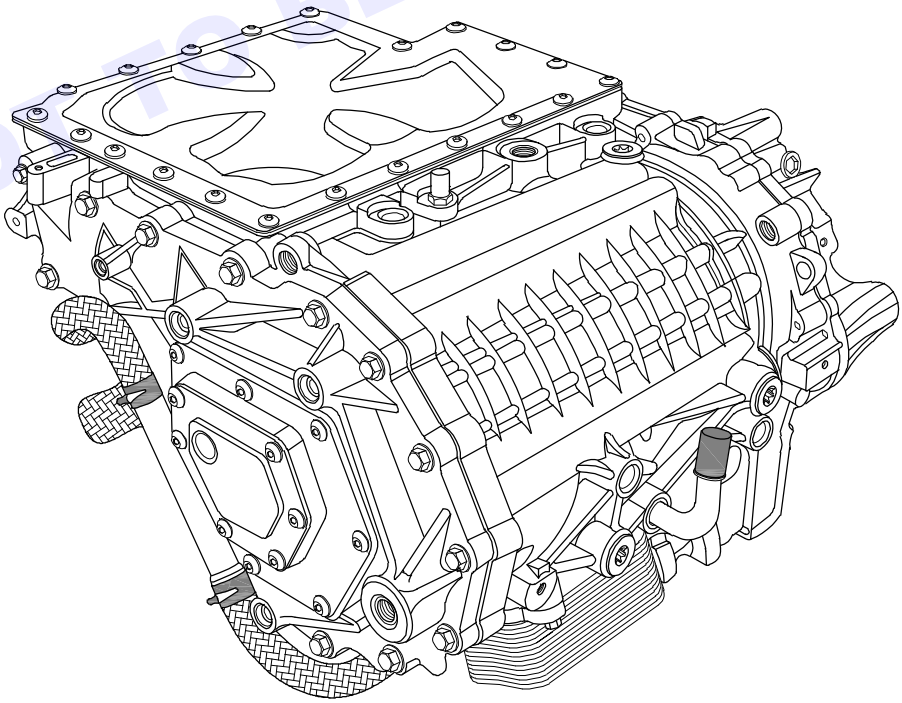

EV20N1437H1

- Magnet motor or brush less DC motor

> **Note:**
>
> **Most of the electric vehicle use the DC brushless motor is selected as the traction motor for an electric car of load 450 kg A 48 v, 3 KW BLDC motor of 24 slot, 8 pole designed is battery is prepared.**

- Place the motor on the work bench
- Check the motor slot and poles (Fig 2)

Fig 2

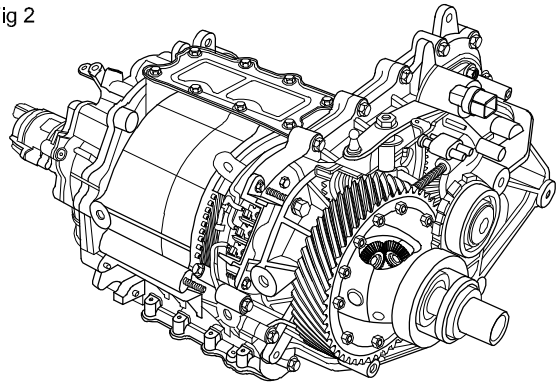

- Connect the battery power to motor and drive the motor.
- Check the output power verses speed
- Note the power losses of motor designed like.

S.NO	Parameter	Values
1	Input power	4.2 KW
2	Output power	3.3 KW
3	Maximum output power	4.8 KW
4	Total loss	1.21

If you use the motor in an electric car of 450 kg is to be achieved as above table. If the value is less than spacied value you repair or replace it.

- If check the motor in no load speed and rated speed of motor should be as follows

S.NO	Parameter	Values
1	No load speed	4057 RPM
2	Rated speed	2950 RPM

The above values of torque parameter achieved a sufficient rated torque of motor

- Check the cogging torque of the motor, which is needed characteristics of a motor, if motor is not taking specified load, repair/replace the motor.
- Check the motor outer diameter, length and total weight before use in EV.
- Check the rated motor parameter like as rated out put power,-5 KW rated voltage, -72 V rated speed – 2950 RPM rated torque -9.710 N.M, simulator output of 3.KW brushless D.C motor designed based on the rating calculation done as above method.

> **Note:**
>
> **Follow the formula to calculate power**
>
> **Power = Energy x time in second**
>
> **W = V x A (Watt = voltage X current)**
>
> **DC motor torque calculation = Torque = Force x radius**
>
> **Electric motor size - motor power car weight = motor weight**

- If you found correct value of the motor as specified by the motor manufacturers for a particular type of car module .you can fit on the car and connect the wire and mechanical connections
- Start the vehicle and drive the vehicle for load test on the road.

> **Note: You can test motor in vehicle or test bench.**

— — — — — —

© NIMI NOT TO BE REPUBLISHED

Practice on Electric vehicle's traction motor selection

Objectives: At the end of this exercise you shall be able to
- **select the electric vehicle's electric motor size**
- **select the particular characteristics' of electric motor for a vehicle.**

Requirements

Tools / Instruments
- Trainee's tool kit - 1 No.
- Electric vehicle manual - 1 No.

Equipments / Machineries
- Electric vehicle - 1 No

Materials
- Cotton cloth - as reqd.
- Soap oil - as reqd.
- Electric motor - as reqd.
- wire - as reqd.

PROCEDURE

TASK 1: **Selection and sizing the traction motor of a electric vehicle.**

Note: The instructor has to be explain the important features of size and characters of EV traction motor.

- Find the types of motor required for electric vehicles (DC or AC motor).
- Select the electric motor any one of the following.
- Brushless direct current motor(BLDCM).(Fig 1)
- Direct current series motor(DCSM).
- Induction motor (IM).
- Permanent magnet synchronous motor (PMSM).(Fig 2)
- Switched reluctance motor(SRM).
- Select the suitable weight of the traction motor.
- The electric motor should be minimum in order to increase the pay load of the vehicle.
- Select the proper size of the motor depends on the type of insulation used.
- Select the following desirable characteristics of traction motors.
- Suitable speed - torque characteristics.
- High over load capacity.
- Motor operate in parallel.
- Robust construction.
- Withstand voltage fluctuations.
- Less weight of traction motor.
- Size in small dimension.
- Simple motor speed control.
- Self relieving property.
- With stand temporary interruption of supply.
- Should have capable of regenerate braking power.
- High starting torque.
- Can withstand high temperature.
- Good commutation.
- Study any one of electric vehicle in your trade and note down the characteristics of the traction motor fitted with E.V in Table - 1.

© NIMI NOT TO BE REPUBLISHED

Fig 1

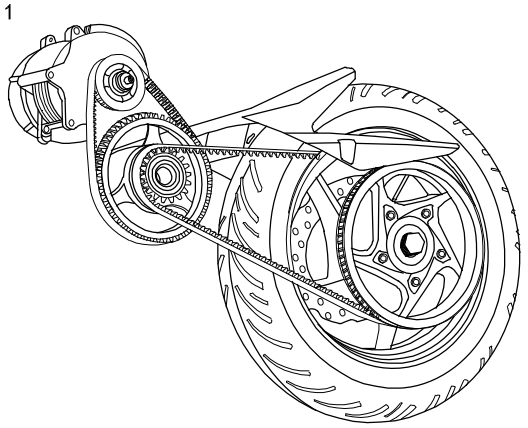

EV20N1438H1

Fig 2

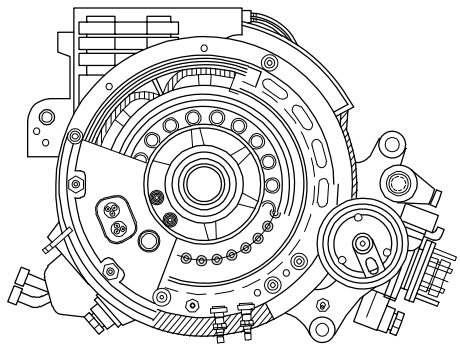

EV20N1438H2

Table - 1

S. No.	Quality of traction motor	characteristics of traction motor	Remarks.
1	Motor speed control		
2	Motor size		
3	Starting Torque		
4	High temperature		
5	Over load capacity		
6	Motor construction		
7	Motor maximum speed		
8	Self relieving property		
9	Type of motor		
10	Method b of starting		
11	Winding of the motor.		

© NIMI NOT TO BE REPUBLISHED

— — — — — —

Practice on study and hands of electric vehicle transmission

Objectives: At the end of this exercise you shall be able to
- **study and operate the electric vehicle transmission.**

Requirements

Tools / Instruments
- Trainee's tool kit - 1 No.
- Electric vehicle manual - 1 No.

Equipments / Machineries
- Electric vehicle - 1 No.
- Electric vehicle transmission cut model - 1 No.

Materials
- Cotton cloth - as reqd.
- Soap oil - as reqd.

PROCEDURE

TASK 1: **Studying and hands of electric vehicle transmission**

- Park the electric vehicle on the shop floor (Fig 1) and apply hand brakes.
- Study the vehicle instruction manual to achieve the knowledge of electric vehicle transmission parts and their function.
- Identify the electric vehicle transmission components.
- Identify the electric vehicle energy storage unit and study the voltage current, temperature and charging time taken etc.
- Identify the power controller unit and study the flow of electrical energy delivered by the traction battery.
- Identify E.V propulsion system and study the electric traction motor.
- Identify the electric motor which is propulsion the vehicle.
- Study the transmitter transfers mechanical power from electric traction motor to drive wheels.
- Identify the thermal system of the vehicle operating temperature range of the battery, electric motor, power electronics and other components.
- Write the E.V's transmission and their functions in Table -1.

© NIMI NOT TO BE REPUBLISHED

Table - 1

S. No.	Name of components	Function of E.V components	Remarks
1	Battery	Power storage	
2	Traction motor	Power convertion from electrical energy to mechanical energy	
3	Auxiliary Battery		
4	Drive belt		
5	Controller		
6	Battery charger		
7	Traction battery pack		
8	Thermal system		
9	Differential		
10	Wheel		
11	Invertor		
12	Convetor		
13	Thermal cooling system		

Fig 1

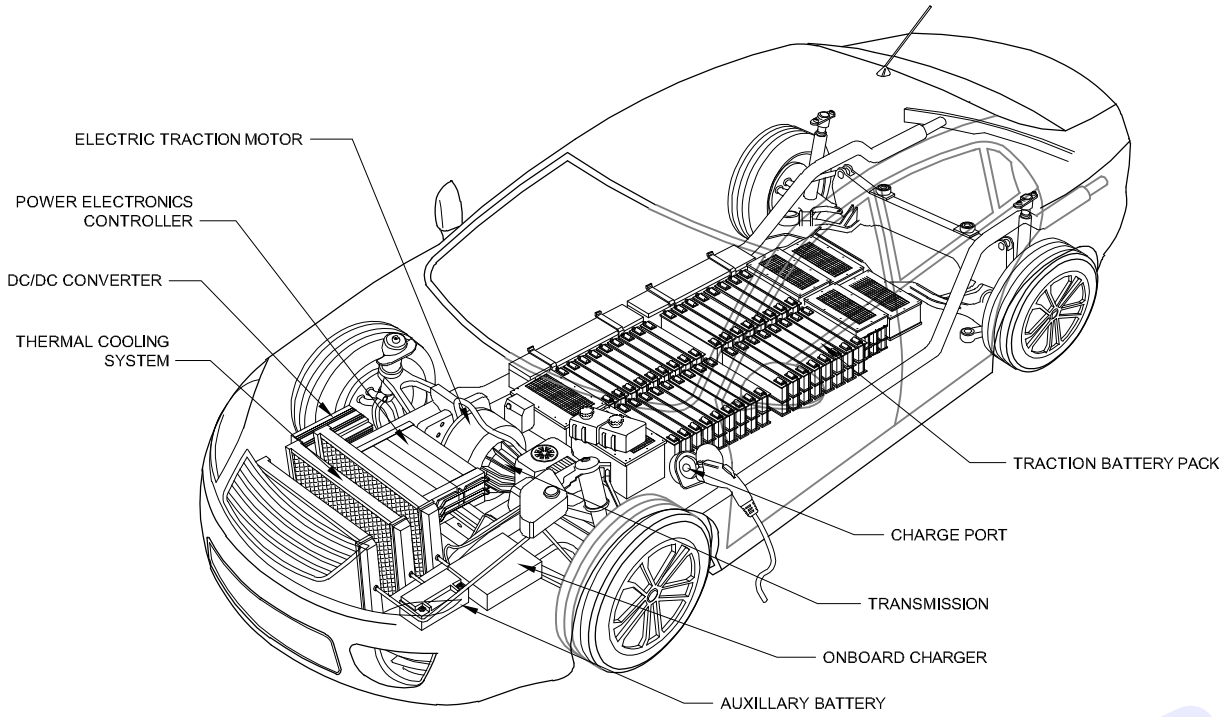

BATTERY ELECTRIC VEHICLE (BEV)

Note: Instructor has to indicate the electric vehicle's transmission parts and explain their function of each part.

© NIMI NOT TO BE REPUBLISHED

— — — — — —

Practice to identify the basic components of electric vehicle

Objectives: At the end of this exercise you shall be able to
- **identify the basic components of each type of electric vehicle and comparision to IC engine based vehicle.**

Requirements

Tools / Instruments

- Trainees tool kit - 1 No.
- Electric vehicle manual - 1 No.
- I.C Engine vehicle manual - 1No.

Equipments / Machineries

- Electric vehicle - 1 No.
- I.C Engine vehicle - 1No.

Materials

- Cotton cloth - as reqd.
- Soap oil - as reqd.
- Vechicle cleaning meterials - as reqd.

PROCEDURE

Task 1 : **Identifing the basic key components of all electric car**

- Park the electric vehicle on the shop floor
- Clean the vehicle and open the bonnet and doors of the vehicle
- Study the EV manual for identify the basic components of electric vehicle
- Identify the location of the battery of vehicle
- Identify the EV charge port location on the vehicle
- Identify the DC/DC converter location on the vehicle
- Identify the rear view of a reversing screen display
- Identify the location and their connection of electric traction motor
- Identify the on board charger point on the vehicle
- Identify the location of power electronic controller fixed on the electric vehicle
- Identify the thermal system (cooling system) of electric vehicle
- Identify the vehicle slip ratio indicator
- Identify the traction battery pack location of the electric vehicle
- Identify the display of turning status
- Identify the schematic of fault diagnosis system
- Identify the transmission transfers mechanical power from the electric traction motor to drive the wheels in the electric vehicle
- If the hybrid electric vehicle (HEV) identify the internal combustion engine and its fuel tank and other system related to ICE.
- Identify the control module of HEV and PHEV vehicles
- Identify the battery pack with controller & inverter
- Identify the fuel cell stack incase of fuel cell electric vehicle (FCEV)
- Identify the hydrogen storage Tank (FCEV)

© NIMI NOT TO BE REPUBLISHED

Fig 1

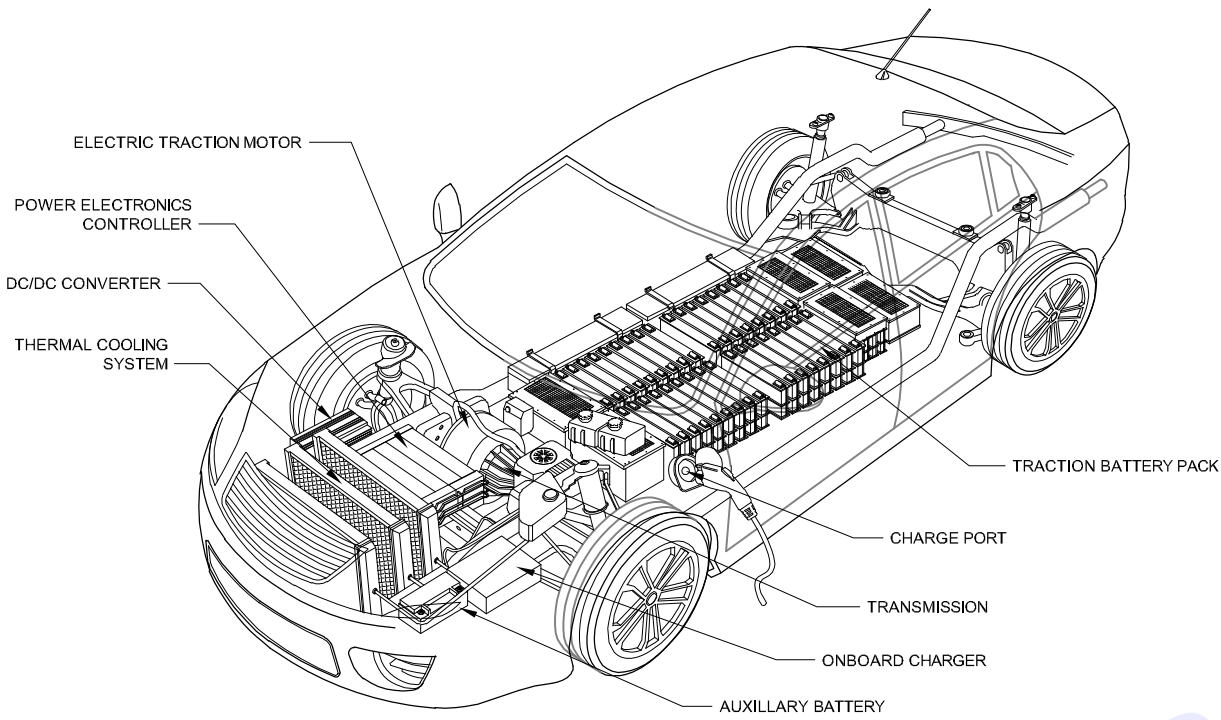

BATTERY ELECTRIC VEHICLE (BEV)

— — — — — —

TASK 2: **Comparison of electric vehicle with IC engine vehicle transmission system**

- Park the electric vehicle and I.C engine vehicle in your trade section.
- Study both the types of vehicles manuals to achieve the knowledge of transmission components and their functions.
- Write down the comparison of electric vehicle transmission components with I.C engine vehicle transmission parts and their functions in Table -1.

© NIMI NOT TO BE REPUBLISHED

Table - 1

S. No.	Power of source	Electric vehicle	I.C Engine Vehicle	Remarks
1	Energy source	Battery	Engine	
2	Energy used	Electrical	Fuel	
3	Energy conversion	Electrical motor	Gear box	
4				
5				
6				
7				
8				
9				
10				
11				

— — — — — —

Practice on calculation of traction motor effort

Objectives: At the end of this exercise you shall be able to
- **calculate the basic motor power consumption.**

Requirements

Tools/Instruments
- Trainees tool kit - 1 No.

Equipments / Machineries
- Electric Vehicle - 1 No.

Materials
- Cotton waste - as reqd.
- Soap oil - as reqd.

PROCEDURE

Task 1 : **Calculation of traction motor effort.**

Note: The Instructor has to demonstrate the traction motor's effort calculation method

- Park the vehicle on the shop floor
- Apply parking brake for vehicle safety

Note: The instaneous traction power required to move the vehicle forward or reverse at a given velocity is a traction motor effort

- Before start the motor check the following for check the motor effort.
- Motor power quality.
- Harmonic distortion.
- Motor's variable frequency drives.
- Motor's winding insulation, break down loads to unplanned downtime.
- Check the sigma current (current flow through motor).
- Operational overload.
- Motor angular misalignment.
- Parallel misaligment.
- Compund misalignment.
- Premature wear in mechanical drive components.
- Dirt accumulation in motor.
- Missing balance weights.
- Manufacturing variations.
- Uneven mass in motor windings and other wear related factor.
- Rotating looseness
- Non-rotating looseness such as a foot and motor mounting or bearing housing.
- Heavier load than designed for transmission.
- Inaduquate lubrication
- Ineffective bearing sealing
- Induced shaft voltages
- Accelerated wear on rotating components

Note:

There are two types of torque measurement is used to measure the motor effort (1) diesel torque measurement (2) indirect measurement. Torque may be defines the turning power of the traction motor.

The motor torque may be effect by the vehicle rolling resistance Grade resistance and vehicle acceleration force.

Use the formula for calculating the rolling resistance

RR = GVWxCrr

RR = Rolling resistance

GVW = Gross vehicle weight

Crr = Co-efficient of rolling resistance

Use the formula for calculating the grade resistance

GR = GVWxSinφ

Sinφ = Grade or inclination angle

Use the formula for the acceleration force

FA = mxa

M = GVW/g

FA - Acceleration force

M = Mass of the vehicle

G = Acceleration due to gravity (9.81m/sec)

- Use the formula for finding the total tractive effort of motor can be calculated as

  TTE = RR + GR = FA

  TTE = Total tractive effort

- Use the formula for required torque on the drive wheel as

© NIMI NOT TO BE REPUBLISHED

t = RsxTTExWheel

t = torque

- Rs = Friction factor that account for frictions losses between bearings, axles etc.

  rwheel = radius of drive wheel
- Suppose if you want to measure the effort of traction motor separately follow the steps given below.
- Disconnect the battery power supply.
- Use the PPE While you are working in electrical vehicle.
- Identify the traction motor's electrical and mechanical connections.
- Dismount the electrical and mechanical connections with traction motor.
- Dismount the motor mountings and carefully remove the traction motor and keep it on the torque effort test bench.
- Clean the motor and mount the motor on the torque effort test bench.
- Connect the wire connections and ensure the battery power connection is properly connected with motor.
- Select anyone type of torque testing method to test the motor like strain gauge method, Proxy brake method slip ring arrangement in torque transducer, torsion bar method, capacitive method laser optic method, proximity sensor for torque measurement, stroscope method and magnetostrictive method and more modern testing methods are used to check the torque effort of the motor.
- If you are using strain gauges for motor shaft torque measurement follow as shown in Fig 1.
- Fix the strain gauge on the motors output shaft and ensure the strain gauges are placed preciously at 45° to the shaft axis as shown in Fig 1&2.

Fig 1

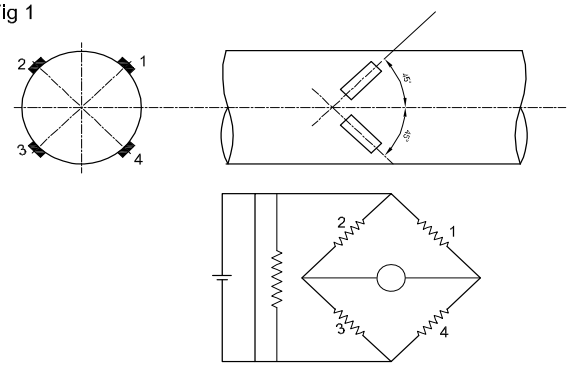

STRAIN GUAGES FOR SHAFT TORQUE MEASUREMENT

Fig 2

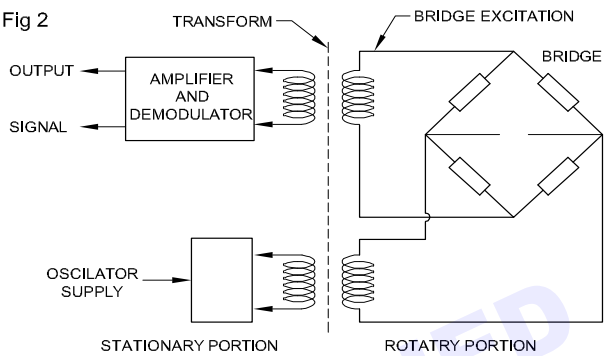

BLOCK CIRCUIT DIAGRAM FOR ROTATING SENSORS WITH AC SUPPLY

- Switch on the main supply to motor and strain gauges.
- Note the reading of motor torque effort in various motor Rpm.
- Compare the motor torque reading with motor manufacturers specifications.
- Ensure motor torque effort is as recommend by the vehicle manufacturer.
- Note the motor effort measurement in the following table 1

Table 1

S. No.	Factors	Practical calculation of motor effort	Motor effort specification of manufacturer	Result
1	Load torque of meter	Battery	Engine	
2	Motor speed	Electrical	Fuel	
3	Effort losses by friction	Electrical motor	Gear box	
4	Voltage supply			
5	Voltage drop			
6	Speed and gear ratio			
7				

— — — — — —

© NIMI NOT TO BE REPUBLISHED

Practice on check the voltage of E.V chopper circuit

Objectives: At the end of this exercise you shall be able to
- **trace the circuit of electric vehicle**
- **measure the voltage of traction motor power supply circuit.**

Requirements

Tools / Instruments

- Trainee's tool kit - 1 Set.
- Digital multi meter - 1 No
- Voltmeter - 1 No
- EV's instruction manual - 1 No

Equipments / Machineries

- Electric vehicle - 1 No

Materials

- Cotton cloth - as reqd.
- Soap oil - as reqd.
- Wire - as reqd.
- Insulation tape - as reqd.
- Wire connector - as reqd.

PROCEDURE

TASK 1: **Tracing the electric circuit of electric vehicle**

Note : The instructor has to explain about the method of referring the instruction manual to trace the electric circuit of the electric vehicle

- Park the electric vehicle on the shop floor and apply parking brake.
- Clean the vehicle and identify the vehicle parts.
- Study the vehicle manual for tracing electric circuits.
- Identify and trace the various electric circuit connections.
- Select the electric drive system circuit for measuring a voltage through the circuit.
- Study the components fitted with the circuit of the traction motor (Fig.1).

© NIMI NOT TO BE REPUBLISHED

Fig 1

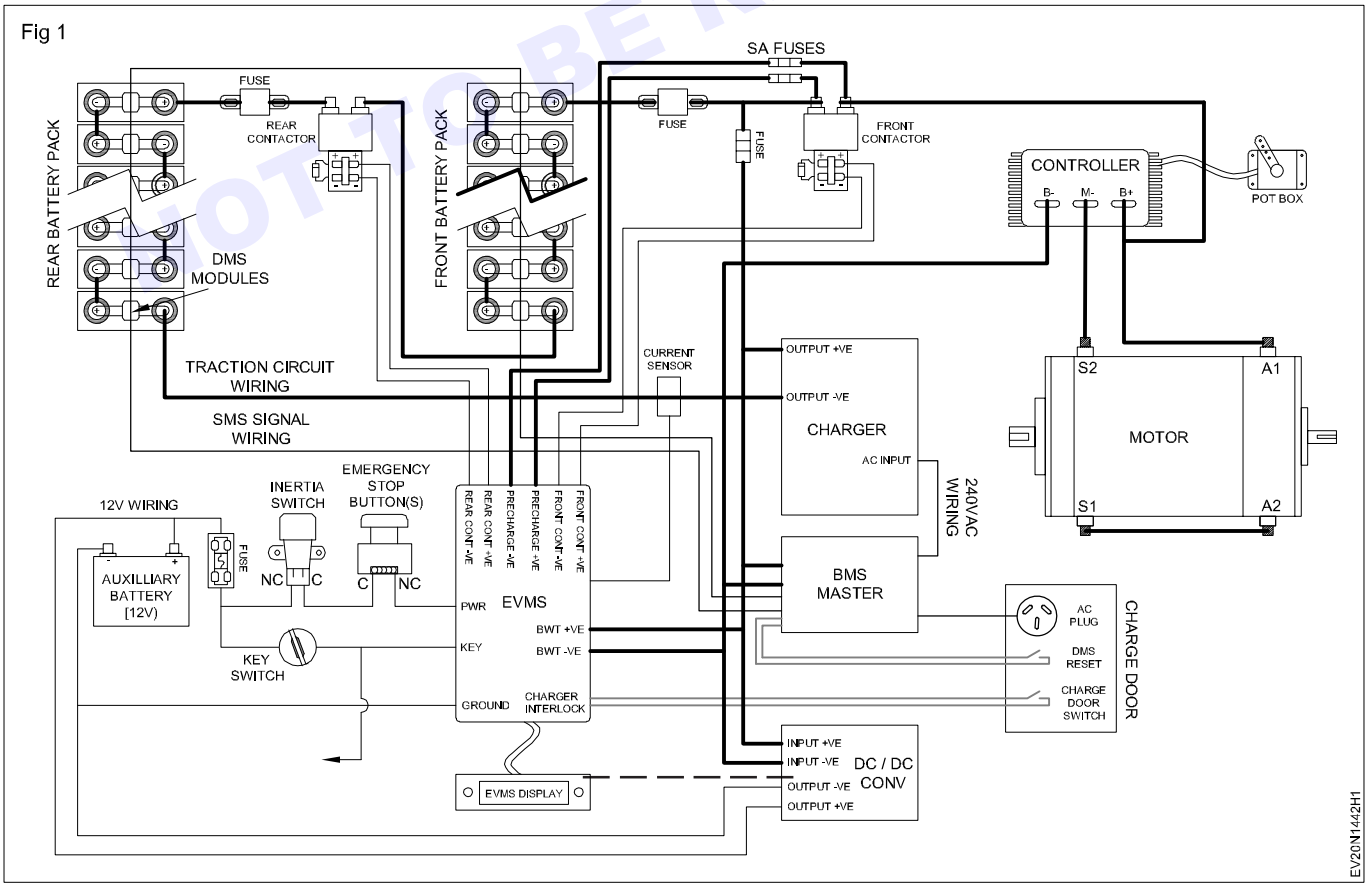

TASK 2: **Measuring a voltage of traction motor drive system circuit**

- Study the wiring diagram.
- Refer the data book of power supply to traction motor.
- Select the DC voltmeter to check the voltage power supply in a traction motor power supply unit.
- Check the voltmeter's serviceability.
- Observe the battery supply terminals and polarity of voltmeter before connecting the voltmeter with in a circuit.
- Connect the wires on voltmeter terminal + positive and - negative.
- Turn off the battery power to the circuit.
- Connect the voltmeter with in a circuit as shown in the Fig.1 TP1.TP3.
- Power ON the battery power to the EV's circuit.
- Check the voltage passing through circuit as shown in the Fig 1.
- Note the voltage reading display in voltmeter.
- Switch OFF the battery power and disconnect the voltmeter wire connection.

Note : If DC voltmeter is not available use digital multi meter to measure the voltage in electrical circuit.

- **Select the multi meter and set the voltage nearest to power supply to traction motor (Fig 2&3).**
- **Connect the red and black probe with traction motor circuit motor circuits T2,T3 as shown in the Fig 4.**

- Power ON the battery and switch on the traction motor power supply.
- Note the reading in multi meter panel.
- Switch OFF the traction motor power and battery power supply.
- Compare the reading noted with voltmeter and multi meter reading.
- Find the difference between the voltage reading (Voltage drop).

Fig 2

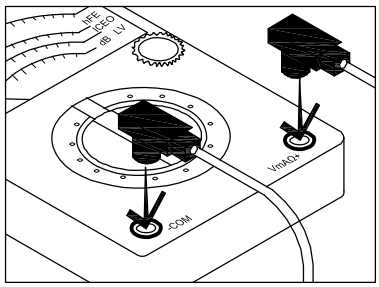

EV20N1442J2

Fig 3

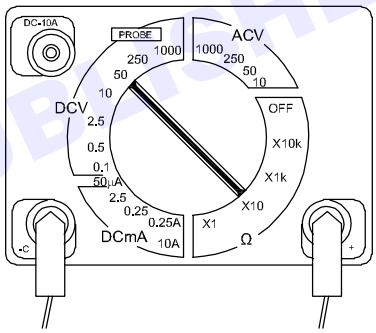

EV20N1442J3

Fig 1

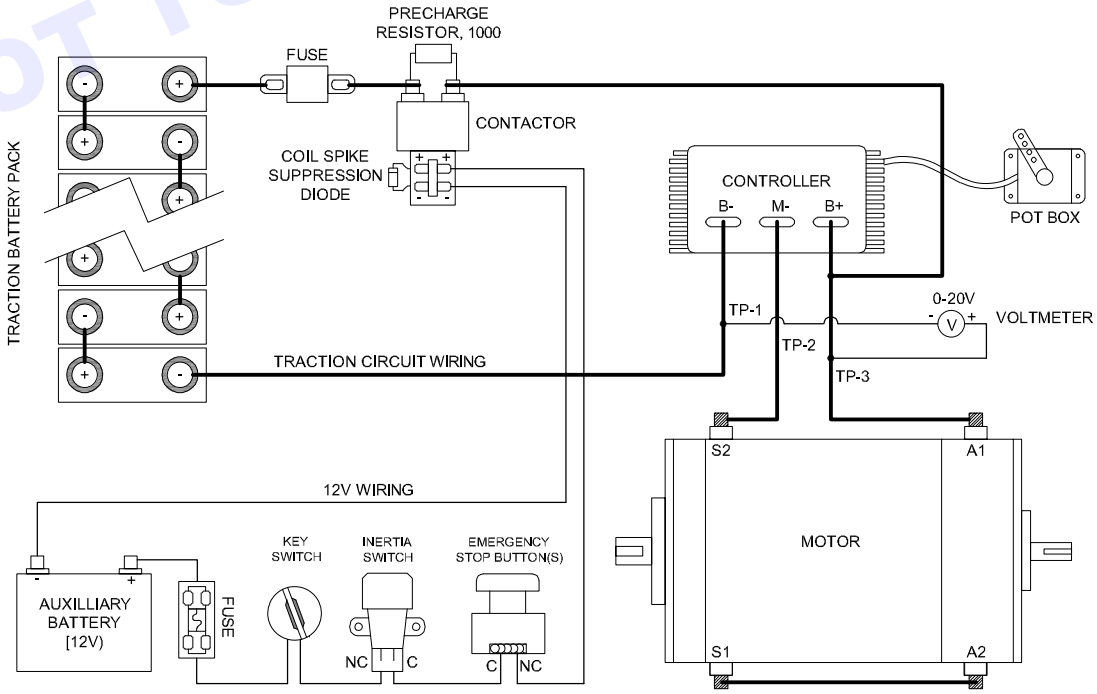

EV20N1442J1

© NIMI NOT TO BE REPUBLISHED

Fig 4

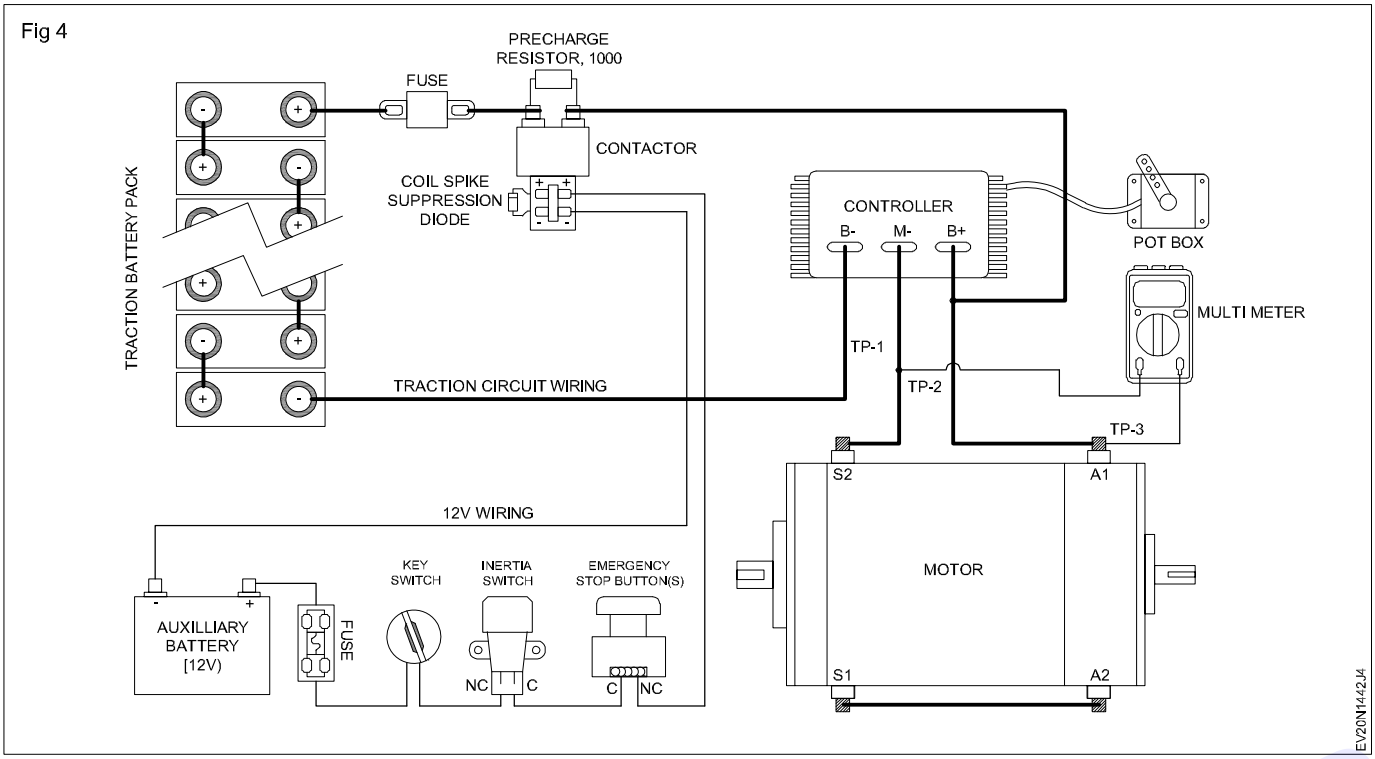

— — — — — —

© NIMI
NOT TO BE REPUBLISHED

Practice on test the amplifier output torque and efficiency

Objectives: At the end of this exercise you shall be able to
- **test the amplifier output torque**
- **test the efficiency of amplifier at different condition.**

Requirements

Tools / Instruments

- Trainee's tool kit - 1 Set.
- Multi meter - 1 No.
- Techo meter - 1 No.
- Vehicle manual - 1 No.

Equipments / Machineries

- Electric vehicle - 1 No.
- Test bench - 1 No.
- Electric vehicle - 1 No.
- 3 phase induction motor - 1 No.
- Battery bank with charger - 1 No.

Materials

- Cotton cloth - as reqd.
- Soap oil - as reqd.
- Wire - as reqd.
- Insulation tape - as reqd.
- Wire connector - as reqd.

PROCEDURE

TASK 1: **Testing an amplifier output torque of electric vehicle.**

Note: The instructor has to explain and guide to check the amplifier input, output and traction motor torque and efficiency of E.V

- Park the vehicle on the shop floor and apply parking brake for safety.
- Trace the EV'S amplifier circuit of traction motor.
- Select the multi meter and torque testing instrument.
- Set the multi meter range near amplifier specification data.
- Switch ON the battery power and ON the amplifier switch.
- Note the DC voltage reading displayed on the multi meter panel.
- Switch OFF the battery power and remove the multi meter probe.
- Connect the multi meter probes on output wires of amplifier can deliver to its load.
- Switch ON the battery power and note output voltage displayed on the multi meter.
- Compare the input voltage and output voltage of amplifier.
- Find voltage difference between them and compare it with manufactures specification data.
- Ensure the amplifier circuit working properly with various load conditions.

— — — — — —

TASK 2: **Testing a AC 3 phase traction motor's torque and efficiency of E.V**

- Select the suitable torque measuring instrument for test the torque and efficiency of traction motor (Testing lab).
- Check the test motor whether AC or DC motor and single phase or 3 phase motor.
- Select a 9 inch 96 V 3 phase IM model AC 50-02-1 (Fig 1).
- Ensure the battery bank used 8 x 12 V batteries with 90 Ah capacity for a total of 96 Volt DC.
- Select the 3 phase induction motor controller model 1238 with operating current up to 558 Amp.
- Suppose AC 3 phase induction motor connect the measuring instrument with test motor and run the motor with no load condition.
- Give load on motor from stop position to reach a certain speed fixed by you.for different resistive loads of motor (Fig 5).

© NIMI NOT TO BE REPUBLISHED

- Keeping certain speed for certain period of time and declarative with different resistive load of motor from 0 RPM TO 3000 RPM.
- Run the load to maximum safe value for batteries.
- Note different speed at different torque reading of the induction motor.
- Note: Ensure a speed accelerator in a specific unit that sends speed controls commands to controller allowing the foot control (Fig.3, 4).

Fig 1

Fig 2

Fig 3

Fig 4

- All tests are based on fixed speed rotation of the motor to get results.
- Note down the calculation and observation in Table-1 for analysis the torque and efficiency value variation at different input voltages load torques and operating frequencies.

Fig 5

© NIMI NOT TO BE REPUBLISHED

Table - 1

S. No.	Test Parameters	No Load condition	Load condition	Remarks
1	Amplifier input voltage			
2	Amplifier output voltage			
3	Amplifier output current			
4	Motor torque			
5	Motor speed			
6	Motor power			
7	Efficiency			

— — — — — —

TASK 3: **Dc traction motor laboratory testing desk**

- Set the testing laboratory desk with following components
- DC Series motor of suitable power and size to drive a small medium size car
- DC Series motor controller suitable for the selected motor
- Battery bank which would be the main source of power for the tests chosen with a capacity suitable for the size of a light weight or medium size car
- Throttle control by means of an electric car foot pedal
- A source of mechanical loading, chosen to be an AC electric generator with selective variable resistive loads connected to an output that converts the measured electric load in to a relative mechanical load on the DC Series motor
- Select the 48 v DC Series motor (Fig 1).

Fig 1

- Select the controller that has 48 v DC supply and can handle upto 275 Amp with proper thermal cooling (Fig 2).

Fig 2

- Select a battery bank used 2 (4 X 12 V) batteries with 90 Ah capacity (Fig 3).

Fig 3

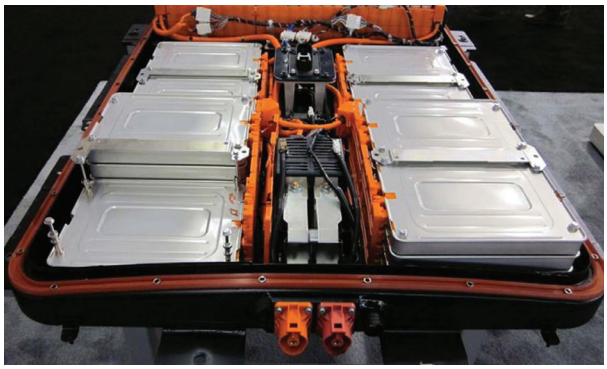

© NIMI NOT TO BE REPUBLISHED

- Select the throttle controller for send speed control commands to controller allowing foot control designed for electric vehicle (Fig 4).

Fig 4

- Couple the DC traction motor with 32.5 KVA electric induction generator with 3 phase 380/220 v AC output and 49.4 Amp current at 1500 RPM (Fig 5).

Fig 5

Note : The instructor has to show demo on AC and DC traction motor testing method in workshop lab test bench. Then ask the trainees to do practice to test the motors.

- Use the pulley system with ratio of 2:1 to reduce the RPM 2850 to 1500 double belt pulley is suitable for minimizing any slip factor during the motor load tests.
- Set a DC controller for speed limit of the motor are limited to a maximum of 3000RPM (Fig 6).

Fig 6

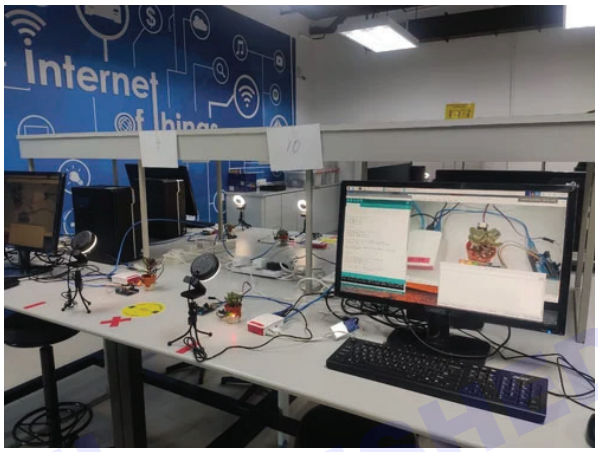

- Use a different resistance load to simulate a medium to heavy load at full speed of 2850 RPM for the motor.
- According to above test method you can find the verifying loads, speeds torque and efficiency.
- Note the different speed and torque RPM of the DC traction motor in your note book.

© NIMI NOT TO BE REPUBLISHED

— — — — — —

Practice on traction motor's bearing and stator winding replacement

Objectives: At the end of this exercise you shall be able to
- **replace the bearing of traction motor**
- **replace the stator copper winding**
- **greasing, assembling and testing the traction motor.**

Requirements

Tools / Instruments

- Trainee's tool kit - 1 Set.
- Bearing puller - 1 No

Equipments / Machineries

- Electric vehicle - 1 No
- Used traction motor - 1 No

Materials

- Cotton waste - as reqd.
- Soap oil - as reqd.
- Grease - as reqd.
- Cleaning material - as reqd.
- Nuts and bolts - as reqd.
- Stator coil - as reqd.
- Bearing - as reqd.

PROCEDURE

TASK 1: **Replacing the bearing of traction motor**

- Select any one type of electric vehicle.
- Park the electric vehicle on the shop floor and apply parking brake for safety.
- Disconnect the battery cable.
- Trace the traction motor location and wire connections, mounting etc.
- Disconnect the motor wire connections and drive system parts.
- Dismount the traction motor's mounting nuts and bolts.
- Carefully remove the motor from the vehicle.
- Clean the motor with cleaning solvent.
- Dismantle the motor's cooling fan case.
- Loosen the mounting nut of cooling fan and remove the nuts.
- Remove the fan from rotor shaft.
- Remove the rotor from the stator case (Fig.1).
- Remove both side ball bearing of rotor assembly with help of bearing puller.
- Clean the bearing and rotor of the motor.
- Check the ball bearing condition, if need replace it.
- Fit the new bearing and axial fan on rotor shaft.
- Check the rotor's serviceability by testing instrument.

Fig 1

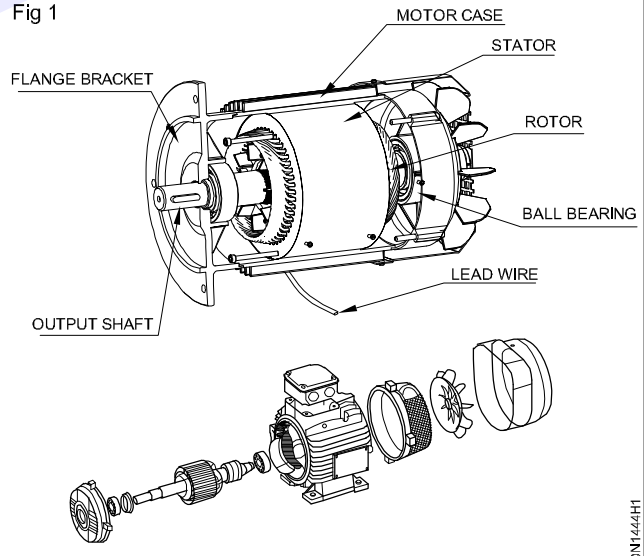

PARTS OF 3 PHASE INDUCTION MOTOR

— — — — — —

TASK 2: **Replacing the stator's copper winding**

- Visually inspect the traction motor's stator coil and their connection.
- Disconnect stator winding mounting screw.
- Remove the stator coil from motor housing.

© NIMI NOT TO BE REPUBLISHED

- Visually check the copper coil and their continuity.
- If found any damage or short circuit replace the stator. winding
- Select a suitable stator copper coil and fix it with motor housing and connect wire.
- Ensure the stator coil is properly fitted in motor housing.

— — — — — —

TASK 3: **Greasing, assembling and testing the traction motor**

- Apply the grease on ball bearing if need.
- Fix the rotor assembly in the motor housing.
- Fix the flange bracket and fan cover.
- Rotate the rotor by moving output shaft.
- Ensure the rotor is freely rotating without touching a stator.
- Mount the traction motor on the vehicle and connect the wire connection with motor.
- Connect the drive system with traction motor.
- Ensure EV's drive system is properly connected.
- Connect the battery cable and switch ON the battery power and motor power.
- Run the motor without load to find any noise.

Fig 1

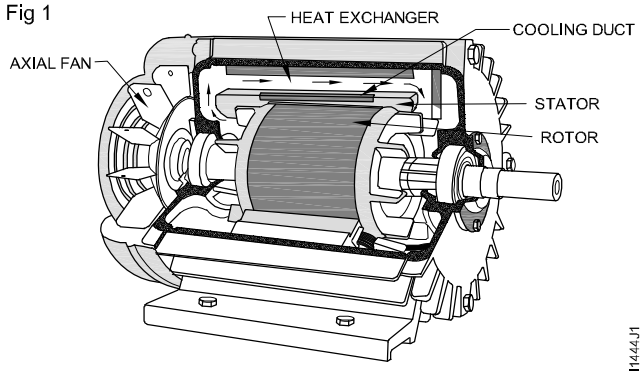

ELECTRIC VEHICLE MOTOR

- If motor runs smoothly give load to run the vehicle (Fig 1).
- Ensure EV is running smoothly at various speed.

— — — — — —

© NIMI
NOT TO BE REPUBLISHED

Practice on identify the various automobile systems

Objectives: At the end of this exercise you shall be able to
- **identify various automobile systems and their sub systems.**

Requirements

Tools / Instruments
- Trainee's tool kit - 1 Set.
- Vehicle chart - 1 No.

Equipments / Machineries
- Electric vehicle - 1 No.
- I.C Engine vehicle - 1 No.

Materials
- Cotton cloth - as reqd.
- Soap oil - as reqd.

PROCEDURE

TASK 1: **Identification of various automobile systems and sub systems (Fig 1&2)**

- Park the I.C. engine vehicle on the shop floor, if need keep the vehicle on the vehicle service ramps.
- Apply hand brake and wooden plank to the front and rear wheels.
- Study the vehicle chart or vehicle manual before you go to identify the parts of the vehicle.

Note: The instructor has to explain about the various systems and subsystems location and their uses in vehicle operation system.

- Identify the location of vehicle steering system(1).
- Identify the location of vehicle engine (Front, centre, rear).
- Identify the vehicle transmission system clutch (3) gear box (4)differential wheels etc.
- Identify the chassis and frame(5)(rectangular, I- shape, channel type).
- Identify the suspension system(6) (Shock observer, leaf springs, torsion bar etc).
- Identify the brake system (Fool brake, parking brake, air brake, hydraulic brake, drum brake, disc brake etc).
- Identify the cooling system (8) (Air cooling, liquid cooling).
- Identify the wheel and tyres (7).
- Identify the fuel system(9) (petrol, diesel, CNG, CRDi etc).
- Identify the intake and exhaust system(10).
- Identify the front and rear axle(11) (Dead,live axle).
- Identify the propeller shaft (12) and universal joints (13) in between the gear box and differential(14).

Fig 1

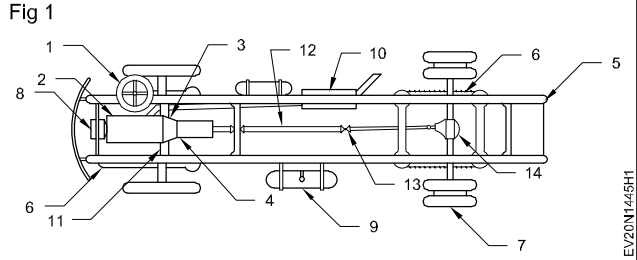

- Identify electrical and electronic system.
- Write down the vehicle systems and subsystems names and functions in Table - 1.

Table - 1

S. No.	Automobile system	Automobile subsystems	Function of the system	Remarks
1	Engine	Petrol, diesel, CNG, LPG	Energy source	
2	Steering	Manual, power, steering	Fuel	
3	Brake	Hydraulic brake, air brake	Gear box	
4	Fuel	Petrol, diesel, CNG, LPG		

© NIMI NOT TO BE REPUBLISHED

S. No.	Automobile system	Automobile subsystems	Function of the system	Remarks
5	Intake system			
6	Exhaust system			
7	Suspension type			
8	Transmission			
9				
10				
11				

Fig 2

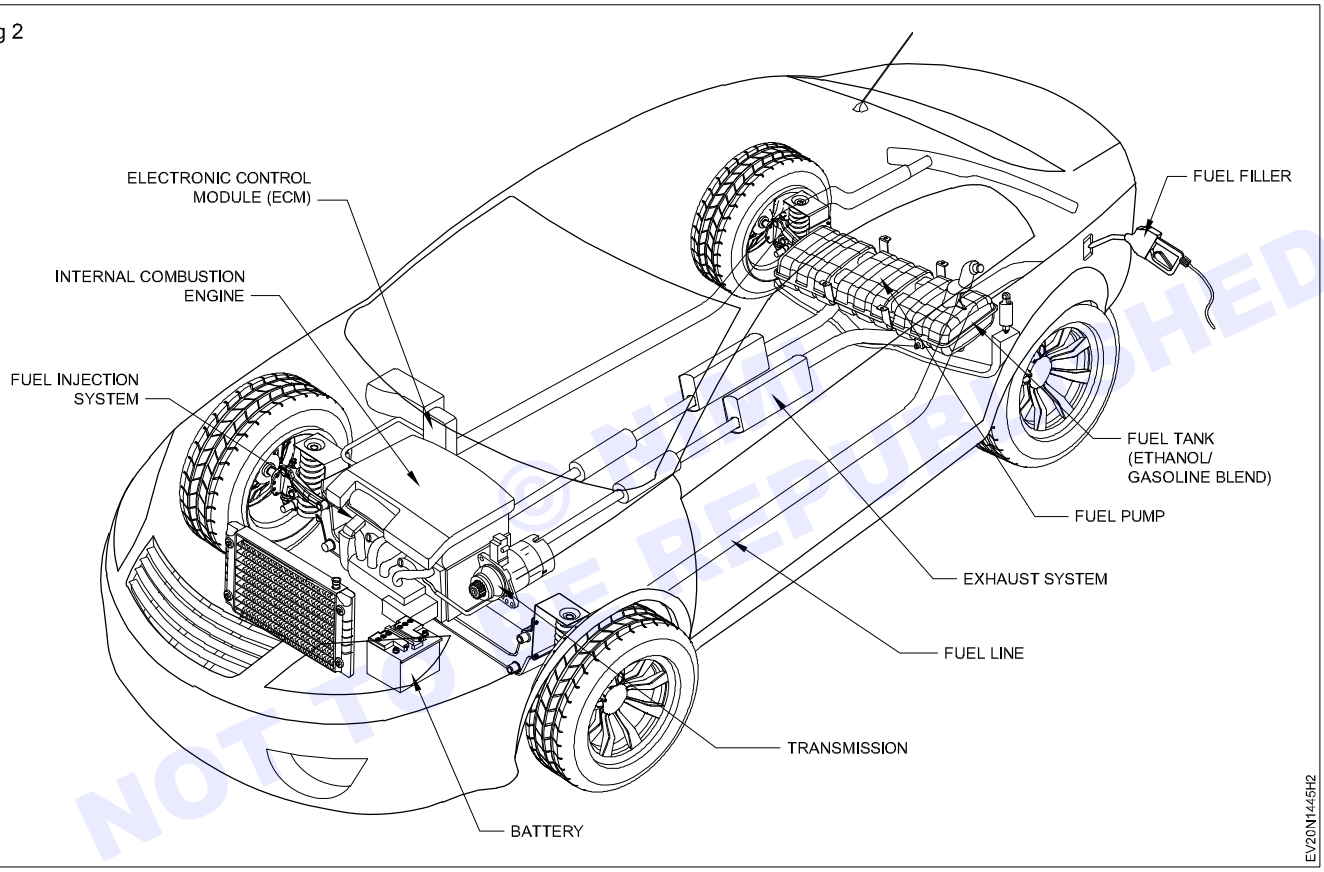

© NIMI NOT TO BE REPUBLISHED

TASK 2: **Identification of various systems and sub systems of electric vehicle (Fig 2)**

- Park the vehicle on the shop floor
- Study the vehicle manual and achieve the knowledge about the parts of electric vehicle
- Identify the EV parts as shown in Fig 1
- Write down the EV operating systems and their subsystems in table 1

Table - 1

S. No.	EV operating system	Function of the system	Remarks
1	Traction battery pack		
2	Auxiliary battery		
3	Traction motor		
4			
5			
6			
7			
8			
9			
10			

Fig 1

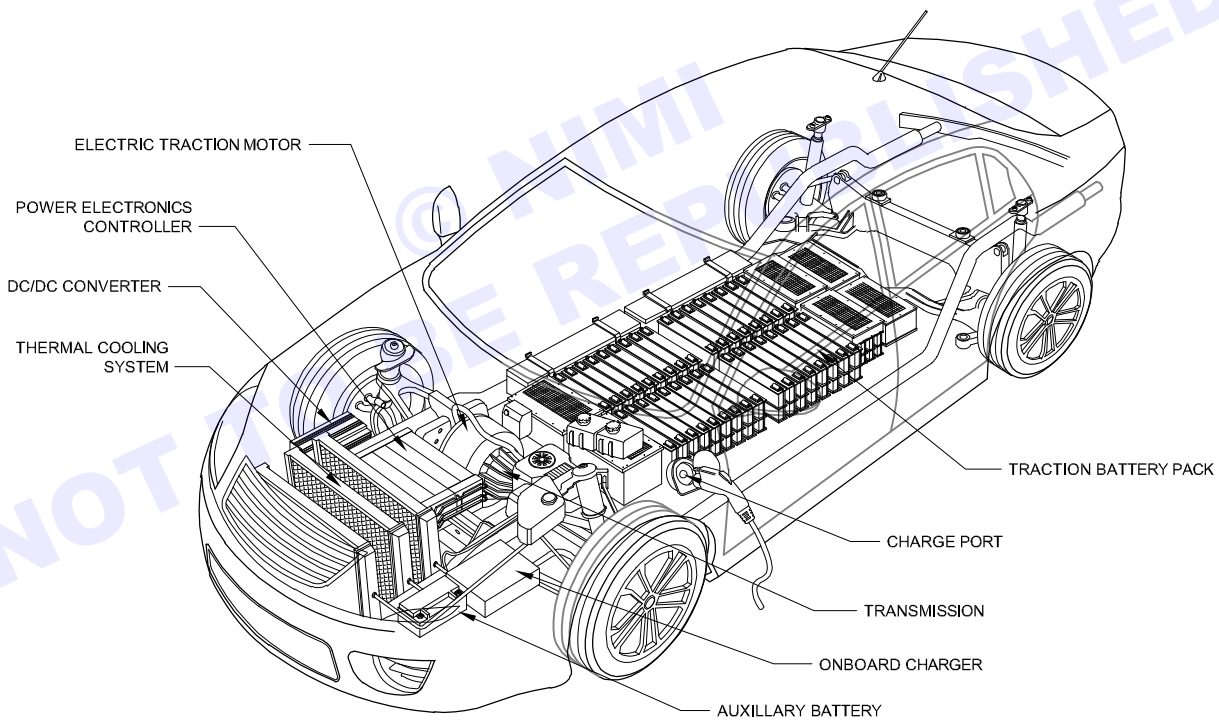

BATTERY ELECTRIC VEHICLE (BEV)

© NIMI NOT TO BE REPUBLISHED

— — — — — —

Comparative analysis on body over chassis and Monocoqu body of a vehicle

Objectives: At the end of this exercise you shall be able to
- **study the body over chassis of a vehicle**
- **study the Monocoqu body of the vehicle**
- **compare and analyze the both types of vehicle body.**

Requirements

Tools / Instruments
- Trainee's tool kit - 1 Set.
- Vehicle manual - 1 No each type.

Equipments / Machineries
- Body over chassis vehicle - 1 No.
- Monocoqu body vehicle - 1 No.

Materials
- Cotton cloth - as reqd.
- Soap oil - as reqd.

PROCEDURE

TASK 1: **Comparing the body over chassis and Monocoqu body of the vehicle**

Note: The instructor has to provide body over chassis and Monocoqu body of the vehicle and explain the difference between them.

- Park the body over chassis type vehicle and Monocoqu body vehicle on the floor.
- Study the vehicle's manual to achieve knowledge about the construction structure of both types of vehicle body.
- Inspect both type of vehicle body structure and find the variation between them.
- Discuss with stake holders to explore the implication and difference between two vehicles.

Note: Monocoqu chassis designs are rare on road cars but it is mostly used in sports car, it is a combination of chassis and body.

- Note down the comparative statement in Table 1

Table - 1

S. No.	Monocoqu body	Body on chassis frame	Remarks
1	Light weight	Heavy weight	
2	Carbon fiber/ aluminium body	Tin sheet metal body	
3	More economical to produce	More costly to produce	
4	Car strength is much less	better than Monocoqu body	
5	More space to use	Less space to use	
6	Superior torsional rigidity		
7	Less ground clearance		
8	Less seating capacity		
9	Low pay loads and towing ability		
10	Easier minor crash repair		
11	Very difficult to replace a damaged cabin		
12	Very difficult to modify body style		

© NIMI NOT TO BE REPUBLISHED

Fig 1

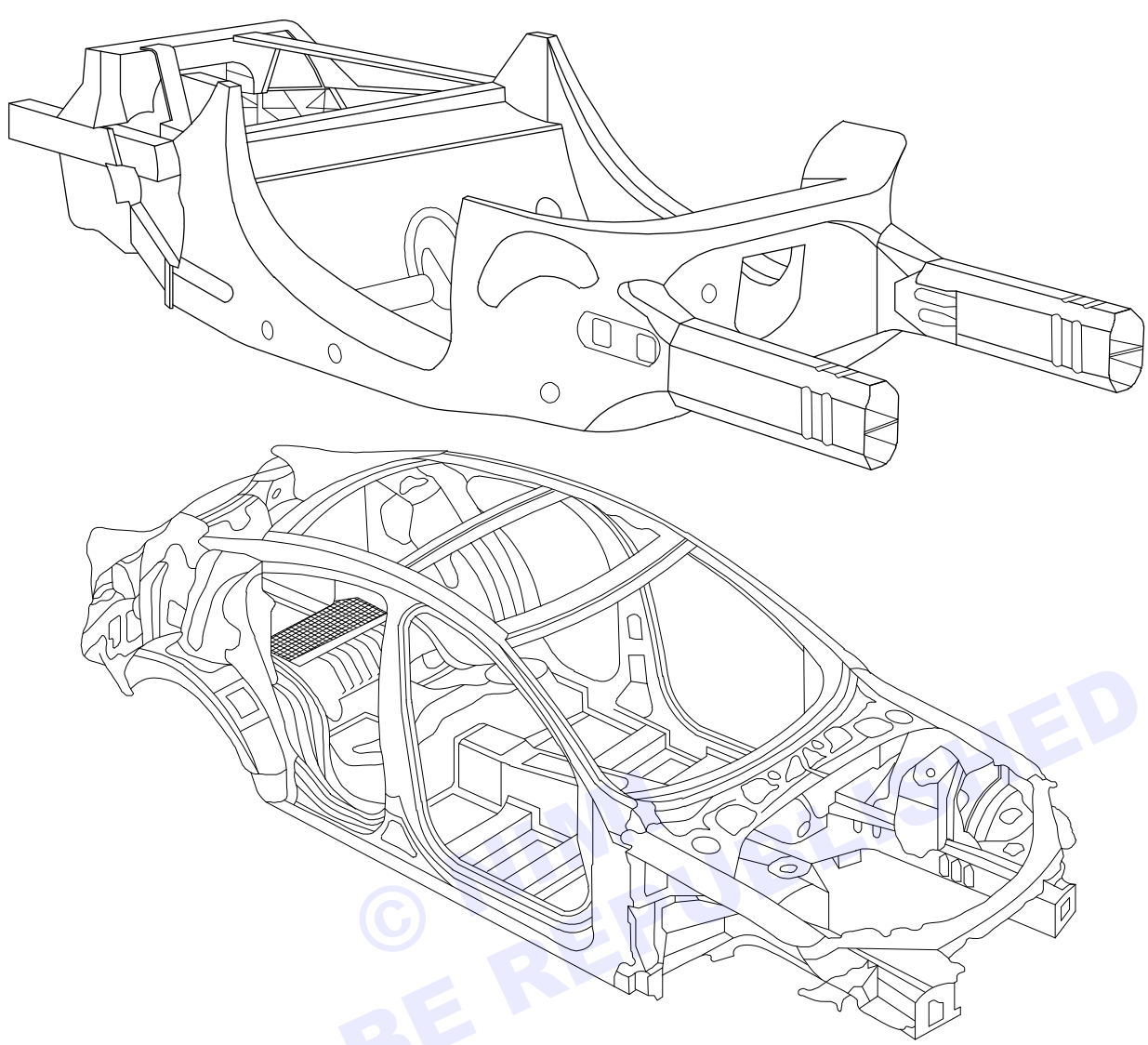

MONOCOQUE BODY

EV20N1446H1

Fig 2

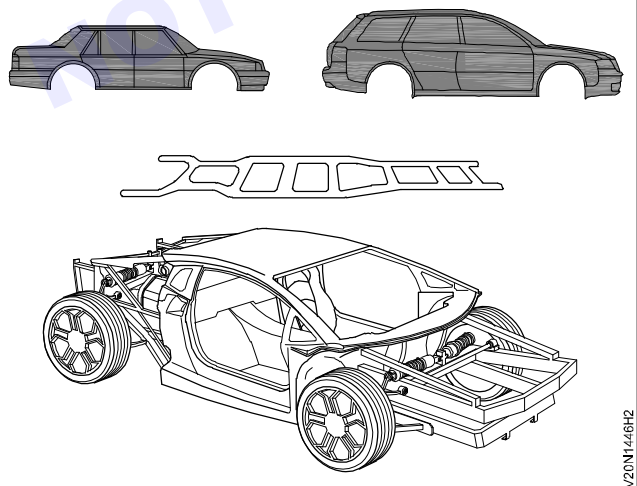

EV20N1446H2

- Body on frame, The chassis and body is separately made units (Fig 2).

Note: A unibody auto frame is like a Monocoqu body, it has to be thick enough to hold up the drive train. It is including a sub frame around the drive train allow the uni body to be thinner with a lighter overall vehicle.

© NIMI NOT TO BE REPUBLISHED

Practice to identify the external and internal vehicle body components and their functions

Objectives: At the end of this exercise you shall be able to
- **identify external components of electric vehicle**
- **identify the internal components of electric vehicles.**

Requirements

Tools / Instruments
- Trainee's tool kit - 1 Set.
- Vehicle manual - 1 No.

Equipments / Machineries
- Electric vehicle - 1 No.
- Skeleton structure of E.V - 1 No.

Materials
- Cotton waste - as reqd.
- Soap oil - as reqd.

PROCEDURE

TASK 1: **Identifying the external and internal body components of E.V's and their functions.**

- Select any one type of electric vehicle.
- Park the vehicle on the surface place and apply parking brake.

Note : The instructor has to indicate the external and internal parts of electric vehicle by using skeleton structure of a E.V. vehicle and explain the function of each part and compare it with full body structure.

- Visually identify the E.V body external parts like front end, side frame, side wall, roof frame, rear end, head light, indicator light, parking light, wiper blade, wind shield glass, charge port, on board charger etc (Fig,1,2).
- Identify the internal components of electrical vehicle like floor frame, dash board, cross beam, auxiliary battery, traction battery pack, (cooling) thermal system, DC/DC converter, power electronic controller, electronic traction motor, audio system, AC system, internal body lights, steering, brake, accelerator dash board control systems, seat belt, transmission system, suspension system etc(Fig 2).
- Write the name of external parts and their functions in Table -1.
- Write the internal parts name and their function in Table 2.

© NIMI NOT TO BE REPUBLISHED

Table - 1

External parts of electric vehicle body

S. No.	External parts of E.V. vehicle body	Function of parts	Remarks
1	Front end	Strengthen the front end of E.V's body	
2	Rear end	Strengthen the end of rear end E.V's body	
3	Side wall frame	Strengthen the side wall of the body	
4	Roof wall frame	Strengthen the roof frame of vehicle body	
5	Front wall		
6	Charge port		
7	Head light		
8	Brake light		
9	Wind shield glass.		
10	Wiper blade		

Fig 1

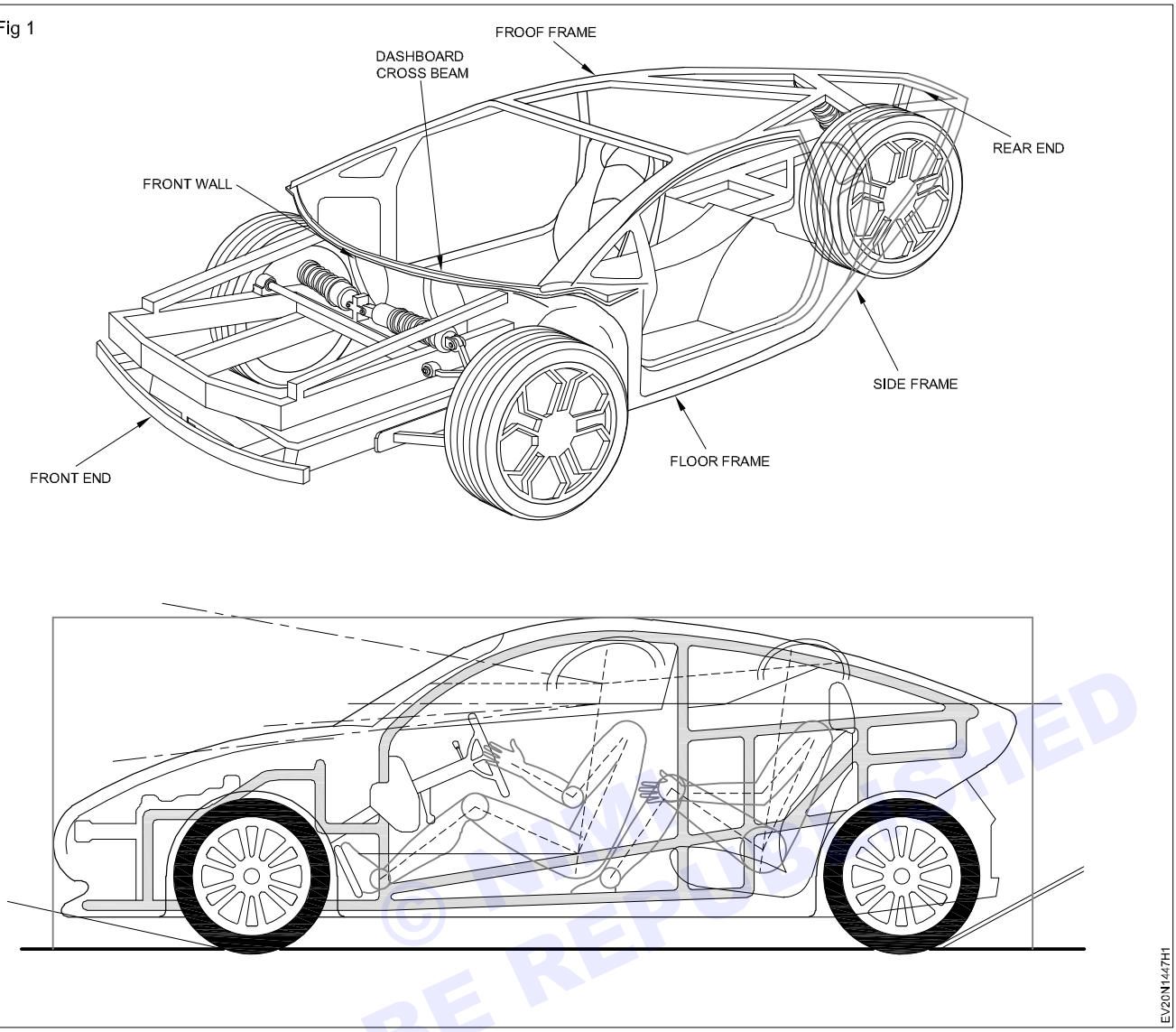

Fig 2

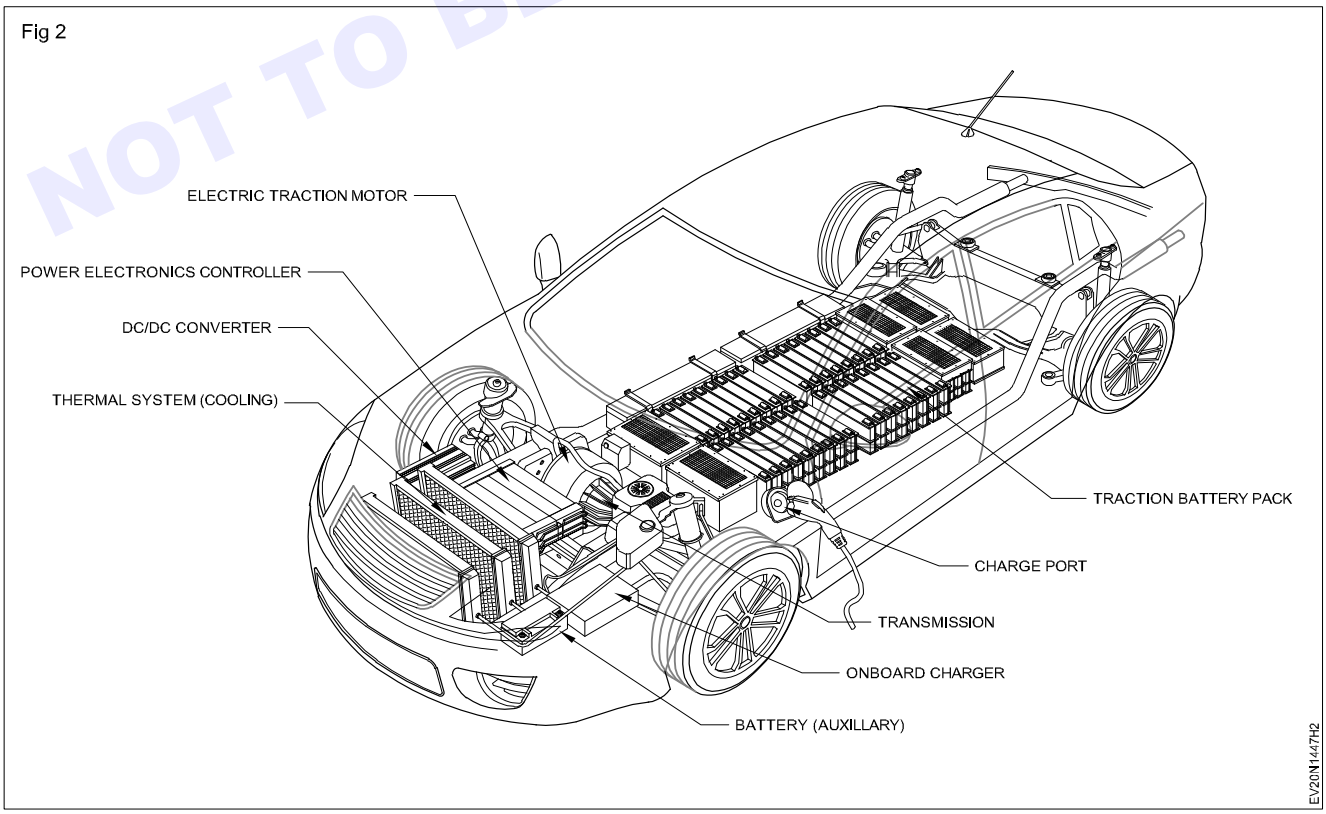

© NIMI NOT TO BE REPUBLISHED

Table - 2

Internal parts of electric vehicle body

S. No.	Internal fitted components	Function components	Remarks
1	Traction battery pack	Stores electricity for use by the traction motor	
2	Thermal cooling system range of electric motor	Maintains a proper operating temperature	
3	Electric traction motor	The motor drives the vehicle wheels	
4	Battery (Auxiliary)	Auxiliary battery provides electricity to power vehicle accessories	
5	Dash board gauges & switches		
6	Power electronic controller		
7	Audio system		
8	Dash board cross beam		
9	Floor frame		
10	wiper motor		
11	DC/DC converter		
12	On board charger		
13	Steering		
14	Brake		
15	Accelerator Pedal		

— — — — — —

© NIMI NOT TO BE REPUBLISHED

Practice to draw sketches to show the functions of E.V's components

Objectives: At the end of this exercise you shall be able to
- **draw a sketches to show the function of various operating components.**

Requirements

Tools / Instruments
- Trainee's tool kit - 1 Set.
- Vehicle manual - 1 No.

Equipments / Machineries
- Electric vehicle - 1 No.

Materials
- Cotton cloth - as reqd.
- Soap oil - as reqd.
- Paper - as reqd.
- Pencil - as reqd.
- Eraser - as reqd.

PROCEDURE

TASK 1: **Drawing sketches to show the functions of various operating components**

Note: The instructor has to place the electric vehicle operating demo components and explain the function and power flow to the wheels.

- Ask the trainees to draw the sketches of components power flow diagram in the log book.

Fig 1

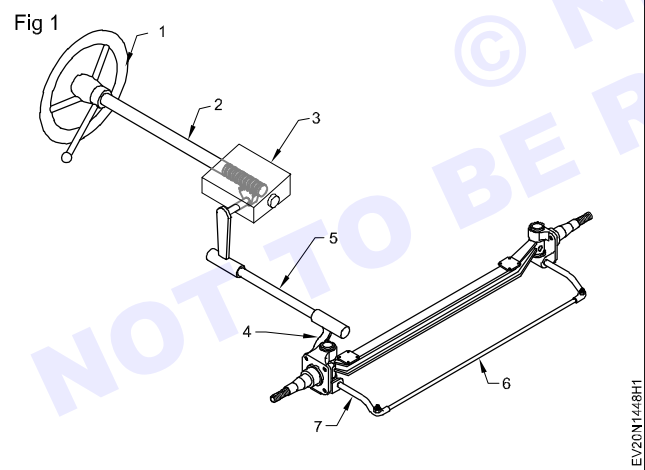

- Draw the functional sketch of steering wheel.
- Draw the functional sketch of transmission system.
- Draw the functional sketch of brake system of E.V.
- Draw the functional sketch of battery charge of E.V.

Fig 2

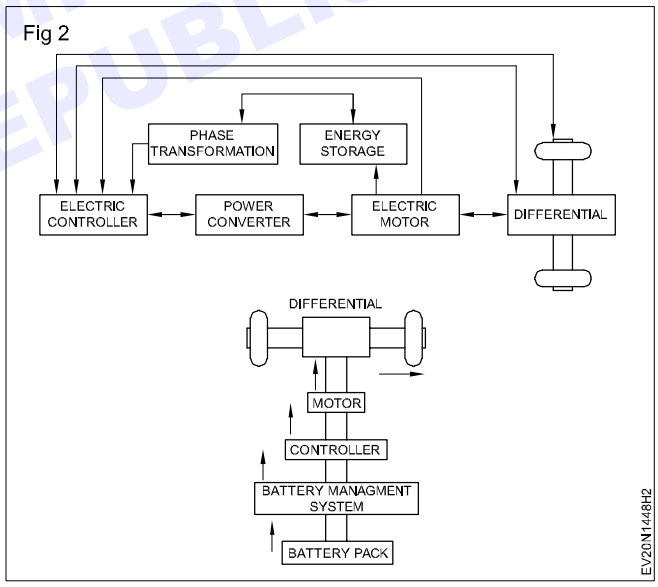

© NIMI NOT TO BE REPUBLISHED

— — — — — —

Practice to identify the power train and its types

Objectives: At the end of this exercise you shall be able to
- **identify the power train and its types of Electric vehicle.**

Requirements

Tools / Instruments
- Trainee's tool kit - 1 Set.
- Vehicle manual - 1 No.

Equipments / Machineries
- Electric vehicle - 1 No.
- Transmission cut module - 1 No.

Materials
- Cotton waste - as reqd.
- Soap oil - as reqd.

PROCEDURE

TASK 1: **Identification of different types of power train and its types**

Note: The instructor has to explain the basic principles and characteristics of each power train type of Electric vehicle and show demonstration of power train in transmission system.

- Park the Electric vehicle and apply parking brake.

Fig 1

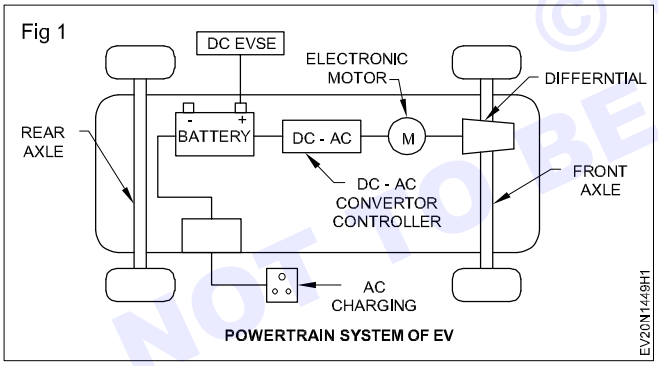

POWERTRAIN SYSTEM OF EV

- Study the vehicle manual to achieve the knowledge of power train components and power train methods.
- Identify the E.v 's power train components like battery pack, DC/DC controller or DC-AC converter + controller, Electric motor single ratio transmission (Fig1.)
- Identify the body control module and components like ECU, power windows, mirrors, security and vehicle access control sensors, Electrical system dash board lights, AC system and audio and video systems and other power consume systems.
- Measure the power train in each component under your instructor's guide lines.

Note: When power transfer or operate the components, during the process loss of power is known as power train.

- Note: the power train in Table-1.

© NIMI NOT TO BE REPUBLISHED

— — — — — —

Table- 1

S. No.	Power train components	Power input	Power output	Power loses	Remarks
1	Battery				
2	DC/DC converter				
3	Controller				
4	Traction motor				
5	Horn relay				
6	Head light relay				
7	Remote accessory				
8	Other electrical accessories				
9	Others				

— — — — — —

© NIMI
NOT TO BE REPUBLISHED

Practice on identification of transmission and driveline components

Objectives: At the end of this exercise you shall be able to
- **identify the transmission and drive line components in electric vehicle**
- **identify the transmission and drive line components of PHEV and I.C Engine Vehicle.**

Requirements

Tools / Instruments
- Trainee's tool kit - 1 Set.
- Vehicle manual - 1 No.

Equipments / Machineries
- Electric vehicle - 1 No.
- I.C. engine vehicle - 1 No.

Materials
- Cotton cloth - as reqd.
- Soap oil - as reqd.

PROCEDURE

TASK 1: **Identifing the electric vehicle's transmission and drive line components**

Note: The instructor has to display Electric vehicle transmission components on the work bench and explain about power flow through transmission components and function of each components.

- Park the vehicle on the shop floor or service ramp.
- Apply hand brake to prevent vehicle move.
- Study the electric transmission power flow diagram.
- Identify the components of electric vehicle along with power flow diagram with your hand.
- Identify the transmission components of different types of E.Vs with reference to the manual.
- Identify each type of vehicle transmission components as shown in the figure 1 to 6 and note down the components and its function in table - 01.

© NIMI NOT TO BE REPUBLISHED

Electric Vehicle Transmission Components

Table- 1

S. No.	Transmission components	Type of E.V	Function of components	Remarks
1				
2				
3				
4				
5				
6				
7				
8				
9				

Fig 1

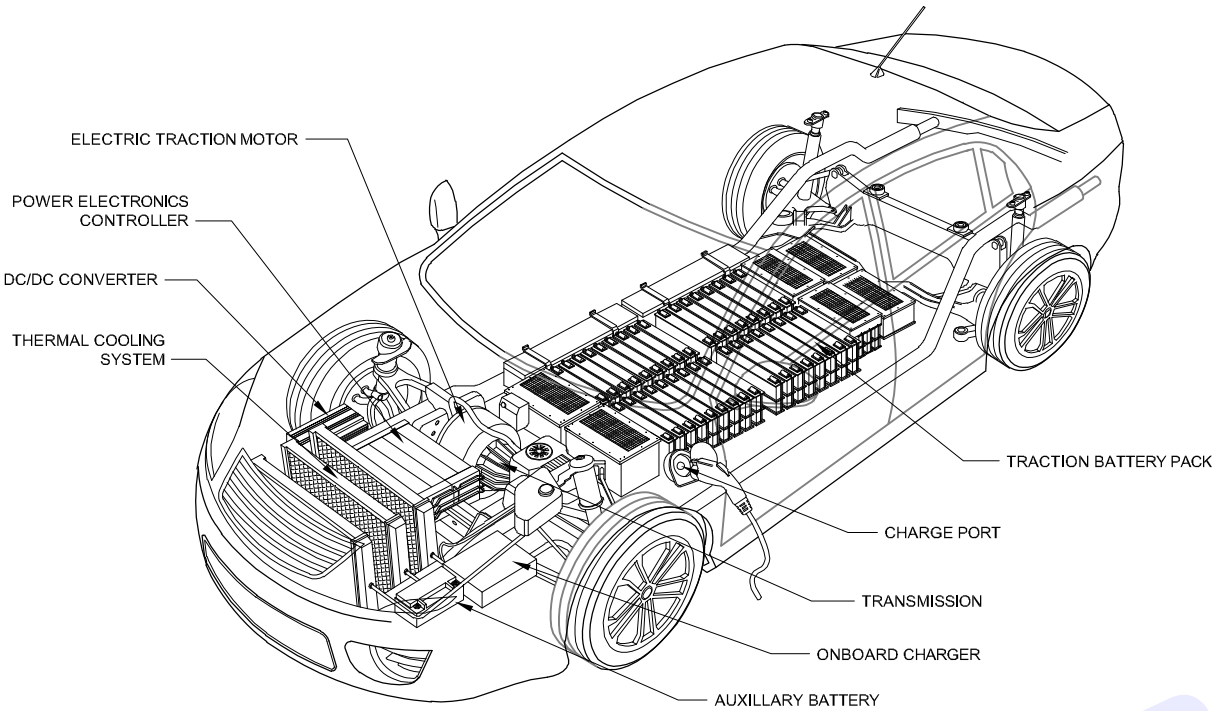

BATTERY ELECTRIC VEHICLE (BEV)

Fig 2

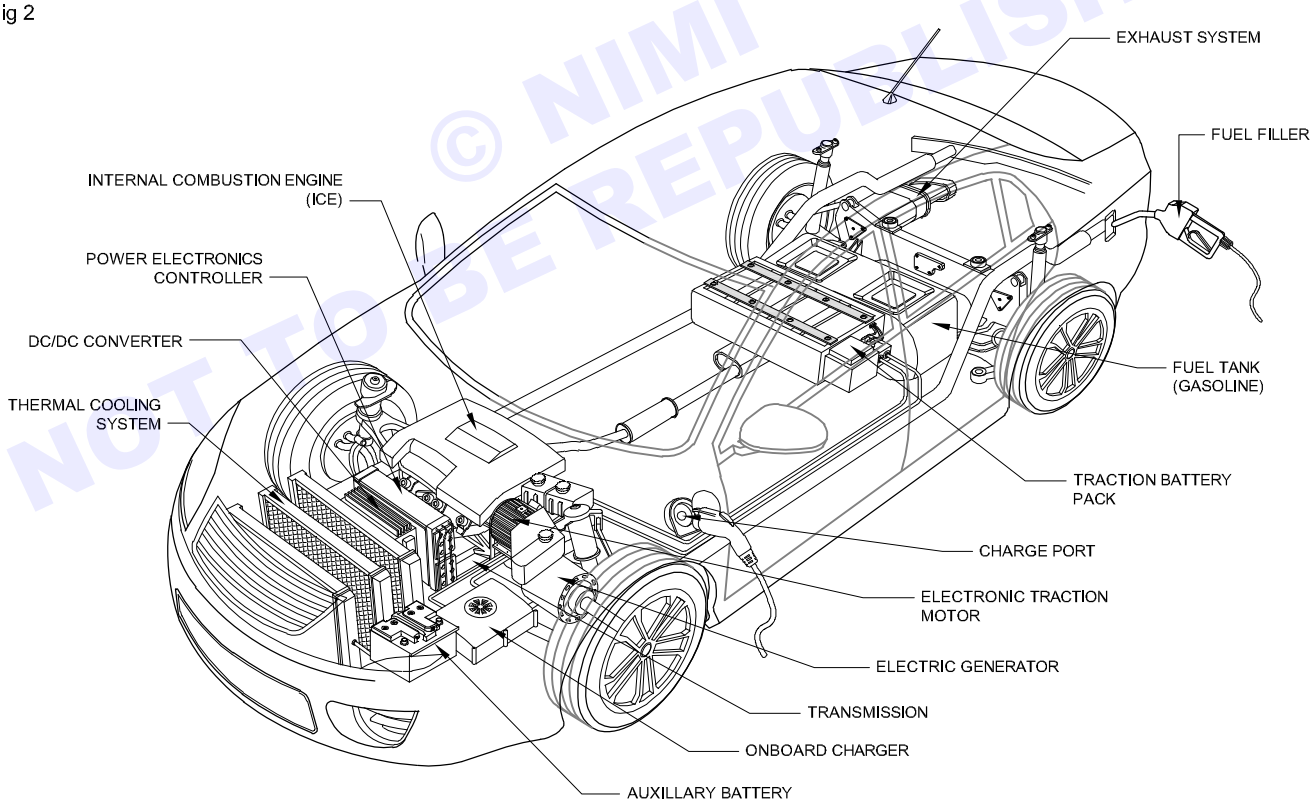

PLUG - IN HYBRID ELECTRIC VEHICLE (PHEV)

© NIMI NOT TO BE REPUBLISHED

Fig 3

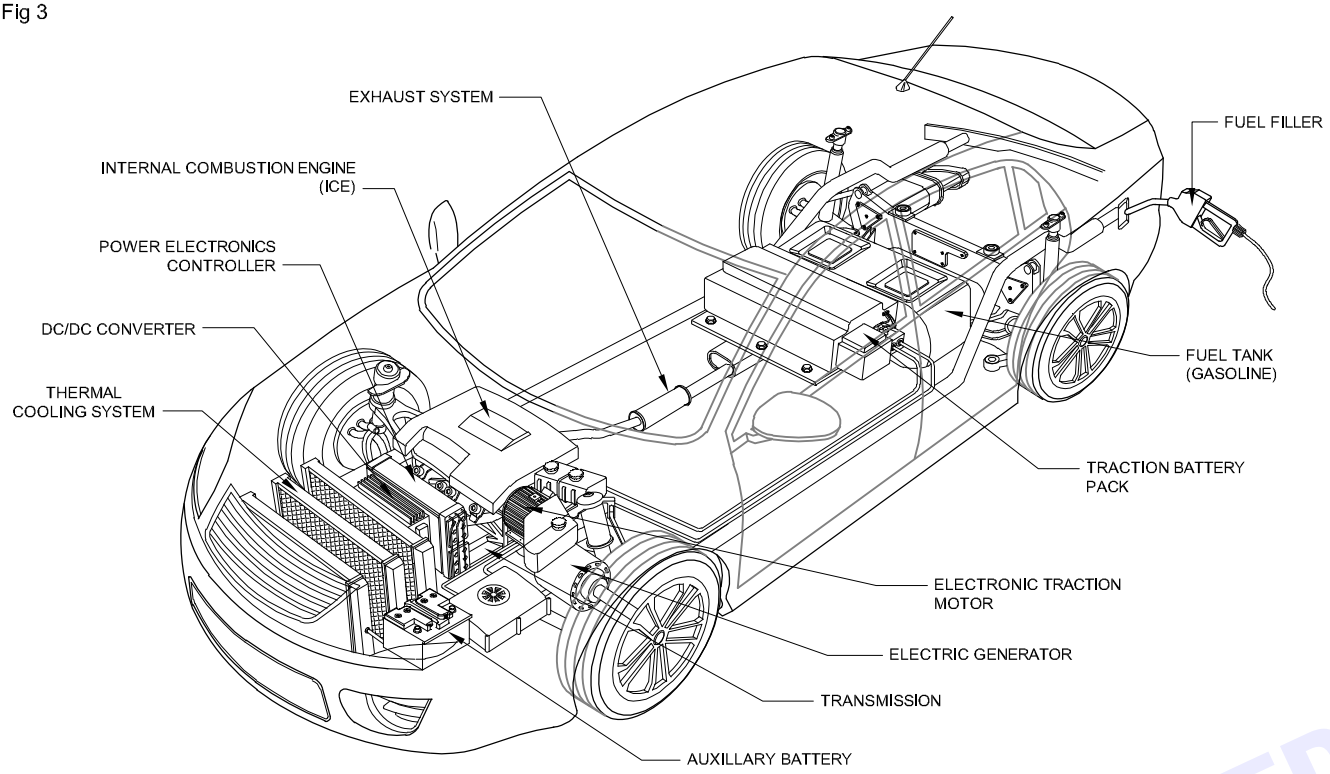

HYBRID ELECTRIC VEHICLE (HEV)

Fig 4

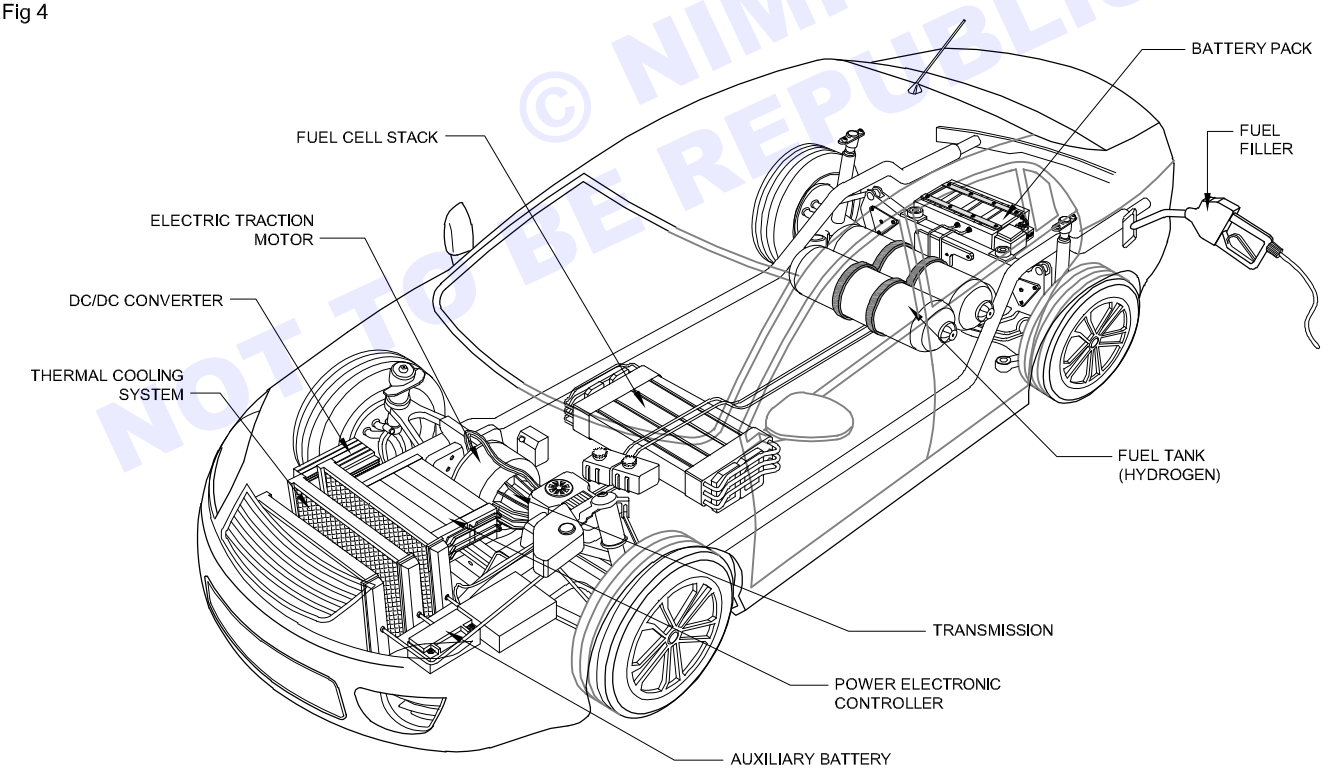

BATTERY ELECTRIC VEHICLE (BEV)

© NIMI NOT TO BE REPUBLISHED

Fig 5

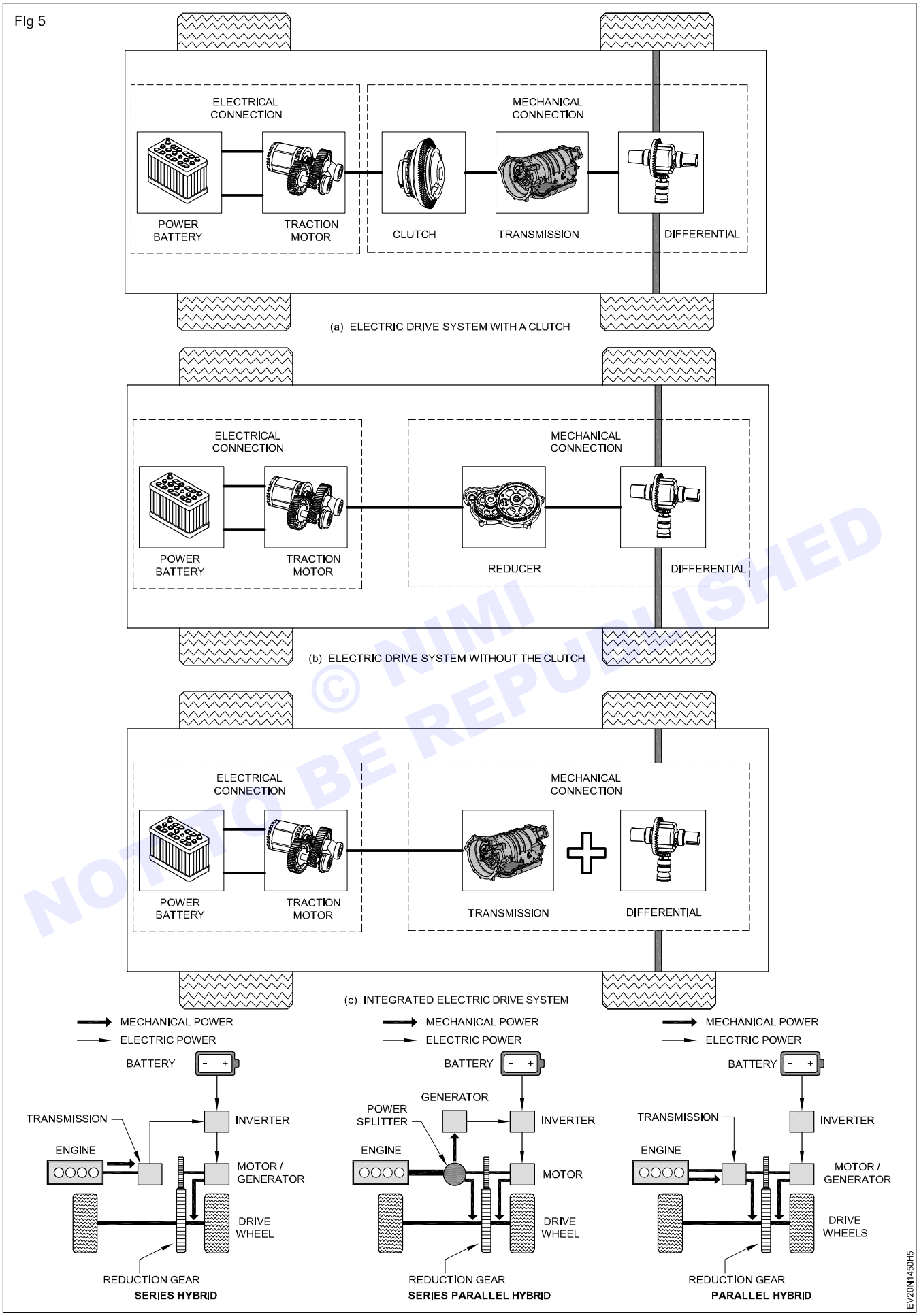

© NIMI NOT TO BE REPUBLISHED

TASK 2: **Identifying a I.C Engine vehicle transmission system of rear wheel and front wheel drive line components.**

Note: The instructor has to explain the basic concept of transmission and drive line components of I.C engine vehicle.

Fig 1

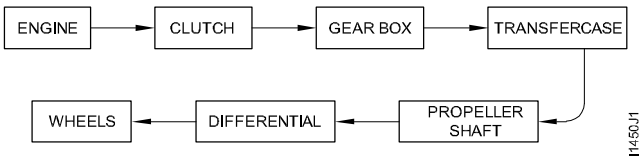

TRANSMISSION POWER FLOW DIAGRAM

- Park the I.C. engine vehicle on the ramp.
- Apply wooden plank to the wheels.
- Study the vehicle manual to achieve knowledge about vehicle transmission drive lines components (Fig.1).
- Identify the engine fly wheel.
- Identify the clutch assembly and its operating system.
- Identify the gear box and shaft.
- Identify the transfer case.
- Identify the wheels.
- Interact with co- trainees about a vehicle's drive .line components structures and power flow.

— — — — — —

© NIMI NOT TO BE REPUBLISHED

Practice on identification of steering system components

Objectives: At the end of this exercise you shall be able to
- **identify the manual steering system components**
- **identify the power steering system components.**

Requirements

Tools / Instruments

- Trainee's tool kit - 1 Set.
- Vehicle manual - 1 No.

Equipments / Machineries

- Vehicle with manual steering - 1 No.
- Vehicle with power steering - 1 No.

Materials

- Cotton waste - as reqd.
- Soap oil - as reqd.

PROCEDURE

TASK 1: **Identifying the steering system components of Electric vehicle**

Note: The instructor has to be explain about basic need of steering and its each components function

- Park any type of electric vehicle on the shop floor.
- Apply hand brake for safety.
- Study the vehicle manual to achieve the knowledge of steering components.
- Identify the steering wheel (15).
- Identify the steering inner and outer column (14).
- Identify the steering gear box (16).
- Identify the cross section shaft (13).
- Identify the steering drop arm (11).
- Identify the pull and push rod (10).

Fig 1

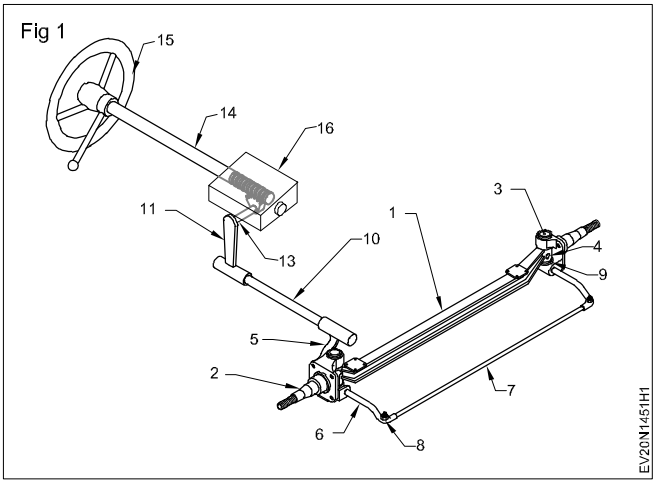

- Identify the knuckle arm (6).
- Identify the steering arm (5).
- Identify the tie rod.
- Identify the tie rod ends.
- Identify the king pin.
- Identify the front axle (1).
- Identify the front wheels.
- identify the stub axle (2).
- Identify the stub axle housing (4).
- Identify the knuckle bearing (3).
- Identify the power steering system components as shown in figure -2.
- Write down the steering components name and their function in table -1.

Fig 2

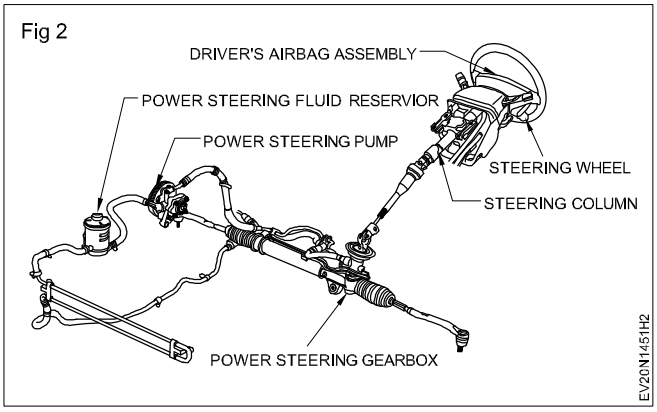

© NIMI NOT TO BE REPUBLISHED

Table- 1

S. No.	Steering components	Types of steering	Functions of components	Remarks
1	Steering wheel			
2	Steering gear box			
3	Hydraulic pump			
4	Fluid reservior			
5	Drivers airbag			
6	Pull and pushrod			
7	Steering arm			
8	King pin			
9	Tie rod			

— — — — — —

© NIMI
NOT TO BE REPUBLISHED

Practice on identify the suspension system components

Objectives: At the end of this exercise you shall be able to
- **identify the E.V's suspension system components.**

Requirements

Tools / Instruments

- Trainee's tool kit - 1 Set.
- Vehicle manual - 1 No

Equipments / Machineries

- Electric vehicle - 1 No

Materials

- Cotton waste - as reqd.
- Soap oil - as reqd.
- Shock observer - as reqd.
- Leaf spring - as reqd.
- Torsion bar - as reqd.
- Torque rod - as reqd.

PROCEDURE

TASK 1: **Identification of Electric vehicle suspension system**

Note: The instructor has to give demonstration on vehicle suspension system components and explain the function of each component while vehicle running on the road.

- Most of the electric car use independent suspension system and medium, heavy vehicles use independent and convensional suspension system.
- Park the electric car and commercial vehicle on the shop floor.
- Apply hand brake and wooden plank to the wheels.
- Study the vehicle manual to identify the suspension components or follow your instructor's guide lines.
- Look around the vehicle and find which type of suspension used in the vehicle.
- Identify the rigid/ non independent system or independent suspension system.
- Identify the different types of suspension system used in an automobile.
- Identify the trailing arm suspension (Fig 1 & 2).

Fig 1

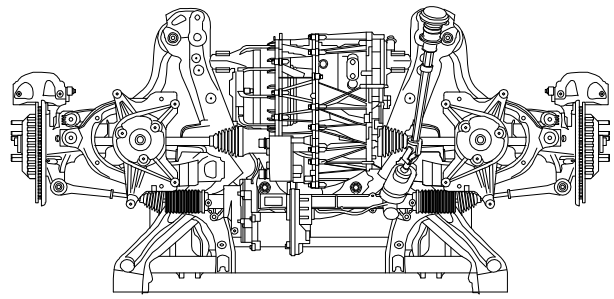

Fig 2

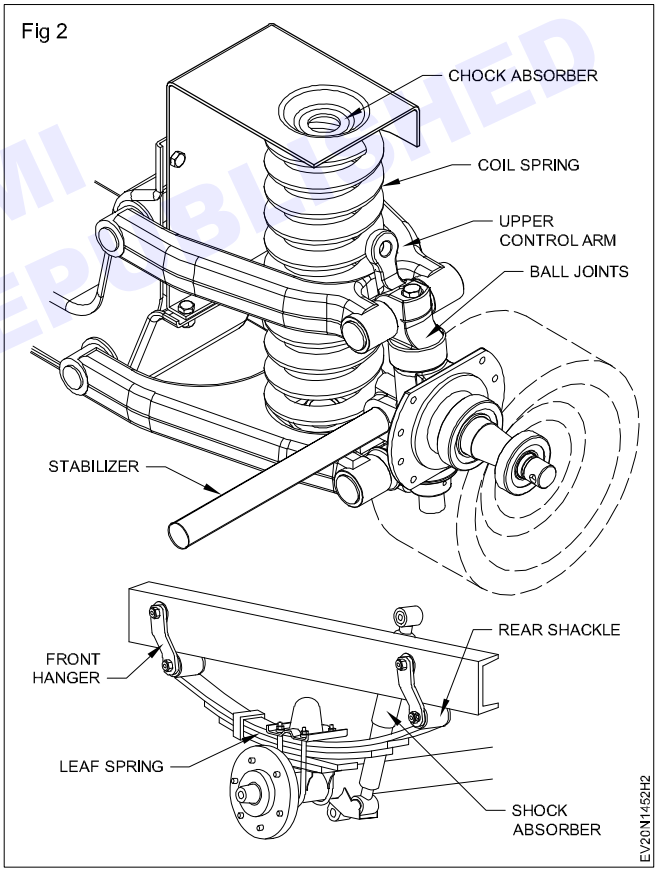

- Identify the independent suspension (Fig 1).
- Identify the double wish bone arm suspension system(Fig 1).
- Identify the shock absorber suspension system (Fig 2, 3, 4).
- Identify the compression shear spring and compression spring type suspension (Fig 2 & 5).
- Identify the air suspension system (Wheel air).

© NIMI NOT TO BE REPUBLISHED

Fig 3

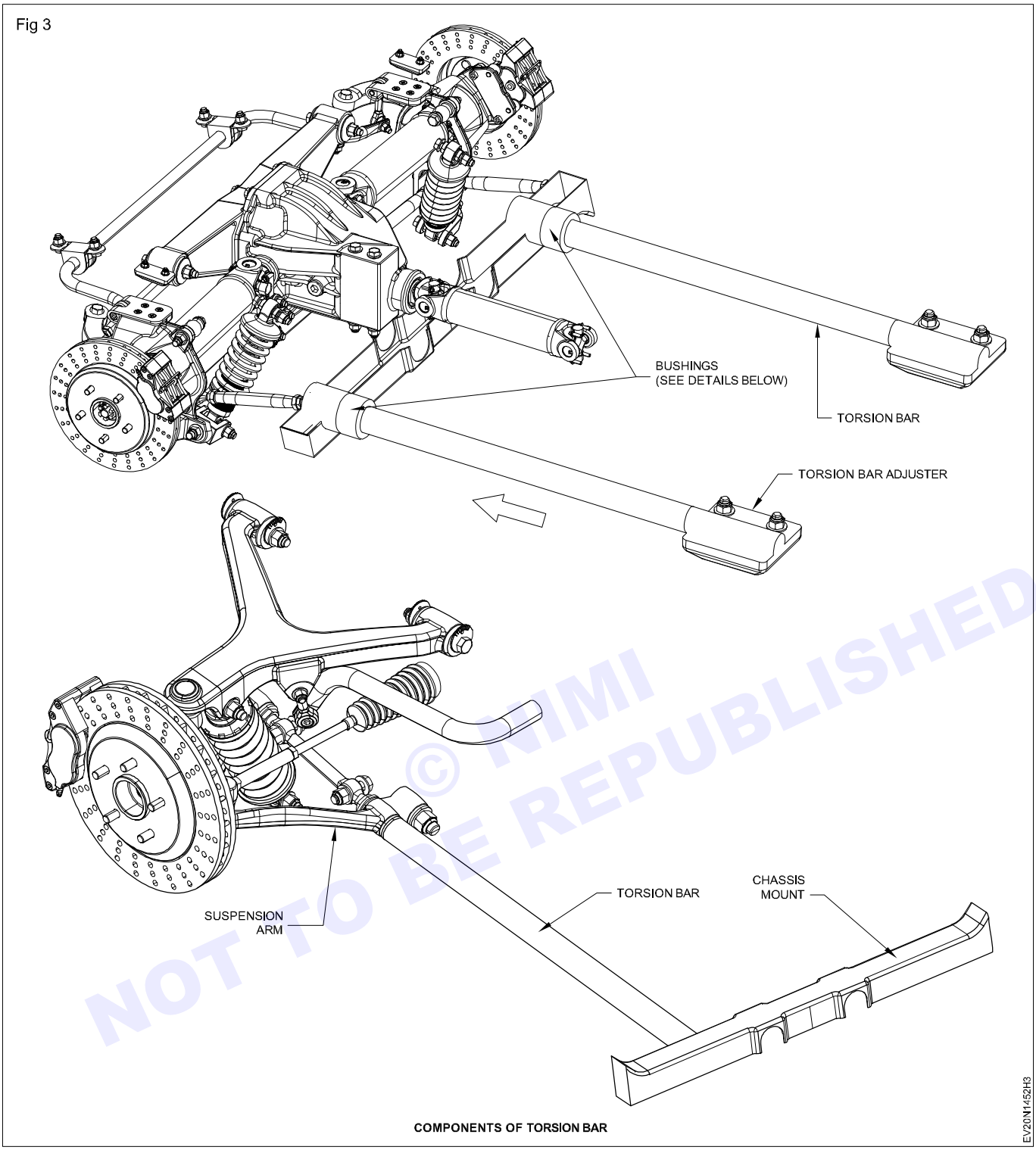

COMPONENTS OF TORSION BAR

© NIMI
NOT TO BE REPUBLISHED

- Identify the hydro electric suspension.(Fig 1).
- Identify the stabilizer bar suspension (Fig 2).
- Identify the coil spring rubber spring, torsion bar etc.(Fig.3).
- Identify the characteristics of all suspension components.
- Identify the swinging half axle type (Fig 2).
- Identify the Mac-person strut type (Fig 2).
- Note down the suspension components of E.V in Table -1.
- Check it with your instructor.

— — — — — —

Table- 1

S. No.	Suspension components	Vehicle type	Functions of components	Remarks
1	Coil spring			
2	Shock absorber			
3	Rubber spring			
4	Torsion bar			
5	Leaf spring			
6	Ball joints			
7	Suspension arm			
8	Stabllizer			
9	Wisborn arm			

Fig 4

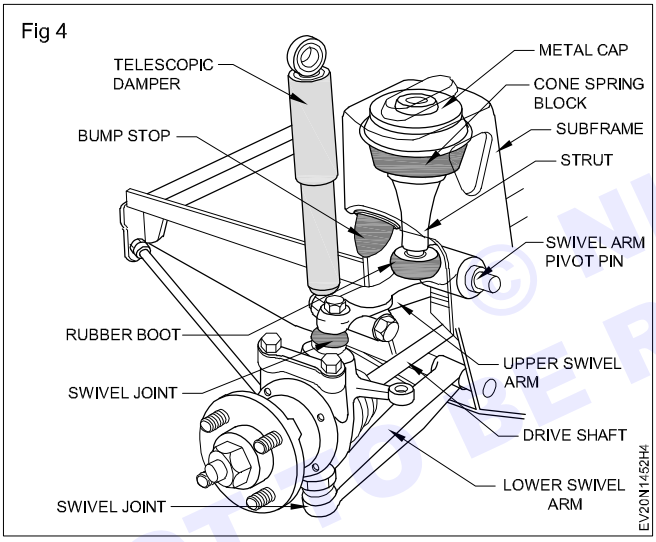

Fig 5

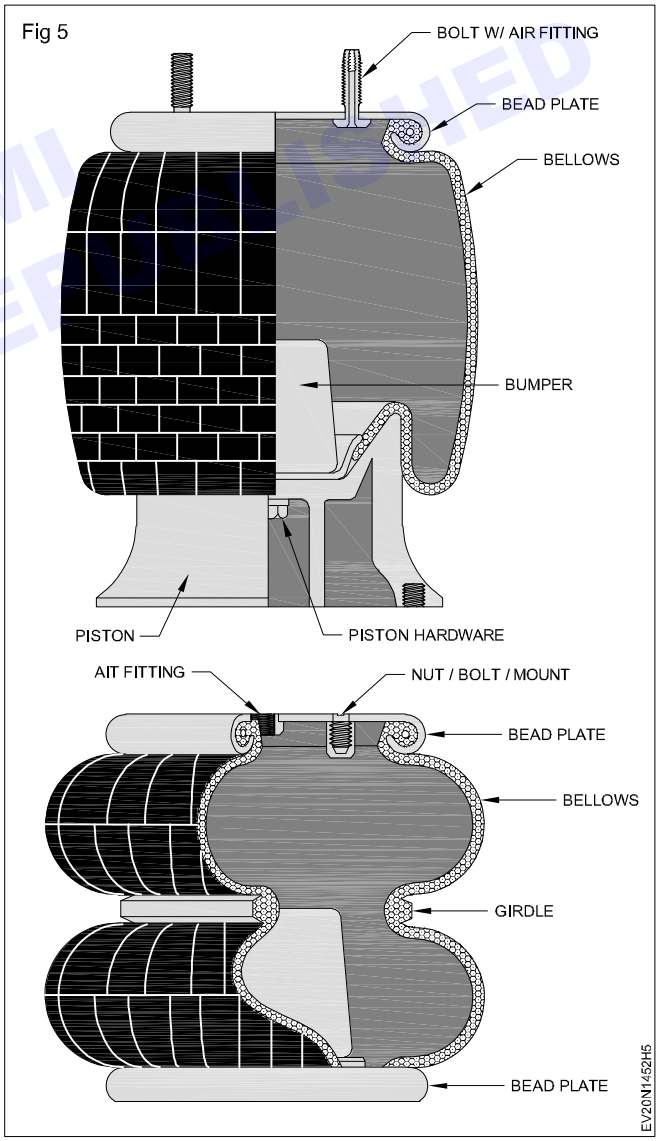

© NIMI NOT TO BE REPUBLISHED

— — — — — —

Practice on indentify the disc and drum brake components

Objectives: At the end of this exercise you shall be able to
- **identify the drum brake components and their functions**
- **identify the disc brake components and their functions.**

Requirements

Tools / Instruments

- Trainee's tool kit - 1 Set.
- Vehicle service manual - 1 No.

Equipments / Machineries

- Electric vehicle - 1 No.

Materials

- Cotton waste - as reqd.
- Soap oil - as reqd.
- Brake fluid - as reqd.

PROCEDURE

TASK 1: **Identifying the disc and drum brake components**

Note : The instructor has to be demonstrate the disc and drum brake components and explain about brake components function while applying brake on running vehicle

Fig 1

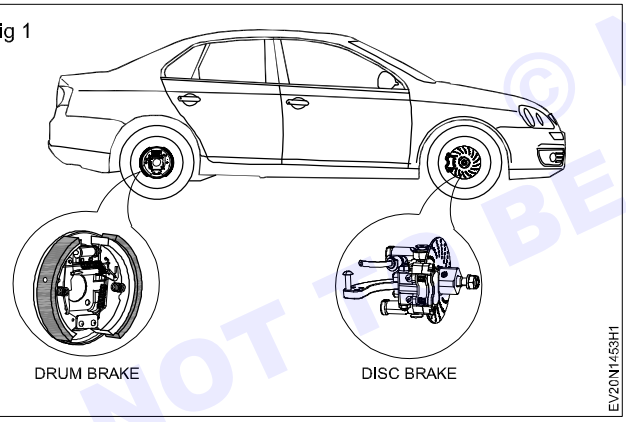

- Select the drum and disc brake vehicle.
- Park the vehicle on the shop floor and apply parking brake to prevent the vehicle move.
- Study the vehicle brake system along with vehicle brake circuit system.
- Trace the brake system of vehicle as shown in Fig.1.
- Identify the parts of hydraulic drum brake system as shown in the Fig 2,5.
- Identify the parts of disc brake system (Fig 5).
- Identify the parts of electric two wheeler drum brake as shown in the Fig 3
- Write the components name and their function of drum and disc brake in table -1

© NIMI NOT TO BE REPUBLISHED

Fig 2

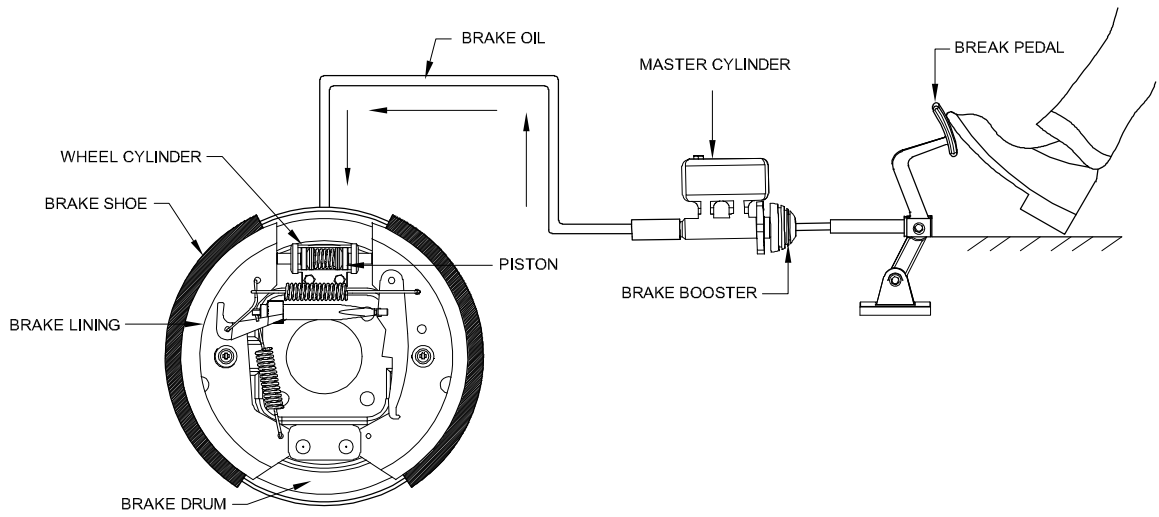

xxxxxxxxx

Fig 3

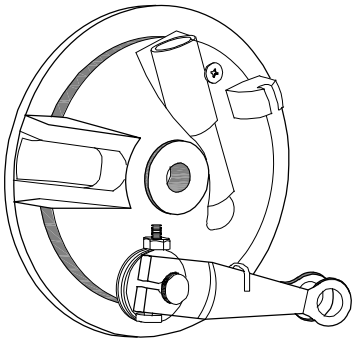

EV20N1453H3

Fig 4

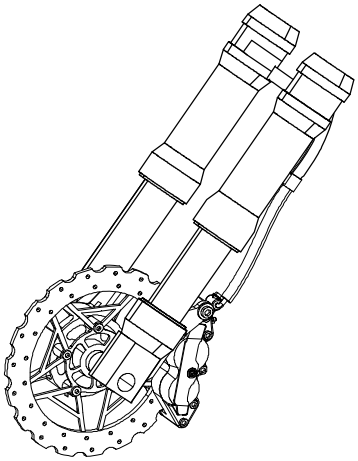

EV20N1453H4

Fig 5

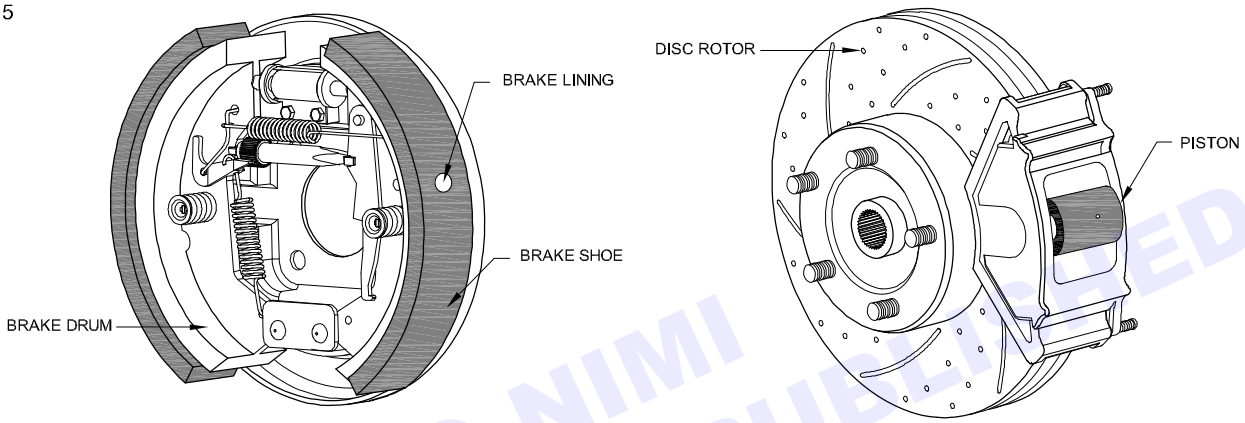

EV20N1453H5

© NIMI NOT TO BE REPUBLISHED

Table - 1

S. No.	Name of the component	Function of the component	Type of brake
1	Master cylinder		
2	Brake pedal		
3	Brake drum		
4	Piston(master cylinder)		
5	Wheel cylinder		
6	Brake shoe		
7	Brake lining		
8	Wheel cylinder piston		
9	Bleeding screw		
10	Disc		
11	Calliper unit		
12	Brake pads		
13	Brake fluid		
14	Brake line		

Note: Drum brake shoes press on the inter surface of the drum and press outward against rotating cylinder shaped part. The disc brake callipers to squeeze pairs of pads against a disc to order to create friction that retards the rotation speed.

— — — — — —

TASK 2: **Electric vehicle brake warning and safety devices**

- Ensure the brake light is glowing at the time of brake apply.
- If dash board brake failure warning light is glowing immediately stop the vehicle and service the brake.
- Ensure there is no grinding noise while driving vehicle.
- Ensure there no vibration during brake apply.
- Ensure there is no fluid leaking in brake line fluid leaks lead to accident.
- Ensure the brake is spongy or soft pedal before moving the vehicle, incase brake spongy, bleed the system.
- Ensure there is no burning smell while driving a vehicle.
- Ensure there is no car pulling to one side, in case of pulling the vehicle adjust all wheel brake shoe and drum clearance.
- Check the braking distance, if vehicle take long distance, service the brake system.

— — — — — —

© NIMI
NOT TO BE REPUBLISHED

Practice to measure a wheelbase of a vehicle

Objective: At the end of this exercise you shall be able to
- **measure the wheelbase of a vehicle with measuring tape.**

Requirements

Tools / Instruments
- Trainee's tool kit - 1 No.
- Measuring tape and plumb bob - 1 No each.

Equipments
- Vehicle - 1 No.

Materials
- Cotton waste - as reqd.

PROCEDURE

1 Place the vehicle on a plain ground (Fig 1)

Fig 1

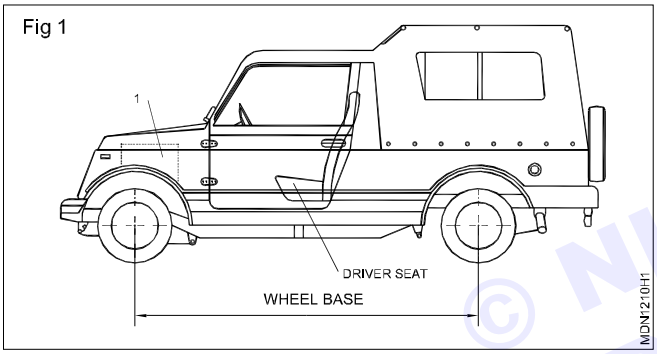

2 Make the wheels straight ahead

3 Apply the vehicle hand brake

4 Apply wheel chokes on front and rear wheels

5 Close all the doors

6 Use the plumb bob and mark the vehicle front wheel centre (from the side view of vehicle) on the ground. (Fig 2)

Fig 2

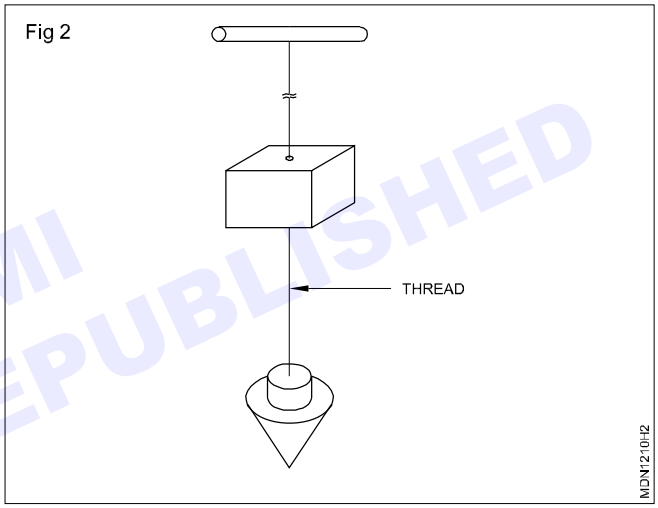

7 Similarly mark the vehicle rear wheel centre (from the same side view of the vehicle) on the ground

8 Measure the wheel base using measuring tape between the two markings

© NIMI NOT TO BE REPUBLISHED

Skill sequence

Practice on use of tape and plumb bob

Objective: This shall help you to
- **measure wheel base front overhang and rear overhang.**

Select the correct measurement tape (Fig 4)

Select the proper length of measuring tape

Release the lock of the tape & pull it out for measurement

Front end of the tape should be coincide with the centre mark line on the ground

Keep the tape straight till the other end of the marked line

Note down the measurement line of the tape coincide with the marked line on the ground

Take the measurement & check with the manufacturer's specified wheel base data. (Fig 5)

Measure the distance between centre of front wheel so center of rear wheel, which wheels are in straight ahead position. This is wheel base. (Fig 3)

Measure the distance between center of from LH tyre to center of front RH tyre. This is wheel track. (Fig 3)

Measure the distance between center of front wheel to the farthest point of the vehicle in front direction. This is front overhang. Measure the distance between center of rear wheel to the farthest point in the rear (normally rear bumper). This is rear overhang. (Fig 3)

Fig 4

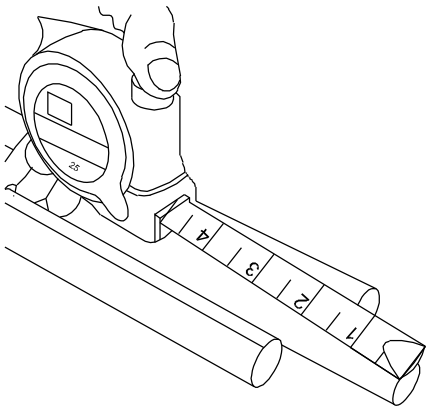

Fig 5

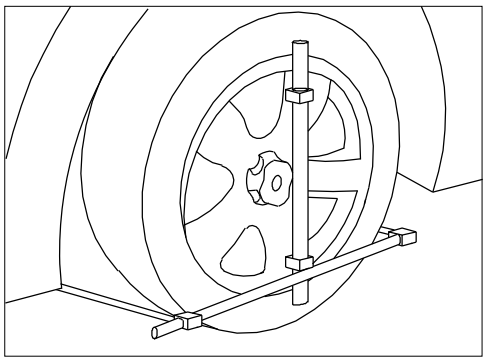

Fig 3

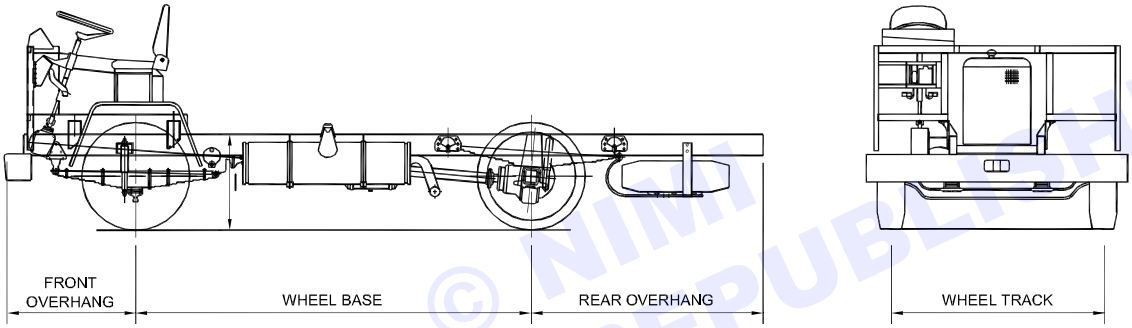

© NIMI NOT TO BE REPUBLISHED

Practice on removing wheel lug nuts

Objectives: At the end of this exercise you shall be able to
- **handle an air impact wrench**
- **loosen and tighten wheel nuts**
- **set the required torque.**

Requirements

Tools / Instruments

- Trainee's tool kit - 1 No.
- Air impact wrench - 1 set.

Equipments

- Vehicle - 1 No.
- Air Compressor unit - 1 No.

Materials

- Cotton waste - as reqd.
- Wheel nut - as reqd.

PROCEDURE

1 Park the vehicle on level ground.

2 Apply Hand Brake.

3 Close all the doors.

4 Put wheel chocks to all the wheels.

5 Remove the wheel cap.

6 Check the Air impact wrench is connected to the Air lines.

7 Select correct size of socket/special socket for wheel lug nut which can with-stand sudden impact force (six point Impact Socket).

8 Fit the socket on the Air-impact wrench. (Fig 1)

Fig 1

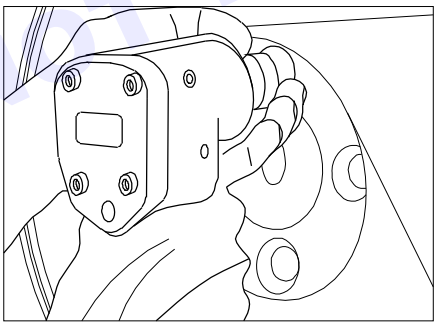

9 Set the direction of spin forward or backward with the help of wrench lever.

10 Set the torque by turning the valve to increase or decrease.

11 Insert impact socket on the wheel lug nut.

12 Trigger the switch of the impact wrench to loosen and remove the wheel lug nuts.

13 After removing all wheel nuts, place one or two nuts on the wheel bolt to avoid slipping of the wheel while jackup the vehicle for wheel removing.

Do not use an Impact wrench to tighten the wheel lug nuts

Wear ear protection device such as ear muffs and ear plugs

Wear safety glasses for eye protection

Apply a few drops of oil to inlet of the air impact wrench before using

Ensure there is no air-leakage on the line and adequate air pressure is available.

© NIMI NOT TO BE REPUBLISHED

Practice on handling the general workshop hand and power tools

Objectives: At the end of this exercise you shall be able to
- **identify screw driver for specific purpose and handle it**
- **identify spanner and wrenches for specific purpose and handle it**
- **identify pliers for specific purpose and handle it**
- **tightening locking devices**
- **make flare joints and fittings**
- **select the puller for removing gear and bearing from shaft.**

Requirements

Tools / Instruments

- Trainee's tool kit - 1 No.
- Screw driver - 1 Set.
- Ring and D/E spanners - 1 Set.
- Pliers - 1 Set.

Equipments

- Pullers - 1 No.
- Air compressor - 1 No.
- Car washer - 1 No.
- Jack mechanical and hydraulic - 1 No.
- Hydraulic press - 1 No.
- Flaring equipments - 1 No.

Materials

- Kerosene - as reqd.
- Cotton waste - as reqd.
- Pipe - as reqd.
- Steel wire - as reqd.

PROCEDURE

TASK 1 : **Identify the screw driver for specific purpose**

Checking the condition of the fastener to be removed

1 Clean the surface of the fastener to be removed by using kerosene, of banian cloth.

2 Check the cornering faces of the fastener for any wear or damage.

3 If it is found good, then proceed as follows

4 Select the correct size screwdriver to suit the screw slot. (Fig 1)

Fig 1

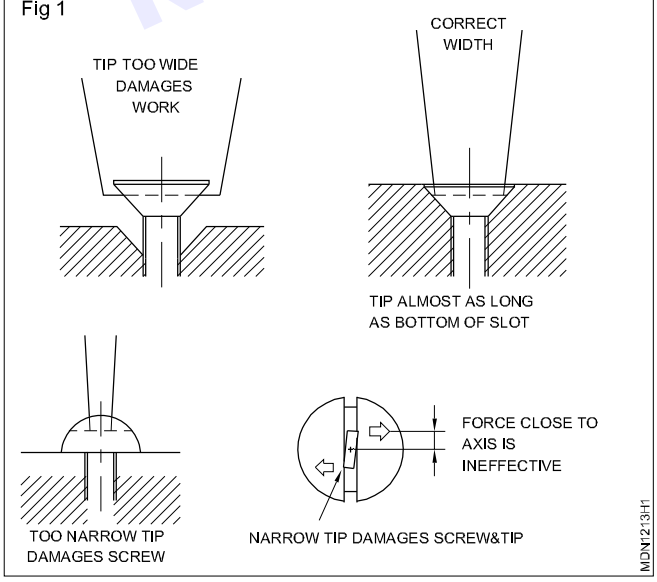

5 Select the longest suitable screwdriver with that size of tip. (Fig 2)

Make sure your hands and the handle are dry and not greasy.

Fig 2

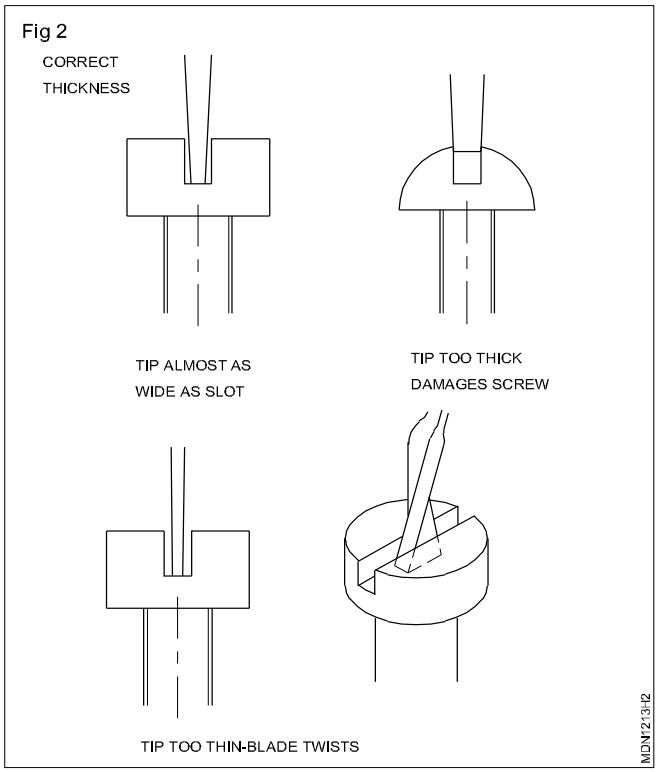

© NIMI NOT TO BE REPUBLISHED

6 Hold the screwdriver with its axis in line with the axis of the screw.

7 Guide the blade with the left hand. Apply a little pressure with the right hand to keep the tip in the slot. (Fig 3)

Fig 3

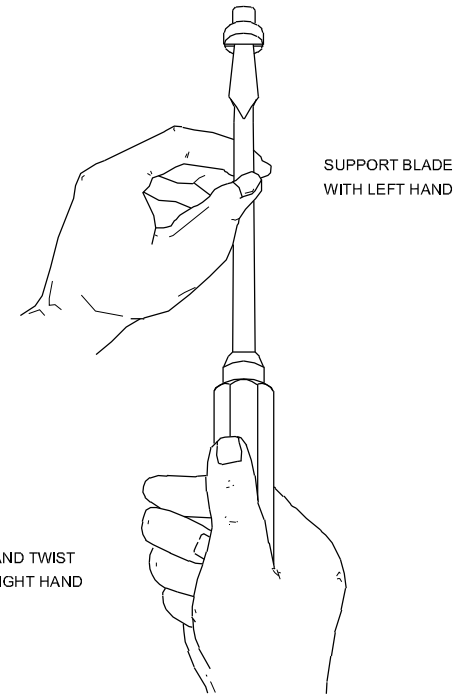

8 Twist firmly and steadily.

Keep the tip centered in the slot and the axis of the blade in line with the axis of the screw.

Always brace small works against the bench or other firm support before using a screw driver.

Never hold a small work in your hand while using a screw driver.

9 Turn large screws, use a screwdriver with a square blade. Apply extra twisting force with the aid of a close fitting spanner. (Fig. 4)

Never use pliers or toothed wrenches to apply twisting force to a screwdriver.

10 A Standard screwdriver blade should be ground to 9° so that the faces will be almost parallel with the sides of the screw slot. The end of the blade should be made as thick as the slot in the screw will permit.

Do not grind the blade to a chisel point, as it has a tendency to slip out of the screw slot.

11 Grind the width on both sides to an angle of 11°. The width should be equal to the diameter of the head.

Never grind screwdrivers on a silicon carbide grinding wheel.

Fig 4

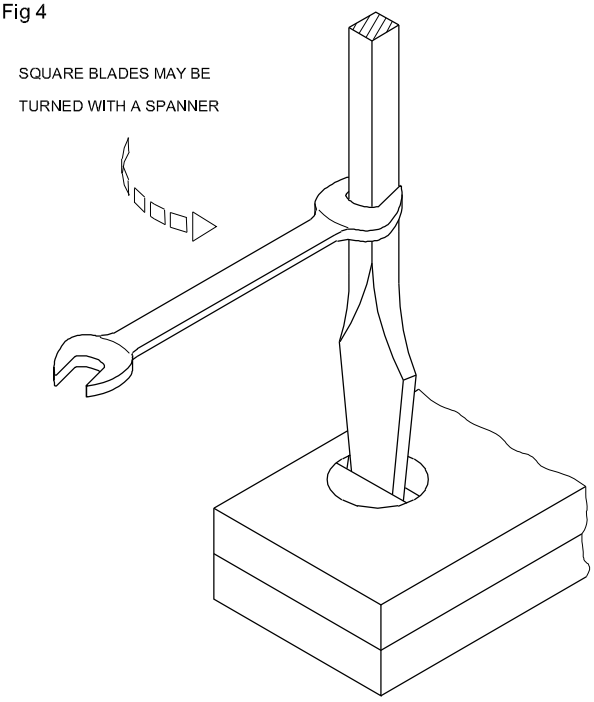

Standard screwdrivers (Fig 5) can be dressed by filing if they are worn out. Begin filing on the end of the tip. After dressing, the tip must be symmetrical about the axis of the blade. All corners must be square. The end must be at right angles to the axis in both planes.

Fig 5

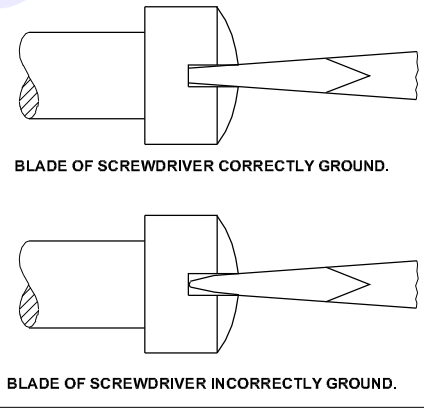

12 Use offset screw driver (Fig 6) in a restricted place.

13 Reverse the screwdriver after one end to get on quarter turn on .

14 Use the other end to get the next quarter turn and so on.

Fig 6

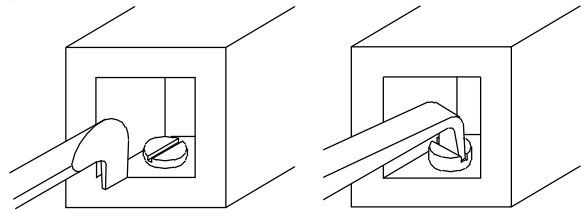

© NIMI NOT TO BE REPUBLISHED

Keep pressing the tip into the slot as you turn.

15 Use ratchet screwdriver (Fig 7) for quick turning.

16 Keep the left hand on knurling, right hand on the ratchet head.

Fig 7

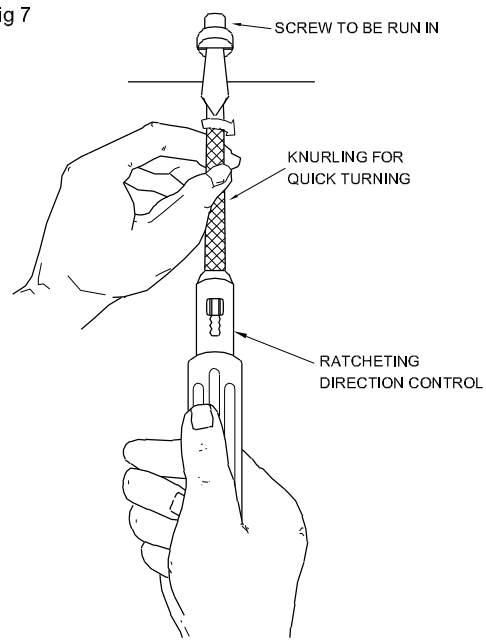

RATCHET SCREWDRIVER

Change the direction of control depending on your movement.

Phillips (cross-recess) screwdrivers (Figs 8 &9)

Fig 8

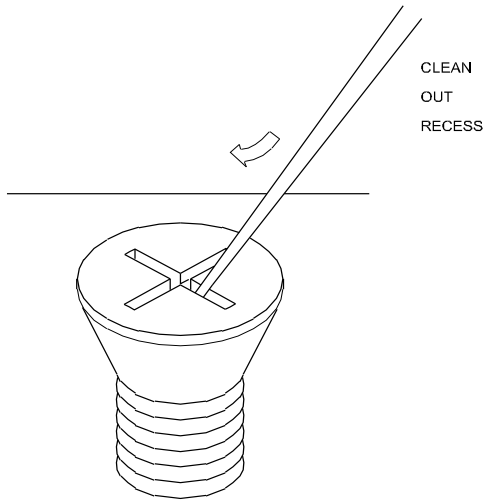

Fig 9

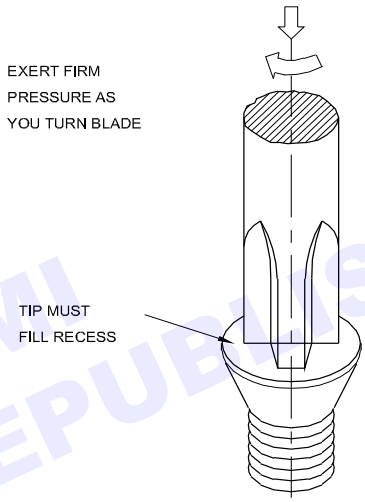

AXES OF SCREW AND THE SCREW DRIVER BE IN LINE

© NIMI NOT TO BE REPUBLISHED

— — — — — — —

TASK 2 : **Identify spanner & wrenches for specific purpose**

Identifying the correct size of the tool

1 Determine the distance across the flats of a nut or bolt to be removed. (Fig 1)

Fig 1

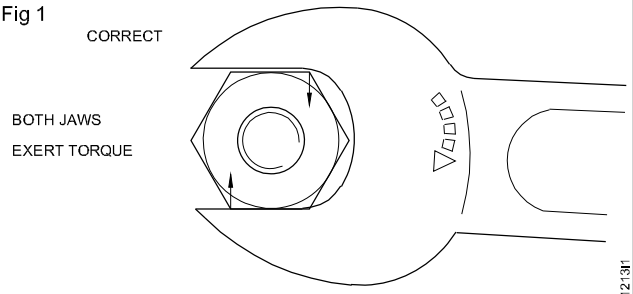

JAWS THRUST FULLY ON TO NUT

2 Decide the size of the spanner.

3 Choose the spanner that allows sufficient room without excess clearance for use. (Fig 2)

Fig 2

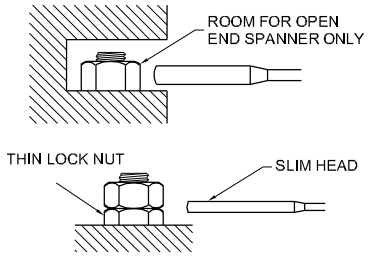

Handling the Tool excess clearance will cause slipping of spanner & fasteners corners gets damaged.

4 Select the correct size of the socket. (Fig 3)

5 Take a sliding offset handle and insert the drive attachment with square driving ends of a socket.

Fig 3

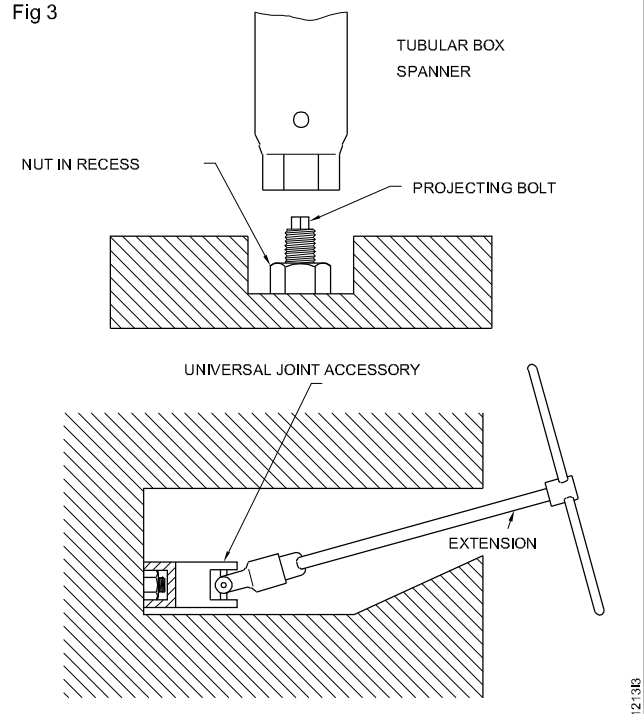

SLIDING "T" HANDLE SOCKET SPANNER

6 Insert the socket wrench on the bolt or nut and confirm whether it inserts fully.

7 Keep the position of the handle perpendicular to your forearm which enables you maximum leverage.

8 Pull the socket handle and drive out the nut/bolt head.

If the socket wrench is not usable for that particular fastener, then use ring spanner. (Fig 4)

Fig 4

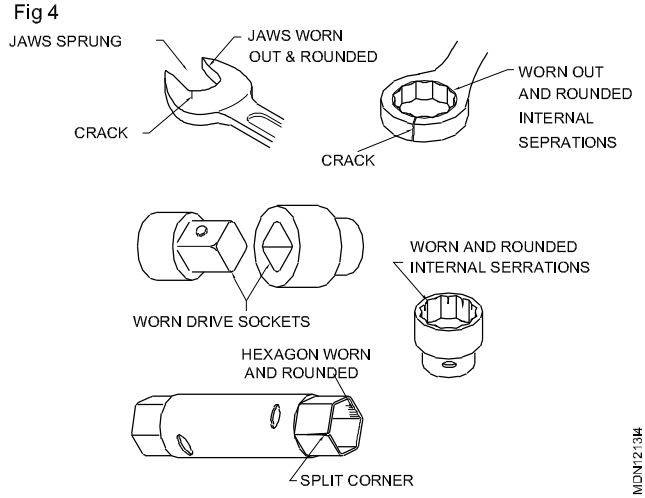

9 Insert the ring spanner on the bolt or nut.

10 Keep the position of the shank perpendicular to your forearms which enables you maximum leverage.

11 Use D.E. Spanner where ring spanner is not suitable.

Always try to pull the spanner.

If you are forced to push the spanner, use the base of your hand and keep your hand open.

Use both hands for large spanner.

Keep yourself balanced and firm to avoid slipping.

© NIMI NOT TO BE REPUBLISHED

— — — — — — —

TASK 3 : **Handling of Plier**

1 Select a component with lock wire to nut, which is to be removed.

2 Use the combination plier flat grip for untwist the lock wire.

3 After untwisting, pull the lock wire from the nut.

4 Remove the nut with proper spanner.

5 Select a brake pipe line to be removed from a junction.

6 Hold the brake pipe line with serrated pipe grip portion at combination pliers. (Fig 1)

7 Select proper size of proper double open end spanner & remove the union nut.

8 Select a 3 mm electrical wire to be cut.

9 Place the wire between joint cutters at the point which is to be cut. (Fig 2)

10 Press the handle to cut the wires.

11 Select a steel wire to be cut. (Fig 3)

Fig 1

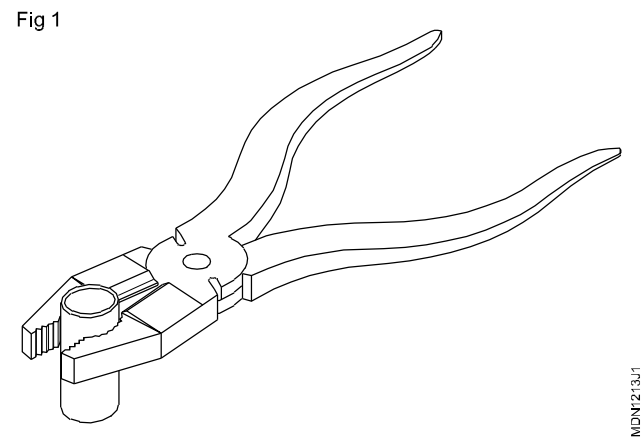

12 Place the steel wire in between side cutter.

13 Press the handle to cut the wire.

14 Select a nut with tab washer to be removed.

15 Unfold the tab washer with help of flat nose pliers. (Fig 4)

Fig 2

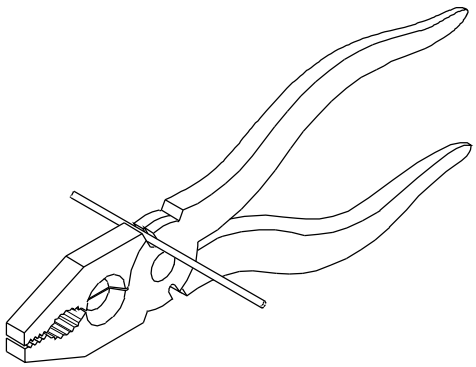

Fig 3

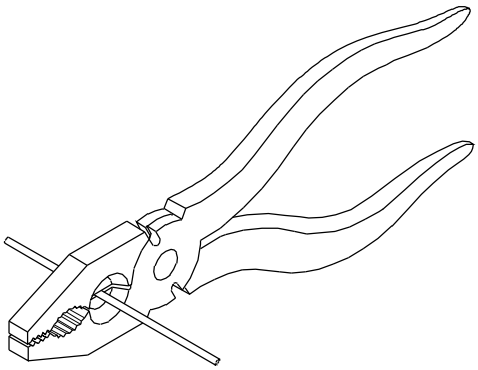

Fig 4

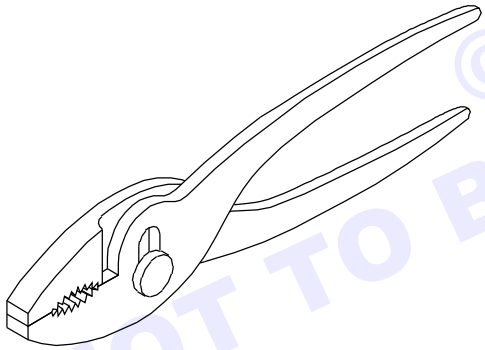

16 Use a proper spanner to remove the nut.

17 Select a cylindrical component with nut.

18 Hold the cylindrical shaft with help of slip joint pliers jaws. (Fig 5)

Fig 5

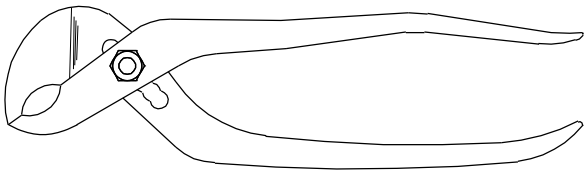

19 Remove the nut with proper spanner.

20 Select a wire to be trimmed.

21 Place the end of the wire to be trimmed by end cutting plier in between the cutting end. (Fig 6)

Fig 6

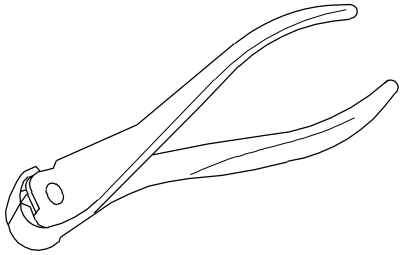

22 Apply pressure on handles to cut the wire.

23 Select the steel wire to be cut close to the component surface.

24 Cut the steel wire by slip joint multi gripplier applying pressure on the handles.

25 Use the cutting pliers to spread the cotter pin.

26 Select a stead with lock nut, from which lock nut has to be removed.

27 Hold the stead by locking pliers adjusting the screw in the handle lock with lever.

28 Use a proper spanner to remove the locking nut.

29 Select a wire which has to be converted into loop.

30 Hold the wire between the jaws. (Fig 7)

Fig 7

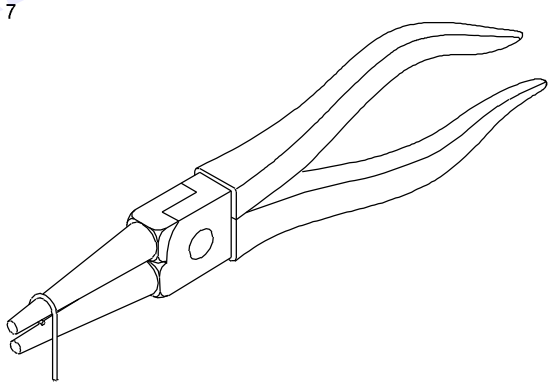

21 Form a loop by tuning the round nose pliers.

© NIMI NOT TO BE REPUBLISHED

Skill Sequence

Tightening locking devices

Objective: This shall help you to
- **use different types of locking devices correctly.**

Split pin (Fig 1)

Tighten the nut (1) at the specified torque.

Check the bolt's (2) holes and nut's (1) slot alignment, if not aligned, align the hole by tightening the nut (1) slightly.

Insert a new suitable split pin (3) in the slot and hole. So that the loop on vertical plane.

Drive the split pin (3) fully inside with the help of a copper drift or rod and hammer.

Fig 1

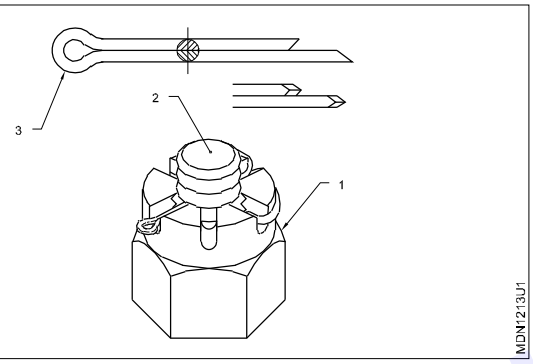

Spread open the long side of the split pin and bend it on the nut.

Inside circlip or snap ring (Fig 2)

Hold an internal circlip on hole face (1) with the help of an internal circlip plier (2).

Press the circlip (1) with the help of the plier (2) so that its diameter will be smaller than the hole diameter.

Fig 2

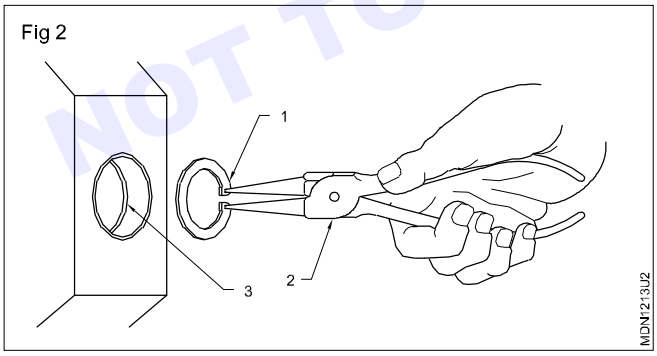

In this position insert the circlip in such a manner that it will sit squarely in the groove (3).

Take out the plier (2) after checking rotation of clip.

Outside circlip or snapping (Fig 3)

Hold an outside circlip shaft end (1) with the help of an external circlip plier (2).

Press the external circlip plier (2) so that the circlip (1) will enlarge in diameter.

While sliding, set it in the shaft groove (3). Ensure that the circlip sits squarely in groove (3) and rotate freely.

Take out the plier (2).

Fig 3

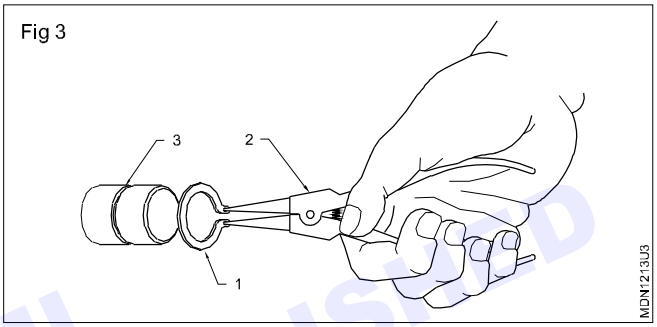

Wire ring hose clamp (Fig 4)

Clean the outside surface where the hose-pipe is to be set.

Apply grease inside the starting end surface for easy insertion.

Set the wier spring hose clamp (1) on the hose-pipe (2).

Slide the hose-pipe (2) on the metal pipe (3).

Press the hose clamp (1) with the help of a plier (4) and slide it on the joint of the hose-pipe (2) and metal pipe (3).

Take out the plier (4)

Fig 4

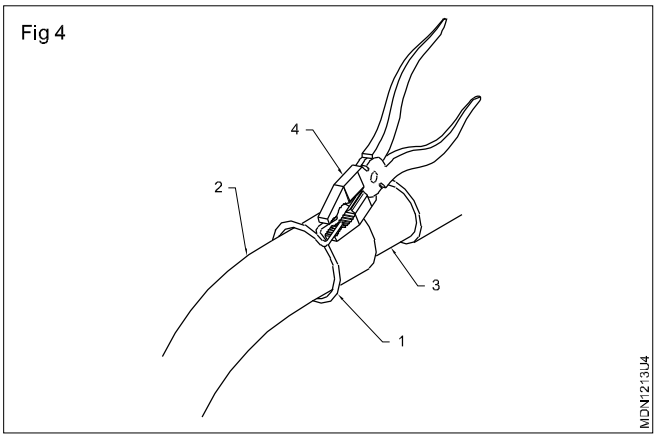

© NIMI NOT TO BE REPUBLISHED

Handling of pipe flaring and cutting tools

Objective: This shall help you to
- **cut a G.I pipe using a pipe cutter.**

Measure the required length of pipe and mark it with chalk.

Keep the pipe in the pipe vice and tighten it. (Fig 1)

Fig 1

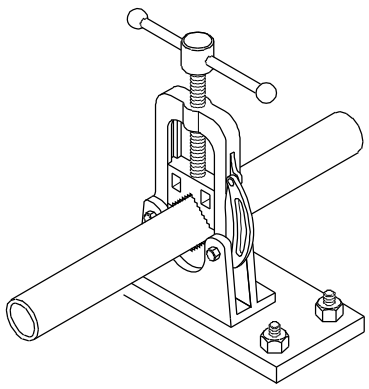

Fit the pipe cutter on the G.I. pipe (on the scribed line) and tighten the jacking screw so that the cutting wheel is touching the pipe. (Fig 2)

Fig 2

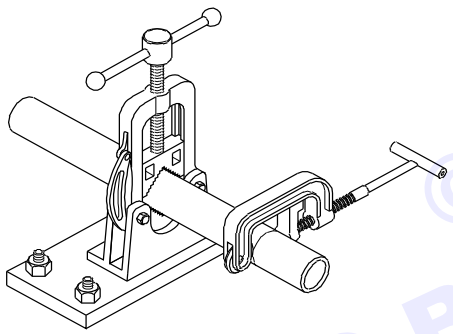

Ensure that the pipe is kept horizontal and parallel to the serrations such that the marking is visible at the top.

Rotate one or two turns to ensure that the cutting wheel is sitting exactly on the scribed line at 90° to the pipe. (Fig 3)

Fig 3

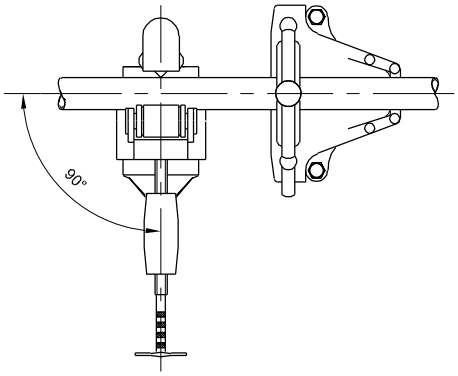

Rotate the pipe cutter around the pipe. (Fig 4)

Fig 4

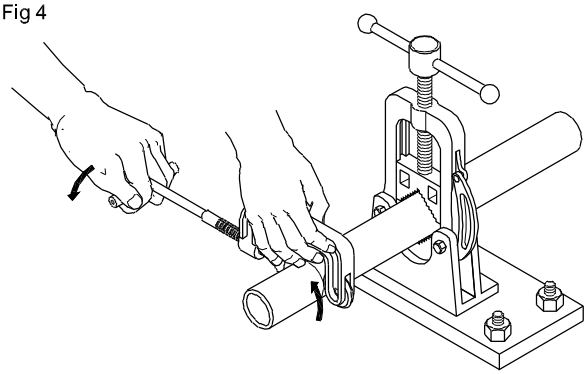

After two or three turns use the jacking screw to apply pressure on the cutting wheel. (Fig 5)

Fig 5

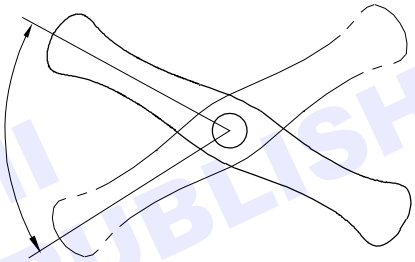

Keep rotating the pipe cutter around the pipe. Increase the pressure to the cutter by repeating the cycle until the pipe is cut through. (Fig 6)

Fig 6

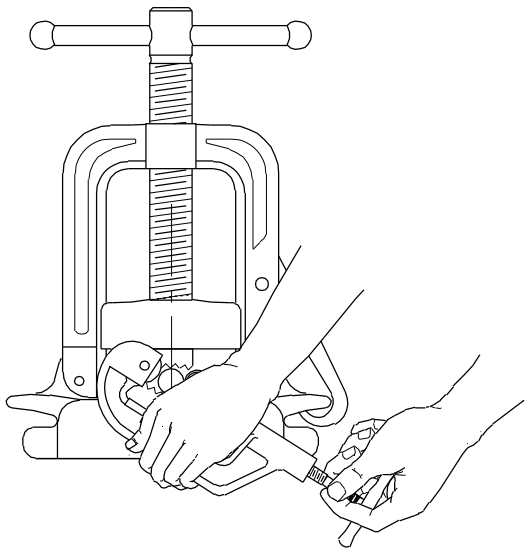

Support the pipe with your left hand so that the free end of the pipe does not fall. (Fig 7)

© NIMI NOT TO BE REPUBLISHED

Fig 7

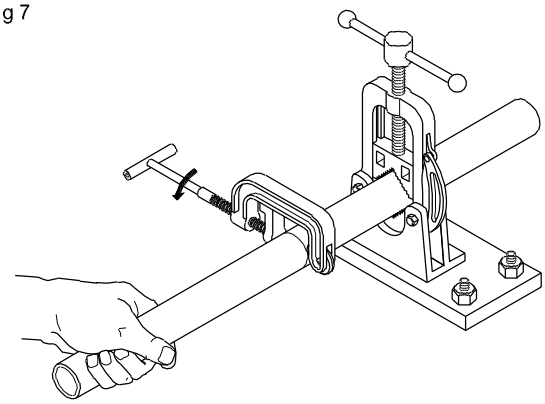

MDN1213X7

The cut portion of the pipe will appear as shown in Fig 8.

Fig 8

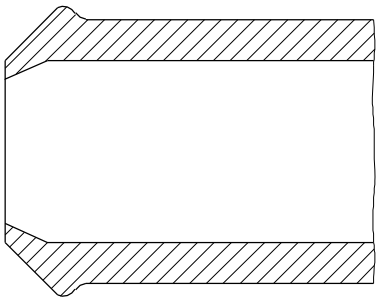

MDN1213X8

Remove burrs using a pipe reamer. (Fig 9)

Fig 9

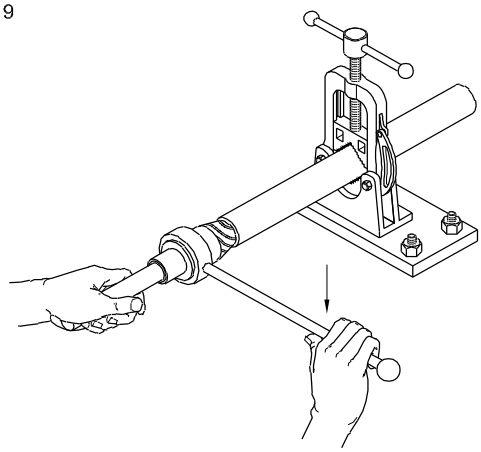

MDN1213X9

Check that the pipe ends are square. (Fig 10)

Fig 10

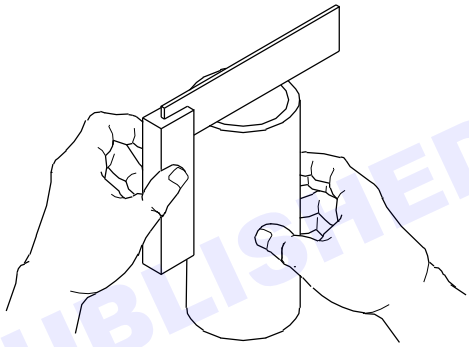

MDN1213XA

© NIMI NOT TO BE REPUBLISHED

Make flare joints and test them with flare fittings

Objectives: This shall help you to
- **flare the end of pipe**
- **joint flare nut with flare fitting and test it.**

Flaring

Brake line pipes / Fuel pipe lines / Air conditioner pipe lines are sometimes jointed to fittings by making a flared connection.

The end of the pipe is opened out to form a cone (Fig 1).

Always place the special flare nut on the pipe first before flaring.

Fig 1

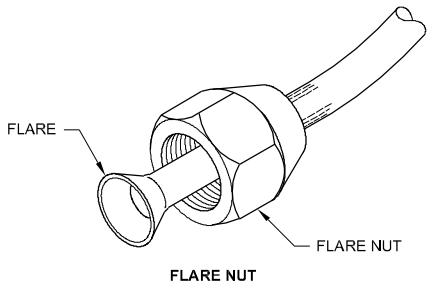

MDN1213Y1

Examine the pipe flaring tool. Make sure that you understand how it works before starting to flare the end of a pipe.

Make sure that the end of the pipe is free of rough edges before flaring

Place the pipe in the tool (Fig 2). Make sure that you have.

a Place the flare nut on the pipe

b Choose the correct size hole in the flaring tool to fit hte pipe; (there are 5 holes to fit different sizes of pipe.)

If the pipe is 1/4 inch (6mm) in diameter, postition the pipe so that the end is at least 2 mm above the top of the flaring block (Fig 3). (This distance is calculated as “pipe diameter divided by 3”; i this case, 6mm divided by 3= 2 mm).

Tighten the nuts at each end of the flaring block (see drawing).

Fig 2

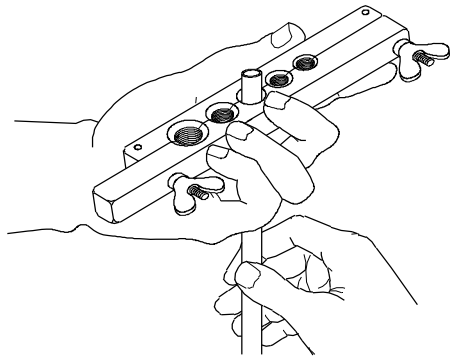

Fit the yoke to the flaring block (Fig 3)

Fig 3

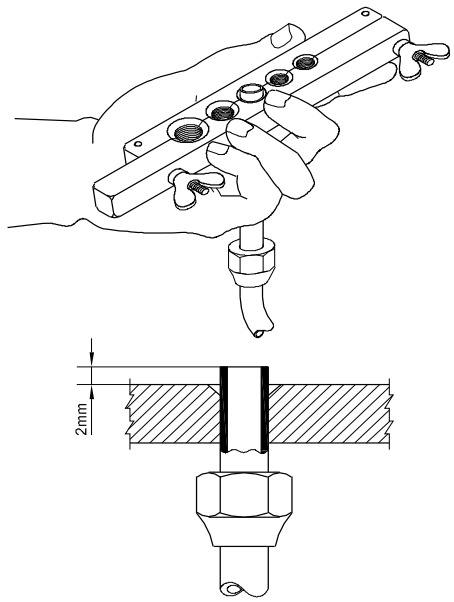

Oil the cone and slowly screw it into the end of the pipe.

The end of the pipe will be formed into a flare (Fig 4).

Fig 4

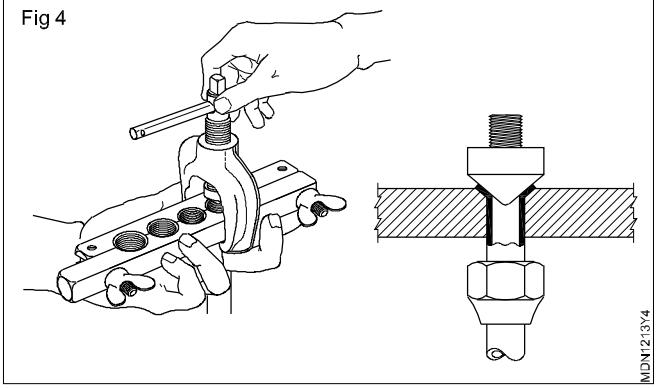

Unscrew & remove the flaring block remove the flared pipe from the block.

Examine the flare. If it has cracked, the cone was screwd down too quickly.

Make sure that the flare is the correct size. It should just fit inside the flare nut. If it is too loose, cut off the flare and start again

Use 3 mm instead of 2 mm. Repeat until the flare is the correct size for the flare nut - not too loose and not too tight.

© NIMI NOT TO BE REPUBLISHED

Observation Table 1

Sl. No.	Skills	Remarks
1	Checking flaring	Cracked/uneven/too small/too long/incorrect
2	Number of attempts	One/two/three
Note : Repate the steps to the sizes of copper tube		

Joining with flare fittings

Put thread seal tape on the thread

Push back the flare nut and place the flared tube on the fitting, then tighten the flare nut using adjustable wrench or suitable double end spanner.

Tighten the one end of the tube to the cylinder with the flare nut. (Fig 5)

Connect a pressure gauge at the other end of the tube with flare nut.

Do not give more pressure while tightening since this will spoil flare.

Make sure that they should not be loose in the tube.

Fig 5

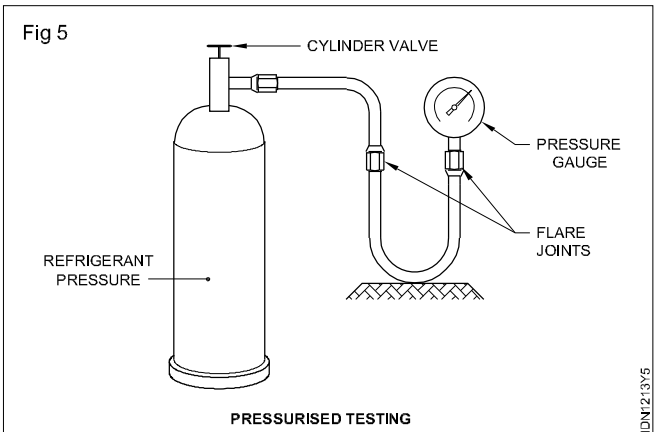

PRESSURISED TESTING

Observation Table 2

Sl. No.	Skills	Remarks
1	Selection of correct fittings	Correct/not correct
2	Joining method	Excellent/good/fair
3	Time taken	Less/very less/more

The pressure will be shown in the pressure gauge.

Then close the cylinder valve. Major leaks will make noise and that nut needs to be tightened.

If there is no leak, the pressure in the pressure gauge will remain constant.

If it decreases, check the joints with soap solution foam. Leak will bubble, then tight the joints. If it stands still then there is no leak.

Observation Table 3

Sl. No.	Skills	Remarks
1	Selection of tools	Excellent/Good/Average
2	Detecting leak and arresting	Excellent/Good/Average

Handling of puller, gear and bearing

Objectives: This shall help you to

- **select, install to use a puller for removing gear from shaft**
- **select install to use of puller for removing bearing from shaft.**

Identify the object to be removed, i.e. Gear / Bearing.

Determine the size of the Gear / Bearing to be removed.

Choose a puller according to Gear / Bearing i.e, 2 or 3 Jaw & External or Internal Jaw puller.

Unscrew the forcing screw of the puller to the optimum length.

Split open the jaw of the puller.

Position the jaws of the puller over gear as shown in the diagram. (Fig 1)

Fig 1

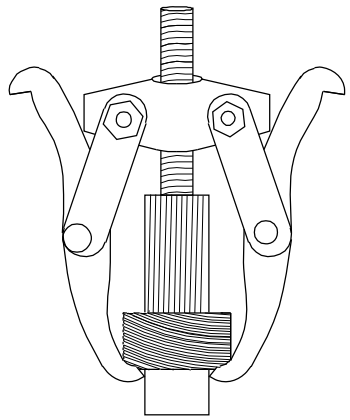

Position the tip of forcing screw on the shaft, as shown in the diagram. (Fig 2)

Tighten the forcing screw till the forcing screw end touches the shaft.

Check the puller is not going to slip of from the center of shaft & readjust if necessary.

Tighten the forcing screw till the gear comes all of the shaft.

Warnings

Always wear proper personal protective gear (i.e gloves, safety glasses)

Never use a tool to strike the puller. Hitting the puller may cause if to break.

Applying heat to the puller may damage it.

© NIMI NOT TO BE REPUBLISHED

Fig 2

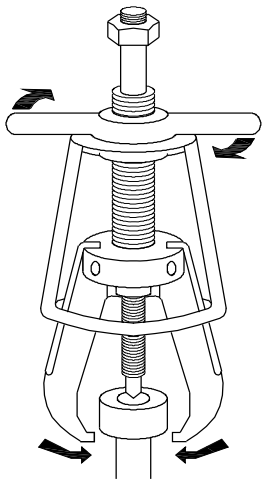

(A)

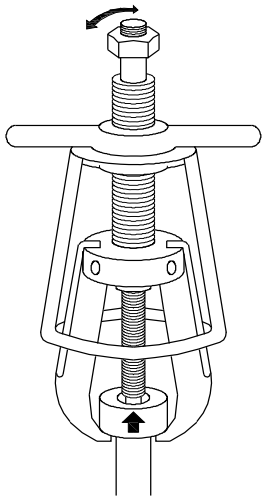

(B)

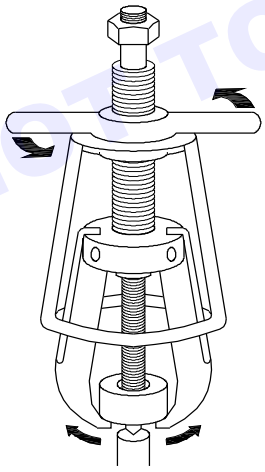

(C)

MDN121322

© NIMI
NOT TO BE REPUBLISHED

— — — — — — —

Check tyre air pressure

Objective: At the end of this exercise you shall be able to
- **check existing tyre pressure on a vehicle.**

Requirements

Tools/Instruments

- Trainee's tools kit - 1 No.
- Tyre pressure gauge - 1 No.
- Air pressure inflating unit - 1 No.
- Air valve remover - 1 No.

Equipments

- Running vehicle - 1 No.

Materials

- Cotton waste - as reqd.
- Air valve - as reqd.
- Valve cap - as reqd.

PROCEDURE

1 Remove valve cap / clean the valve externally.

2 Insert tyre pressure gauge & take the reading. (Fig 1)

3 Compare with the recommended pressure.

4 Check if tyre needs inflation or deflation.

5 If it is to be inflated, insert the air inflator & watch the tyre pressure reading in the gauge.

Fig 1

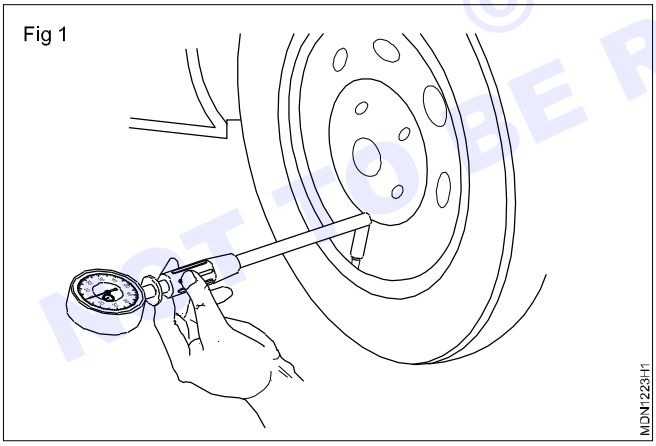

Some equipments have the facility to preset the air pressure. Once the preset pressure is achieved, it automatically drips.

6 Check if the air valve is leaking.

7 If there is no leak, replace the cap.

Caution

1 **Never check tyre pressure, when tyre is hot after a long run.**

2 **Ensure there is sufficient air in Air tank and free from contamination like water, oil, dust etc.**

© NIMI NOT TO BE REPUBLISHED

Practice on loosening and tightening of various screws, nuts and bolts

Objective: At the end of this exercise you shall be able to
- **loosening and tightening screws,nuts and bolts.**

Requirements

Tools/Instruments
- Trainee's tools kit - 1 Set.

Equipments
- work bench with vice - 1 No.

Materials
- Cotton waste - as reqd.
- Soap oil - as reqd.
- Assorted nut bolts - as reqd.

PROCEDURE

TASK 1 :**Loosening and tightening a screw, nut and bolts**

- Inspect the screws, nuts and bolts to be loosen or tighten
- Identify the type of screw or nut bolts or studs
- Identify the size of screw, nuts & bolts and studs
- Select suitable tools for loosening and tightening the screws, nuts and bolts

Note : The instructor has to show demo on loosening and tightening method of screw and nuts bolts, identification method of nut bolts size,screw size, tools selection method and tool grouping method.

- Use the correct size screw driver according size of screws slot cut length and width as shown in figure 1,2,3,4,5.
- Identify the suitable spanner and wrenches for specific purpose according the size of nut and bolts
- Use the spanner to loosen and tighten the nut bolts as shown in figure 6,7,8,9.

Make sure your hands and the handle are dry and not greasy.

Handling the tool excess clearance will cause slipping of spanner & fasteners corners gets damaged.

Always try to pull the spanner.

If you are forced to push the spanner, use the base of your hand and keep your hand open.

Use both hands for large spanner.

Fig 1

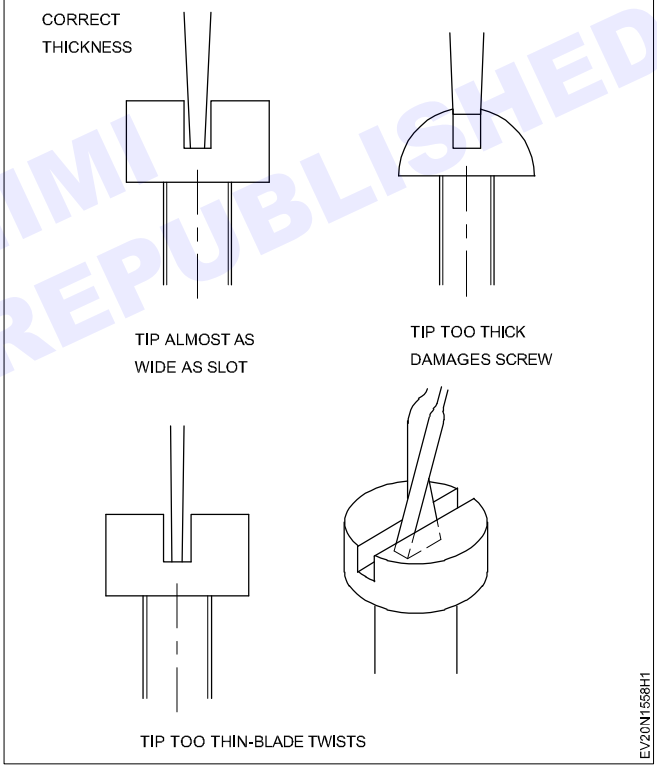

keep yourself balanced and firm to avoid slipping.

If the socket wrench is not usable for that particular fastener,then use ring spanner.

© NIMI NOT TO BE REPUBLISHED

Fig 2

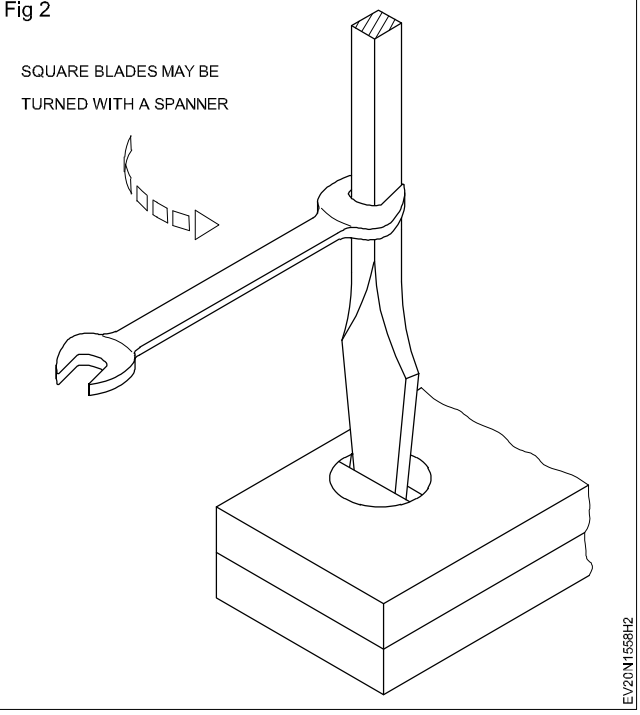

Fig 3

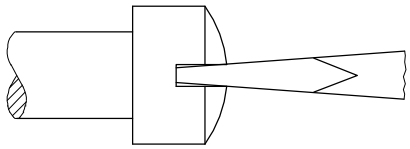

BLADE OF SCREWDRIVER CORRECTLY GROUND.

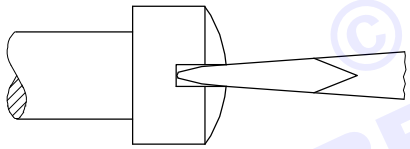

BLADE OF SCREWDRIVER INCORRECTLY GROUND.

EV20N1558H3

Fig 4

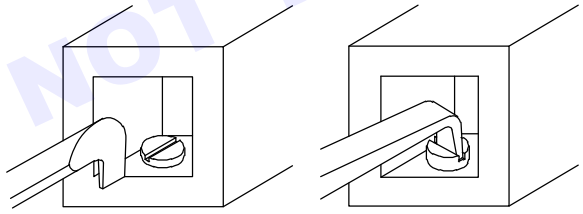

EV20N1558H4

Fig 5

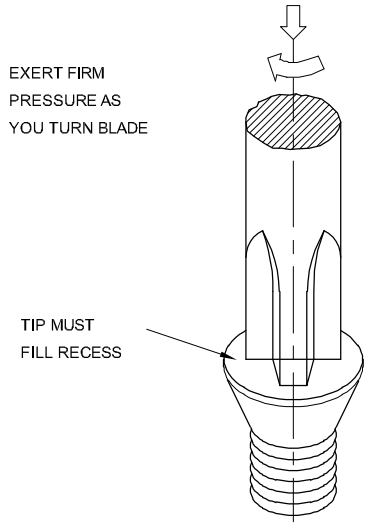

AXES OF SCREW AND THE SCREW DRIVER BE IN LINE

EV20N1558H5

Fig 6

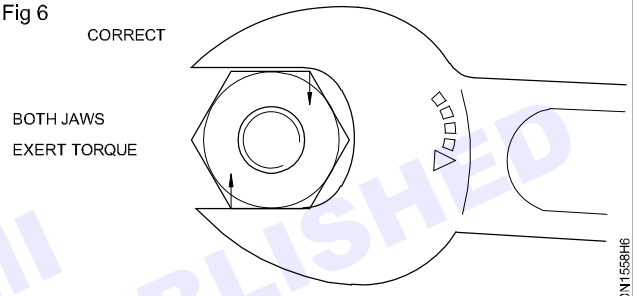

JAWS THRUST FULLY ON TO NUT

EV20N1558H6

Fig 7

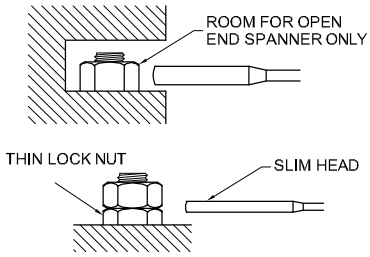

EV20N1558H7

© NIMI
NOT TO BE REPUBLISHED

Fig 8

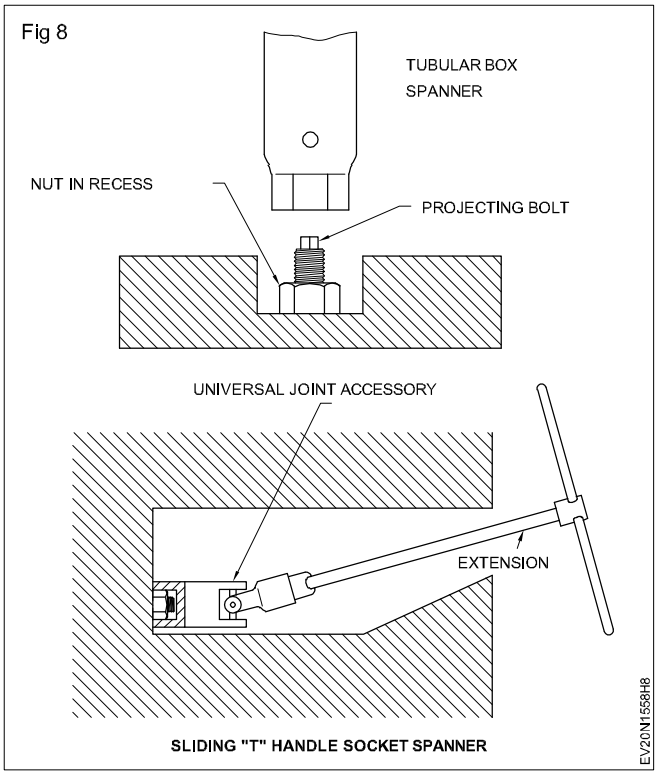

SLIDING "T" HANDLE SOCKET SPANNER

- Use the pipe wrench to tighten or loosen the threads of round shaped nut and bolts.
- Screw driver and spanner operation techniques are given in excercise no 1.5.56 for your reference. avoid over tighten the nut bolts.overtightening leads to broken or slipage the nut bolts or studs.

Fig 9

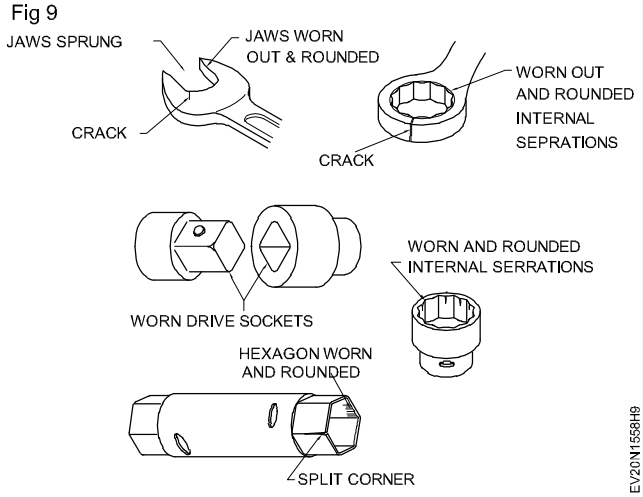

Note: The instructor has to demonstrate correct use of each tool and use of lubricant to loosening the risk formed nut, bolts and studs.

Provide assorted nut, bolts, screws and studs for practice.

- Use the different types of techniques for rotation, leverage and adjusting the tool size as needed.
- Before tightening or loosening the nut and bolts check the tool fits between the tool and fastener.

— — — — — — —

© NIMI NOT TO BE REPUBLISHED

Identify the phase, neutral and earth on power socket

Objectives: At the end of this exercise you shall be able to
- **test and identify phase, neutral and earth terminals of a single phase AC mains 3 - pin socket by using test lamp or neon tester.**

Requirements

Tools/Equipments/Instruments

- Trainees Tool Kit - 1 Set.
- Neon tester, 500 V - 1 No.
- Digital multimeter with probes - 1 No.
- Test lamp with holder and grill (240V AC/60 Watt) - 1 No.

Materials/Components

- PVC wire (1.5 sq.mm) - 1 m.
  Red colour, (5/20 gauge) - 1 m.
  Black colour, (5/20 gauge)
- Incandescent bulb 60 watts/250 V - 1 No.
  (per batch) - 1 No.
- Sketch pen - 1 No.

PROCEDURE

Safety precaution: Be cautious and safety from electrical shock.

Fix the grill on the holder to prevent damage to bulb

1 Make a test lamp setup as shown in Fig 1

Fig 1

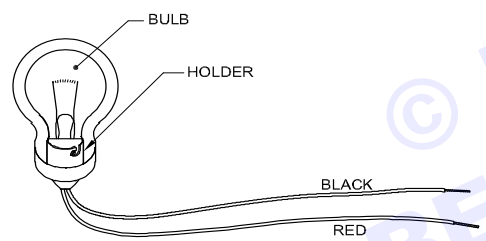

2 Test the continuity at the free ends using an ohmmeter to confirm correct wiring and connections of the test lamp.

3 Mark terminal sockets on the 3 - pin 230V, AC mains socket to identify phase, neutral and earth points as A, B and C using sketch pen as shown in Fig 2.

4 Switch ON the AC supply to the 3 pin socket.

5 Connect the test lamp across the 3 -pin socket outlet points (A&B) and check the presence of mains supply.

Fig 2

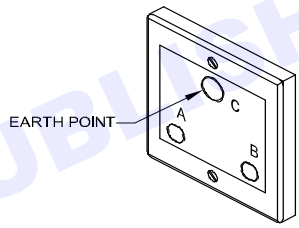

6 Record the observation in Table - 1

- If supply does not exist (lamp does not glow), consult your instructor before carrying out further steps.
- If lamp glows, the outlet point B is Phase or Live (L) mark outlet B as 'L' using sketch pen. Repeat steps 5 and 6 with the test lamp across Earth and socket B

7 Repeat steps 5 & 6 with test lamp across A - C and if lamp does not glow, the other point A is neutral (N) mark it as N.

Table - 1

Sl No.	Measurement across			Lamp condition	Remarks
	A- B	B - C	C- A		
1		-	-		
2	-		-		
3	-	-			

8 Get the work checked by the Instructor.

Note: If the mains supply circuit is provided with ELCB, it may break the circuit when the test lamp in connected across the line L and earth E

© NIMI NOT TO BE REPUBLISHED

Construct a test lamp and use it to check mains healthiness

Objectives: At the end of this exercise you shall be able to
- **construct a test lamp**
- **check mains healthiness by using the test lamp.**

Requirements

Tools/Equipments/Instruments

- Trainees Tool Kit - 1 Set.
- Digital multimeter with probes - 1 No.

Materials/Components

- PVC wire,
  Red colour, (5/20 gauge) - 1 m.
  Black colour, (5/20 gauge) - 1 m.
- Incandescent bulb 60W/250V - 1 No.

PROCEDURE

Safety precaution: Be cautious and your safety from electrical shock is your responsibility.

1 Skin the terminals of PVC wire and connect them into pendent lamp holder.

2 Fix the 60 watt bulb into the lamp holder.

3 Use ohm meter test and ensure continuity of the constructed test lamp as shown in Fig 1.

Fig 1

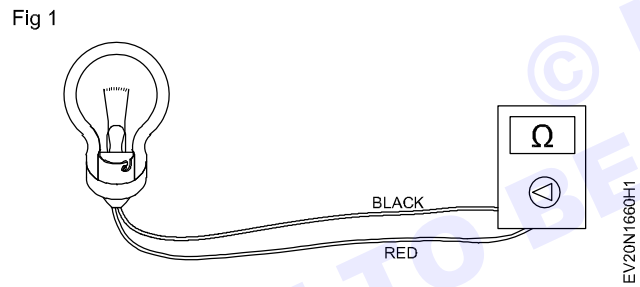

4 Connect the test lamp across live and neutral terminals of AC mains supply point.

5 Switch ON the mains supply and observe the brightness of lamp.

6 Record the observation of mains healthiness as good in Table - 1

Table - 1

Lamp brightness		Mains healthiness
OK	**Not OK**	**Good**

7 Get the work checked by the Instructor.

— — — — — — — —

© NIMI NOT TO BE REPUBLISHED

Measure the voltage between phase and ground and rectify earthing

Objectives: At the end of this exercise you shall be able to
- **measure the voltage between phase to ground and detect the fault**
- **rectify defective earth connection.**

Requirements

Tools/Equipments/Instruments
- Trainees tool kit - 1 Set.
- Digital multimeter with probes - 1 No.
- Test lamp - 1 No.

Materials/Components
- Sketch pen - 1 No.

PROCEDURE

Safety precaution: Be cautious when working on live Ac mains supply

TASK 1: **Measurement of voltage between phase and ground terminals**

1 Identify the phase and earth terminals of 3 pin AC 230V socket outlet.

2 Mark the three terminals as L.N & E by using a sketch pen

3 Switch ON the mains supply to the 3 pin socket.

4 Select AC voltage range on the DMM and measure voltage across 'L' and 'E' terminals as shown in Fig 1.

5 Record the observation in Table - 1.

Fig 1

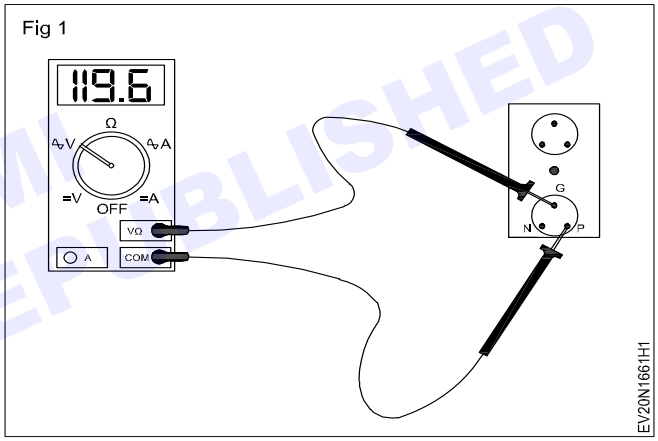

Table - 1

Sl No	AC voltage measured across terminals		Remarks
	L to E	L - N	
1			
2			

6 Get the work checked by the instructor.

— — — — — — — —

TASK 2: **Rectification of the defective earth.**

1 Connect test lamp between the earth and phase terminals socket.

2 Observe the condition of the brightness in the lamp.

3 Connect the test lamp between L and N terminals and confirm the lamp glowing.

4 Switch OFF the mains supply, remove the 3 pin socket and observe the wire connection on the earth terminal.

5 Check and ensure the continuity of the wire to the earth pit on the ground.

6 Check the continuity between the earth electrode and wire conductor.

7 Remove the bolt & nut clean the corrosion on the electrode contact terminal.

8 Refix the earth wire connection to the electrode. (Use new bolt & nut if the old is more corroded).

9 Check the continuity from earth electrode to the 3 pin socket terminal.

10 Switch ON power use test lamp, and measure voltage across 'L' and 'E' terminals record your observations.

11 Get the work checked by the Instructor.

— — — — — — — —

© NIMI NOT TO BE REPUBLISHED

Identify and test different AC mains cables

Objectives: At the end of this exercise you shall be able to
- **identify different types of AC main cables**
- **test different AC main cables.**

Requirements

Tools/Equipments/Instruments
- Trainees tool kit - 1 Set.
- Digital multimeter with probes - 1 No.

Aids: Chart showing different types of cables

Materials/Components
- 5 core cable - 1 m.
- 4core cable - 1 m.
- 3 core cable - 1 m.
- 2 core cable - 1 m.
- Cotton waste - as reqd.
- Cotton cloth - as reqd.

PROCEDURE

Note: The instructor has to select the types of cables for this exercise and label them using numbers

TASK 1: **Identify the different types of cables**

1 Pick one of the labelled cable from given lot, identify the number of cores, their colours and number of conductors in each core. (Figs 1 to 4)

2 Record the observations in Table - 1 (Refer to the chart to identify the name of cable)

Fig 1

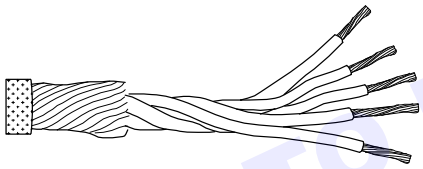

5 CORE CABLE

EV20N1662H1

Fig 2

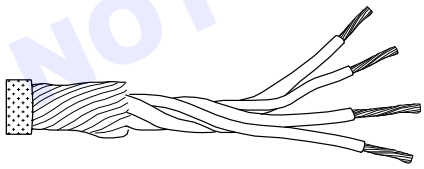

4 CORE CABLE

EV20N1662H2

Fig 3

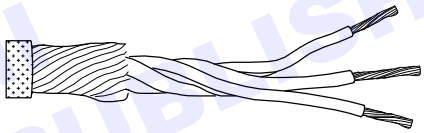

3 CORE CABLE

EV20N1662H3

Fig 4

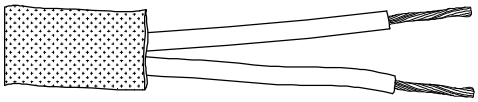

2 CORE CABLE

EV20N1662H4

3 Repeat steps 1 & 2 for remaining labelled cables.

4 Check the continuity of each core of above cables and record your observations in Table 1

Table - 1

Sl. No.	Label No.	No of Cores	Colours	No of Strands	Type name	Value in ohms	Remarks
1							
2							
3							
4							
5							

5 Get the work checked by the instructor.

— — — — — — — —

© NIMI NOT TO BE REPUBLISHED

TASK 2: **Testing the continuity of different type of AC main cables**

1 Connect the each cable ends between the proper terminals of multimeter for continuity test as shown in Fig 1

2 If the reading shows zero, then there is continuity in the cables. If it shows infinity, there is a break in the cable.

Fig 1

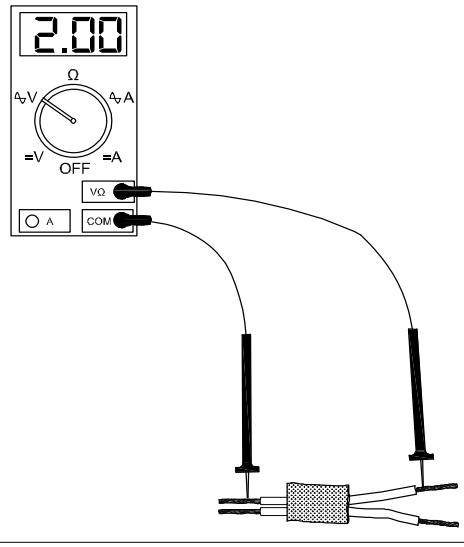

— — — — — — — — —

© NIMI
NOT TO BE REPUBLISHED

Prepare terminations, skin the electrical wires / cables using wire stripper and cutter

Objectives: At the end of this exercise you shall be able to
- **skin (cut and remove) the insulation of cables using manual stripper**
- **skin the insulation of two core cable using auto ejection type wire stripper**
- **remove the insulation of the PVC sheathed cable using side cutting pliers**
- **terminating wire end with crocodile clip and banana plug**
- **terminating skinned cable to three pin mains plug.**

Requirements

Tools/Equipments/Instruments
- Trainees tool kit - 1 Set.
- Wire stripper: manual & auto ejection type - 1 each.
- Diagonal cutting pliers 150 mm - 1 No.

Materials/Components
- Copper and aluminium cables of the following sizes:
- PVC single strand 1.5 sq. mm - 3 m.
- PVC single strand 2.5 sq. mm - 3 m.
- PVC cable 14/0.2 mm - 3 m.
- PVC cable 21/0.2 mm - 3 m.
- PVC cable 40/0.2 mm - 3 m.
- Crocodile clips (Black x Red) - 2 Sets.
- PVC insulated and PVC sheathed cable single core - 3 m.
- Two core PVC cable (250V/ 6A) -1 m.
- 3 core PVC cable - 1 m.
- 3 pin electrical mains plug 250 V/6A - 1 No.
- Cut pieces of flat twin core cable - 3 m.

© NIMI NOT TO BE REPUBLISHED

PROCEDURE

TASK 1: **Skinning the cable insulation using a manual wire stripper**

1 Pick one of the labelled cable.

2 Straighten the cable ends at which insulation is to be skinned.

3 Mark the point 10 mm from which the insulation is to be skinned on both the ends of the cable.

4 Adjust the jaws of the manual stripper to suit the gap equivalent to the size of the conductor core. (Fig 1a and 1b) and set the stop position of the screw

5 Hold the cable firmly in one hand, set the jaws at the mark, press the handle of the stripper and make a cut on the insulation.

Safety: Not to nick the conductor. For better practice try on small waste pieces of wires.

Fig 1

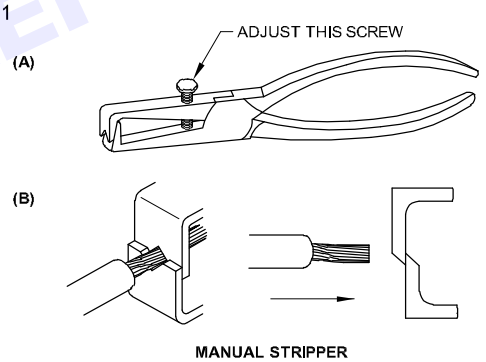

6 Pull the stripper to remove the insulation.

7 Get the work checked by the Instructor.

— — — — — — — —

TASK 2 : **Skinning the cable insulation using an auto ejection type wire stripper**

1 Repeat steps 1 to 3 of Task - 1

2 Take the auto ejection type wire stripper and jaws, slots for various diameter markings. (Fig 1 and 2)

3 Select a slot in the jaws whose diameter is equal to the conductor core

Safety Precaution: While using this stripper the cable insulation should be put in the proper slot to avoid damage to the conductor.

4 Place the marked point of cable at the jaws of the stripper exactly at the slot.

5 Hold the cable firmly in one hand and press stripper handles till the insulation is cut and removed from the cable end.

6 Repeat the above steps to skin the other ends of the cables

Fig 1

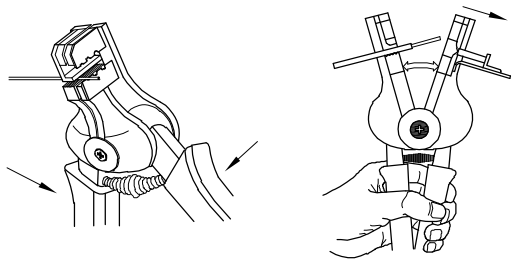

AUTO - STRIPPER

EV20N1663J1

Fig 2

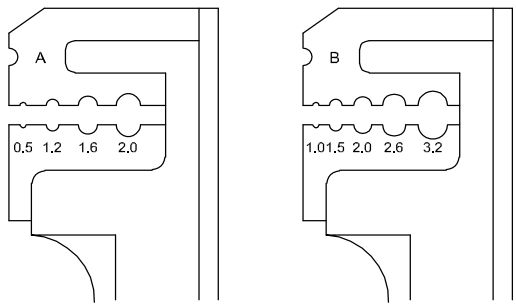

JAWS OF AN AUTO STRIPPER

EV20N1663J2

7 Get the work checked by the instructor.

— — — — — — — —

TASK 3 : **Skinning the insulation of three core cable**

1 Mark out the length up to which the insulation has to be removed from the cable end.

2 Hold the cable firmly, place the electrician knife on the marking of the sheath or insulation of the cable to be removed.

3 cut the insulation to a depth of approximately 1 mm thickness of the sheath or insulation carefully.

Safety precaution: Use the knife carefully. By cutting too deep into the insulation or sheath of a cable will damage the insulation of wires inside the cable. Avoid deep cutting (Fig 1).

This causes short circuit and breakdowns in electrical installations.

Fig 1

EV20N1663X1

4 Place the cable end on table top, use the knife, slit open the sheath or insulation between the circular cut you have made at the end of the cable, as shown in (Fig 2).

Fig 2

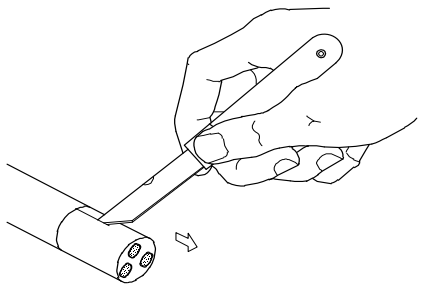

CUT ALONG THE CENTRE OF THE CABLE

EV20N1663X2

Be very careful not to cut the insulation of wires inside the cable.

Alternative method - using diagonal cutting pliers.

1 Cut the covering from the marked end up to the length it should be removed by using side cutting pliers as shown in Fig 3.

Fig 3

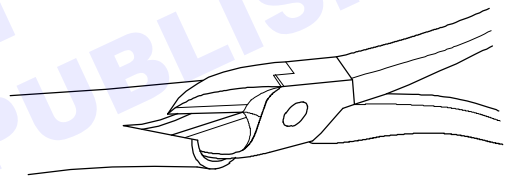

INSULATION REMOVAL BY A SIDE CUTTING PLIER

EV20N1663X3

2 Cut the sheathing along the circumference as shown in Fig 4.

Fig 4

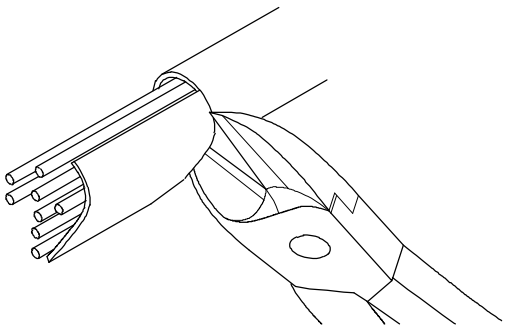

EV20N1663X4

3 Get the work checked by the Instructor.

— — — — — — — —

© NIMI NOT TO BE REPUBLISHED

TASK 4 : **Terminating wire end with crocodile clip and banana plug**

1 Take a piece of tinned red wire and a red crocodile clip.

2 Unscrew and take out the screw and washer from the crocodile clip.

3 Insert the tinned end of the wire through the leg of the crocodile clip as shown in Fig 1.

Fig 1

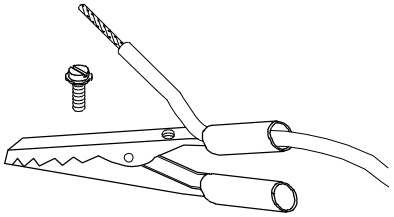

EV20N1663Y1

4 Bend the tinned exposed conductor to form a loop using a round nose plier. Place the loop in the screw, such that the loop is in the direction of screw as shown in Fig 2

Fig 2

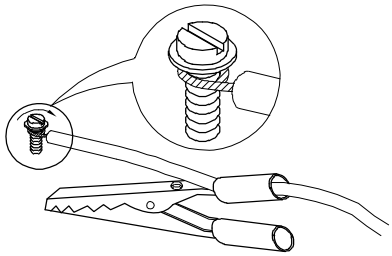

EV20N1663Y2

5 Put the screw back on the crocodile clip and tighten the screw firmly. While tightening hold the wire such that wire does not protrude below the screw washer.

Excessive wire protrusion results in weak termination. Hence, the termination may come out during usage.

6 Take a red colour banana plug, unscrew the loosen screw on it almost fully but do not take out the screw from its place.

As the screw is small it will be time consuming to replace the screw back in its position if taken out from the plug.

7 Bend the other free end of the tinned wire by hand or using a nose pliers such that it takes the shape of a loop and Insert the loop fully into the hole of the banana plug as shown in Fig 3 and tighten the screw firmly. Hold the wire with the body of the banana plug such that the wire does not slip off while tightening.

Fig 3

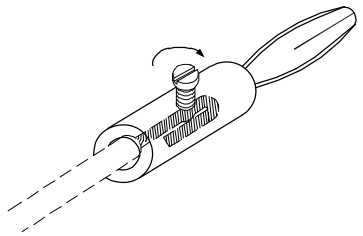

EV20N1663Y3

8 Holding the banana plug in one hand and the wire in the other pull the wire gently to ensure that the termination is firm. If termination is found loose, unscrew the screw, pull out wire and repeat steps 7.

9 Follow steps 1 to 8 above and prepare a black wire termination with crocodile clip to banana plug.

10 Repeat the steps 1 to 8 and terminate different wires as shown in Fig 4.

Fig 4

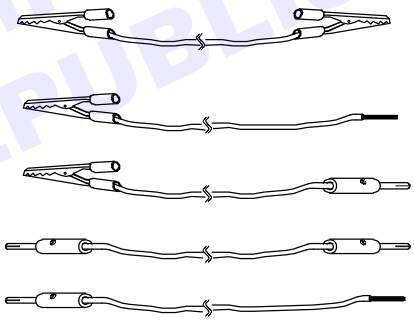

EV20N1663Y4

11 Get the work checked by the Instructor.

© NIMI NOT TO BE REPUBLISHED

— — — — — — — —

TASK 5: **Terminating skinned Cable to three pin main plug**

The steps given below are for the most common type of three-pin PLUGS. For other types the steps may vary slightly. Consult the instructor in case of difficulty.

1 Open the outer plastic casing of the 3 pin plug. Remove the cable grip and place them safely in a tray or screw box.

2 Ensure the length of the outer sheath skinned is equal to the distance between the earth terminal and the cable grip as shown in Fig 1.

3 Remove the anti-king shroud (anti-king ring) from the plug and take the cable through it as shown in Fig 2.

Fig 1

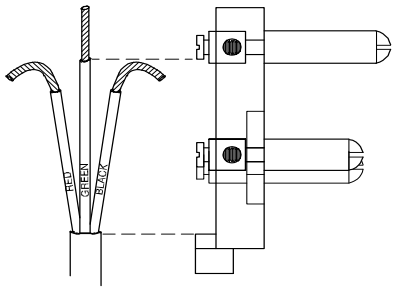

Fig 2

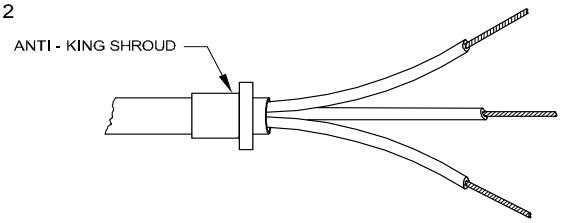

4 Make loops of the tinned conductor end of wires Loosen the screw insert the red wire loop into terminal marked L or Live as shown in Fig 3 a and tighten the terminal screw.

5 Insert the black/blue wire loop into the terminal marked N or Neutral and the green wire loop to the earth terminal as shown in Fig 3b and tighten screws.

Fig 3

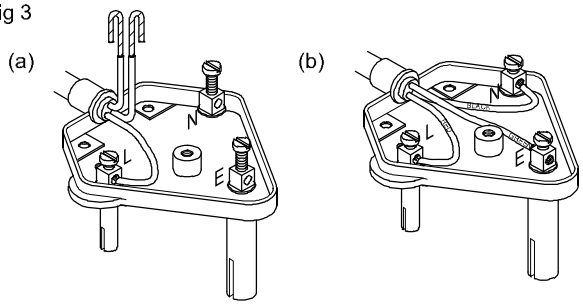

6 Position the anti-king shroud, reassemble the cable grip rubber and its screws.

7 Get the work checked by the instructor.

8 Reassemble the top cover of the plug. The finished work should look as shown in Fig 4.

The cables terminated with 3 pin main plug made in this exercise will be used in further exercises.

Fig 4

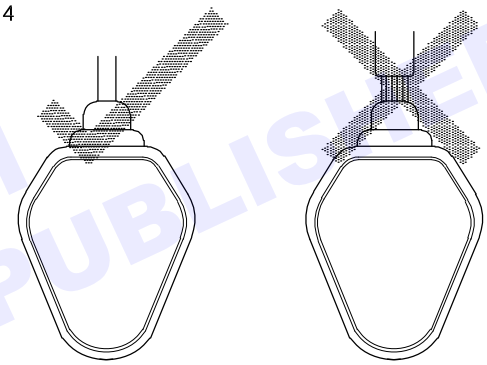

© NIMI NOT TO BE REPUBLISHED

Measure the gauge of the wire by using SWG and outside micrometer

Objectives: At the end of this exercise you shall be able to
- **measure the gauge of the wire by using standard wire gauge (SWG) or outside micrometer.**

Requirements

Tools/Equipments/Instruments

- Trainees tool kit - 1 Set.
- Standard wire gauge (per batch) - 1 No.
- Outside micrometer 0-25 mm (per batch) - 1 No.
- Pocket table book / wire table - as reqd.

Materials/Components

- Single strand wire pieces (assorted sizes) - 2 Nos.
- Rigid multistrand wire piece - 1 No.
- Flexible multi strand wire pieces
  - Red colour - 1 No.
  - Black colour - 1 No.
  - Green colour - 1 No.
- Dry cloth - as reqd.

PROCEDURE

Note: Do not use nose pliers/tweezers to straighten conductors as this may deform conductors diameter. Dust and other particles on the conductor, bends and kinks in the conductor give wrong measurement of the diameter / gauge number.

TASK 1: **Measurement of gauge number of wire using standard wire gauge**

1 The Instructor has to attach labels to identify each piece of wire correctly as shown in Fig 1.

Fig 1

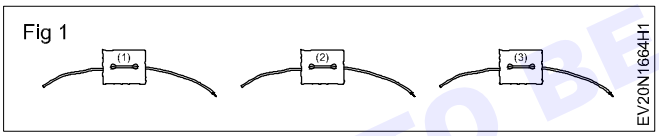

2 Clean the skinned end of single strand wires using dry cloth and straighten the conductors by hand.

3 Pick a labelled single strand wire for measurement of gauge number.

4 Hold the SWG in one hand and insert the exposed conductor of the wire into one of the large holes of the stranded wire gauge (SWG) and take out the wire through the upper slot above that hole as shown in Fig 2.

5 Repeat step 3 till the conductor exactly fits into the slot as shown in Fig 3. Remove the conductor by pushing it down into the hole and pulling it out.

6 Note down the number printed / marked at the hole and record the observation in Table 1.

7 Repeat steps 3 and 4 for the other end of the wire.

8 Repeat steps 3 to 6 for the other single strand wires.

9 Get the work checked by the Instructor.

Fig 2

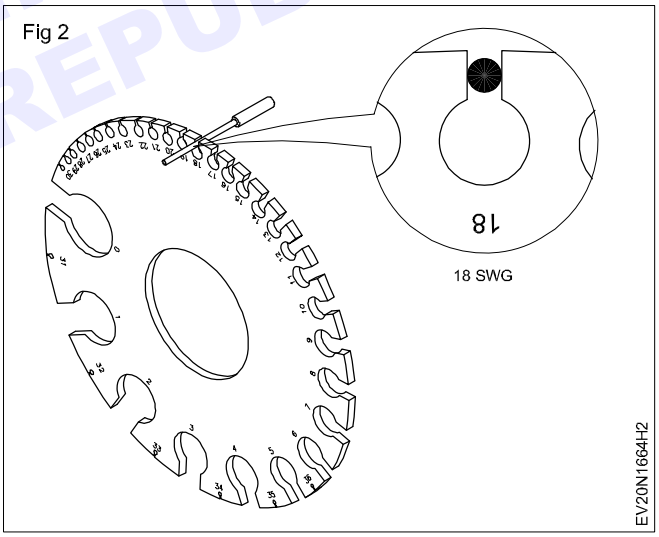

Fig 3

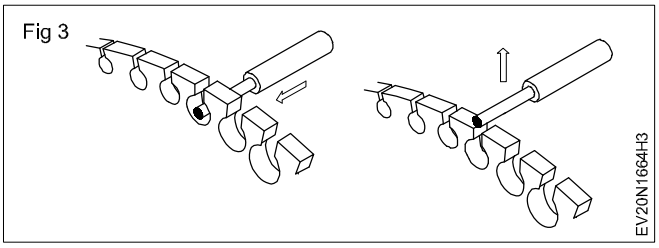

10 Take the rigid multistrand wire. Clean the conductors and untwist the twisted strands and separate one of the strands as shown in Fig 4.

© NIMI NOT TO BE REPUBLISHED

Fig 4

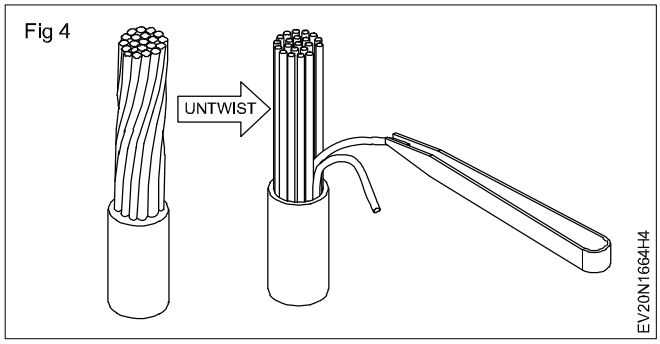

11 Carry out steps 3 & 4 measure and record the SWG of one strand of the wire.

12 Count the total number of strands available in that wire and record it in Table 1

12 Repeat steps 9 to 11 for the flexible multistrand wires.

13 Refer pocket table book/wire table and convert the measured SWG value of wires into diameter of the wires in inches and millimeters. Record the readings in Table 1.

Table 1

	WireTag No.		Conductor Size of SWG	Conductor dia. in mm	Conductor dia.in inches	No. of Conductors
Single Strand Wire	Sample Entry	END 1	20	0.91	0.036	1
		END-2	20	0.91	0.036	
	1	END-1				
		END-2				
	2	END-1				
		END-2				
Multi-strand Wire	3					
	4					
	5					
	6					
	7					
	8					

14 Get the work checked by the Instructor.

— — — — — — — —

TASK 2 : **Measurement of diameter of the wire using Outside Micrometer**

Note: The Instructor has to guide the trainees in handling the micrometer and taking precise measurements.

1 Find the least count and zero error of the given micrometer as shown in Fig 1. Note down the values in Table 2.

2 Take the wire with label No. 1 for measurement. Clean and straighten the exposed conductor.

3 Carefully hold the micrometer in hand and place the conductor in the gap between the anvil and spindle. Turn the thimble till the conductor is just held between the anvil and the spindle as shown in Fig 1. Turn the ratchet till a click sound is heard.

Safety precaution:

Do not over tighten as this may deform the conductor and hence give wrong measurement.

4 Record the reading on the barrel and thimble in table 2. Loosen the grip on the conductor and take out the conductor from the micrometer.

5 Repeat steps 2,3 & 4 for the remaining single strand and multi-strand wires

Measure the diameter of only one strand in the case of multi-strand wires.

6 Calculate and record the diameter of the wires in mm for the micrometer readings recorded.

© NIMI NOT TO BE REPUBLISHED

7 Compare the dia. of the wires noted in Table 1 using stranded wire gauge and the dia. measured using micrometer. If readings are found not matching consult the instructor.

8 Get the work checked by the Instructor.

Note: Keep the wires to be utilized for the next exercise.

Fig 1

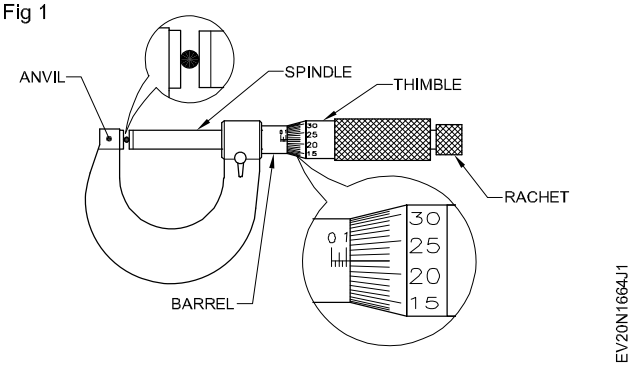

Table 1

Least count (LC)			
Zero error correction (ZC)			
Wire tag No.	**Barrel reading**	**Thimble reading (Thimble div x LC)**	**Wire dia. in mm (2) + (3) ± ZC**
1			
2			
3			
4			
5			
6			
7			
8			
9			
11			
12			
13			
14			
15			
16			
17			
18			
19			
20			

© NIMI NOT TO BE REPUBLISHED

— — — — — — — —

Practice on refer table and find current carrying capacity of wires

Objectives: At the end of this exercise you shall be able to
- **determine the current carrying capacity of copper conductor by referring to the wire table**
- **determine the current carrying capacity of aluminium conductor by referring table.**

Requirements

Tools and Instruments
- Trainee's tool kit - 1 No.
- Wire reference book - 1 No.
- Wire cutter - 1 No.

Materials / Components
- Cotton cloth - as reqd.
- Different size of copper conductor cable - as reqd.
- Different size of aluminium conductor cable - as reqd.
- wire table - as reqd.
  SWG size in inches/mm
  Wire table of carrying capacity of insulated copper wire table 4 & 5

PROCEDURE

TASK 1 : **Determination of current carrying capacity of copper conductor**

Assumption: A bunch of different diameters of copper conductors are to be displayed on the work bench. Trainees are required to find out the current carrying capacity of wires given below by referring the Table 1.

1 Determine the current carrying capacity of the given copper conductor and note down in Table 2.

© NIMI NOT TO BE REPUBLISHED

Table 1

COPPER AND EQUIVALENT ALUMINIUM CONDUCTOR CABLES CURRENT RATINGS

Copper Conductor				Aluminium Conductor			
Size of cable		Current Rating in amperes		Size of cable		Current Rating in Amperes	
No & dia of wire(mm)	Nominal area in mm^2	2-core Cable	3 or 4 core cable	No & dia in mm	Nominal area in mm^2	2-core Cable	3 or 4 Core cable

Table 2

Size of cable of Copper Conductor		Current Rating in amperes
No and dia of wire in mm	Normal area in mm^2	

2 Determine the copper conductor size for the given current rating and note down in Table 3.

Table 3

Current rating in Amperes	Copper Conductor size

3 Get the work checked by the Instructor.

— — — — — — — —

TASK 2 : **Determination of the current carrying capacity of Aluminium conductor**

1 Determine the current carrying capacity of the given aluminium conductor and note down in Table 4.

Table 4

Size of cable of Aluminium Conductor		Current Rating in amperes
No and dia of wire in mm	Normal area in mm^2	

© NIMI NOT TO BE REPUBLISHED

2 Determine the aluminium conductor size for the given current and note down in Table 5.

Table 5

Current rating in Amperes	Aluminium Conductor size

3 Get the work checked by the Instructor.

Practice on crimp the lugs to wire end

Objectives : At the end of this exercise you shall be able to
- **choose the wire**
- **collect the suitable size of lug**
- **crimping the lug.**

Requirements

Tools/Instruments/Equipments

- Trainee's tool kit - 1 No.
- Crimping pliers (1mm to 16mm) - 1 No.
- Steel rule 300mm - 1 No.
- Insulated side cutting pliers - 1 No.
- Electrician Knife - 1 No.
- Wire stripper auto-eject 200mm - 1 No.
- Wire stripper (manual) 200 mm - 1 No.

Materials/Components

- Lugs 1.5 mm - 6 Nos.
- Lugs 2.5 mm - 6 Nos.
- Lugs 4 mm - 6 Nos.
- Lugs 6 mm - 6 Nos.
- Cable 1.5 sq mm,2,4,5,6 length 300mm - 1 No each.
- Cotton waste - as reqd.
- Conducting paste - 1 tube.

PROCEDURE

TASK 1 : **Choosing the wire**

1 Select the wire depending on the application of work.

2 Cut the wire 300 mm length from the wire coil as shown in Fig 1.

3 Get the work checked by the Instructor.

Fig 1

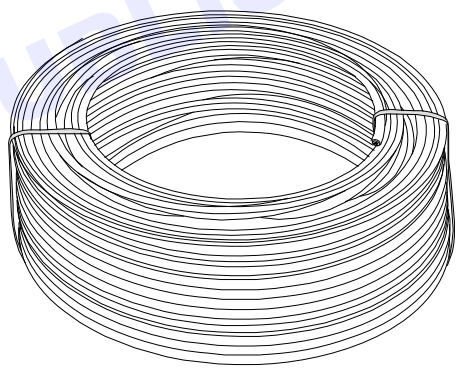

EV20N1666H1

© NIMI NOT TO BE REPUBLISHED

— — — — — — — —

TASK 2 : **Collecting the suitable size of Lug**

1 After finding the cable size, select the correct lug from the table as shown in Fig 1.

2 Show it to the instructor for its correctness.

3 Get the work checked by the Instructor.

Fig 1

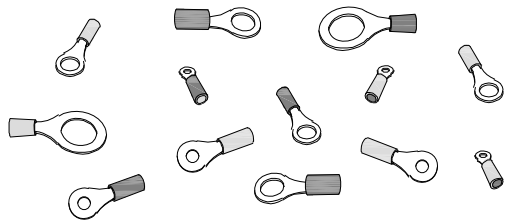

EV20N1666J1

— — — — — — — —

TASK 3: **Crimping the lug**

1 After selecting wire and lug select the correct crimping tool

2 Measure the length of Lug using steel rule.

3 Measure appropriate strip length. Line up the connector barrel to the wire and mark the cable as shown in Fig 1.

4 Once determined the length of the wire strip the end using wire stripper, being careful not to damage the conductors as shown in Fig 2.

5 Check the striped insulation to the proper length, so that the conductor can be fully inserted into the connector barrel as shown in Fig 3.

Fig 1

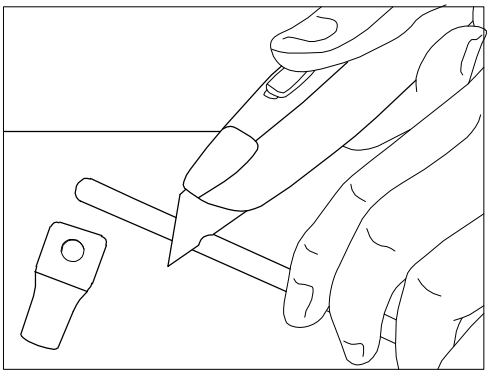

Fig 2

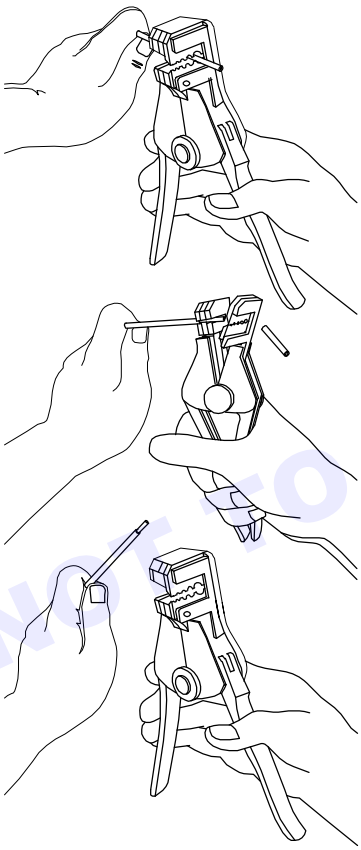

Fig 3

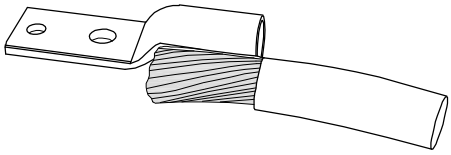

6 Insert the wire in to the lug as shown in the Fig 4.

7 Ensure that all wires of the conductor are within the crimp barrel as shown in Fig 5.

Fig 4

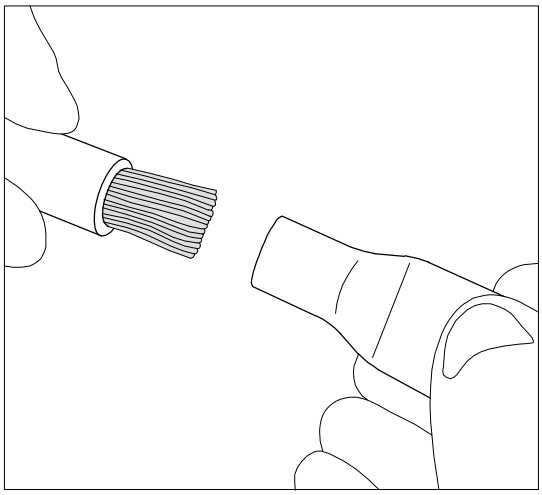

Fig 5

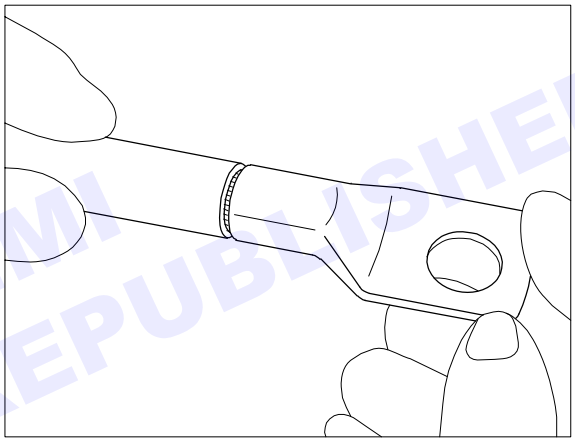

8 Select the appropriate die style to match the installation tool. The die index number and colour code indicated on the connector should match when the correct die is chosen as shown in Fig 6.

Fig 6

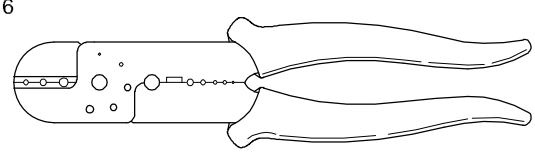

9 Start the crimping tool cycle and hold steady until the entire cycle is complete. Release ram. Repeat the same process until all crimp locations on the barrel have been completed as shown in Fig 7.

10 After crimping remove the crimped cable as shown in Fig 8.

11 Get the work checked by the Instructor.

© NIMI NOT TO BE REPUBLISHED

Fig 7

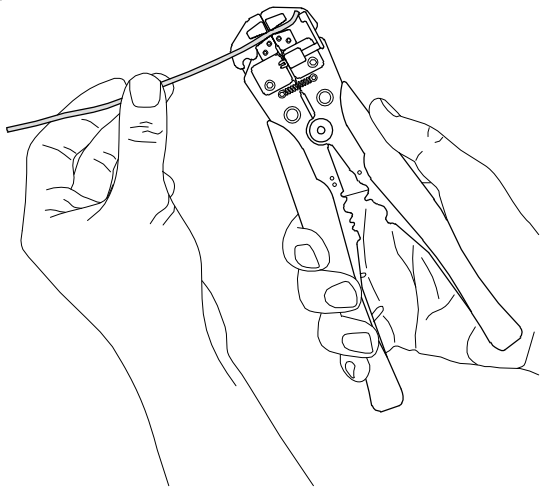

EV20N1665H7

Fig 8

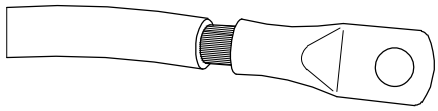

EV20N1665H8

© NIMI
NOT TO BE REPUBLISHED

Measure AC and DC voltages by using multimeter

Objectives: At the end of this exercise you shall be able to
- **measure the AC voltage using multimeter**
- **measure the DC voltage using multimeter.**

Requirements

Tools/Instruments/Equipments
- Trainee's tool kit - 1 No.
- Digital Multimeter with probes - 1 No.
- Auto transformer (VARIAC) single phase having input 0-220V AC output 0-270VAC /15A - 1 No.

Materials/Components
- Dry cell 1.5 V / AA size - 1 No.
- 3V CR 2032 Lithium - 1 No.
- 9V battery (Alkaline type) - 1 No.
- 12 V battery (SMF type) AH rating available in the section) - 1 No.

Note:

1 **The instructor has to explain the differences between the analog multimeter and DMM.**

2 **Provide an analog multimeter to trainees and instruct them to study the panel/ranges/scales/selector switch/socket etc., in it.**

PROCEDURE

TASK 1: **Measurement of AC voltage using multimeter.**

1 Observe and check the number of available ranges in the given multimeter.

2 Plug the black colour probe into the COM socket and plug the red colour probe into the V, Ω, mA, socket of multimeter as shown in Fig 1.

Fig 1

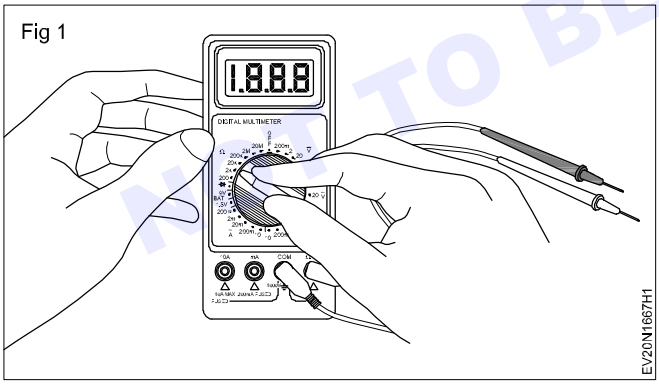

3 Select the multimeter knob (switch) to the AC Voltage range.

Note : Most multimeters power up in Auto range mode. This automatically selects a measurement range based on voltage present.

4 Connect the meter across the autotransformer output socket.

Safety precaution:

Note: Before power ON auto transformer keep the voltage selector knob in 0V, position.

5 Power ON the Auto Transformer observing the multimeter increase the voltage to 10 volt.

6 Record the observation in Table - 1

7 Repeat the above step in steps of 10V up to 50V note down the corresponding readings in Table 1.

8 Get the work checked by the instructor

9 Bring down the voltage selector to OV position and switch OFF the variac.

Table - 1

S.No	Variac dial position	Meter reading	Remarks
1			
2			
3			
4			
5			

© NIMI NOT TO BE REPUBLISHED

TASK 2 : **Measurement of DC voltage using multimeter**

1 Select the multimeter knob (switch) to the DCV or V Voltage section as shown in Fig 1.

Fig 1

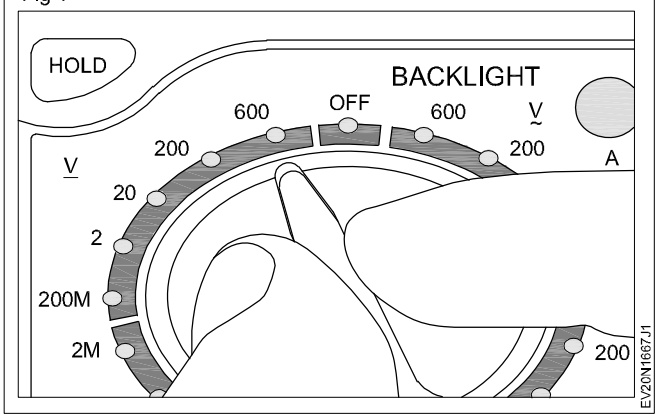

2 Take the 9V battery identify supply terminals place the red probe on the positive terminal, and the black probe on the negative terminal.

Note: If the range was set too high, may not get a very accurate reading. Turn the dial to a lower range to get a better reading as shown in Fig 2.

3 With the range set correctly, as shown in Fig 2, measure the voltage of the battery and record the readings in Table - 1.

4 Repeat the above steps for other battery and record the reading in Table - 1.

Fig 2

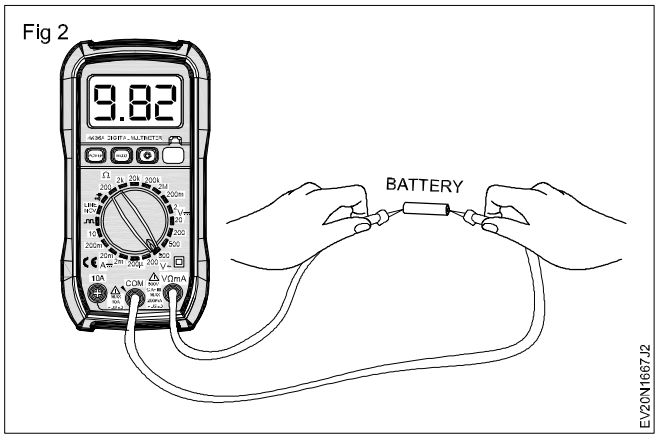

Table 1

S No.	Battery type	Mark readings	Remarks
1	1.5 V		
2	3 V		
3	9 V		
4	12 V		

5 Get the work checked by the Instructor.

— — — — — — — —

© NIMI NOT TO BE REPUBLISHED

Practice on jointing wire by using soldering and measuring voltage, currents & resistance

Objectives: At the end of this exercise you shall be able to
- **jointing wire by using soldering**
- **measure circuit voltage, current and resistance**
- **test the continuity of fuses, jumber wire, fusible links and circuit breaker.**

Requirements

Tools / Instruments

- Trainee's tool kit - 1 No.
- Digital Multimeter - 1 No.
- Soldering iron - 1 No.

Equipments / Machineries

- Electric vehicle - 1 No.

Materials

- Cotton waste - as reqd.
- Soap oil - as reqd.
- Wire - as reqd.
- Fuse - as reqd.
- Flux - as reqd.

PROCEDURE

TASK 1: **Solder the cable using soldering iron**

1 Clean the strands and get a copper face free from sulphate.

2 Insert the wire end as shown in the Fig 1.

Fig 1

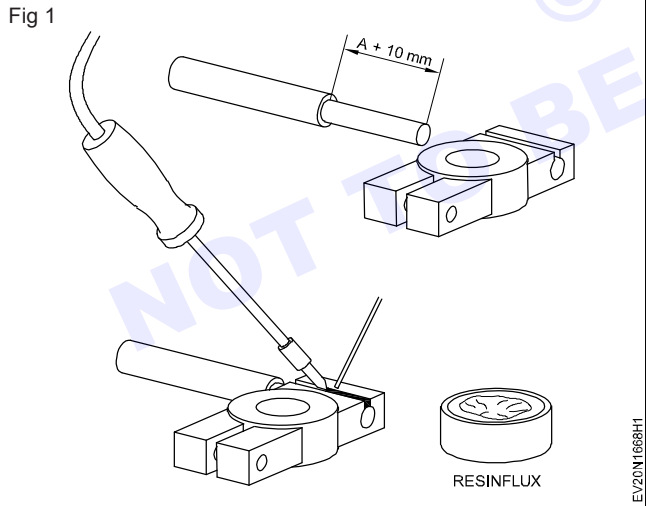

3 Hold the clamp in a vice in between two wooden blocks to prevent heat flow to vice.

4 Connect a 1000w/220v soldering iron to an AC source. Keep the iron on a brick.

Do not over heat the iron. Overheating would impair wetting of iron. Wetting means coating soldering iron with solder.

5 Solder the end with clamp face with molten solder.

6 Hold the clamp horizontally and solder the split and close the split with solder.

7 Hold the clamp as shown in the Fig 13 and solder around the cable without melting the insulating sleeve.

Wound the insulation material with a wet cloth near the soldering end to prevent melting.

Soldering the circuit wire terminals

1 Remove the insulation as shown in the Fig 2 without cutting conductor strands.

Fig 2

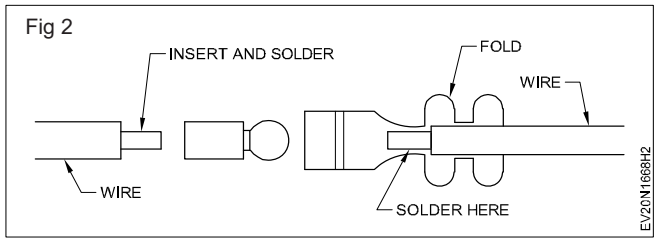

2 Connect a soldering iron of 300w/220v to an AC supply and keep the iron on a brick.

3 Clean the copper strands with emery paper.

4 Twist the end neatly.

5 Keep the end on a wooden plank.

6 Wet the iron with soft solder.

Do not over heat the iron

7 Coat the end with solder.

8 Insert the end into the small loop on the eyelet terminal.

9 Fold the terminal tabs one by one and crimp with a tool.

© NIMI NOT TO BE REPUBLISHED

10 Now keep the clamp on wooden plank.

11 Keep the iron so that a wide area of contact is achieved for better heat transfer to obtain a molten flow of soft solder.

12 Wait for solidification of solder and inspect the result. Repeat the same operation for other terminal soldering.

Insulting the wires and cables

For small wires and cables various sizes of insulation sleeves are available. These sleeves can be inserted before soldering the terminals.

13 Construct a simple circuit by using wire and soldering iron. Solder the wires as given circuit diagram.

— — — — — — — —

TASK 2: **Construction of simple electrical circuit and measuring on current, voltage and resistance by using digital multimeter.**

Note: The instructor has to guide the trainees to construct a simple electric circuit

- Draw the simple electrical circuit in your note book as shown in Figure - 1
- Collect the materials for construct the electrical circuit
- Prepare the DC series circuit diagram on the plywood board.
- Form a circuit as shown in the figure 1.

Fig 1

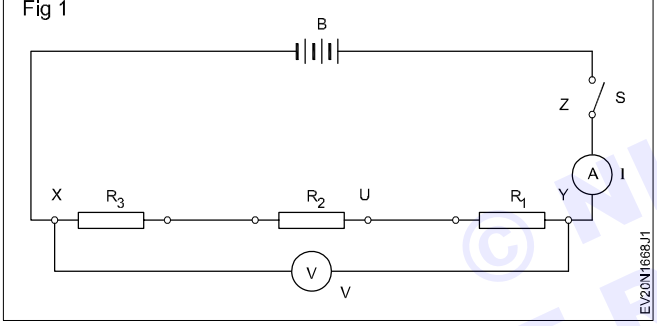

- Use the digital multimeter for measure the current, voltage, resistance of a simple constructed circuit.
- Check the available range scales and other information of multimeter
- Check the symbol on meter indicating its placement position.
- Connect the meter probes ensuring proper color of probe at meter terminals.

Note: Get check your work done checked by your instructor

- Set the meter range switch to measure circuit voltages and choose the scale for taking reading of simple electrical circuit.
- Connect the multimeter black probe in 'X' point and connect the red probe on 'Y' point to measure the voltage of circuit (Fig 2)
- Switch on the circuit power and note the digital multimeter panel reading.
- Switch off the circuit power and disconnect the multimeter probe
- Set the multimeter to required current measurement range
- Connect the red probe at the ponit of 'Z' and connect the black probe on 'Y' point of disconnected ampere meter output point 'V' (Fig 3)
- Switch on the circuit power and note the current pass range through the circuit.
- Switch off the power of circuit and remove the multimeter probe from the circuit wire connection
- Now set the resistance range in your multimeter
- Reset the probe connections of multimeter
- Connect the multimeter red probe at 'Y' point and connect the black probe at 'U' (Fig 4) point
- Switch on the power of circuit and note the resistance value shown in multimeter
- Remove the black probe from 'Y' point and connect it at 'U' point and then 'X' point Note the both resistance Value (Fig 5)
- Note the reading in table 1
- Compare the current, voltage and resistance value of the circuit

Fig 2

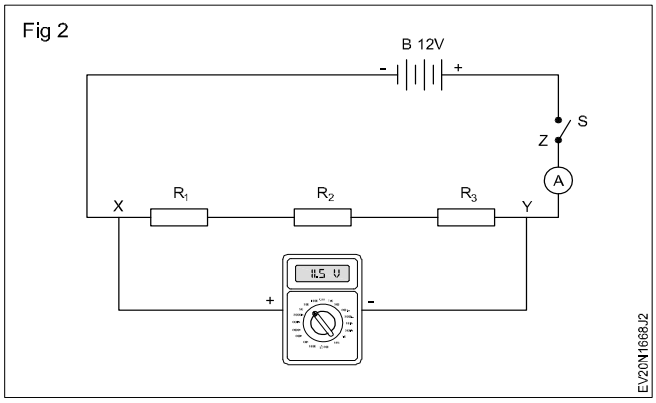

Fig 3

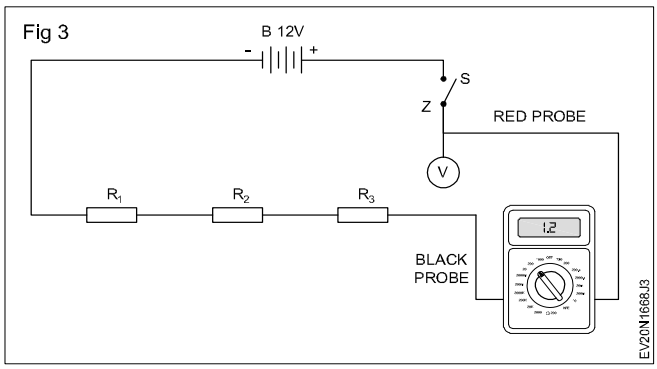

© NIMI NOT TO BE REPUBLISHED

Fig 4

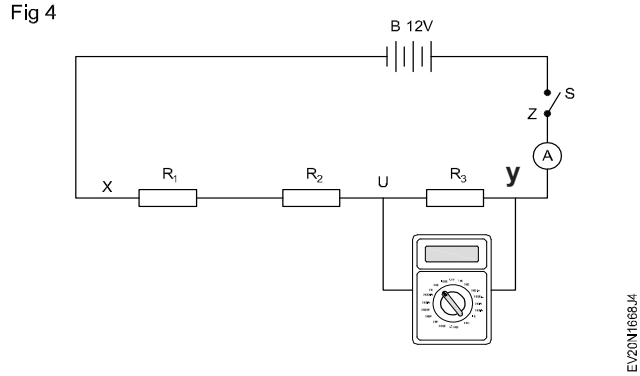

Fig 5

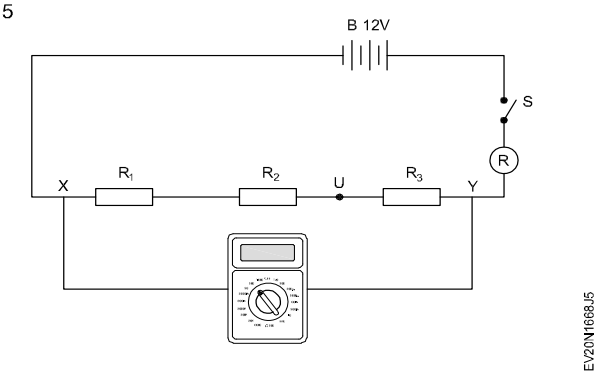

Table - 1

S. No.	Power Values	Reading Value R1	Reading Value R2	Remarks
1	Voltage			
2	Current			
3	Resistance R1			
4	Resistance R2			

— — — — — — — —

TASK 3: **Continuity test of fuse**

- Identify the fuses location in a vehicle
- Pull out any one fuse from fuse box
- Visually check the fuse continuity
- If not visibility with the multimeter to check the continuity of fuse as shown in Figure - 1
- If fuse is blown out replace the with new one (Fig 2)

Fig 2

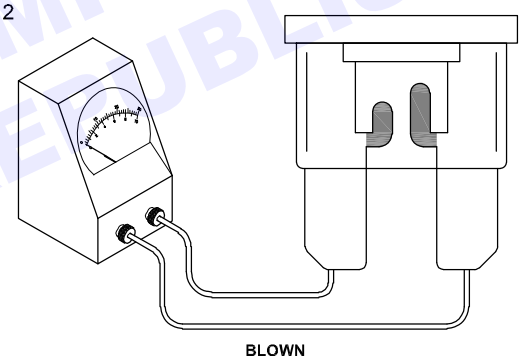

Fig 1

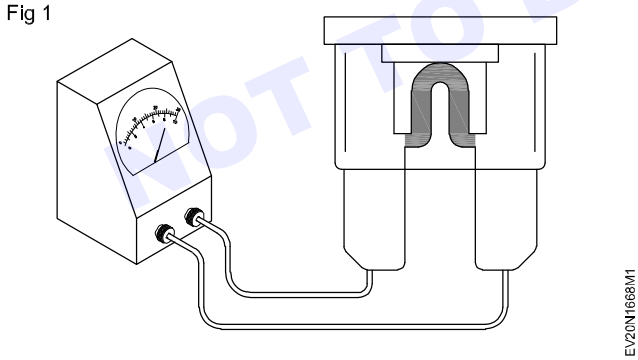

© NIMI NOT TO BE REPUBLISHED

— — — — — — — —

TASK 4: **Check continuity of Jumber Wire**

- Select the any one jumber wire for continuity check
- Visually check the wire if you feel jumber wire continuity is broken use it for continuity test
- Select the full charged battery and test lamp
- Connect the positive and negative wires with test lamp holder
- Fix the bulb with test lamp holder
- Connect the test lamp's negative wire with battery negative terminal
- Connect the test lamp's positive wire with battery positive terminal (Fig 1)
- If test lamp bulb is glowing, means jumber wire continuity is ok. If bulb is not glowing mean jumper with continuity is disconnected

Fig 1

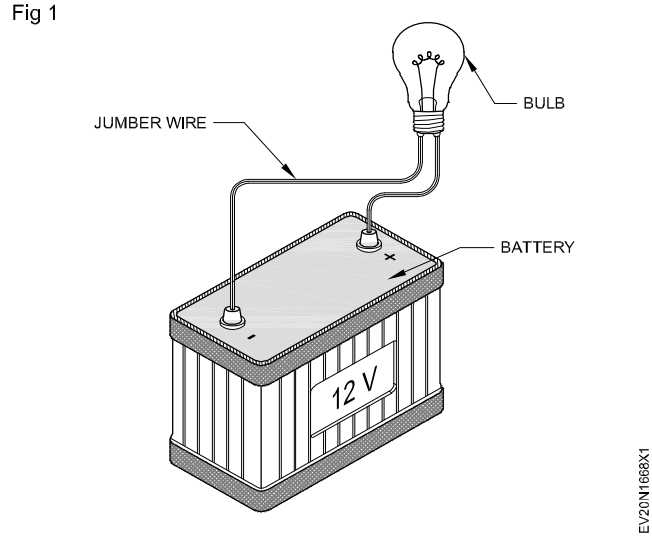

TASK 5: **Fusible link continuity test**

1 Visually inspect the fusible link for burnout, disconnect, and damaged.

2 Check with the multimeter for continuity test (Fig 1)

3 Replace the fusible link if damaged, burnout or disconnected

Note : Never replace the fusible link with normal electrical wire

Fig 1

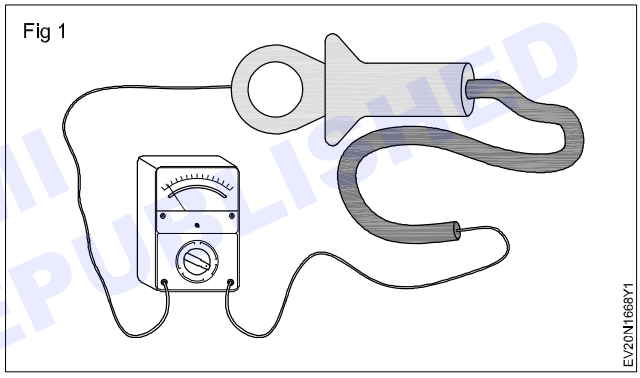

TASK 6: **Circuit breaker continuity test**

1 Find the location of circuit breaker

2 Check the bimetallic strip (1)

3 Check the moving contact point (2)

4 Check the fixed contact point (3)

5 Check circuit breaker terminals (4) & (5)

6 Identify the damaged parts during visual inspection of above mentioned parts

7 If find any damaged parts in circuit breaker, replace the part or replace the assembly

8 If contact point (2) & (3) pitted, file the surface and adjust it

9 Check the continuity of circuit breaker by using multimeter or test lamp as shown figure.

10 Ensure the proper function of circuit breaker

Fig 1

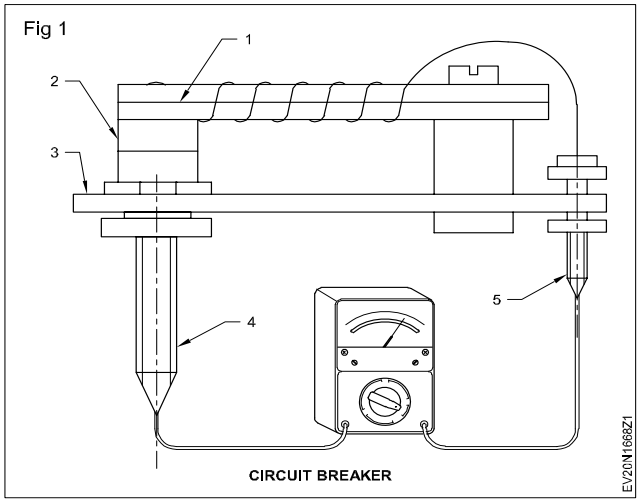

© NIMI NOT TO BE REPUBLISHED

Practice to check the electrical circuits

Objectives: At the end of this exercise you shall be able to
- **check the DC series circuit joints**
- **check the DC parallel circuit joints**
- **check the DC series parallel circuit**
- **test the DC circuit with test lamp**
- **measurements of current flow in a circuit by usage ammeter.**

Requirements

Tools / Instruments

- Trainee's tool kit - 1 No.
- Multimeter - 1 No.
- Ohm meter - 1 No.
- Ammeter volt meter - 1 No each.

Equipment / Machines

- Battery 12V - 1 No.
- Vehicle - 1 No.

Materials

- Wires 4 mm (Red & Black) - as reqd.
- Insulation tape - as reqd.
- Emery paper - as reqd.
- Soap oil - as reqd.
- Cotton waste - as reqd.
- Wire clip - as reqd.
- Bulb 12 V - as reqd.

© NIMI NOT TO BE REPUBLISHED

PROCEDURE

TASK 1: **DC series circuit**

1 Prepare the D.C series circuit diagram

2 Form a circuit as shown in the Fig 1.

Fig 1

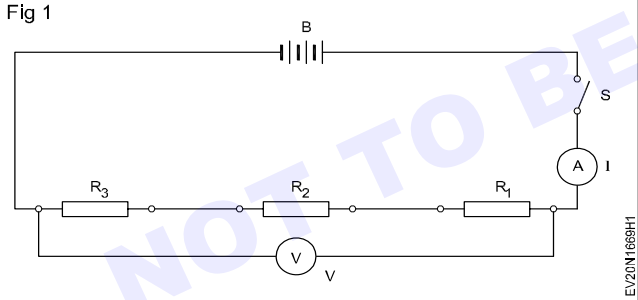

3 Close the switch 'S', measure the current 'I' and voltage 'V'.

4 Enter the measured values in Table 1.

5 Switch off the supply, connect the ammeter and voltmeter as shown in the Fig 2. Switch on the supply and measure voltage V_1 and current I_1 through R_1.

Fig 2

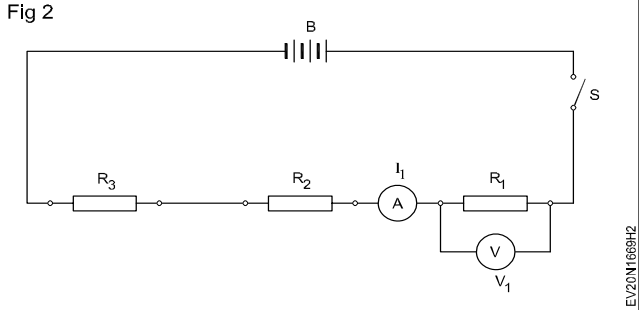

6 Switch off the supply, connect the ammeter and voltmeter as shown in the Fig 3. Switch on the supply and measure the voltage V_2 and the current I_2 in R_2.

Fig 3

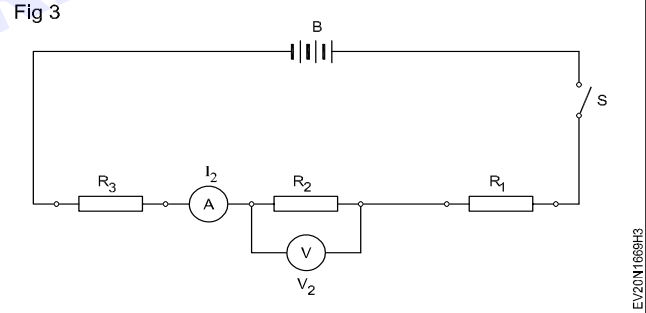

7 Draw circuit diagram showing the position of 'A' and 'V' in the circuit to measure the current I_3 and voltage V_3 across R_3.

8 Connect and measure I_3 and V_3 across R_3.

9 Enter the measured values in Table 1.

Table 1

Values	Total circuit	$R_1 = 10$	$R_2 = 20$	$R_3 = 10$
Current	I =	I_1 =	I_2=	I_3=
Voltage	V =	V_1 =	V_2=	V_3=
Resistance	R =	R_1=	R_2=	R_3=

— — — — — —

TASK 2: **DC parallel circuit**

1 Prepare the D.C parallel circuit diagram

2 Form the branches 1,2,3 by connecting double contact single filament 20W bulbs L_1, L_2, L_3 with a holder, an ammeter A4 of 0-30 Amp DC (1 Amp.DIV) and switch 'S_4' in series. (Fig 1)

Fig 1

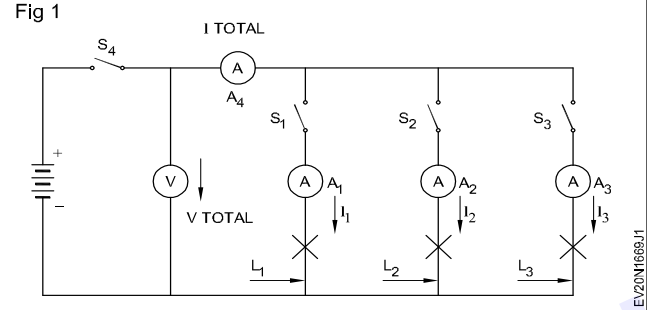

3 Connect the lamp terminals of the three branches connect with the lead of the switch S_4.

4 Form the circuit as shown in circuit diagrams with voltmeter (V), ammeter (A_4), switch 'S_4' and battery.

5 Close the switch 'S_4' and switch 'S_1' in branch 1.

6 Read the ammeters 'A_4' and 'A_1' and record the values in Table 2.

7 Close the switches 'S4' , 'S1' and 'S2' in branch 2.

8 Read the ammeters 'A4' 'A1' and 'A2' and record the values in Table 2

9 Close the switches 'S4', 'S1', 'S2', and 'S3' in branch 3.

10 Close the switches 'S4', 'S1', 'S2' and 'S3' in branch 3.

11 Read the ammeters 'A4' 'A1' 'A2' and 'A3' and record the value in Table 1.

12 Repeat the above steps after clamping the torch lamp in any one branch with 6v 300 mA lamp and record the results in Table 1.

13 Repeat the exercise by replacing all the three 'lamps with holder' by wire-wound resistors' (two numbers of 100 ohms and one of 150 ohms).

Table 1

Sl. No.	I_1	I_2	I_3	I	Total	Switches closed	Components in the branches
1						S_4, S_1	3 lamps of 1.7 Amps each
2						S_4, S_1, S_2	,,
3						S_4, S_1, S_2, S_3	,,
4						S_4	,,
5						S_4, S_1	2 lamps of 1.7 Amps lamp and one 300mA
6						S_4, S_1, S_2	,,
7						S_4, S_1, S_2, S_3	,,
8						S_4, S_1	Resistors two-one 100 ohms and another 150 ohms
9						S_4, S_1, S_2	,,
10						S_4, S_1, S_2, S_3	,,

— — — — — —

© NIMI NOT TO BE REPUBLISHED

TASK 3: **DC Series parallel circuit.**

Prepare the D.C series parallel circuit diagram

1 Calculate the voltage and currents for the series parallel circuit shown in Fig 1. Enter the values in Table 1.

2 Calculate the total resistance R_T and total current I_s for V_s = 50V and enter in Table 2.

3 Set the value of the rheostat resistances equal to the value given in Fig 5 (i.e. R_1 = 25 ohms, R_2 = 300 ohms, R_3 = 40 ohms and R_4 = 60 ohms by measuring the resistance value between one end and the variable point of the rheostat)

4 Form the circuit and measure the voltage and current. Record them in your note book.

Fig 1

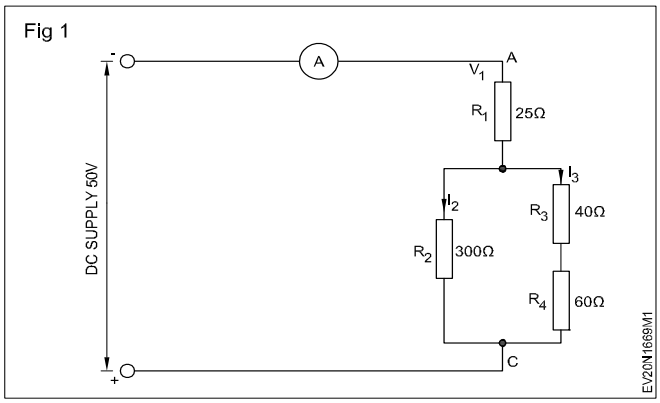

5 Calculate the value of R_T from V_s and I_s and record them in your note book and Compare with the value obtained in step 3.

Table 1

		V_{RI}	I_S	I_2	V_{R2}	I_3	V_{R2}	I_3	V_{R3}	R_3+R_4	$R_2 \angle\angle (R_3+R_4)$
V_s = 50V R_1 = 25W R_2 = 300W R_3 = 40W R_4 = 60W	Calculated Values										
	Measured Values										

Table 2

Calculated Values	$R_T = R_1 + R_1 \{R2 \angle\angle (R_3 + R_4)\}$ =
Measured Values	

— — — — — —

TASK 4: **Measurements of current flow by using Ammeter**

1 Connect the resistors in series and also wire up the voltmeters and ammeters as shown in Fig 1.

Fig 1

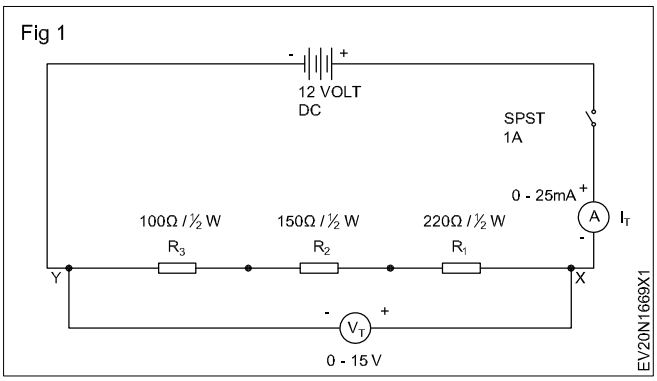

2 Measure resistance across each resistor using multi-meter and record in Table-1.

3 Measure the total resistance using multi-meter between the terminals X & Y.

4 Switch ON the RPSU and set the output voltage to 12 Volts.

5 Close the switch and measure the Current (I_T) and Voltage (V_T).

6 Enter the measured value in Table-1.

7 Switch OFF the supply. Reconnect the ammeter and voltmeter as shown in Fig 2.

8 Measure and record the Voltage (V_1) and Current (I_1) through Resistor R_1.

9 Switch OFF the supply. Reconnect the ammeter and voltmeter as shown in Fig 3.

© NIMI NOT TO BE REPUBLISHED

Fig 2

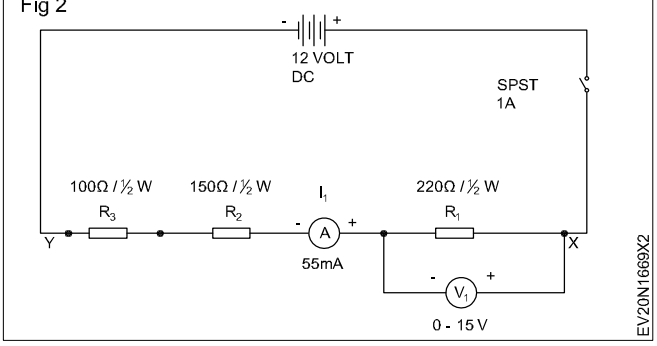

Fig 3

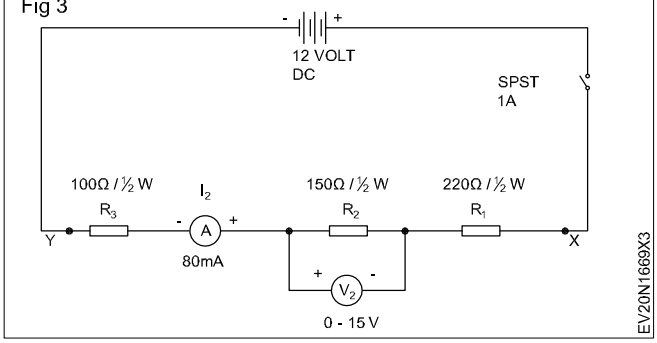

10 Measure and record the Voltage (V_2) and Current (I_2) through Resistor R_2.

11 Switch OFF the supply. Reconnect the ammeter and voltmeter as shown in Fig 4.

Fig 4

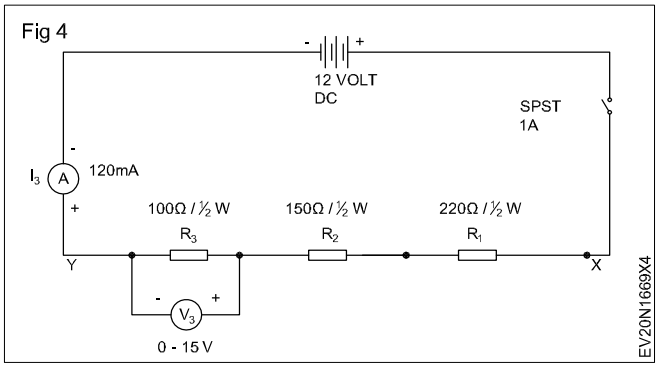

12 Measure and record the Voltage (V_3) and Current (I_3) through Resistor R_3.

13 Calculate total resistance, total current, total voltage using measured values.

14 Verify the laws of series circuit and Compare the values with the calculated values.

15 Get the work checked by the Instructor.

Table 1

R_1	R_2	R_3	R_T	V_T	I_T	V_1	I_1	V_2	I_2	V_3	I_3

© NIMI NOT TO BE REPUBLISHED

— — — — — — — —

TASK 5: **Testing DC circuit by using tesk lamp**

Safety precaution: Be cautious and your safety from electrical shock is your responsibility.

1 Skin the terminals of PVC wire and connect them into pendent lamp holder.

2 Fix the 12 V bulb into the lamp holder.

3 Use ohm meter test and ensure continuity of the constructed test lamp as shown in Fig 1.

Fig 1

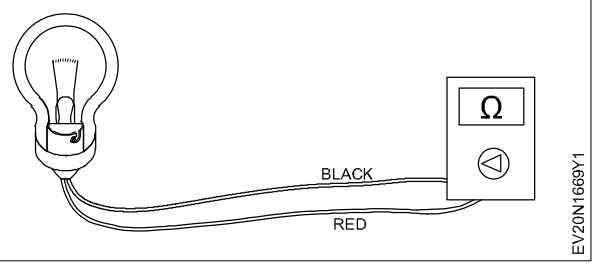

4 Connect the test lamp across live and neutral terminals of DC circuit of EV.

5 Switch ON the mains supply and observe the brightness of lamp.

6 Record the observation of Electric Vehicle's DC circuit's in Table - 1

Table - 1

Lamp brightness		DC Circuit healthiness
OK	**Not OK**	

7 Get the work checked by the Instructor.

— — — — — — — —

TASK 6: **Trouble shooting in electric vehicle wiring circuit**

- Study the electric vehicles manual wiring diagram
- Trace the each circuit of electric vehicle by wire colour code as shown in Figure 01
- Use the test lamp to check the circuit

Note: Before check the circuit continuity, ensure battery and fuse are in good condition

- Switch on the battery power and check the each circuit by test lamp
- If found any defects in a circuit rectify as your instructor's guideline.

© NIMI NOT TO BE REPUBLISHED

Fig 1

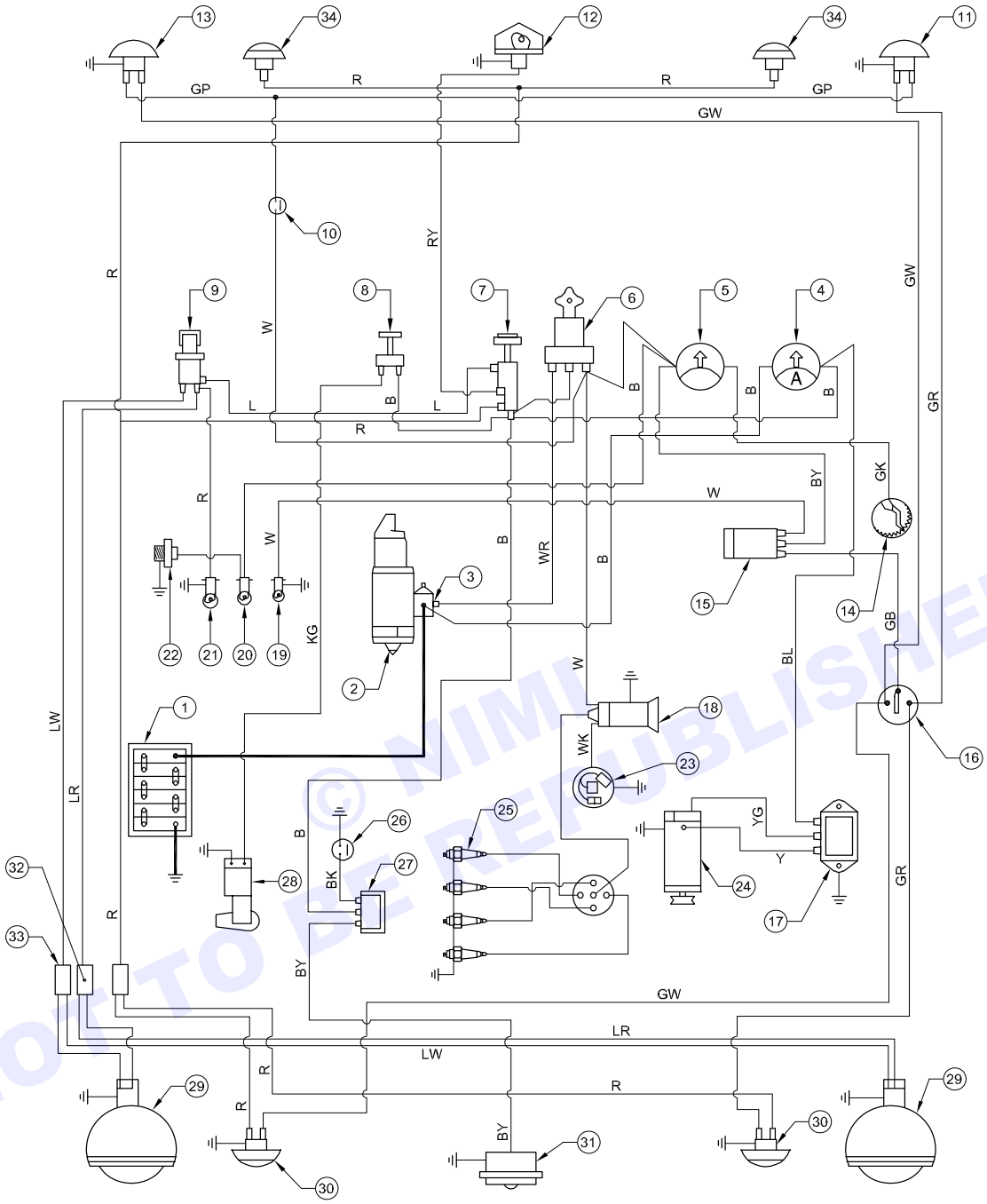

© NIMI NOT TO BE REPUBLISHED

Practice on study about new battery limiting factors, fault and testing

Objectives: At the end of this exercise you shall be able to
- **identify and test the different types of batteries.**

Requirements

Tools/Instruments

- Trainee's tool kit - 1 No.
- Hydro meter - 1 No.
- Multimeter - 1 No.
- Cell tester - 1 No.
- Test Lamp - 1 No.
- Soldering iron - 1 No.

Equipments / Machineries

- Electric Vehicle - 1 No.
- Lead acid battery - 1 No.
- Work bench - 1 No.

Materials

- Cotton waste - as reqd.
- Soap oil - as reqd.
- Soldering wire - as reqd.
- Soldering paste - as reqd.
- Asserted type diodes - as reqd.
- Asserted type transisters - as reqd.

PROCEDURE

TASK 1 : **Identify and test the different types of batteries**

- Select the different type of battery used in electric vehicle
- Park the vehicle on the shop floor
- Clean the vechile and open the bonnet of the vehicle
- Disconnect the battery cables
- Dismount the battery pack and remove the battery and place it on the work bench for battery test.
- Identify the different type of batteries as follows

  (a) Lead acid batteries for hybrid electric vehicle (Fig 1)

© NIMI NOT TO BE REPUBLISHED

Fig 1

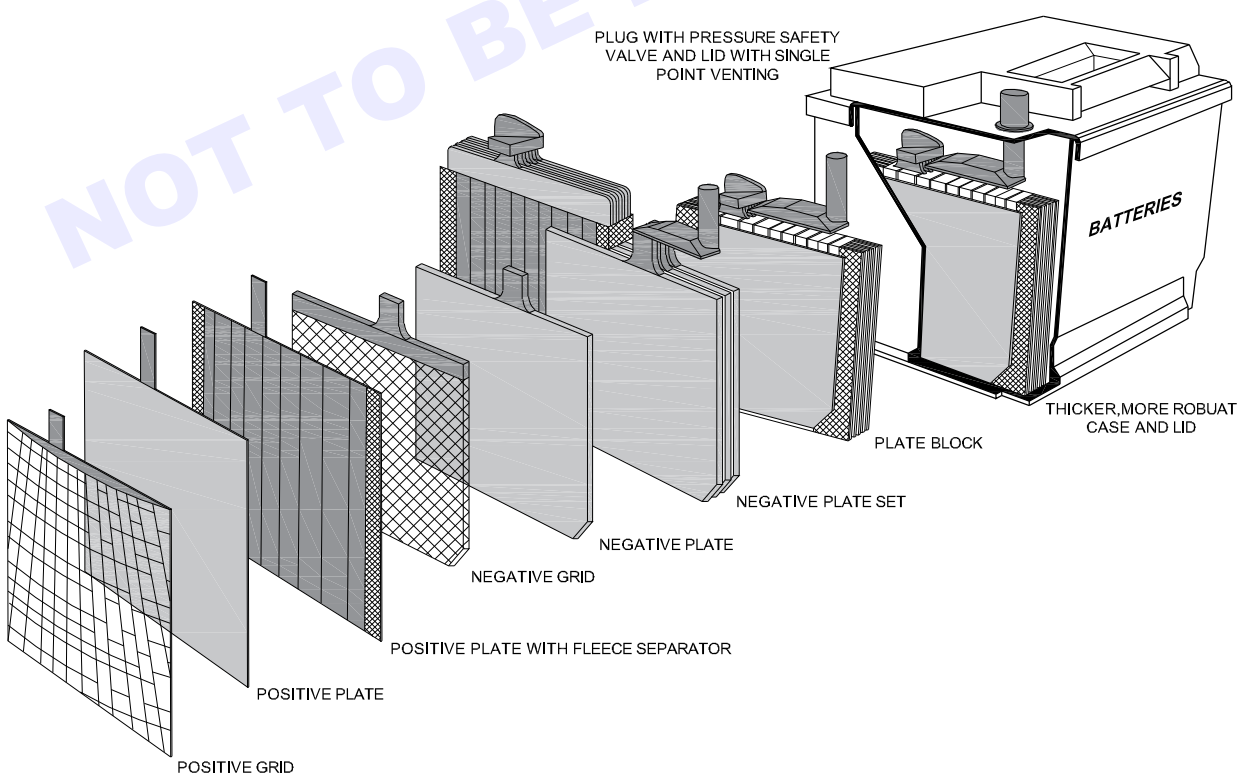

LEAD-ACID BATTERIES FOR HYBRID ELECTRIC VEHICLES AND BATTERY ELECTRIC VEHICLES

(b) Lithium ion electric car battery (Fig 2)

Fig 2

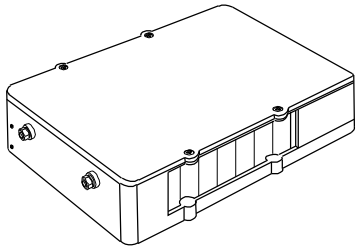

ELECTRIC CAR BATTERY LITHIUM-ION

MV20N211174H2

(c) Nickel - metal - hydrate electric car battery (Fig 3)

Fig 3

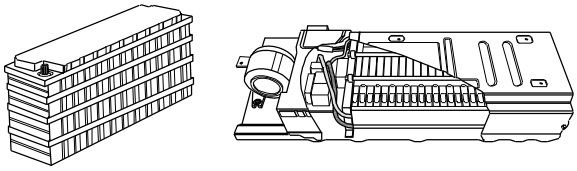

NICKEL METAL HYDRATE (NIMH) BATTERIES

MV20N211174H3

(d) Super capacitor energy storage electric car battery (Fig 4 & 5)

- Place the battery near the battery tester.
- Connect the lead acid or Lithium - ion battery for electric vehicle as below drawing with test equipment.

Fig 4

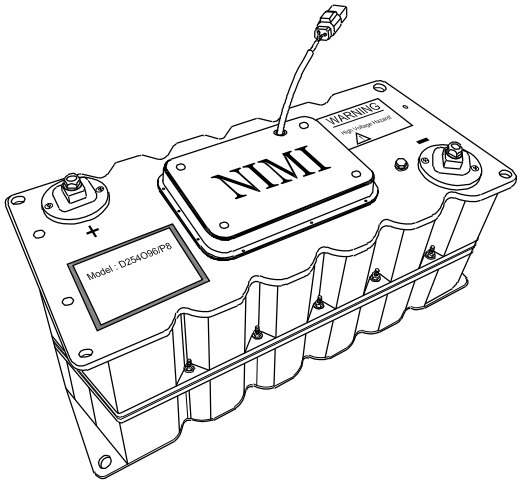

XLR SUPERCAPACITOR MODULE

MV20N211174H4

Fig 5

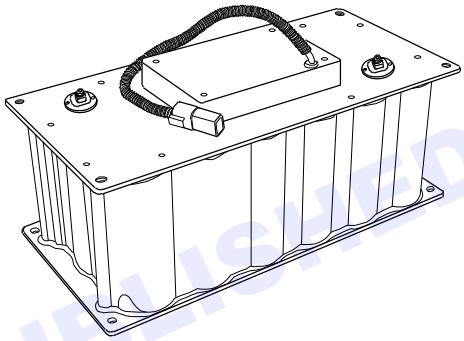

SUPER CAPACITOR 48V 165F GRAPHENE ENERGY STORAGE BATTERY

MV20N211174H5

© NIMI
NOT TO BE REPUBLISHED

Fig 6

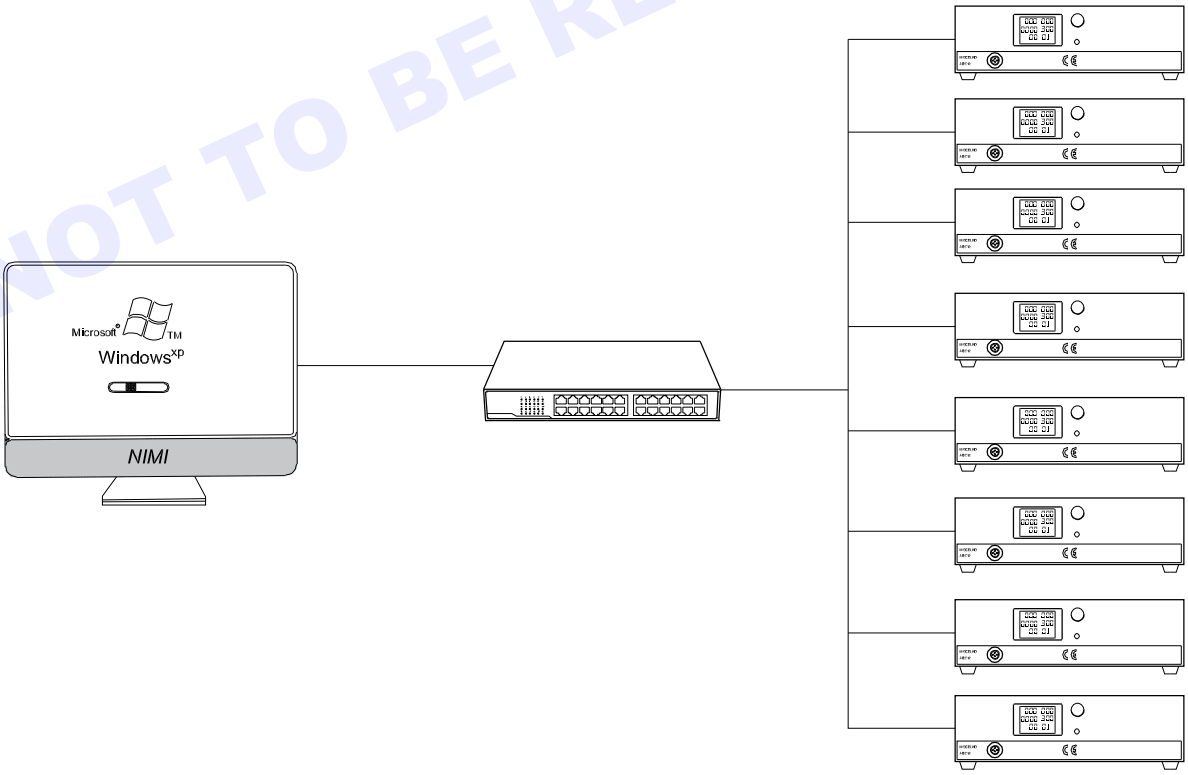

MV20N211174H6

Fig 7

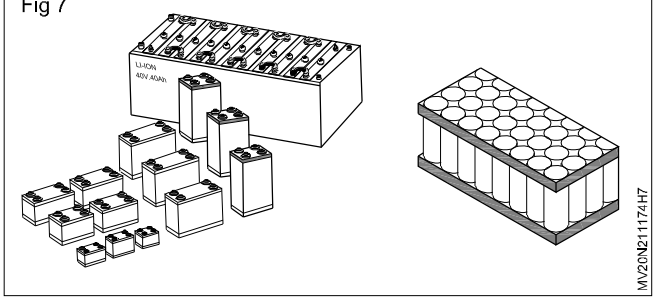

Fig 8

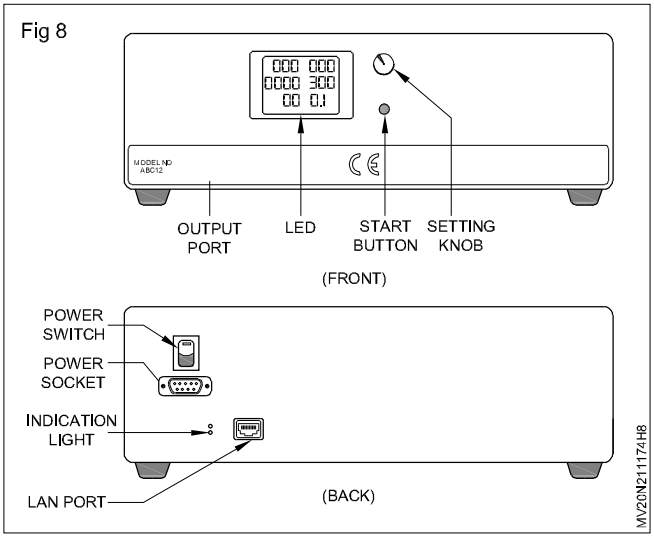

- Before test the battery, study and note the technical data from particular brand and type of battery.
- Select the battery type and manufactures details in test equipment software.
- Now switch ON the test equipment and test the following and note the reading displayed on the LED screen.

Fig 9

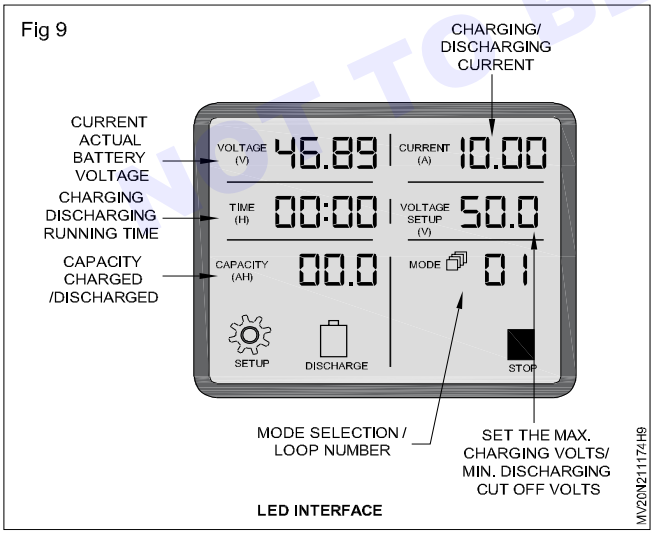

LED INTERFACE

- Test the battery current, voltage, power, load, terminal resistance , internal resistance, drive cycle simulation mathematical functions.
- Check the battery temperature by using thermistor or thermocouples to monitor battery cell temperature.
- Compare the reading showen in battery test equipment with battery manufacturers original technical specification data
- Disconnect the battery from the battery tester
- If found any variation, as per the objects, you can charge, repair, replace the battery.
- Use the supper capcitor to test the electrical.

Vehicle supper capacitor batteries include the applications as below

- Super capacitor charge/discharge cycles and advanced real world simulations.
- ON line DC - ESR & leakage current measurement
- Dynamic leakage current measurement.
- Self discharge voltage monitering.
- HPC measurements (Caulombic efficiency)
- Reverse polarity testing available with +/- voltage range.
- Connect the electric vehicle supper capacitor battery with selected battery tester and switch on the tester and test one by one as mentioned above.
- Note the battery tester LCD display reading in a paper and compare with actual battery capacity data given by the supper capacitor battery manufacturers.

Note : Many type of battery testers are available in the maket, you have to study the tester to be used for test the EV battery to avoid wrong decision taken.

- Use the Nickel metal hydrate battery, software based tester for check the electric vehicle nickel metal hydrate battery.
- Connect the nickel metal hydrate battery with battery tester
- Switch on the tester and test the following one by one and note the reading in separate paper.
  - Charging rate
  - Discharge rate
  - Battery life cycle
  - Electric vehicle drive cycle
  - Dynamic stress test
  - Cranking Amp tests
  - Battery pack test
  - Battery grid storage
  - Battery functional safety
  - Wireless action test (Charging)
  - EMF testing
  - Protacal testing
  - Climate testing
  - Ultra voilation radiation, corrosion test
  - Mechanical and material strength test
  - Glow wire test
  - Flamability test
- Compare the battery test reading with battery manufacturer specified technical data
- If need repair / Change / Replace the Nickel - metal - hydrate batteries depend up on the condition of battery.

© NIMI NOT TO BE REPUBLISHED

Skill sequence

Practice to clean and top - up of lead acid battery

Objectives: At the end of this exercise you shall be able to
- **clean the battery terminals and the body of the battery**
- **check the level of the electrolyte and top-up**
- **check the specific gravity of the electrolyte with hydrometer**
- **measure the cell voltage & battery voltage.**

PROCEDURE

TASK 1: **Cleaning and Top-up of lead acid battery.**

1 Clean the battery terminals, if corroded, with sandpaper: if sulphated, clean with wet cotton waste or with soda bicarbonate.

Do not damage the battery terminal by scraping with any metal strip.

2 Unscrew all the vent plugs and check the level of the electrolyte.

Do not clean the battery top surface keeping the vent plugs open. The accumulated dirt may fall inside the cells and form sediments.

3 Top up the electrolyte to the marked level in all the cells with distilled water.

No electrolyte to be used to top up battery.

4 Open seal cap of battery and keep Hydrometer inside.

Pump electrolyte up to reference mark.

5 Check the initial specific gravity of the electrolyte of each cell using a hydrometer (Fig 1).

Fig 1

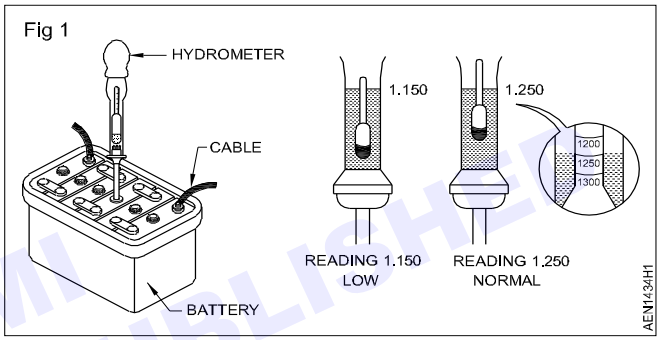

— — — — — —

TASK 2: **Check the specific gravity and open circuit voltage test**

1 Disconnect the negative cables first from the battery terminal.

2 Disconnect the positive cables from the battery terminal.

3 Remove the mounting clamp nuts.

4 Lift the battery from the vehicle.

5 Clean the top of the battery with water and cotton rag.

6 Clean the battery terminals by a non-metallic wire brush or emery-paper.

7 Check and top up the electrolyte level with distilled water. (if necessary)

8 Keep the battery on a leveled wooden workbench.

9 Remove all the vent plugs.

10 Hold the hydrometer vertically. (Fig 1)

11 Place the nose of the hydrometer in the cell. Ensure that the nose is dipped in the electrolyte.

12 Press the rubber bulb of the hydrometer.

13 Release it to draw the electrolyte upwards. Ensure that the electrolyte does not come into the bulb.

Fig 1

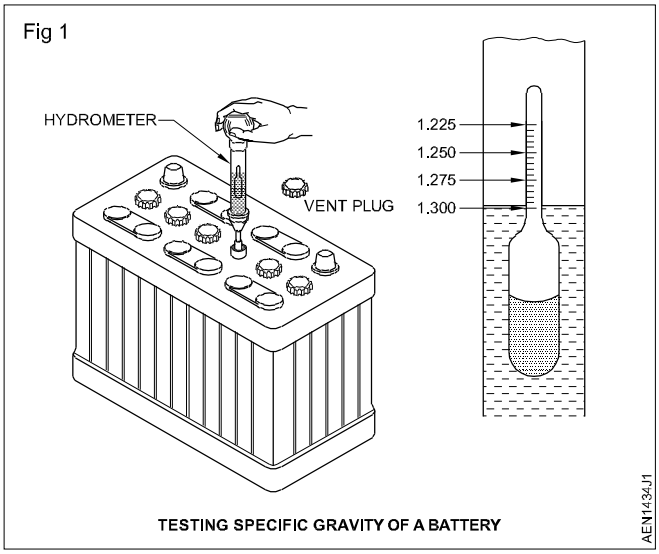

14 Note the float level which is floating in the electrolyte.

15 Record the reading in Table 1.

© NIMI NOT TO BE REPUBLISHED

Table 1

1	2	3	4	5	6

16 Repeat the same procedure for all the cells and record the readings.

The above reading should not vary more than 25 points between cells.

Protect your hands and clothes from the battery acid.

17 Connect the leads of the DC voltmeter (2) to the battery terminal (+ve to -ve). (Fig 2)

18 Take the reading from the voltmeter and record.

19 The voltmeter should read at least 13.2 volts per battery. After carrying out the above tests compare the readings with the manufacturer's specifications. Recharge/ replace the battery if it is in poor condition.

20 Clean the vent holes and tighten all the vent plugs.

21 Smear the battery terminals with Vaseline.

22 Place the battery in its position in the vehicle.

23 Tighten the battery mounting clamp nuts.

Fig 2

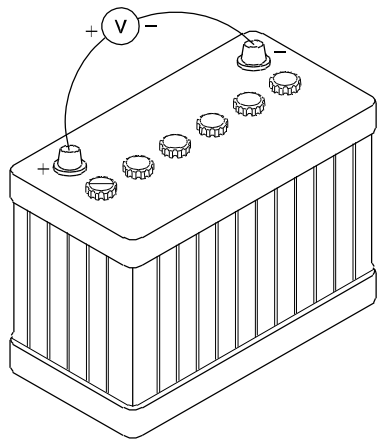

24 Clean the battery lugs with baking soda solution and water.

25 Connect the battery +ve cable first and tighten it.

26 Connect the battery -ve cable and tighten it.

27 Start the engine. Check whether the battery supplies sufficient current.

Disconnect the ground cable (-ve cable) first.

This will minimize the possibility of arcing and a resultant battery explosion.

© NIMI NOT TO BE REPUBLISHED

— — — — — —

TASK 3: **Checking a lead acid battery faults**

Note: If cell voltage is less than 1.6V, means that particular cell is called dead cell.

- Check the battery terminal and metal links for the following defects.
- Broken or lifted terminals.
- White or gray color sulphation on and near the terminal.
- Salt formation on the battery top.
- Cell links cracked.
- Check the air hole of vent plug.
- Check the specific gravity of electrolyte in each cell.
- Measure and record the voltage across each cell and total voltage across battery terminal.

— — — — — —

Practice on identify the electrical and electronics components in a Electric Vehicle

Objectives: At the end of this exercise you shall be able to
- **identify the electric and electronic components in a Electric Vehicle.**

Requirements

Tools / Instruments

- Trainee's tool kit - 1 Set.
- Vehicle Manual - 1 No.

Equipments / Machineries

- Electric vehicles - 1 No.

Materials

- Cotton Waste - as reqd.
- Soap oil - as reqd.

PROCEDURE

TASK 1: **Identifying the electrical and electronic components of Electric Vehicle (Fig 1 & 2)**

- Park electric vehicle on the shop floor.
- Study the vehicle manual and then start to indentify vehicle parts.
- Identify the plug in socket (1).
- Identify the electric fan (2).
- Identify the electric drive motor (3).
- Identify electric vacuum pump (4).
- Identify charger (5).
- Identify by the inverter (6).
- Identify the DC/DC converter (7).
- Identify wiring harness (8).
- Identify power distribution unit (9).
- Identify AC Compressor (10).
- Identify steering pump (11).
- Identify clutch activator (12).
- Identify battery pack (13).
- Identify additional radiator (14).
- Identify the vehicle dash board gauges and warming lights.
- Identify the vehicle switches.

© NIMI NOT TO BE REPUBLISHED

Fig 1

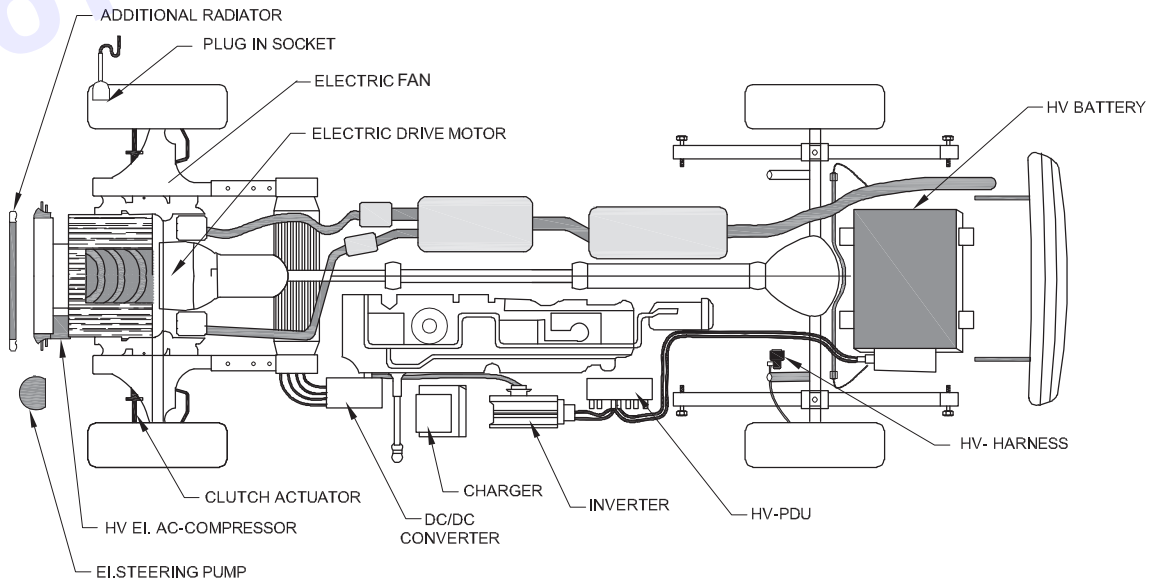

- Identify the vehicle sensors.
- Identify the Horn.
- Identify the wiper motor and upper blade.
- Identify the light and sensor.
- Write any 10 electrical and electronic components of electric vehicle and their function in Table 1.

Fig 2

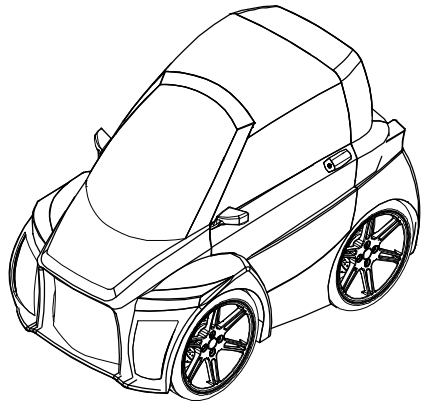

Table - 1

S. No.	Electric & Electronic components	Function of Electric & Electronic components	Remarks
1			
2			
3			
4			
5			
6			
7			
8			
9			
10			
11			
12			
13			

© NIMI NOT TO BE REPUBLISHED

Practice on removing and refitting a mechanical, electrical and trim components

Objectives: At the end of this exercise you shall be able to
- **remove and refit electrical components of Ev**
- **remove and refit a mechanical components**
- **remove and refit the trim component.**

Requirements

Tools / Instruments

- Trainee's tool kit - 1 Set.
- Vehicle Manual - 1 No.

Equipments / Machineries

- Electric vehicle - 1 No.

Materials

- Cotton Waste - as reqd.
- Soap oil - as reqd.

PROCEDURE

TASK 1: **Removing and refitting a electrical parts of EV**

- Select the electric vehicle for practice to removing and refitting electrical parts or components.
- Park the vehicle on shop floor and apply hand brake.
- Study the vehicle manual for identify the electrical components of a EV
- Same practice do for other electrical component to remove and refit it on the vehicle.

Note: The instructor has to show demonstration on removing and refitting a eletrical components of electric vehicle.

- Remove the battery terminal or disconnect the battery power supply
- Identify the electrical components location of EV.
- Disconnect the electric wire connection S_2 A_1 with electric component (Fig 1)

© NIMI NOT TO BE REPUBLISHED

Fig 1

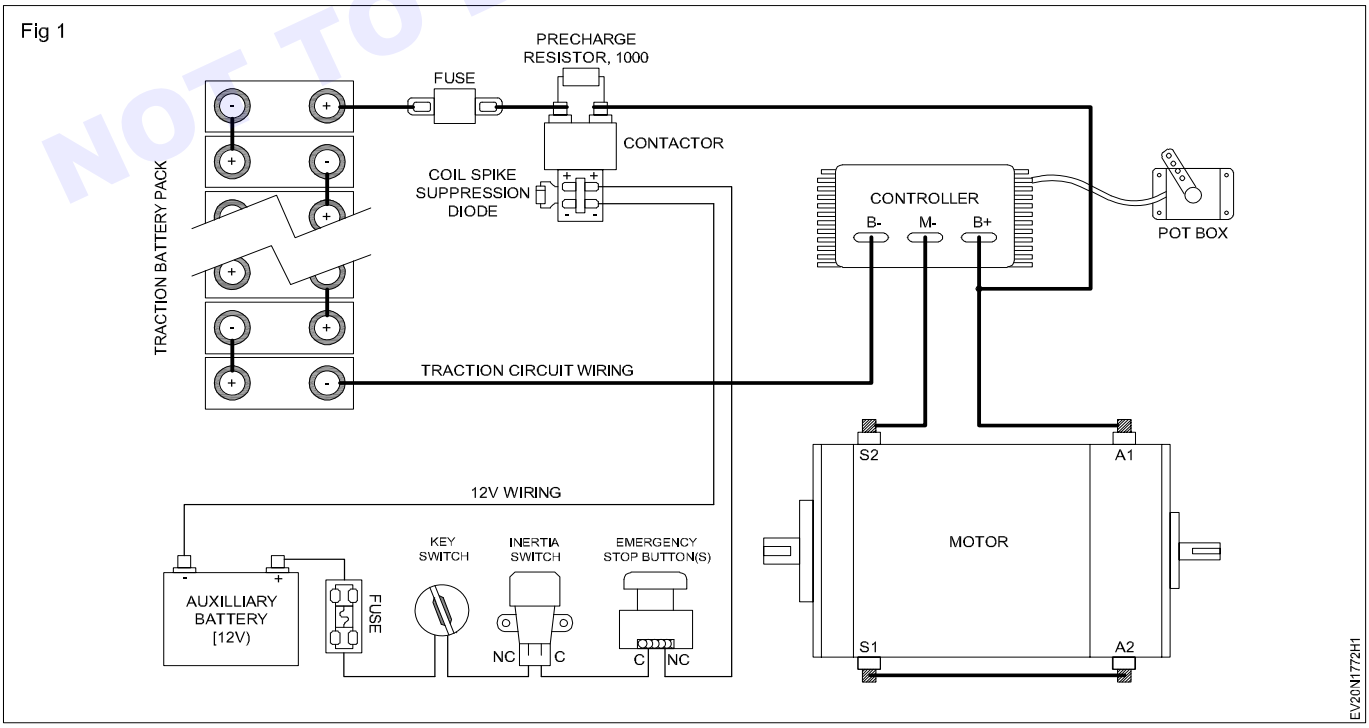

- Loosen the mounting screw/nut bolts S_1 A_2 of electric component.
- Carefully remove the components and place it on the work bench
- Clean the component and test it for their working condition.
- Repeat the reverse step of removing the component to refit the electrical component and follow the guide line of your instructor.

Fig 1

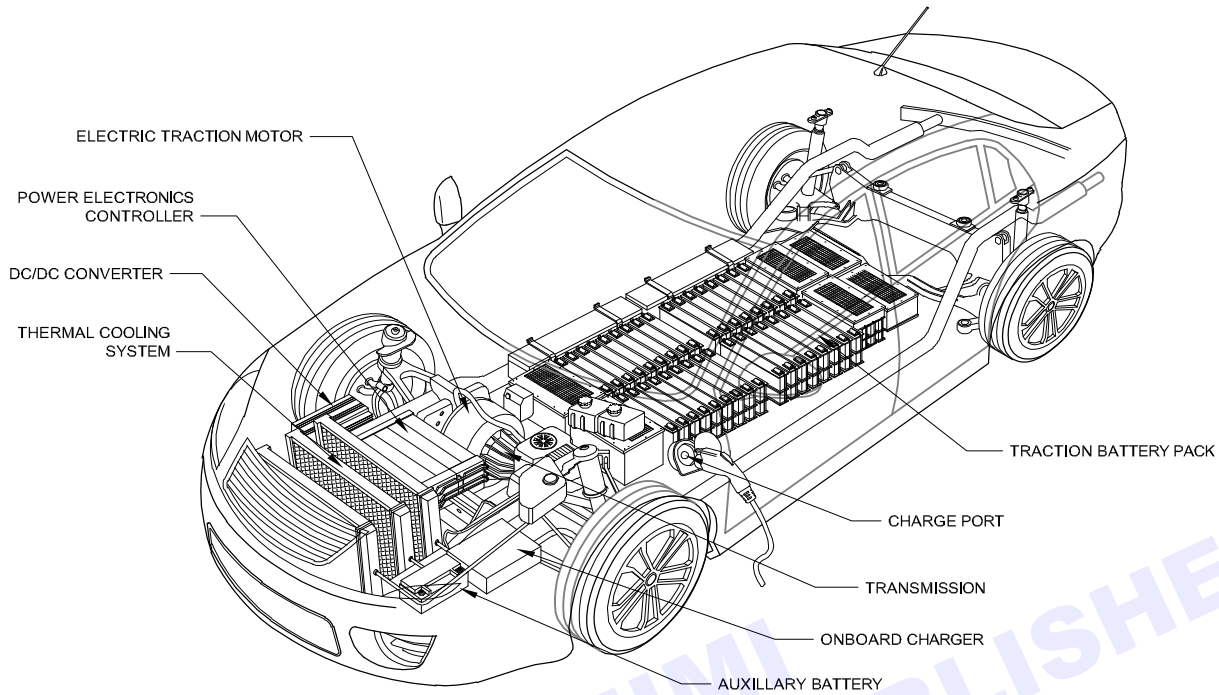

BATTERY ELECTRIC VEHICLE (BEV)

© NIMI NOT TO BE REPUBLISHED

— — — — — —

TASK 2: **Removing and refitting the mechanical component of electrical vehicle**

- Study the electric vehicle manual for achieve the knowledge of mechanical connections in a EV.
- Identify the mechanical component and their connections in a Vehicle (Fig 1).
- Identify the connection of traction motor, clutch, transmission and differential of drive axle.
- Identify the mechanical component's mountings type (Fig 2).
- Park the vehicle on the ramp and provide safety precautions.
- Loosen the propeller shaft mounting with transmission and differential.
- Remove the propeller shaft and place it on safe place.
- Loosen the clutch and transmission mountings.
- Carefully remove the clutch and transmission unit.
- Place it on the work bench.
- Clean the transmission components and check the serviceability of it.
- Fit the clutch and transmission unit with traction motor.
- Tighten the mounting bolts with recommended torque by the vehicle manufacturers.
- Mount the propeller shaft and tighten it with specified torque.
- Ensure all mechanical & trim components are properly fitted.
- Start the vehicle and bring it to road for testing.
- Drive the vehicle on the road for check the performance of vehicle.
- Ensure the electrical and mechanical component are working with good performance.

Fig 2

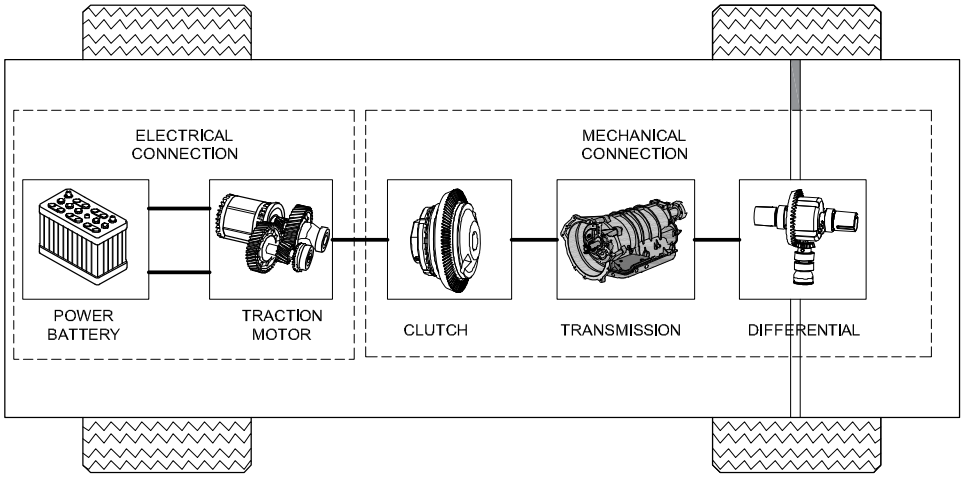

ELECTRIC DRIVE SYSTEM WITH A CLUTCH

EV20N1772.J2

— — — — — —

© NIMI NOT TO BE REPUBLISHED

Practice on identify the electric vehicle signaling system gauges & meters

Objectives: At the end of this exercise you shall be able to
- **identify the electric vehicle's gauges, meters and warning lights on panel board.**

Requirements

Tools / Instruments

- Trainee tool kit - 1 Set.
- Vehicle Manual - 1 No.

Equipment / Materials

- Electric vehicles - 1 No.

Material

- Cotton waste - as reqd.
- Soap oil - as reqd.

PROCEDURE

TASK 1: **Identifying the various gauges/instruments/warning lights provided on electric vehicles dashboard (Fig 1,2,3,4)**

Note: The instructor has to guide to identify the gauges and warning lights on dash board.

- Select any one type of electric vehicle.
- Park the vehicle on shop floor and apply parking brake.
- Clean the vehicle and open the door.
- Study the vehicle manual for achieve knowledge of dashboard gauges and warning lights.
- The dash board gauges and warning light design may be vary vehicle to vehicle model.
- Inspect the electric vehicle dash board gauges and instrument.
- Find the position of each gauge and meter in a dash. board (Fig 1)

Fig 1

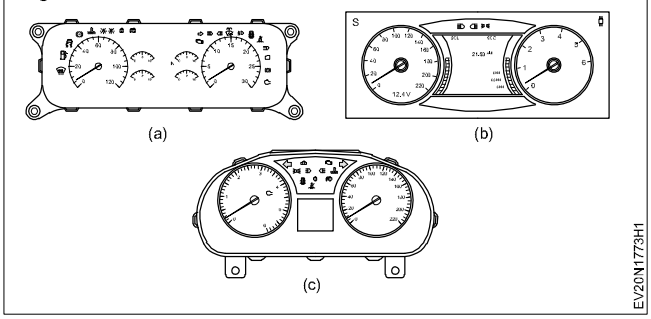

- Locate the position of each gauge and meter in a dash board (Fig 2)
- Understand the purpose of each gauge, meter, warning lights fitted in dash board (Fig 3).

Fig 2

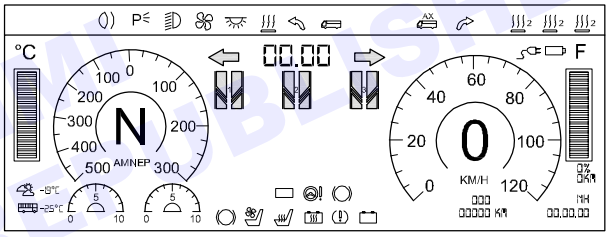

DASHBOARD INTERFACE

Fig 3

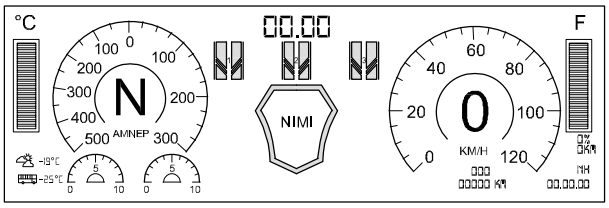

DASHBOARD INTERFACE WITHOUT ERROR

- Note their layout and arrangement in your note book.
- Switch on the ignition key and note the warning light. glow on the dash board, like parking brake light, door open, seat belt not wear, battery power etc (Fig 4).
- Check the indicator direction warning light brake light, head light, gauges light emergency light, etc (Fig 5).
- Start and move the vehicle, check. RPM meter, speedo meter, cooling fan and battery pack, motor temperature warnning etc.
- Check the wind washer, wiper, rear move warning etc.

© NIMI NOT TO BE REPUBLISHED

Fig 4

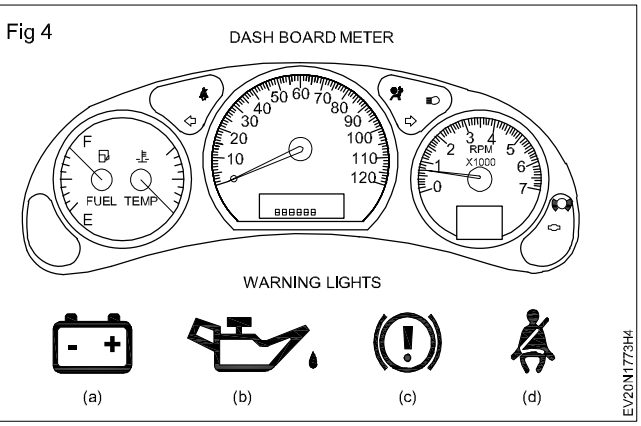

- Check the air bag, center lock, steering lock, window open warning signals or warning lights.
- Check the temperature scale inside of the EV.

Fig 5

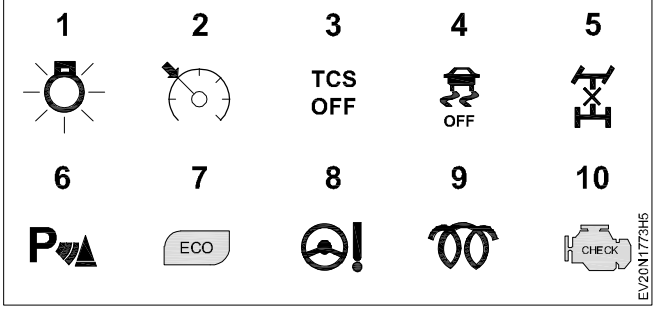

- Identify the trim display on the dash board.
- Check the battery power storage indicator.
- In case of plug in hybrid electric vehicle check the engine, temperature gauge and oil warning light.
- Note down the gauges and warning lights are provided in your vehicle in Table 1

Table - 1

S. No.	Dash board gauges/ Warning lights	Function of gauges/lights	Type of electric vehicle
1	Oddo meter		All vehicle
2	Tachometer		All vehicle
3	Traction motor temperature		BEV
4	I.C. Engine temperature		PHEV
5	Battery power indicator		BEV
6	Air bag warning lights		All vehicle
7	Direction indicator		
8	Cabin temperature indicator		
9			

Note: Always keep priority for safety while your are working on the vehicle.

— — — — — —

© NIMI NOT TO BE REPUBLISHED

Practice on fault diagnosis on electrical wiring harness of Electric Vehicles

Objectives: At the end of this exercise you shall be able to
- **diagnosis fault in electrical wiring harness of electrical vehicle**
- **rectifying electrical fault with wiring harness of electrical vehicle.**

Requirements

Tools / Instruments

- Trainee's tool kit - 1 Set.
- OBD scanner - 1 No.

Equipments / Machineries

- Electric vehicles - 1 No.
- EV wiring harness layout chart - 1 No.

Materials

- Cotton Waste - as reqd.
- Soap oil - as reqd.
- Wire connector - as reqd.
- Wire harness - as reqd.

PROCEDURE

TASK 1: **Diagnosing fault in electrical wiring harness of electric vehicle**

- Park the electric vehicle on the plain ground.
- Apply parking for safety.
- Study the vehicle manual for electrical wiring connection and cable colour code.

Note: The instructor has to indicate the wiring harness connection points to be check and diagnosis fault in electrical wiring circuit.

Demonstrate the method of fault finding in electrical wiring.

- Visually inspect the wiring harness for any physical damage.
- Use the digital multimeter or test lamp to check circuit wire continuity.
- If found any fault in a wiring circuit use a particular vehicle's model wiring diagram to trace the fault circuit.
- Examine the connector's and terminals for loose connection or corrosion or broken/bent pins.
- Check the fuses and wire joints and ground connections.
- Check the electrical components with in a circuit.
- Check the work performance of electrical components if found any fault repair or replace it.
- Check the motor controller and vehicle speed controllers wire connection for loose connection or disconnection (Fig 1).

Fig 1

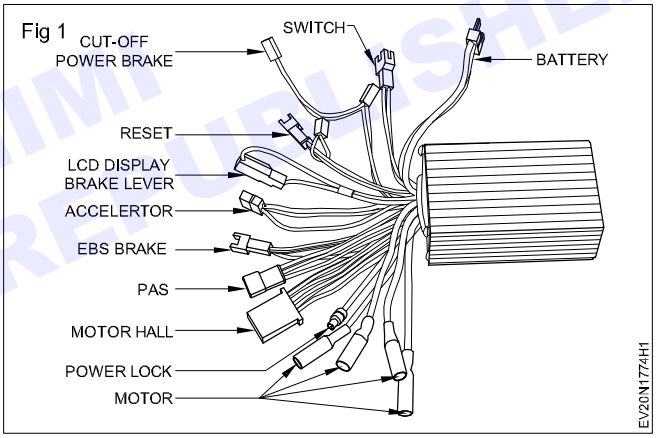

- Check the battery management circuit wiring and their connections as shown in diagram (Fig.2) (Battery protection, Battery monitor, Battery optimization etc).
- After fault diagnosis and repair the wiring circuit and components check it with your indicator.
- Ensure your vehicle's wiring harness is absolutely correct in working position.

Note: If the wire harness fault unable to identify or repair, consider to replace the entire wiring harness

- Switch off the battery power and use multimeter to measure the insulation resistance of wiring harness.

© NIMI NOT TO BE REPUBLISHED

Fig 2

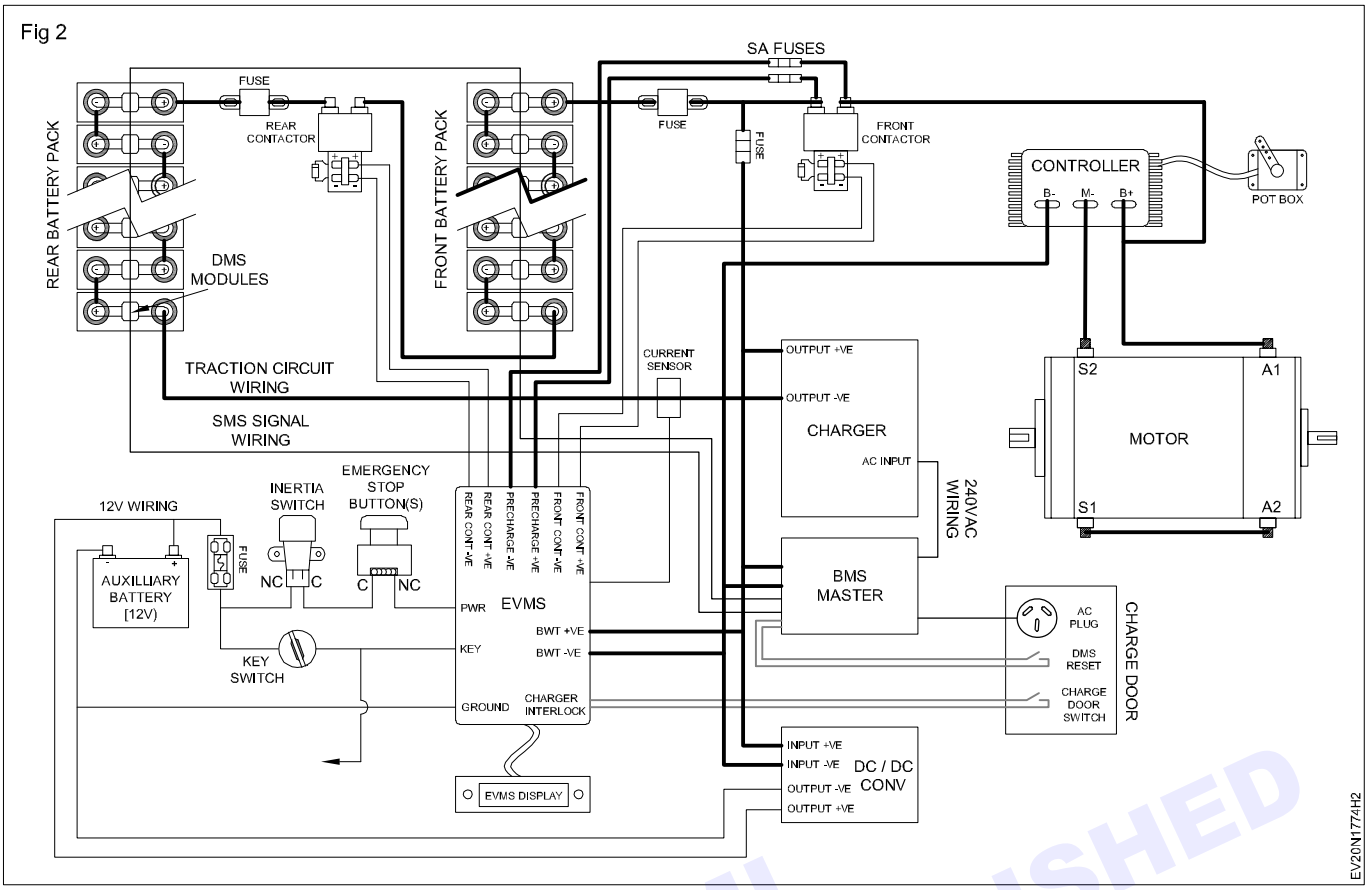

© NIMI
NOT TO BE REPUBLISHED

Practice on identify the switches and steering lock cum ignition switch

Objectives: At the end of this exercise you shall be able to
- **identify the switches in electric vehicle**
- **identify the steering lock cum ignition switch.**

Requirements

Tools / Instruments

- Trainee's tool kit - 1 Set
- Vehicle manual - 1 No.

Equipment / Materials

- Electric vehicles'' - 1 No.

Material

- Cotton waste - as reqd.
- Soap oil - as reqd.
- Switches - as reqd.

PROCEDURE

TASK 1: **Identify the switches type and classification**

Note: The instructor has to be demonstrate the electric vehicles dash board and battery management system switches type and their classification.

- Electric vehicle switches may be differ from vehicle manufacturer to manufacturer and vehicle model to model & module to module.
- Park the selected electric vehicle on the plain ground.
- Apply parking brake for safety purpose.
- Study the manual for achieve the knowledge of switches location, function and their types.
- Open the door inspect the dash board switches, power window switches, interior light switch night lamp switch, wiper switch, head light switch, fog light switch, indicator switch and parking light switch etc. (Fig 1).
- Inspect the car AC switches and their functions.
- Identify the type of switches like (key operating switch, push button switch, toggle switch, knob operated switch, rotary switch, mercury switch, isolator switch, pressure switch, temperature switch, proximity switch, limit switch, speed switch, joystick switch, selector switch, liquid level switch, liquid flow switch, sliding switch, thermal switch steering lock cum ignition switch etc. (Fig 3,4)

Fig 1

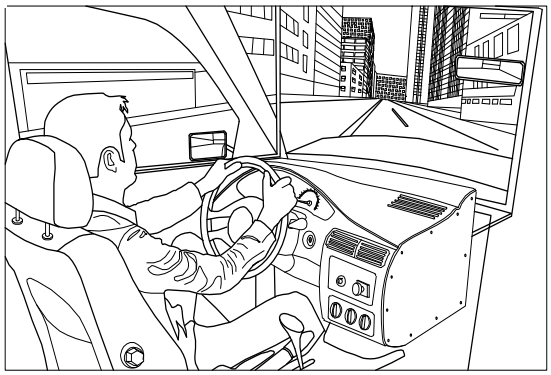

© NIMI NOT TO BE REPUBLISHED

Fig 2

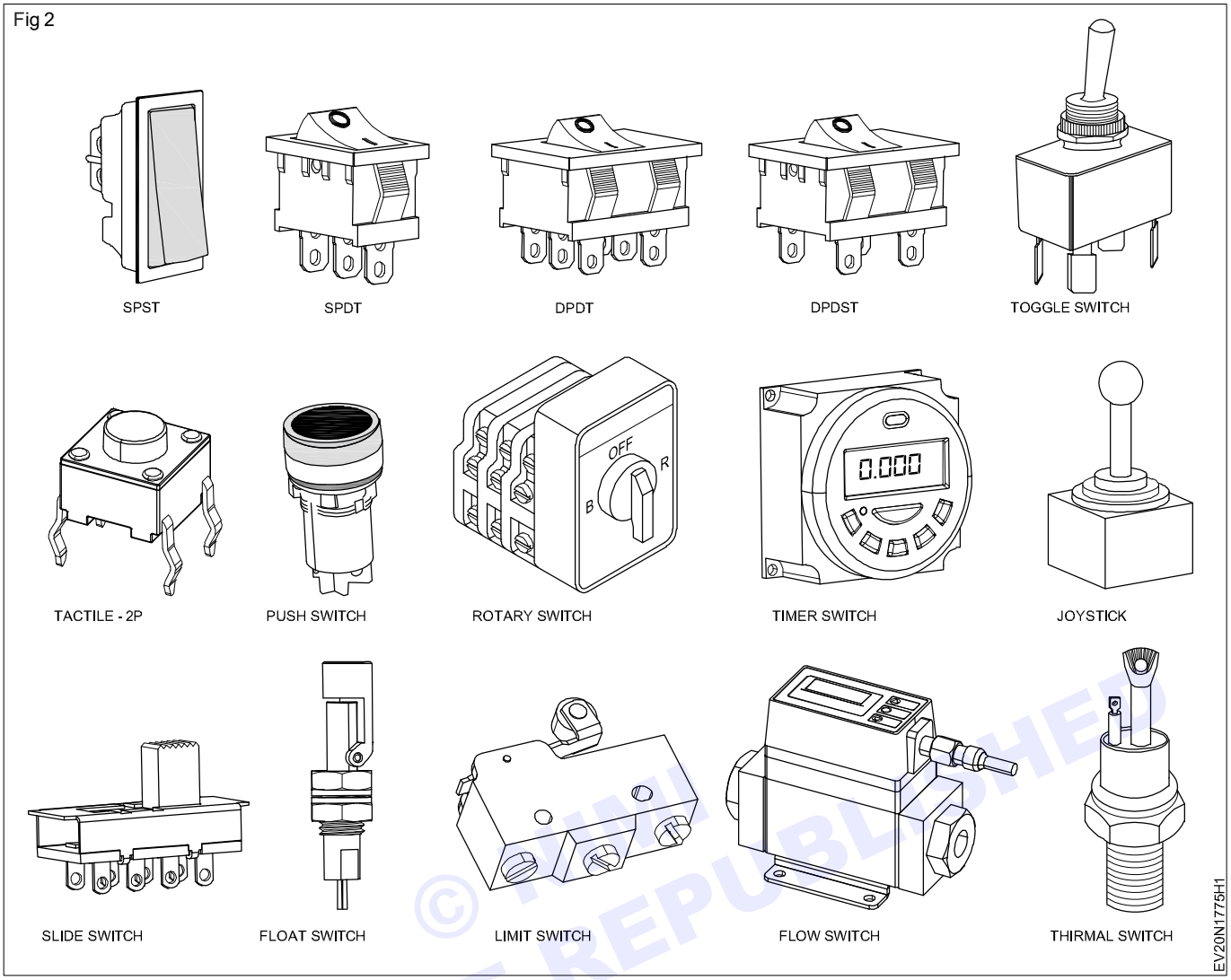

- Write down the vehicle switches type and their functions in the Table - 01.

Fig 3

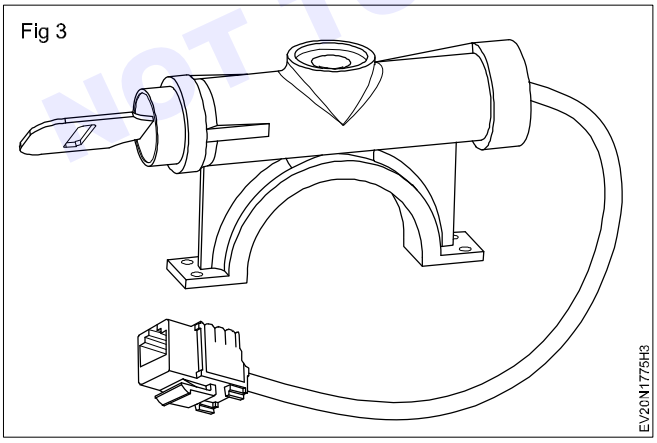

Fig 4

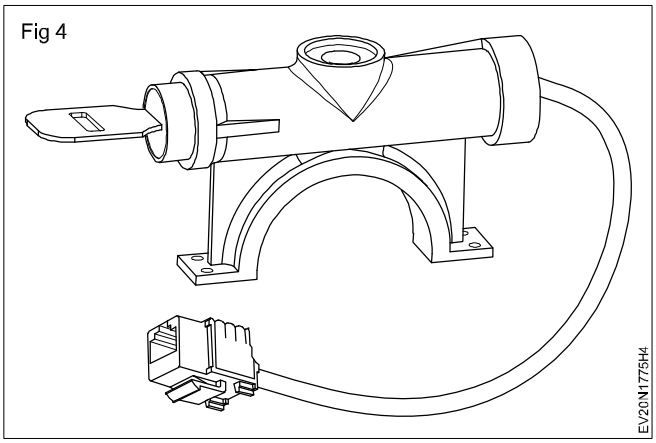

© NIMI NOT TO BE REPUBLISHED

Table - 1

Sl.No	Switches	Switches type	Functions of Switch	Remarks
1	Ignition switch			
2	Head light switch			
3	Diper switch			
4	Wiper Switch			
5	Center lock switch			
6	Parking light switch			
7	Indicator switch			
8	Traction motor ON/OFF switch			
9	Brake light switch			
10	Fog light switch			
11	Audio control switch			
12	Mirror adjustment switch			
13	Door glass operating switch			
14	Wind shield washer operating switch			
15	Interior light switch			
16	Door switch			
17	AC control switch			
18	Blower switch			
19	AC direction control switch			

© NIMI NOT TO BE REPUBLISHED

— — — — — —

Practice on identify the combination, fascia, head lamp leveling switch

Objectives: At the end of this exercise you shall be able to
- **identify the combination switch, fascia switches and head lamp leveling**
- **identify the mirror adjustment switches and front and rear fog lamp switches.**

Requirements

Tools / Instruments

- Trainee's tool kit - 1 Set.
- Vehicle manual - 1 No.

Equipments / Machineries

- Electric vehicle - 1 No.

Materials

- Cotton Waste - as reqd.
- Soap oil - as reqd.

PROCEDURE

TASK 1: **Identify the various switches used in electric vehicle**

Note: The instructor has to be locate the various switches related with practical Exercise.

- Park the electric vehicle for identify the switches.
- Trace the dash board switches location and their function with help of vehicle manual diagram.
- Identify the combination switch fitted with steering column which is consist of various functions like, head lamps, indicator wiper and diper switches etc (Fig 1).
- Identify the fascia switches provided in dash board and check its function.

Fig 1

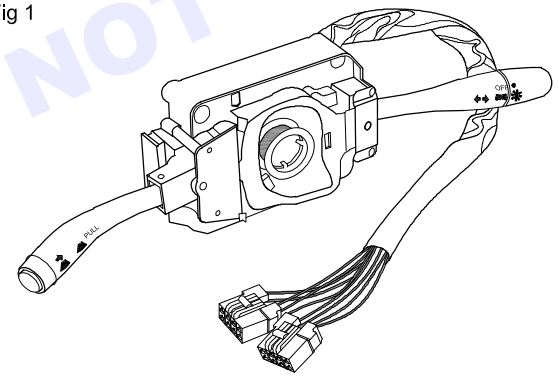

EV20N1776H1

- Identify the head lamp leveling switch and check its function (Fig 2).
- Identify the mirror adjustment switch and check it function (Fig 3).
- Identify the front and rear fog lamp switch and check its function (Fig 4).

Fig 2

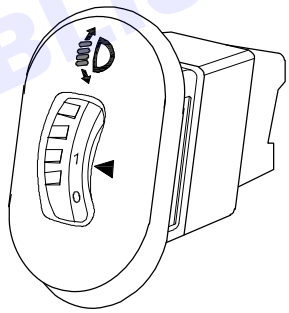

HEAD LIGHT LEVELING SWTICH

EV20N1776H2

Fig 3

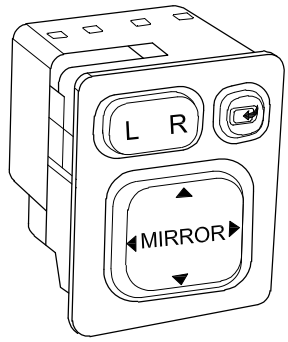

MIRROR ADJUSTMENT SWTICH

EV20N1776H3

- Note down the switches type and their functions in Table 01.

© NIMI NOT TO BE REPUBLISHED

Fig 4

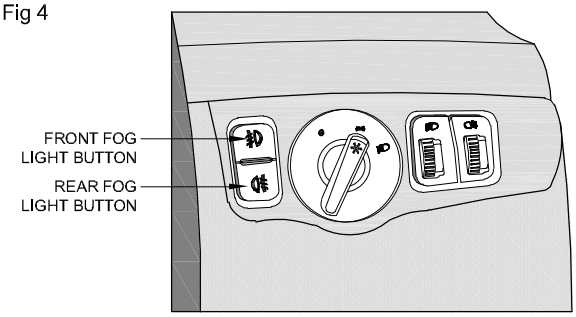

FOG LIGHT SWTICH

Table - 1

S. No.	Switches	Switches type	Function of the switch
1	Combination switch		
2	Fascia switch		
3	Head lamp leveling switch		
4	Side mirror adjustment switch		
5	Fog light switch		
6			
7			

© NIMI
NOT TO BE REPUBLISHED

— — — — — —

Practice on identify the hazard window winding, HVAC control panel switch and steering wheel switch

Objectives: At the end of this exercise you shall be able to
- **identify the hazard switch, window winding switch**
- **identify the rear window heating switch, HVAC control panel switches**
- **identify the steering wheel switches and their function.**

Requirements

Tools / Instruments

- Trainee's tool kit - 1 Set.
- Vehicle manual - 1 No.

Equipments / Machineries

- Electric vehicle - 1 No.

Materials

- Cotton Waste - as reqd.
- Soap Oil - as reqd.

PROCEDURE

TASK 1: **Identify the switches and their functions of Hazard, window winding, HVAC control, steering wheel switches.**

- Select the any type of electric vehicle.
- Park the vehicle on the shop floor.
- Open the vehicle front door and compare the switches location in dash board and steering wheel with a vehicle manual diagram.
- Switch on the ignition switch for power supply to lighting circuits.
- Identify the hazard switch and operate it to check the function of it (Fig 1).

Fig 1

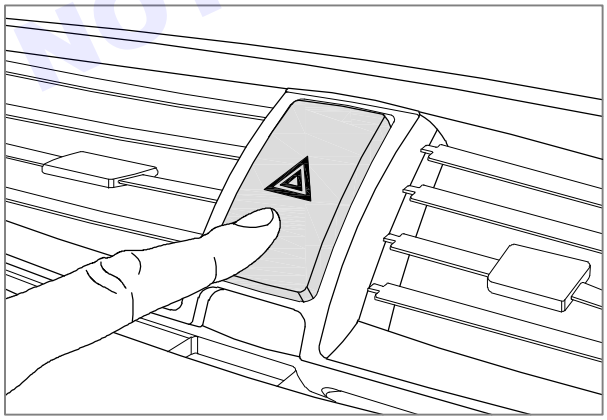

- Identify the window glass winding switch, which is located in door hand rest or food floor between front seat, check the function of each door glass winding switch (Fig 2).

Fig 2

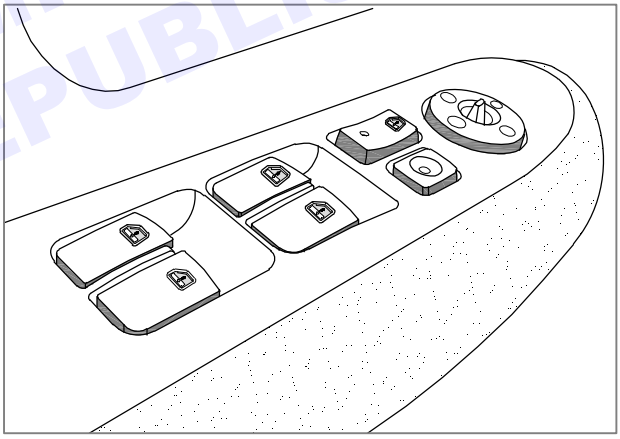

- Identify the heated rear window switch which is located in dash board (Fig 3).

Fig 3

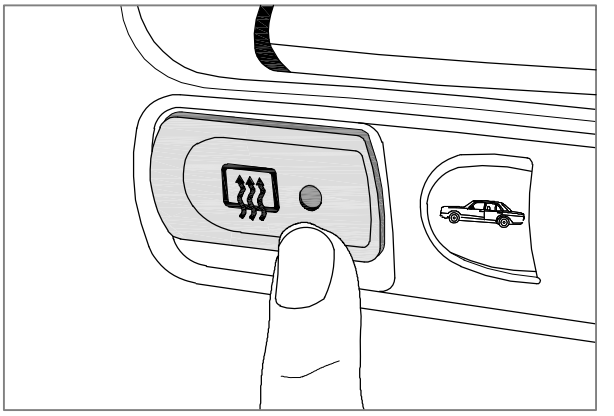

© NIMI NOT TO BE REPUBLISHED

- Identify the HVAC control panel switches (temperature, fan speed, airflow direction) and other climate control setting switch which is locate on the dash board (Fig 4).

Fig 4

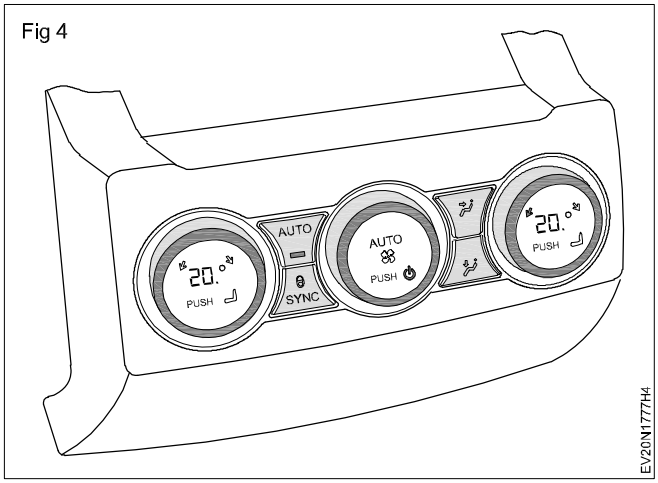

- Identify the steering wheel switch (Fig 5) which is used to operate the horn (switch is located on the steering wheel).
- Note down switches name and their function in Table-1

Fig 5

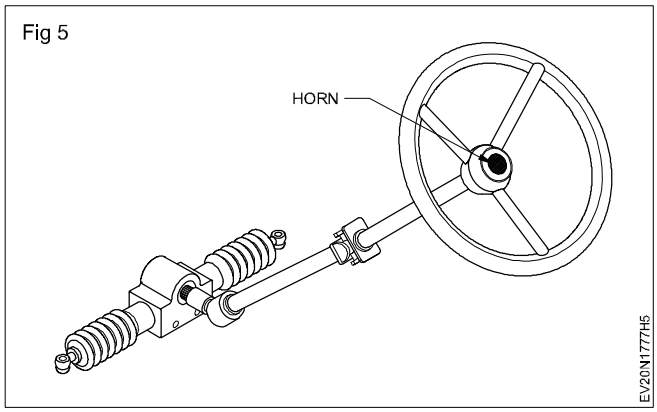

Table - 1

Sl.No	Name of the switch	Function of the switch	Switch location	Remarks
1	Hazard light switch			
2	Foot Window glass winding switch			
3	HVAC control panel switch			
4	Rear door glass winding switch			
5	Steering wheel switch			
6	Ignition switch			
7	Rear window glass heating switch			

— — — — — —

© NIMI NOT TO BE REPUBLISHED

Practice on remove and re-install the power door lock of a car

Objectives: At the end of this exercise you shall be able to
- **identify the basic parts of vehicle door assembly**
- **remove the door from the vehicle**
- **repair the power window regulator**
- **service the door lock and latches**
- **adjust the door glasses**
- **welded door hinges servicing**
- **bolted door hinges adjustment**
- **adjust the door opening and closing.**

Requirements

Tools / Instruments

- Trainee's tool kit - 1 Set.
- Vehicle manual - 1 No.

Equipments / Machineries

- Electric vehicles - 1 No.

Materials

- Cotton Waste - as reqd.
- Soap Oil - as reqd.
- Door lock - as reqd.
- Door latch - as reqd.
- Wire harness - as reqd.
- Door regulator - as reqd.
- Door hinges - as reqd.

© NIMI NOT TO BE REPUBLISHED

PROCEDURE

TASK 1: **Identify the basic parts of vehicle door assembly (Fig 1)**

Fig 1

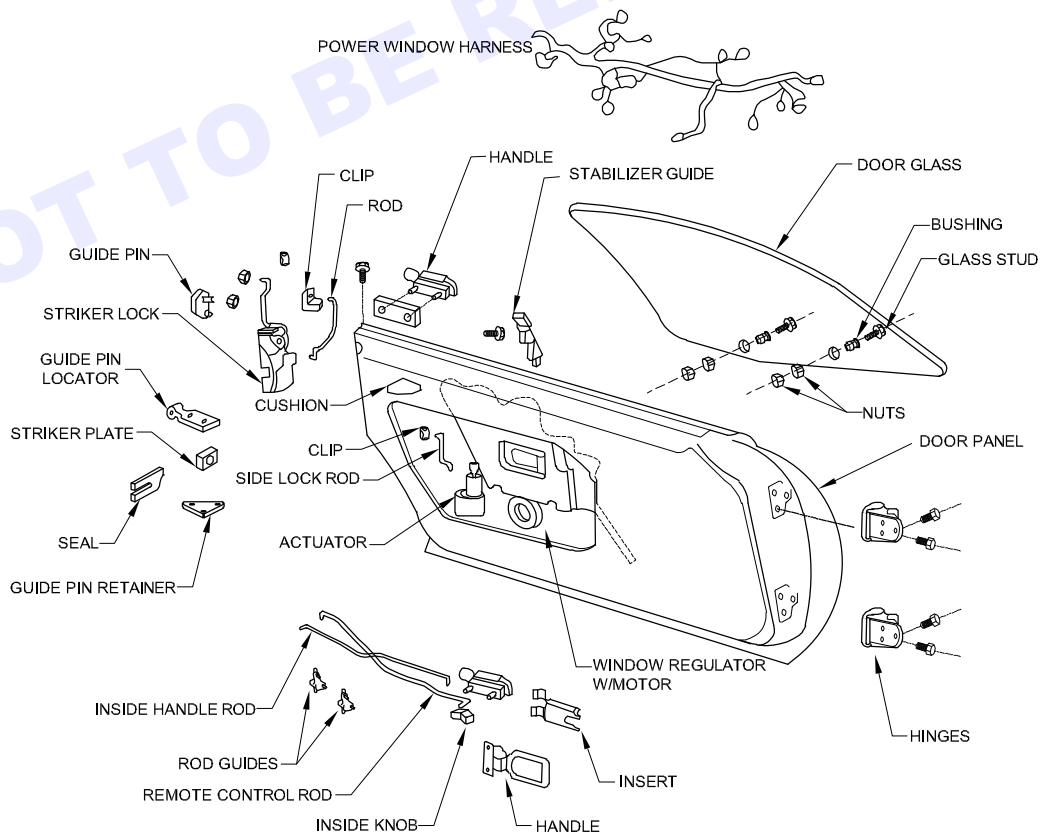

1 Remove the door pads and compare the parts with service manual.

2 Study the vehicle service manual for basic door parts.

3 Identify and locate the door glass.

4 Identify the door hinges.

5 Identify and locate the door panels.

6 Identify and locate the door handle.

7 Identify and locate the door inside knob.

8 Identify and locate the rod guides.

9 Identify and locate the inside handle rod.

10 Identify and locate the remote control rod.

11 Identify and locate the guide pin, seal, stricker plate, guide pin locator and retainer, stricker lock, clip, clip rod, handle.

12 Identify and locate the side lock rod and actuator.

13 Identify and locate window regulator or motor.

14 Identify and locate the door panel.

15 Identify and locate the door glass studs, bushing and nuts.

16 Identify and locate the power wire harness.

— — — — — —

TASK 2: **Remove the door from the vehicle (Fig 1 & 2)**

1 Park the vehicle on the auto body repair shop.

2 Open the door and disconnect the wiring going into the door frame.

3 Loosen the door hinges and use the floor jack to support the weight of the door.

4 Place a fender cover, rag, notched block of wood to protect the painted edge of the door.

5 Insert the rubber jack saddle to engage the bottom of the door flange.

6 Raise the jack just enough to take most of the weight off them hinges.

7 Balance the weight of the door on the jack to easily unscrew the hinge bolts.

8 Before removing last bolt of hinge ask the helper to hold the door and keep it from following off the jack.

9 Remove the door and move the door to a work bench.

10 Place the door outer panel down on the work surface.

11 Place the soft blanket under the door surface to prevent scratches in the finish.

Fig 1

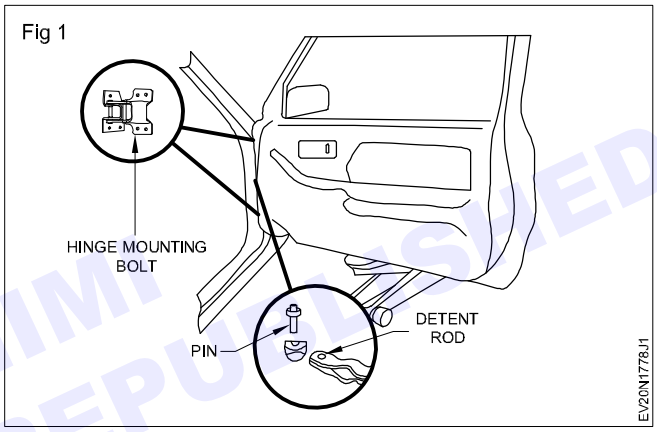

Fig 2

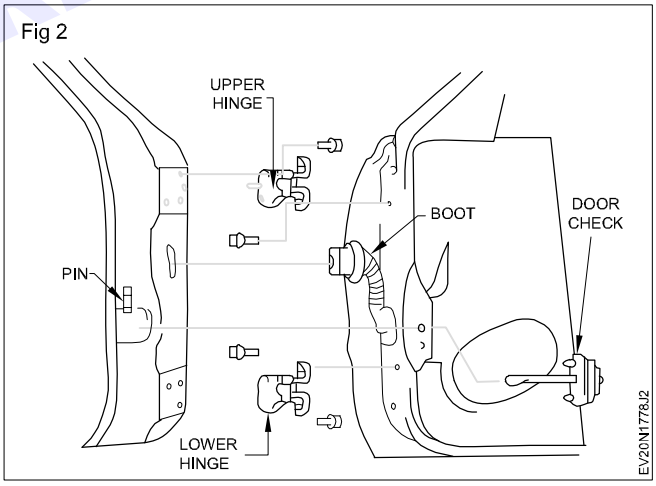

© NIMI NOT TO BE REPUBLISHED

— — — — — —

TASK 3: **Repair the power window regulator (Fig 1 & 2)**

1 Open the door and remove door glass regulator switch wire connection.

2 Remove the door glass stop (both ends).

3 Remove the outer and inner belt moulding.

4 Lift and remove the door glass and place in on the work bench on safely.

5 Dismount the regulator rear and front mounting bolts (sash).

6 Remove regulator with motor.

7 Visually inspect the regulator frame, front and center channels.

8 If found any damaged part replace it.

Fig 1

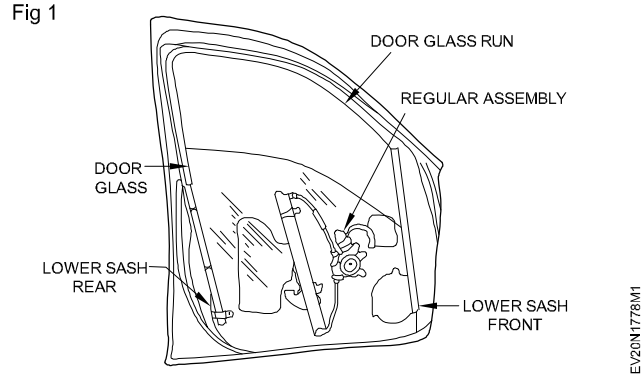

9 Connect power to the regulator motor and check the function of motor, if defective motor drive and inside gear drive, replace the power window regulator assembly.

10 Assemble the power window regulator in reverse order of dismantled.

11 Install the glass and bolt it to the regulator, fix the inner and outer bolt moulding adjust the door glass.

Fig 2

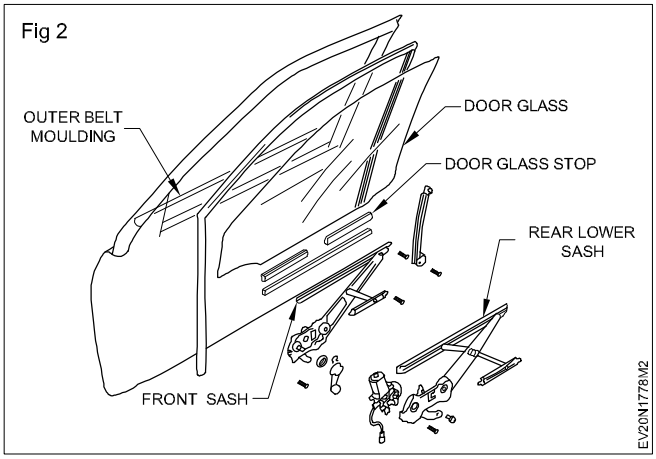

— — — — — —

TASK 4: **Service the door lock & latch**

1 Open the vehicle door and disconnect the door wire connection.

2 Remove the outer door handle.

3 Remove door panels and plastic cover.

4 Check the door lock function by operating inner lock operating hand leaver.

5 Visually inspect the door lock latch assembly and stricker function.

6 Check the door lock cylinder.

7 Check the door handle in & out side.

8 Check the trim plate.

9 Check the lock operating lever.

10 Check the inside handle rod.

11 Check the lock knob rod.

12 Check the lock knob.

13 Check the rod holder.

14 Check the door lock actuator.

Fig 1

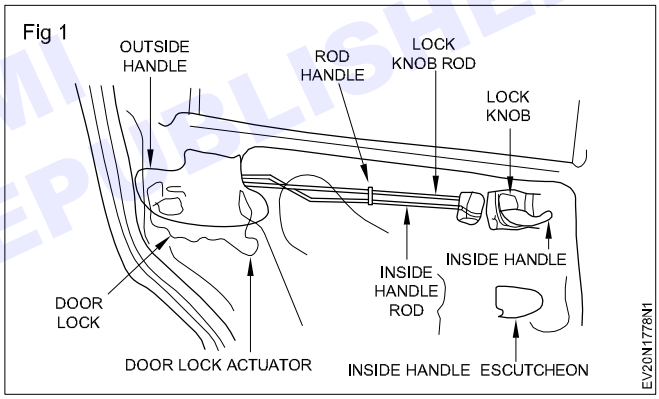

15 If found any damaged or unserviceable parts, replace.

16 Replace the door handle by raising the window and removing the interior trim, panel and water shield.

17 If remote control lock check power supply to solenoids and its linkage and wire connections. Replace damaged part or defective unit.

18 After service the door lock and latches ensure the door lock and latches are function properly (Fig 1).

— — — — — —

TASK 5: **Door and door glass adjustments**

1 With help of some one help hold the door on the floor jack.

2 Raise the jack until the door hinges are the same height as their bolt holes in the body.

3 Slowly slide the door until you can start the bolts tighten with your fingers.

4 Align the hinges against thier original positions and snug the bolts down but do not tighten them yet.

© NIMI NOT TO BE REPUBLISHED

5 After tighten the hinge bolts check the door operation.

8 Check the door frame if found any bend correct/ straighten the door frame.

9 Ensure the door closing is very well sealing with car body.

10 Check the door glass operation, if need adjust the glass regulator and glass side channels adjust the glass by loosening nut bolts of inside frame of the door.

11 If damage door glass channels, replace the channels and inside urethene strip and outside molding strip.

12 Close the door and check the air and water leakage into the passenger air and water leak into compartment straighten the door frame and replace rubber beadings.

— — — — — —

TASK 6: **Welded door hinges servicing (Fig 1)**

1 Open and close the car door to check the hinges operation.

2 If the door is need adjustment check bar hooks and stricker bar and U-shaped brackets engages the latch.

3 Remove the hinge pin by using a special spring compressed tool, ensure tools spring must be seated properly in tool before compressing it.

4 After removing hinge pin, the door can be removed from the vehicle.

5 To replace the welded door side, hinge first scribe the outline of the hinge on the door.

6 Center punch the spot weld and drill on pilot holes completely through the welds. Then weld is drilled out with a larger drill bit.

7 Deep enough to penetrate the hinge base to release the hinge from the panel.

8 Remove the hinge by use of chisel between the hinge and the base to break it from the panel.

9 Remove the body side hinge, use gas cutting torch to cut the tabs holding the hinge together.

10 Before use the gas cutting torch, protect the carpet and wires of car.

11 Use the grip-type pliers for holding the separated hinge tools are twisted or related to break them.

12 Once the tools are removed the pillar should be ground smoothen and prepared to receive the new part.

13 Measure the hinge location and transfer these measurements to the new hinge.

14 If hinge measurement is as specified limit then tabs weld the hinge tabs with pillar and then hang the door to check it is fit in the door opening and with surrounding panels.

15 If door is properly fit, remove the door and weld around the tack welded upper and lower hinge tabs.

16 Clean the welded area properly and apply sealer around the perimeter of th hinge. The area then be painted to the proper colour before the door is reinstalled.

© NIMI NOT TO BE REPUBLISHED

Fig 1

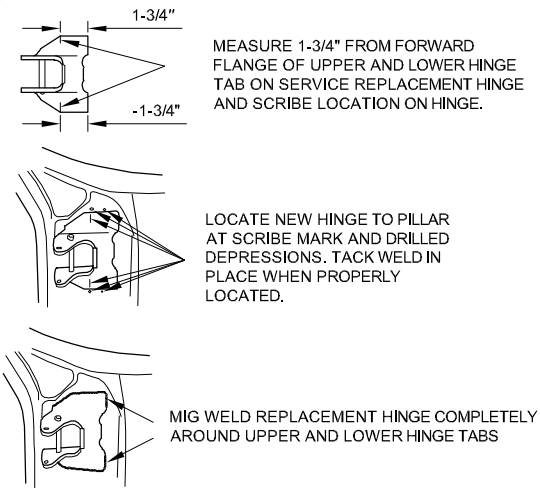

— — — — — —

TASK 7: **Bolted door hinge adjustment**

1 Check the door adjustment whether they close easily and do not rattle or leak.

2 If door is improper adjustment adjust the door stricker to engages the latch smoothly.

3 Adjust the front fender to fit the door.

4 Adjust the window by fit the weather stripping in hard top models.

5 Start from the front door to rear door.

6 If the vehicle door is having rubber door stops, you can rotate the door stops to screw them in ot out so that the door panel is flush with the adjacent panel.

7 All body gaps or edges must be parallel and equal width as shown in the Fig 1.

Fig 1

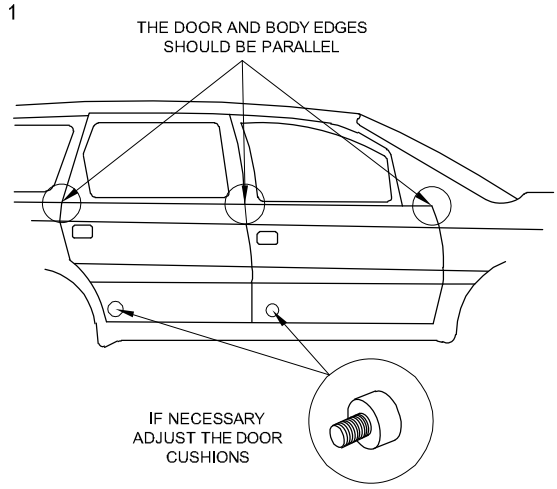

— — — — — —

TASK 8: **To adjust a door in its opening**

1 Remove the striker bolt so it will not interfere with the alignment process.

2 Determine which hinge bolts must be loosened to move the door in the desired direction. First, establish door height.

3 Loosen the hinge bolts just enough to permit movement of the door with a padded pry bar or jack and wooden block. On some vehicles, a special wrench must be used to loosen and tighten the bolts.

4 Move the door as needed. Tightent the hinge bolts. Then, check the door fit to be sure there is no bind or interference with the adjacent panel.

5 Repeat the operation until the desired fit is obtained.

6 Install the striker bolt and adjust it so that the door closes smoothly and is flush with the door is in the full quarter panel. Check that the door is in the full latched position, not the safety latch position (Fig 1).

Fig 1

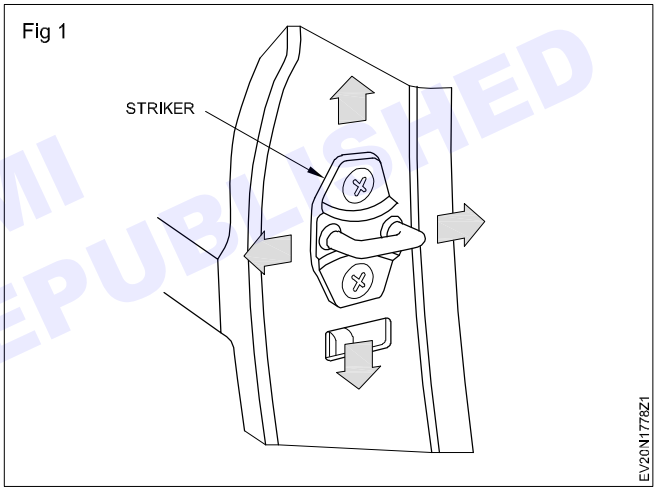

7 On all hardtop models, the door and quarter glass must be checked to ensure proper alignment with the roof rail and weathership.

— — — — — —

© NIMI NOT TO BE REPUBLISHED

Practice on identify wire gauge based on current capacity of wire

Objectives: At the end of this exercise you shall be able to
- **identify the wire gauge based on current capacity of wires**
- **refer tables and find current carrying capacity of wires.**

Requirements

Tools / Instruments

- Trainee's tool kit - 1 Set.
- Standard wire guage - 1 No.
- Pocket table book - as reqd.

Equipments / Machineries

- Electric vehicle - 1 No.

Materials

- Single strand wire pieces - as reqd.
- Rigid multi strand wire piece - as reqd.
- Flexible multi strand wire pieces - as reqd.

PROCEDURE

TASK 1: **Identifying the wire gauge based on current capacity of wire.**

Note: The instructor has to display the different types of wire gauge on the table and explain about the selection method of wire gauge.

- Study the wire gauge standard sizes and choose from them depending on the amount of current capacity to measure the wires.
- Visually check the size of cable given to you.
- Check the wire thickness that indicates cable , wire conductor that carries the electron flow.
- Select the suitable wire gauge to measure suitable conductor carrying capacity of specified current through the wires.
- The wire gauge helps you to know the current carrying capacity of the solid to ensure with the gauge to check thickness of the cable gauge.
- You can select 18 gauges wire for low voltage lighting up to 10 Amps.
- You can select 16 gauges light duty extension cord supporting up to 13Amps.
- You can select 14 gauges lighting circuit with 15 Amps.
- You can select 12 gauges support up to 120 Volt 20 Amps.
- You can select 10 gauges support up to 240 Volt 30 Amps.
- You can select 6 gauges support up to 40-50 Amps.
- You can select 4 gauges support up to 60 Amps.
- You can choose the AWG wire gauge.
- Comparative table below shows how they correlate
- Note : British standard wire gauge system (SWG) (Fig 1)
- American wire gauge system (AWG) (Fig 2)
- Both gauges differ in values as shown in the table. 1
- Measure the different wires and note down electrical wire gauges , size and their usage in table 2 (Fig 3)

Fig 1

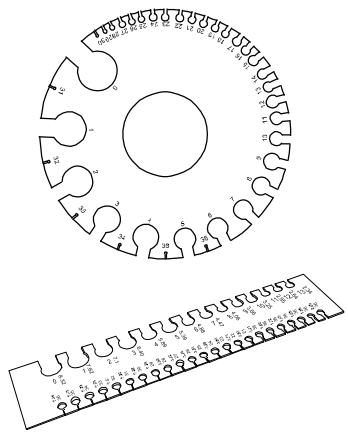

EV20N1879H1

Fig 2

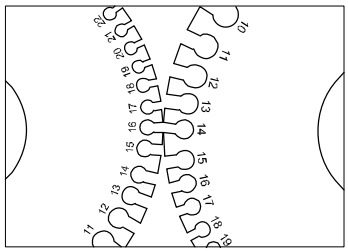

EV20N1879H2

© NIMI NOT TO BE REPUBLISHED

Fig 3

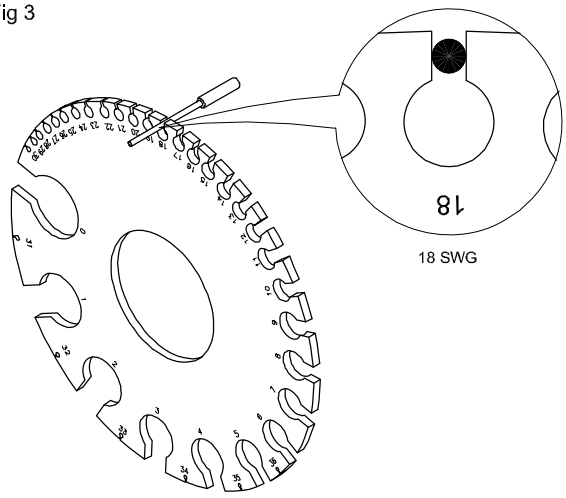

7654779357

Table 1

AWG			SWG	
S.No.	inches	mm	inches	mm
1	0.03249	8.25	0.324	8.23
2	0.2893	7.35	0.300	7.62
3	0.2576	6.54	0.276	7.01
4	0.2294	5.83	0.252	6.40
5	0.2043	5.19	0.232	5.89
6	0.1819	4.62	0.212	5.38
7	0.162	4011	0.192	4.88
8	0.1443	3.67	0.176	4.47
9	0.1285	3.26	0.160	4.06
10	0.1144	2.91	0.144	3.66
11	0.1019	2.59	0.128	3.25
12	0.0907	2.3	0.116	2.95
13	0.808	2.05	0.104	2.64
14	0.0720	1.83	0.092	2.34
15	0.0641	1.63	0.080	2.03
16	0.0571	1.45	0.072	1.83
17	0.0508	1.29	0.064	1.63
18	0.0453	1.15	0.056	1.42
19	0.0403	1.02	0.048	1.22

AWG			SWG	
S.No.	inches	mm	inches	mm
20	0.059	0.912	0.040	1.02
21	0.032	0.813	0.036	0.914
22	0.0285	0.724	0.032	0.813
23	0.0253	0.643	0.028	0.711
24	0.0226	0.574	0.024	0.610
25	0.0201	0.511	0.022	0.559
26	0.0179	0.455	0.020	0.508
27	0.0159	0.404	0.0180	0.457
28	0.0142	0.61	0.0164	0.417
29	0.0126	0.320	0.0148	0.376
30	0.0113	0.287	0.0136	0.345
31	0.0100	0.254	0.0124	0.315
32	0.0089	0.226	0.0116	0.295
33	0.0071	0.180	0.0100	0.254
34	0.0063	0.160	0.0092	0.234
35	0.0056	0.142	0.0084	0.213
36	0.0050	0.127	0.0076	0.193

© NIMI NOT TO BE REPUBLISHED

Table 2

S. No.	SWG/AWG wire gauge	Cable Diameter (inches)	Cable Diameter (mm)	Conductor cross sectional area (mm)	Current Carrying Capacity
1					
2					
3					
4					
5					

Practice on select the fuse for circuit protection

Objectives: At the end of this exercise you shall be able to
- **select the fuse of electrical circuit protection**

Requirements

Tools / Instruments

- Trainee's tool kit - 1 Set.
- Fuse rating table - 1 No.
- Multi meter - 1 No.

Equipments / Machineries

- Electric vehicle - 1 No.

Materials

- Cotton waste - as reqd.
- Soap oil - as reqd.
- Fuse - as reqd.
- Fuse wire - as reqd.
- Glass tube fuse - as reqd.

PROCEDURE

TASK 1: **Select the suitable fuse to protect the electrical circuit of a vehicle.**

Note: The instructor has to demonstrate the method to select the suitable fuse type, rate etc.

- Park the vehicle on the shop floor.
- Study the vehicle manual to identify the fuse location on the vehicle.
- Check the vehicle electrical circuit and fuse location.
- Identify the fuse box location and remove the cover if provided on the fuses.
- Remove the fuses one by one and check fuse continuity by visually or by using multi meter or test lamp. (Fig 3)
- If fuse continuity broken, Check the value of fuse rating and compare it , manual fuse rating.
- Select the same type and same value of fuse .
- Visually check the continuity of a new fuse and fix its location and check the circuit continuity.
- As it is check the remaining fuses as following above steps.

Fig 1

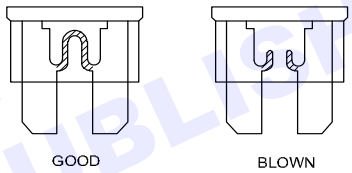

CHECKING AND REPLACING FUSES

EV20N1880H1

Fig 3

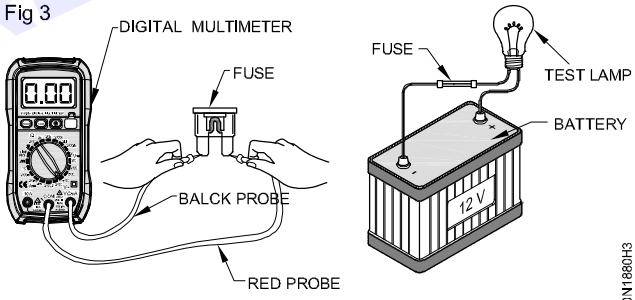

TEST-1 BY USING MULTIMETER TEST-2 BY USING TEST LAMP

EV20N1880H3

Fig 2

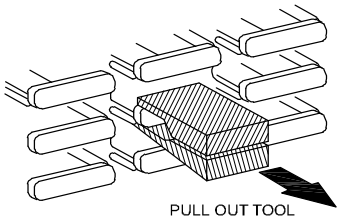

CHECKING AND REPLACING FUSES

EV20N1880H2

© NIMI NOT TO BE REPUBLISHED

— — — — — —

Practice on diagnose fault and carry out remedial actions of horns, wiper motor and power window

Objectives: At the end of this exercise you shall be able to
- **identify fault in horn circuit**
- **identify the fault in wiper motor**
- **identify the fault in power window.**

Requirements

Tools / Instruments
- Trainee's tool kit - 1 set.
- Vehicle manual - 1 No.

Equipment / Materials
- Electric vehicle - 1 No.

Material
- Wire harness - 1 No.
- Connectors - as reqd.
- Insulation tape - as reqd.
- Cotton waste - as reqd.
- Soap oil - as reqd.
- Fuse - as reqd.

PROCEDURE

TASK 1: **Identify fault in horn circuit**

1 Locate the horn assembly.

2 Check the horn connections.

3 Check the function of the horn assembly.

4 If found defective horn, remove the horn electrical connections.

5 Dismount the horn mounting bolts.

6 Remove the horn assembly from the vehicle.

7 Select the horn assembly.

8 Mount the horn assembly on the vehicle and connect horn wires and test and tune up the horn.

© NIMI NOT TO BE REPUBLISHED

Horn trouble shooting

Horn not operate		
S. No.	**Causes**	**Remedies**
1	Horn push button defective	- Replace
2	Horn contact point burnt	- Replace
3	More gap between horn point	- Adjust
4	Wire disconnected	- Connect wire
5	Loose earthing contact	- Tighten the earthen wire
6	Damaged diaphragm	- Replace

Poor sound quality		
S. No.	**Causes**	**Remedies**
1	Low voltage supply	- Check battery, charging system
2	Improper horn tone adjustment	- Adjust for proper turning
3	Wire lose connection	- Tighten the wire connection
4	Improper contact of horn switch	- Replace
5	Horn diaphragm assembly defective	

Horn sounds continuously		
S. No.	**Causes**	**Remedies**
1	Horn switch defective	- Replace
2	Horn magnetic switch defective	- Replace
3	Power continuous supply	- Disconnect the power

— — — — — —

TASK 2: **Identify the fault in the wind shield wiper**

1 Check the wiper switch and blade
2 Check the wind shield and water sprayer
3 Check the electrical wire connections
4 Check the wiper blade movements.

Trouble shooting

Wind shield wiper not work		
S. No.	**Causes**	**Remedies**
1	Wiper blade un serviceable	- Replace
2	Wiper motor not work	- Replace/ repair
3	Wiper blade loose mounting	- Tighten the mounting
4	Wiper motor loose fitting	- Tighten the loose fitting
5	Wiper motor gear teeth worn out	- Replace the gears
6	Wiper connecting rod bend	- Replace
7	Wiper motor noise	- Replace /Lubricate
8	Wiper motor armature short circuit	- Replace armature
9	Wiper switch defective	- Replace
10	Wiper blade miss- alignment	- Adjust the wiper blade

© NIMI NOT TO BE REPUBLISHED

Trouble shooting in wind shield water sprayer		
S. No.	**Causes**	**Remedies**
1	No water in wash container	- Fill water
2	Washer operating switch defective	- Replace
3	Washer spray jet nozzles defective	- Replace
4	Water leak in jet nozzle connection	- Replace
5	Washer water pumping motor defective	- Repair/ replace
6	Wire loose connection	- Tighten the water connection

— — — — — —

TASK 3: **Diagnose the fault of power window**

1 Switch on the ignition key
2 Locate the power window switches
3 Check all the power window operating switches function
4 Operate the power window switches one by one
5 If found switch is defective replace it

6 Check the window glass movements / operation, if found the improper operation of power window glass then check the door glass channels and power window motor.

7 If window glass door channels are un serviceable replace it.

8 When power window glass operating switch is on but there is no window glass movement , means motor is defective

9 If motor is running properly but glass is not lifting means window glass lifting regulator is defective, replace it.

10 Check the power window for external and internal damages, if any major damage in door, replace the door with new one.

— — — — — —

TASK 4: **Diagnose the power door lock problems**

1 Remove the door lock control switch

2 Disconnect the probes

3 Check whether power is available with the probes

4 If the power is not available with the probes, trace the circuit till the problem is located (Fig.3 & 4)

5 Check the switch for continuity. If there is no continuity, switch faulty. Replace the switch

6 Remove the solenoid

7 If there is no continuity, check the wiring between the switch and solenoid. (Fig 1)

Fig 1

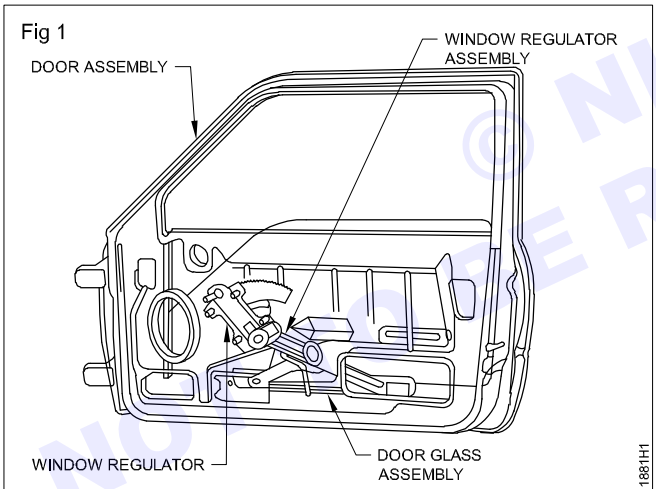

STARTING MOTOR SWITCHED OFF ARMATURE STATIONARY

8 Check the lock mechanism and the linkage for sticking, misaligned or bent leakage (Fig 2)

9 Check whether solenoid is properly locked

10 Reassemble the solenoid, locks and door panel.

11 Connect the wires with door wire harness connector.

12 Check the door lock operation and ensure the proper performance of the door lock and window glass operating .

Fig 2

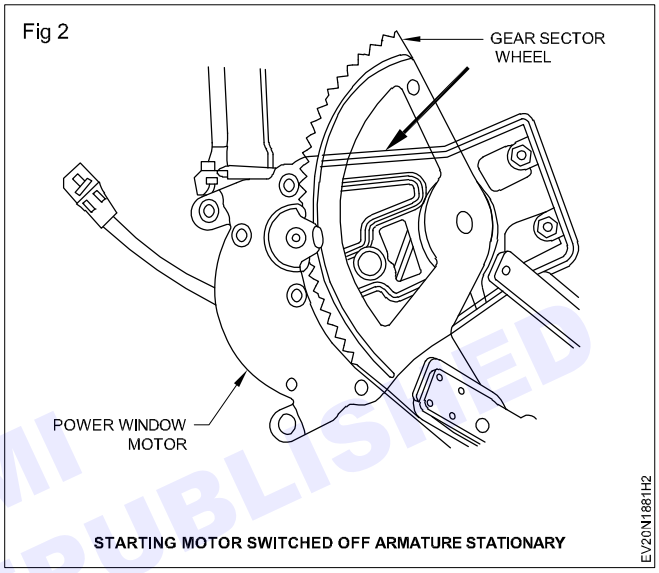

STARTING MOTOR SWITCHED OFF ARMATURE STATIONARY

Fig 3

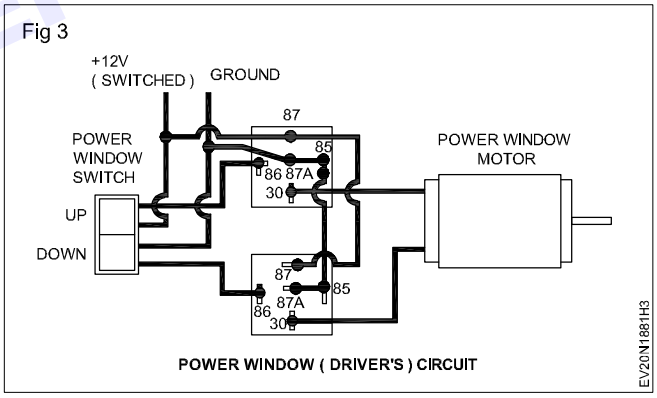

POWER WINDOW (DRIVER'S) CIRCUIT

Fig 4

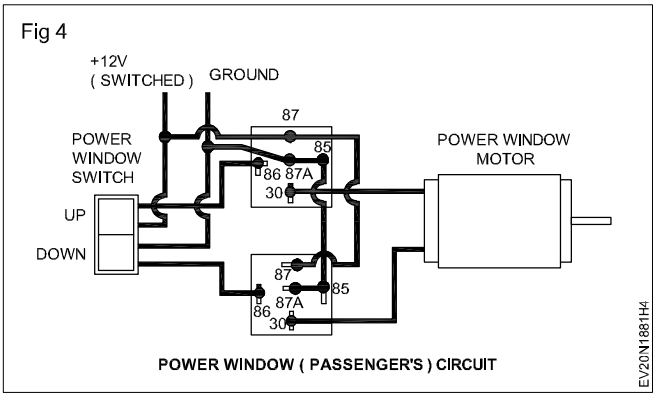

POWER WINDOW (PASSENGER'S) CIRCUIT

— — — — — —

© NIMI NOT TO BE REPUBLISHED

Practice on use personal and shop safety procedures

Objectives: At the end of this exercise you shall be able to
- **use Personal Protective Equipments (PPE)**
- **follow the safety procedures in work place.**

Requirements

Tools / Instruments

- Trainee's tool kit - 1 Set.
- PPE kit - 1 set
- OEM manual - 1 No.

Equipments / Machineries

- Electric vehicle - 1 No.

Materials

- Cotton waste - as reqd.
- Soap oil - as reqd.

PROCEDURE

TASK 1: **Using personal protective equipments in work place**

Note: The instructor has to demonstrate the personal and shop safety procedure and interact with trainees regarding wearing of PPE and its importance.

- Identify the type of work to be carried out on shop floor.
- Select the suitable personal protective equipments to wear before start to work (Eye protection, Hand gloves, Foot protection, Head protection, Body protection etc.)
- Wear the suitable personal protective equipment before starting the work in a electrical vehicle.
- Follow the vehicle manufacturers safety instructions for potential additional requirement on the protection equipment
- Discuss the common work shop safety and protocols for handling tool usage, equipment maintenance, interact about work shop safety regulations before starting work and during work and after finishing the work.
- Use the following safety equipments in electric vehicle maintenance or repair shop.

Fig 1

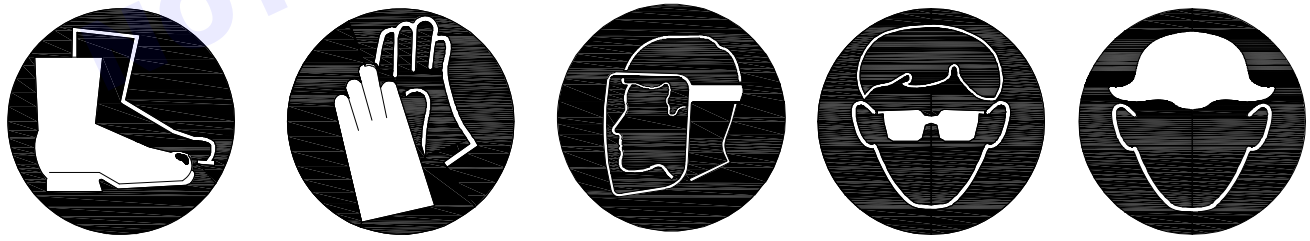

- Self adhesive electrical insulation tape
- High voltage insulation mats
- Safety barriers and chains
- High voltage insulated tools
- High voltage insulated stick
- Insulated high voltage tester
- Voltage absence verifier
- High voltage isolated tooling
- Scissors lift
- High voltage cables
- Service plugs
- Other warning lables on high voltage batteries

© NIMI NOT TO BE REPUBLISHED

High Voltage Caution Labels

Fig 2

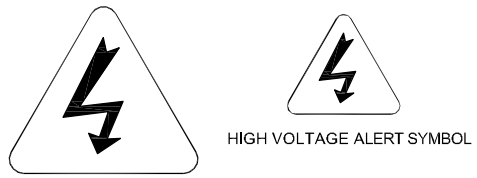

Other Warning Labels that may be on High Voltage Batteries

Fig 3

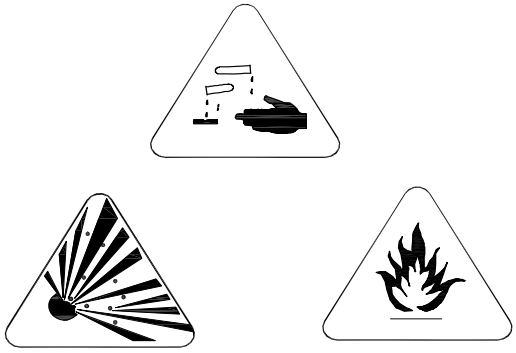

Voltage absence verifier

Fig 4

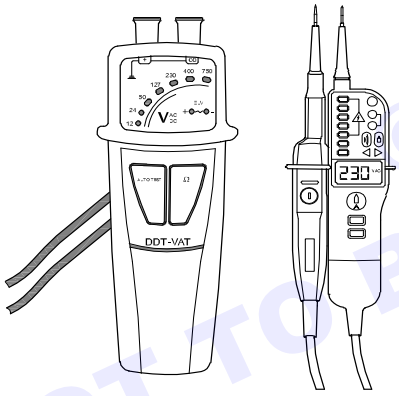

High voltage isolated tooling

Fig 5

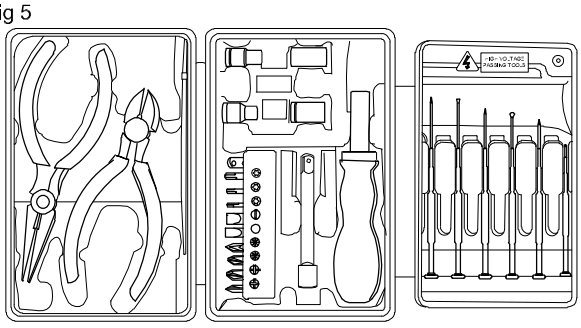

Scissors lift

Fig 6

High Voltage Cables

Orange colored cables that are labeled with the appropriate warning signs to indicate high voltage

From the high voltage battery the high voltage cables are connected to the electric motor.

Service plug or switch

Deactivates and disconnects the high voltage system if fitted.

Fig 7

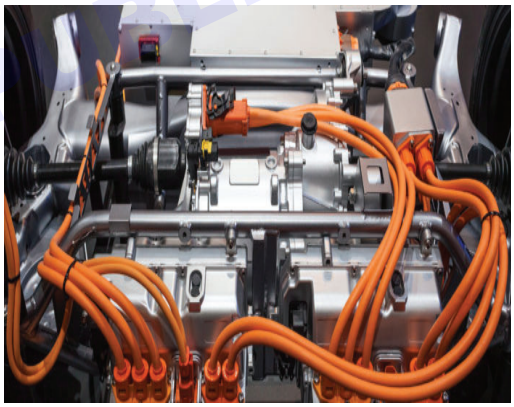

Fig 8

© NIMI NOT TO BE REPUBLISHED

Practice to operate the equipment according to safety protocols

Objectives: At the end of this exercise you shall be able to
- **operate the equipment according to safety protocols**
- **identify the tools and test equipments**
- **servicing of electric vehicle and hybrid Electric test vehicle.**

Requirements

Tools / Instruments

- Trainee's tool kit - 1 Set.
- Vehicle manual - 1 No.

Equipment / Materials

- Electrical vehicle - 1 No.
- Hybrid electric vehicle - 1 No.
- EV teste equipment - 1 Set.

Material

- Cotton waste - as reqd.
- Soap oil - as reqd.
- Battery - as reqd.
- Battery cable - as reqd.

PROCEDURE

TASK 1: **Operate the equipment according to safety protocols**

- Park the electric vehicle on the shop floor.
- Visually inspect the vehicle to identify the service required.
- Justify the equipments required for servicing the vehicle.
- Select vehicles for using a process of E.V .vehicle repair.
- Study the service equipments manufacturer's instruction manual for knowing the operating techniques and safety operating method (It may change to equipment manufacturer to another manufacturer)
- Use the safety methods to operate the equipment .
- Use the PPE while operate the equipment.

Note: The instructor has to demonstrate the equipment operator the operation method with safety protocols.

- Use the self adhesive electrical insulation tape.
- Use the high voltage rubber insulation mats.
- Use the warning barriers and signs in work place.

© NIMI NOT TO BE REPUBLISHED

— — — — — —

TASK 2: **Identify the electric vehicle repair tools and testing equipments.**

- Identify the high voltage insulated tools and insulated stick .
- Identify the copper insulated tool kit.
- Identify the silver insulated kit.
- Identify the insulated pliers, ratchets, screw drivers, sockets and spanners.
- Identify the insulated torque wrench, saws, hammers and align keys and those tools insulated for protection against electrocution risk.
- Identify the electric service tools available in your trade.

Note : All insulated tools protect you against injury, if you make contact with an energized source of E.V.

- Ensure all insulated tools are marked with an official body rating symbol and the year it was insulated.
- Ensure every insulated tools are bearing the VDE logo.
- Identify the battery test equipment.
- Identify the battery analyzer.
- Identify the battery cycle tester.
- Identify the dynamo meter which is used to measure torque and speed of E.V.motor.
- Identify the thermal test equipment.
- Identify the vibration, noise efficiency tester.
- Identify the inverter tester.

- Identify the E.V charging testing equipment.
- Identify the ground resistance tester.
- Identify the wire insulation tester.
- Identify the battery power quality analyzers.
- Identify the vehicle load tester.

— — — — — —

TASK 3: **Servicing the electric vehicle / HEV**

Note : Always refer the manufacturer's instruction while you are servicing a E.V

- Do not have any metal objects in your possession while you are working on the battery.
- Before removing the battery check fire, smoke, spark, flooded, damage, leakage etc.
- Do not allow open flames near battery.
- Do not keep battery for long period in direct sun light.
- Avoid contact of battery contents with skin and eyes.
- Wear suitable protective clothing, gloves and eye/ face protection.
- Only isolate and dismantle E.V systems in well ventilated areas.
- Always use high voltage rubber insulation mats while work with electric vehicle repair work.
- Avoid release of battery content to the environment.
- Use mechanic assistance during manipulating E.V battery.
- Never connect the battery positive terminal to the negative terminal and never connect the cell casing to an electrical conductor.

Safety Precautions and before you start working on the EV

- Make sure to wear your personal safety equipment and it fits properly, is worn correctly and is not damaged in any way.
- Consult the common and manufacturer specific instructions where available.
- On receiving an E.V first examine the high voltage battery visually for physical, mechanical damage, intrusion and leakage. The inspection of the vehicle should be done by a person with a requisite qualification.
- If the high voltage battery is identified as damaged handle in accordance with manufacturer specific instruction and applicable national legislation and guidelines.
- Before removal of high voltage battery ,ensure the area around the E.V is restricted and marked .
- Place a "High voltage" sign on the vehicle, incl. the name of the person in charge for the treatment of the E.V.
- It is forbidden to carry out operations or electrical checks on electrical network when it is powered up.
- Switch off the ignition and remove the key/ store the key at least 3m away from the vehicle.
- Disconnect the starter battery and any other auxiliary batteries if available .
- Remove the service plug or turning off the isolation switch and secure against reconnection.
- Ensure that the high voltage system is at zero potential by using a voltage absence verifier.

© NIMI NOT TO BE REPUBLISHED

— — — — — —

Practice to identify the components location on the wiring diagram.

Objectives: At the end of this exercise you shall be able to
- **identify the electrical components location on the wiring diagram of E.V.**

Requirements

Tools / Instruments
- Trainee's tool kit - 1 Set.
- Vehicle manual - 1 No.

Equipment / Materials
- Electric vehicle - 1 No.
- Vehicle wiring diagram - 1 No.

Material
- Cotton waste - as reqd.
- Soap oil - as reqd.
- Vehicle wire horn - as reqd.

PROCEDURE

TASK 1: **Identify the electrical components location on the wiring diagram of electric vehicle.**

Note: The instructor has to demonstrate to trace the components location in a wiring diagram.

- Study the vehicle manual for achieving the knowledge of electrical components provide in each type of circuits.
- Place the electrical wiring diagram on the work bench and identify the each components location on the circuit.
- Write down the components name and their location of each electrical circuit of electric vehicle in table - 1

© NIMI NOT TO BE REPUBLISHED

Table - 1

S. No.	Component Name	Location in circuit	Name of circuit	Remarks
1				
2				
3				
4				
5				
6				
7				

— — — — — —

Practice to identify the power source ground connection and controls using in a wiring circuits.

Objectives: At the end of this exercise you shall be able to
- **identify the power source of electrical wiring circuits**
- **identify the ground connections of automobile wiring circuit**
- **identify the controls for protective the wiring circuits.**

Requirements

Tools / Instruments
- Trainee's tool kit - 1 No.
- Test lamp - 1 No.
- Multimeter - 1 No.

Equipment / Machines
- Vehicle - 1 No.

Materials
- Cotton waste - as reqd.
- Circuit wire - as reqd.
- Insulation tape - as reqd.
- Wire clip - as reqd.
- Wire connectors - as reqd.
- Wire couplers - as reqd.
- Soap oil - as reqd.

PROCEDURE

TASK 1: **Identify the power source for electrical wiring circuits**

Note : use any type of electric vehicle wiring diagram for this excercise.

1 Check the battery ground connection whether it is a +ve or -ve ground connection.

2 Take wiring diagram of any one vehicle.

3 Identify each lighting circuit and power source.

4 Identify the horn wiring diagram and relay connections and its power source.

5 Identify the wiper wiring circuit in wiring diagram.

6 Identify the power window circuit in wiring diagram.

7 Identify the wind shield sprayer wiring circuit and its power source.

8 Identify the interior light circuit and its power source.

9 Identify the audio or video circuit and its power source.

10 Identify the car A/c circuit and its power source.

11 Identify the starter motor wiring and its power source.

12 Identify the charging circuit and power source.

13 identify the traction motor wire connections and its power source

14 identify the controller inverter,converter and its power sources

15 identify the auxiliary battery and its power source

— — — — — —

TASK 2: **Identify the ground connections of each wiring circuit**

1 Use the work shop manual for support to identify the wiring circuit and wire color code.

2 Check the all lighting circuits ground connections with your vehicle wiring diagram.

3 Mark the ground connection points of each circuits and note down the given table - 1 and check it with your instructor.

Table - 1

S. No.	Circuit Name	Wiring Ground connection marking number	Remarks
1	Head light circuit		
2	Brake light circuit		
3	Side indicator circuit		
4	Wiper circuit		
5	Horn circuit		

© NIMI NOT TO BE REPUBLISHED

6	Traction motor	
7	Battery charging circuit	
8	AC Circuit	
9	Audio & Video circuit	
10	Power window circuit	
11	Immobilizer circuit	
12	Dash board lighting circuit	
13	Power controller circuit	

— — — — — —

TASK 3: **Identify the controls for protective the wiring circuits**

1 Identify the fuse location of each wiring circuit.

2 Identify the power of each fuse in the circuit.

3 Identify the circuit breakers.

4 Identify the fusible link location of each circuit and mark on the given wiring diagram.

5 Write the fuse value of each circuit in Table - 2 and verify it with your instructor.

Table 2

S. No.	Name of the circuit	Fuse value
1		
2		
3		
4		
5		
6		
7		
8		
9		
10		
11		
12		
13		
14		
15		
16		
17		
18		
19		
20		

© NIMI NOT TO BE REPUBLISHED

— — — — — —

Practice to disconnect and connect the interlock loops of E.V

Objectives: At the end of this exercise you shall be able to
- **follow the safety system of electric vehicle**
- **follow the safety system of electric power disconnect and connect the inter lock loop system**

Requirements

Tools / Instruments

- Trainee's tool kit - 1 Set.
- Vehicle manual - 1 No.

Equipment / Materials

- Electric vehicle - 1 No.

Material

- Cotton waste - as reqd.
- Soap oil - as reqd.
- Wire - as reqd.
- Insulation tape - as reqd.

PROCEDURE

TASK 1: **Following safety of Electric Vehicle Power systems**

- Identify the adaptive cruise control system, which maintains the distance between their own vehicle and the front going vehicle
- Identify the blind spot warning system
- Identify the forward collision warning system/ Auto braking system
- Identify the road lane assist system (Steering controls)
- Identify the road bottom line control system
- Identify and trace the following vehicle safety system
- Trace the regenerative braking system
- Trace the battery management system
- Trace the ABS braking system
- Trace the blind spot monitoring system
- Trace the rear view camera and side mirror function
- Trace the air bag safety system
- Trace the vehicle body structural safety system
- Trace the fire safe materials coating and battery temperature regulate system
- Trace the emergency shut off switch which isolate the battery in the event of fire.
- Trace the cyber security system of electrical vehicle
- Trace the functional safety of connected electrical and electronic components in a vehicle functional systems
- Trace the passive safety system including the seat belts, air bags etc.
- Trace the active safety system included antilock brakes, traction control and electronic stability sensors and their function
- Trace the different network connectivity of electric vehicle
- Follow the following safety measure while you are disconnect or connect the electric vehicle battery
- Use the high voltage rubber insulation mats
- Use the high voltage insulated tools
- Use personal protective equipments
- Use the safety barriers in work place
- Use the voltage insulated stick
- Never touch, cut or open any high voltage power cable without PPE before disconnecting the high voltage cable terminals, make sure the voltage between the terminals is '0'volt
- Always refer to additional instructions given by the vehicle manufacturer
- Never connect the battery terminal or electrical components with positive view terminal to negative wire terminal
- Check the vehicle manufacturer specification manual to disconnect and removal of the high voltage battery and interlock cable connection.

Note: The instructor has to explain about vehicle safety systems and circuit tracing methods to the trainees.

© NIMI NOT TO BE REPUBLISHED

— — — — — —

Practice to identify the wire thickness, stripping and crimping of wire

Objectives: At the end of this exercise you shall be able to
- **identify the wire thickness by using standard wire gauge**
- **stripping and crimping of wire.**

Requirements

Tools / Instruments

- Trainee's tool kit - 1 Set.
- Wire strip tool - 1 No.
- Pocket wire table book - 1 No.
- Crimping tool - 1 No.

Equipments / Machineries

- Wire cutter - 1 No.

Materials

- Different strand wire - as reqd.
- Cotton waste - as reqd.
- Insulation tape - as reqd.
- Wire connector - as reqd.

PROCEDURE

TASK 1: **Identifying the wire thickness by using standard wire gauge**

Note : The instructor has to provide different types of thickness wire for practice and guide the trainees to handling wire gauge for taking precise measurement

- Clean the wire end of different strand wires by using dry cloth
- Straighten the wire by hand which insulation is to be skinned out
- Pick any wire for skinning the wire ends
- Mark the point 10 mm from which insulation is to be skinned out
- Adjust the jaws of manual stripper to suit the gap equivalent to the size of the conductor core Fig.1 (a) (b) and set the stop position of the screw

Fig 1

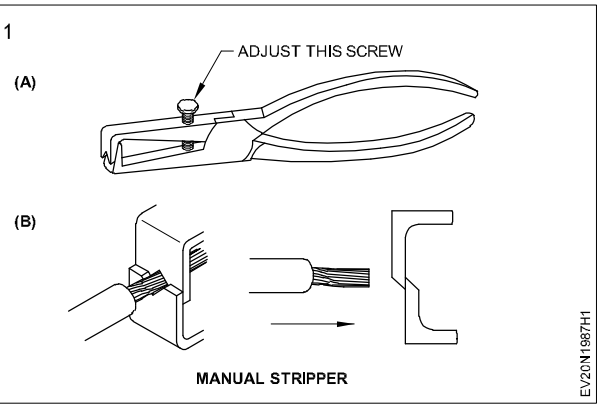

- Hold the cable firmly in one hand and set the jaws at the mark on the wire
- Press the handle of the stripper and make a cut on the insulation
- Pull the stripper to remove the insulation
- By following above steps strip the remaining wire end insulation.

Note: You can also use the knife or wire cutter, or side cutting pliers to remove wire end insulation (Fig.2, 3, & 4)

Fig 2

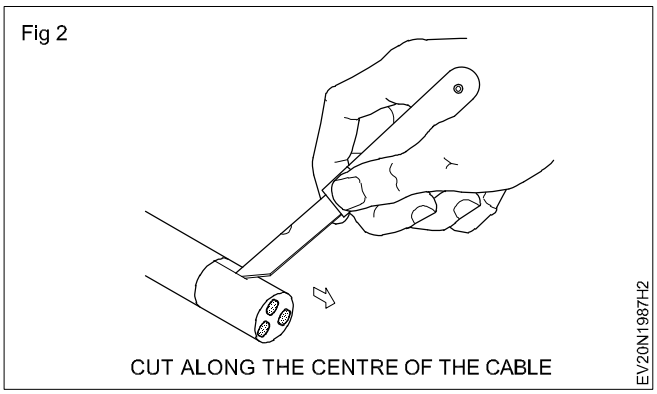

Fig 3

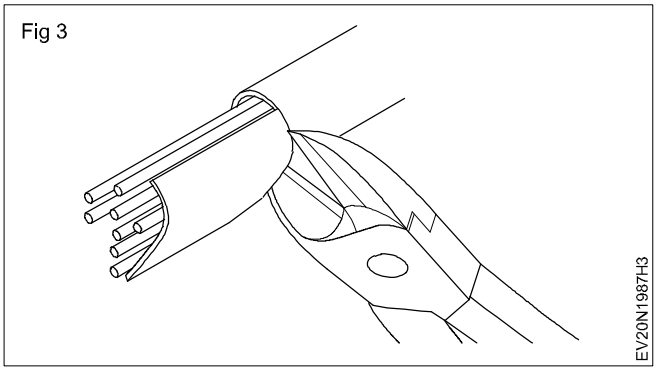

© NIMI NOT TO BE REPUBLISHED

Fig 4

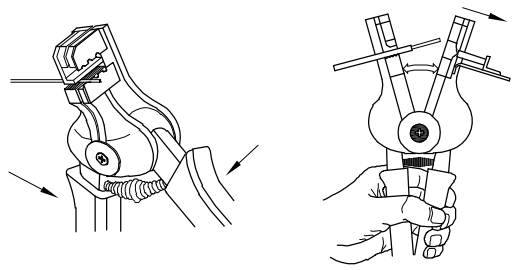

- Pick any one wire to measure the thickness of the wire
- Hold the SWG in one hand and insert the exposed conductor of the wire into one of the large holes of standard wire gauge and take out the wire through the upper slot above that as shown in the Fig. 5
- Repeat the same step until the conductor exactly fit into the wire gauge slot as shown in the Fig.6
- Remove the conductor by pushing it down into the hole and pulling it out
- Note down the number printed /marked at the hole, that is the thickness of the wire
- Get the work checked by your instructor

Fig 5

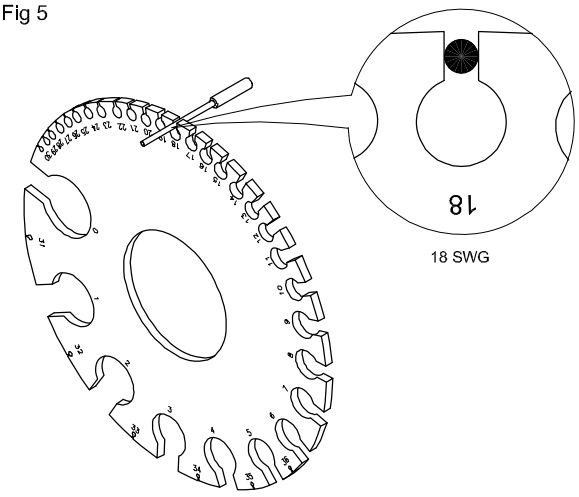

Fig 6

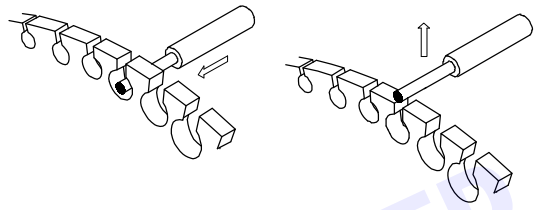

— — — — — —

Task 2 **: Comparing wire ends with spade connectors**

1 Take a red un tinned multi strand wire. Twist the exposed conductors in the existing direction of twist fully by hand or using nose pliers

Straighten the bent/strands if any before twisting. Otherwise your fingers may get hurt while twisting

2 Insert the twisted conductor of the wire into hole of the spade connector giving gap of 1mm as shown in the Fig 1a.

3 Place the assembly in the jaws of the crimping tool as shown in Fig 1b. Readjust the wire and the gap if necessary.

Fig 1

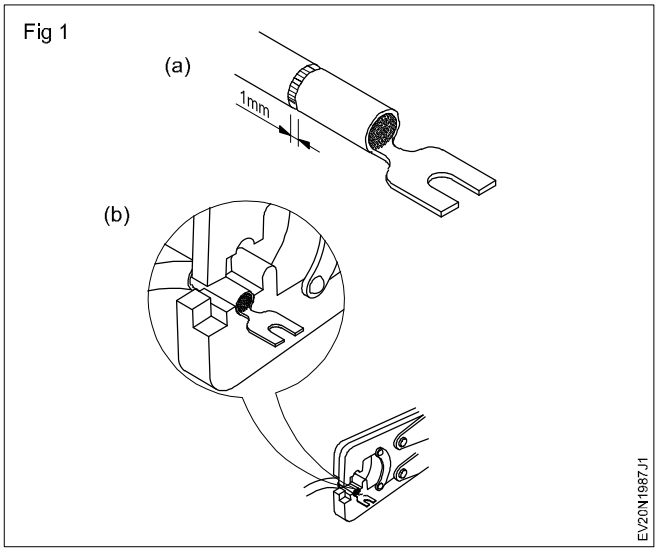

4 Squeeze the handle of the pliers lightly. Release the handle and check if a light impression is made on the stem of the conductor. If not, adjust the position of the connector in the laws

5 Holding the wire in one hand such that the spade connector and the inserted wire are not displaced from its set position, Squeeze the handle of the pliers as shown in the Fig 2 applying full force

Fig 2

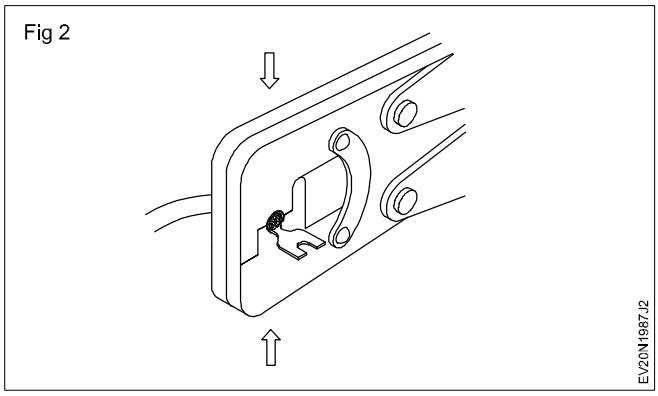

6 Release the force and remove the crimped termination from the tool. Check the strength of the crimped wire termination by pulling the wire and spade connector gently as shown in the Fig.3

7 Get your work checked by your instructor

8 Repeat steps 1 to 6 and crimp a spade connector at the other end of the same wire

© NIMI NOT TO BE REPUBLISHED

Fig 3

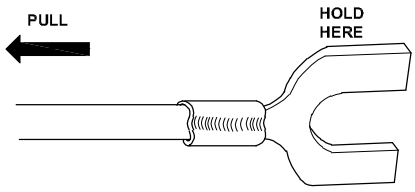

9 Repeat suitably steps 1 to 6 to make crimped wire terminations as shown in the Fig.4with different types of spade connectors

Fig 4 shows some sample types, if other types of connectors are available, they may be used.

- Get your work checked by your instructor

Fig 4

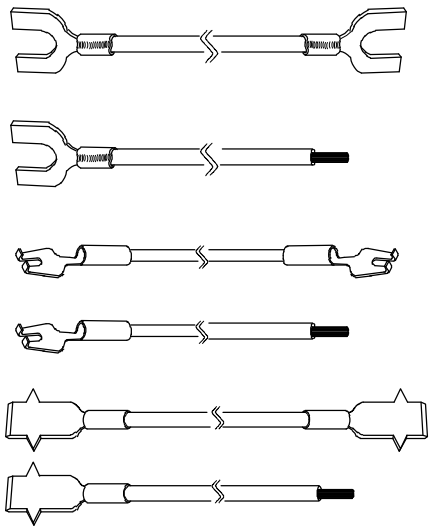

— — — — — —

© NIMI
NOT TO BE REPUBLISHED

Practice on diagnose, repair and test the converter of electric vehicle

Objectives: At the end of this exercise you shall be able to
- **diagnose and repair the DC/DC converter**
- **test the DC/DC converter**

Requirements

Tools / Instruments

- Trainee's tool kit - 1 Set.
- Multi meter - 1 No.
- Oscilloscope - 1 No.

Equipments / Machineries

- Electric vehicle - 1 No.
- Converter - as reqd.

Materials

- Cotton waste - as reqd.
- Soap oil - as reqd.
- Wire - as reqd.
- Wire connector - as reqd.
- Converter - as reqd.

PROCEDURE

TASK 1: **Diagnose and repair and test a convertor**

Note: The instructor has to demonstrate on fault diagnose and repair procedures of E.Vs converter- Provide DC/DC converter with demo circuit to diagnose fault and repair it Explain about oscilloscope setting for various test of converter

- Park the Electric vehicle on the surface place
- Apply parking brake for vehicle safety
- Trace the converter's power circuit input and output.(Fig 1)
- Check the converter's DC voltage input from the battery pack.(Fig 1)
- Check the converter's DC output voltage and current to the auxitiary battey.
- To test the minimum input voltage turn on level the Dc/Dc converter is turned on using the normal input voltage and applying the maximum rated output current by using the electronic load.
- Ensure the input voltage is decreased until the units output begins to drop or the minimum input voltage setting has any effect on the converter's output stability
- Use the oscilloscope for the ripple and prad measurement, it can display and measure wave forms for the applied voltage and current in sample rate using the digitizing measurement
- Check the converter's turn on time it indicates the timing from the point of minimum input voltage drops below the specified minimum and output turns off or drops to zero volts it means ok
- Measure the output line regulation , if the measurement accuracy of the output load and input DC source are adequate than no external measurement device is needed
- To ensure the DC/DC converter output voltage stays within specified regulation tolerance, the load is varied from minimum to maximum current per specification and the absolute delta voltage is calculated
- By using delta voltage the percentage of deviation is calculated and compared to the specified load regulation limits given by the vehicle manufacturer
- Check the maximum output voltage deviation and time it takes for the voltage to recover to its regulated output normal voltage tolerance
- Check the output over ripple and noise voltage by using an oscilloscope ,it is a digitizing measurement function
- Check output over current protection by your instructor guide line
- Check the out over voltage protection , this type of test is used to protect the DC/DC Converter from the external excessive voltage applied to its output if any problem in this circuit rectify the fault.
- Check the converter efficiency test. This test is usually conducted at the normal input voltage and with the output load set to normal or maximum specified ratings.(Fig 2)
- Note down the converter 's input voltage, output voltage ,current flow rate output with load and without electronic load in table 01

© NIMI NOT TO BE REPUBLISHED

Fig 1

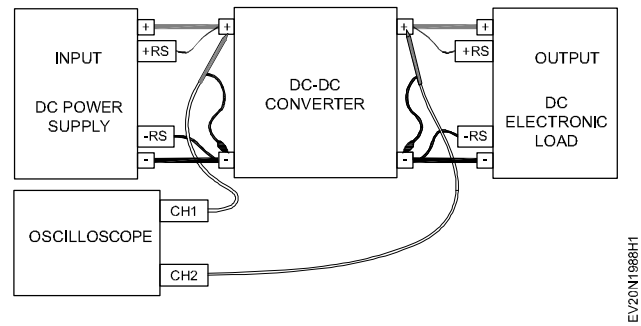

Fig 2

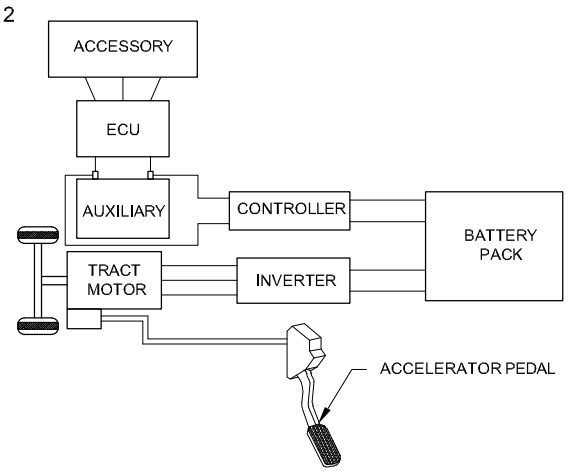

ELECTRIC VEHICLE POWERTRAIN SYSTEM

Table - 1

S. No.	Test type	Input voltage	Output voltage	Current flow rate
1	Timing test			
2	Output line regulation			
3	Output load regulation			
4	Output rippled noise voltage			
5	Output over current protection			
6	Output over voltage protection			
7	Real load wave form			
8	Efficiency test			

© NIMI NOT TO BE REPUBLISHED

— — — — — — — —

Practice on check the inverter assembly of electric vehicle

Objectives: At the end of this exercise you shall be able to
- **check the inverter assembly of electric vehicle.**

Requirements

Tools / Instruments

- Trainee's tool kit - 1 Set.
- Power factor meter - 1 No.
- Vehicle manual - 1 No.
- Multi meter - 1 No.

Equipments / Machineries

- Work bench - 1 No.

Materials

- Cotton waste - as reqd.
- Soap oil - as reqd.

PROCEDURE

TASK 1: **Check the inverter assembly of Electric Vehicle**

- Select the electric vehicle for check inverter assembly
- Park the vehicle on the shop floor and apply parking brake
- Study the vehicle manual to achieve the technical data of an inverter
- Trace the inverter's location in an electric vehicle
- Use the multi meter, thermometer, power factor meter to check the inverter
- Use the insulated tools to check the inverter
- Use safety precautions to ensure optimal functionality and prevent the damage or injury
- Check inverter's mounting and wire connections
- Check the inverter's malfunctions or fail
- Check the faulty components in correct wiring, environmental factors or improper operation of the inverter
- Check the input and output voltage by using multi meter the input voltage should match the rated of your inverter
- Check the output voltage, it should match the normal voltage of inverter's AC load (110 v or 220 v) for single phase output 208 v or 489 v for three phase output
- If the input or output voltage is too low or too high it indicates the problem with the inverter or battery or wiring or motor load
- Find the particular problem and rectify it before going to the next step
- Check the wave frequency, The frequency should be 50 HZ or 60 HZ depending on the standard of AC load if found any problem check the filter, modulation or the load
- If frequency is unstable ,fluctuating it means problem with the inverter or , the oscillator the feedback or the motor load
- Check the temperature and ventilation by using a thermometer and visual inspection usually between 0 degree to 40 degree C for normal operation
- If the temperature is too high or too low, it indicates a problem in inverter's cooling system or ambient condition or the heavy load or poor ventilation or blocked
- Check the protection and safety features by using a test load and fault simulator, this check include over voltage, under voltage, over current, over load, short circuit, over temperature and ground fault protection
- If found any above mentioned problems with inverter, inverter automatically shut down or give alarm to warn
- Check the inverter, fuses, relay, sensors or circuit brakers used in inverter's circuit
- Check the inverter's efficiency and power factor by using power factor meter, if the efficiency or power factor is too low, it indicates a problem with the inverter's load (Fig -1)
- Check the trouble shooting guide and manual provided by the manufacturer

© NIMI NOT TO BE REPUBLISHED

Fig 1

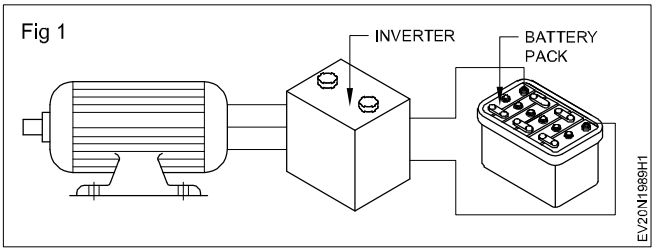

Note: Follow the safety precautions and warnings when handling/operating the inverter to avoid electric shock, fire or injury

— — — — — —

© NIMI
NOT TO BE REPUBLISHED

Practice on use a scan tool for fault finding in electrical vehicle

Objectives: At the end of this exercise you shall be able to
- **identify fault by using scan tool**
- **rectify the fault in electrical circuit.**

Requirements

Tools / Instruments

- Trainee's tool kit - 1 Set.
- OBD scan tool - 1 No.
- Scan tool fault code manual book - 1 No.

Equipments / Machineries

- Electric vehicle with ECU - 1 No.

Materials

- Wire - as reqd.
- Insulation tape - as reqd.
- Cotton waste - as reqd.
- Soap oil - as reqd.

PROCEDURE

TASK 1: **Identify the fault by using scan tool in Electronic circuit (Fig 1 & 2)**

1 Park the vehicle on the plain ground

2 Ensure the vehicle safety precautions

3 Identify the ECU location of the vehicle

4 Find the data link connector (DLC) female connector

5 Select OBD- II scan tool

6 Connect the scan tool's DLC male connector with dash board female DLC connecter

7 Switch on the scan tool

Fig 1

8 Select the vehicle and country

9 Ensure scan tool connecter is properly connected with panel board DLC female connecter

10 Start the engine and select the pin or trouble code of engine management system

11 Systematically check all the systems of electrical and electronic of a vehicle like battery, control unit, ABS, brake system, converter function, inverter function, auxiliary battery and accessories circuit transaction motor function,transmission speed actuators, delivered value of generators and sensors

12 Find the trouble through scan tool trouble code and reset the fault to rectify it, if it is not corrected do repair manually

13 Before using the scan tool study which type of trouble code, what type of trouble and how to rectify it

Note : Consult your instructor to connect and disconnect the scan tool with DTC connecter, trouble code and rectification methods of your vehicle

© NIMI NOT TO BE REPUBLISHED

TASK 2: **Diagnosis process**

Sensor→ CAN network → ECU→ DLC Female connector → DLC Male connector →Interface → Python

Fig 2

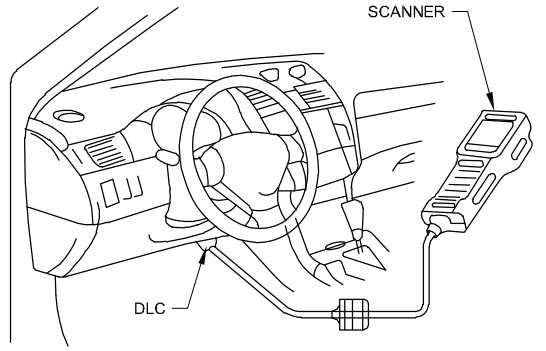

CHECKING AND REPLACING FUSES

When a MIL indicated on car dashboard then go to diagnosis process. This will help to find the defect and diagnose the fault

1 Check the battery is in good condition or not.

2 Ignition on to prepare a diagnosis scan tools when DLC male connector connected to DLC female connector the entire vehicle information is available in DLC

3 The ECU receives the information from the DLC to check either the sensor is properly working out

4 If any fault occurred in the components the sensors sends the signal to the ECU. It can also send this information to DLC with the help of electronic components. Through the python hardware scan tool can detect the DTC on your PC

5 The DTC will help to better trouble shooting the faults. These diagnostic tests can keep a vehicle in good condition. The diagnosis process requirements are computer, python cables, interface, DLC connectors, ECU, sensors can network and diagnosis can tools

(DLC = Data Link Connector)

(DTC - Diagnostic Trouble Code)

Write the Pin Number Trouble Code rectification method in given Table - 1.

Table 1

Pin No	Trouble Code No.	Diagnosis fault	Rectification method
1			
2			
3			
4			
5			
6			
7			
8			
9			
10			

© NIMI NOT TO BE REPUBLISHED

— — — — — —

Practice on dismantling and assembling of vehicle components

Objectives: At the end of this exercise you shall be able to
- **dismantle and assemble the drum brake**
- **dismantle and assemble the disk brake**
- **dismantle and assemble the steering system.**

Requirements

Tools / Instruments

- Trainee's tool kit - 1 Set.
- Hub spanner - 1 No.
- Bearing puller - 1 No.

Equipments / Machineries

- Electric vehicle - 1 No.
- Air compressor - 1 No.
- Grease gun - 1 No.

Materials

- Hub grease - as reqd.
- Nipple grease - as reqd.
- Hydraulic oil - as reqd.
- Emmery sheet - as reqd.
- Oil fuel - as reqd.

PROCEDURE

TASK 1: **Remove brake shoe assembly and dismantle**

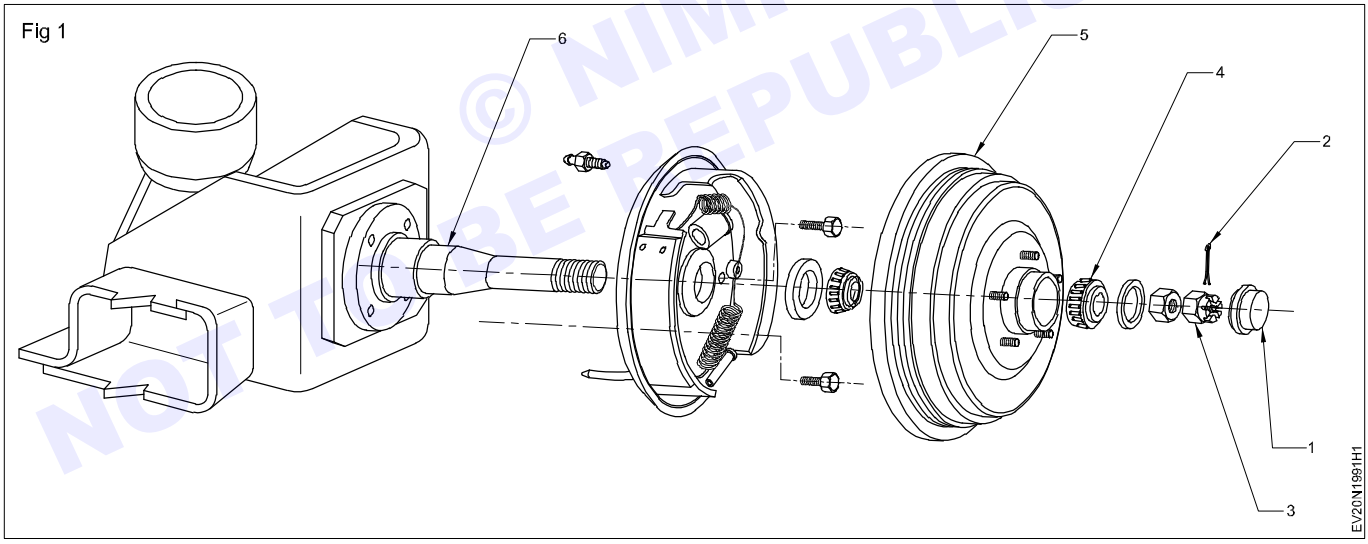

© NIMI NOT TO BE REPUBLISHED

1 Choose the front wheels.

2 Loosen the front wheel nuts.

3 Remove the grease cap (1) (Fig 1)

4 Remove the cotter pin

5 Loosen the axle

6 Jack up the vehicle

7 Fix horsees under the front axle

8 Remove the wheel nuts and wheel

9 Take out the jack

10 Release the brake shoes and make the brake drum free.

11 Remove the axle nut and washer.

12 Remove the outer bearing(4)

13 Remove the huband drum (5) from the spindle or axle (6).

14 Take out the oil seal and inner bearing from the axle.

15 Remove the retracting spring (9) with a special tool (Piler type or other type)(Fig 2)

16 Remove the hold - down spring (12)

17 Remove the brake shoes (8), primary and secondary (forward and reverse shoes).

18 Remove the adjuster

19 Remove the parking brake cable and strut.

Fig 2

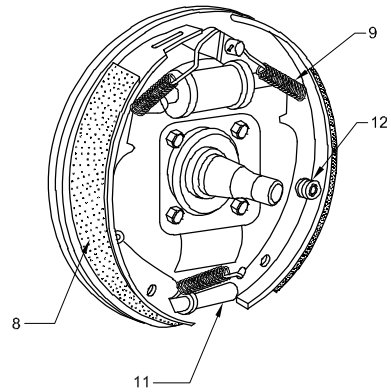

— — — — — —

TASK 2 : **Inspection**

1 Check the lining for wear and crack.

2 Check the brake drum visually for scoring, pitting, crack, etc.

3 Measure the brake drum for taper and ovality, and recommend for turning if the taper and ovality found more than the specific limit.

4 Reline the brake shoe with an oversize lining if the brake drum is recommended for turning.

5 Check the bearings visually for overheating,pitting and damage.Replace if necessary.

6 Check the oil seals

7 Check the retracting spring and replace if necessary

— — — — — —

TASK 3 : **Assembling**

1 Fit the broke adjuster phoe

2 Fit the parking brake strut

3 Keep the primary and secondary shoes on the back plate with the wheel cylinder assembly.

4 Connect the primary and secondary shoes with the retracting spring.

5 Align the holes of the brake shoes with the back plate.

6 Fix the hold - down spring unit

7 Assemble the brake drum and hub assembly

8 New bearing and oil seals are to be inserted on the hub.

9 Inspect the brake shoes operation

10 Adjust the brake shoes in a closer position (For inserting the drum easily)

11 Check the back plate, the shoe's retracting spring, hold down spring unit and parking brake unit and wheel cylinder for correct position.

12 Fix the hub and drum on the spindle axle.

13 Insert the outer bearing play by the dial test indicator

14 Check the bearing play by the dial test indicator

15 If the play is more (excessive) remove the shim or washer.

16 Tighten the hub nut to the specified torque. Check for free rotation of the brake drum and hub.

17 If the play is less on the hub slightly loosen the spindle nut and check it

18 The split pin hole is parallel to the insert and the drum rotates freely

19 Fit the wheel on the drum or hub and tighten the wheel hub

20 Adjsut the brakes

© NIMI NOT TO BE REPUBLISHED

— — — — — —

TASK 4 : **Brake adjusting methods**

- Cam type adjustment
- Notch type adjustment

Cam type adjustment

In the Mahindra jeep this type of adjustment is provided as shown in the figure

1 On the back side of the back plate an eccentric cam's (1) projection rod (2) with a nut is placed.(Fig 1)

2 Loosen both the side nuts.

3 Adjsut the eccentric cam rod lock fully.

4 Slightly loosen both the sides and rotate the wheels for freeness.

Fig 1

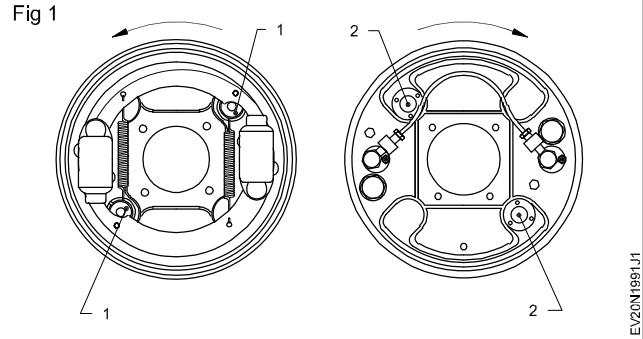

5 For some vehicles it is necessary to check with a feeler gauge between the shoe and drum.

6 Lock the eccentric cam with special spanners.

Screw type adjustment

1 Ambassador cars and some other vehicles are provided with this type.

2 Locate a hole on the drum as shown in the fig.2

3 First fully tighten the screws as shown in the fig.2

Fig 2

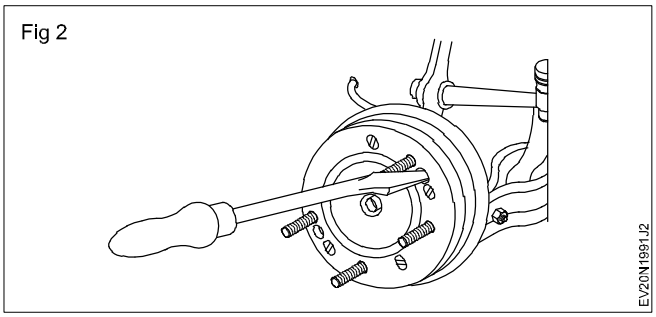

4 Slightly loosen the screws for free rotation.

5 Note the wheel rotates freely and check the efficiency.

6 Jack up the vehicle.

7 Remove the horses.

8 Insert the cotter pin.

9 Tighten the wheel nuts at the specified torque.

10 Remove the chocks from the rear end.

— — — — — —

TASK 5: **Rear wheel brakes**

1 Place choke on the front side.

2 Loosen the wheel nuts.

3 Move the axle pin and loosen the nut.

4 Jack the rear side and place horses properly.

5 Remove the wheels and axles.

6 Loosen the brake unit.

7 Loosen the hub nut and remove the locks.

8 Remove the hub.

9 Remove the outer bearing.

10 Remove the oil seal and inner bearing.

11 Check the bearing sleeve on the hub.

12 If the sleeve is rotating then insert a new sleeve on the hub.

13 Clean the parts.

14 If drum truing is necessary get it done.

15 Remove the retracting spring with the special tools.

16 Remove the hand brake lever.

17 Remove the shoes.

18 If it is necessary to line the shoes, re-line with an oversize lining.

19 Clean all the parts.

20 Refit the shoes, retracting spring, hand brake lever and the hold-down spring.

21 Check the correctness of assembling on the back plate.

22 Assemble the hub with grease and new parts.

23 Insert the hub and tighten the nuts.

24 Check the play and if it is necessary to adjust, do it and lock it.

25 Fix the wheel and tighten the wheel nuts.

26 Insert the axle and tighten the nuts.

27 Jack up the vehicle.

28 Adjust the brakes.

29 Remove the horses and jack.

30 Tighten the hub nuts.

31 Tighten the wheel's nuts to the specific torque.

32 Bleed the brakes.

33 If any adjustment is required

34 do it.

35 Check all the four wheels.

36 Take a road test.

37 If any adjustment is necessary, do it.

— — — — — —

© NIMI NOT TO BE REPUBLISHED

TASK 6: **Overhauling wheel cylinder**

1 Jack up the vehicle and remove the wheel hub and drum.

2 Disconnect the brake pipe line and the fitting on the brake shoes at the toe to fall clear of the brake wheel cylinder.

3 Remove the two screws holding the wheel cylinder to the back plate and remove the wheel cylinder (6). (Fig. 1)

Fig 1

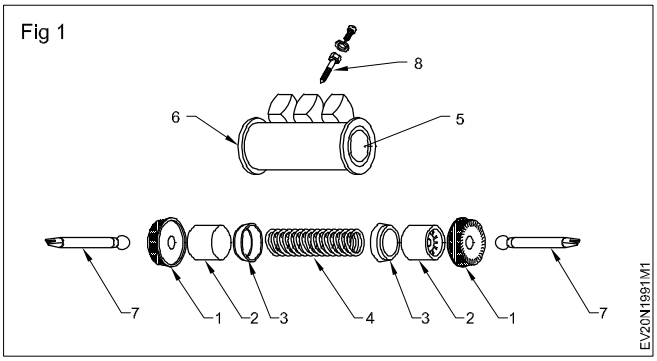

4 Remove the rubber dust covers or boots (1) at the ends of the cylinder and the brake shoe activating pin (7).

5 Remove the pistons (2) and the piston cups (3) and the spring (4).

6 Remove the bleeder valve (8).

7 Wash the parts in alcohol (if alcohol is not available use brake fluid).

8 Check the bleeder valve and clean.

9 Check the cylinder bore (5) for roughness or scoring.

10 Check the clearance between the pistons (2) and the cylinder bore (5) by using a 0.05 mm feeler gauge.

11 Dip the spring (4), pistons (2) and the piston cups (3) in brake fluid, before reassembling.

12 Install the spring (4) in the centre of the wheel cylinder (while replacing spring, piston, cup, use a new kit).

13 Install the piston cups (3) with the cupped surface towards the spring so that the flat surface will be against the pistons (2).

14 Install the piston (2) and dust covers (1) and the bleeder valve.

15 Install the wheel cylinder to the back plate.

16 Fix the brake shoe actuating pin and align with the shoe.

17 Connect the brake line and install the brake shoes and return spring.

18 Refit the wheel, hub and drum.

19 Remove the piston (9) with the piston seal (8).

20 Cleaning and Inspection

21 Clean all the parts except the rubber parts in kerosene.

22 Check the pads and linings, slide bush, piston seal and disc.

Precaution

While reinstalling wash each part cleanly in brake fluid. (Never use any other fluid or thinner)

While fixing the piston and piston seal to the cylinder apply fluid to them.

23 Fix the piston seal (8) and insert the piston (9) in the bore.

24 Fix the circlip (11).

25 Fix the cylinder boot (10).

26 Fix the bleeder screw (6).

27 Fix the bleeder dust cap (5).

28 Insert the brake pads (12).

29 Fix the disc brake caliper (7) on the carrier (15) and align the bush hole and bore.

30 Fix the slide bush (4) in the bore.

31 Fix the dust boots, (3) on both sides of the slide bush (4) with support (2).

32 Fix the caliper pin bolt (1) to the caliper and carrier (15).

33 Fix the carrier with the caliper to the caliper holder (13).

34 Fix and tighten the carrier bolt (14).

35 Connect the brake pipeline.

36 Bleed the system and test it.

— — — — — —

© NIMI NOT TO BE REPUBLISHED

TASK 7: **Dismantle**

1 Chock the wheels.

2 Loosen the wheel nuts - one or two turns.

3 Jack up the wheel.

4 Support with horse.

5 Remove the wheel.

6 Remove the caliper pin bolt (1) from the caliper carrier (15). (Fig.1)

7 Remove the dust boot support (2).

8 Remove the dust boots (3) on both sides of the slide bush (4).

9 Remove the cylinder slide bush (4).

10 Remove the carrier bolt (14) from the caliper holder (13).

11 Remove the disc brake caliper (7) and carrier (15).

12 Remove the disc brake pads (12).

13 Dismantle the brake caliper (7).

14 Remove the bleeder dust cap (5).

15 Remove the bleeder screw (6).

16 Disconnect the brake pipeline.

17 Remove the cylinder boot (10).

18 Remove the circlip (11).

19 Remove the piston (9) with the piston seal (8).

Fig 1

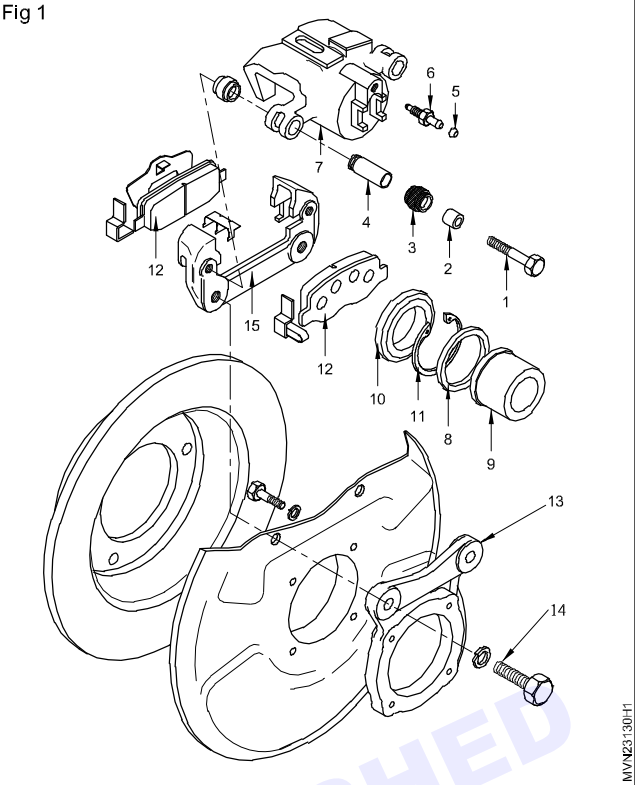

20 Cleaning and Inspection

21 Clean all the parts except the rubber parts in kerosene.

22 Check the pads and linings, slide bush, piston seal and disc. if any damage replace it.

— — — — — —

TASK 8 : **Assembling of disc brake**

1 Fix the piston seal (8) and insert the piston (9) in the bore.

2 Fix the circlip (11).

3 Fix the cylinder boot (10).

4 Fix the bleeder screw (6).

5 Fix the bleeder dust cap (5).

6 Insert the brake pads (12).

7 Fix the disc brake caliper (7) on the carrier (15) and align the bush hole and bore.

8 Fix the slide bush (4) in the bore.

9 Fix the dust boots, (3) on both sides of the slide bush (4) with support (2).

10 Fix the caliper pin bolt (1) to the caliper and carrier (15).

11 Fix the carrier with the caliper to the caliper holder (13).

12 Fix and tighten the carrier bolt (14).

13 Connect the brake pipeline and fill the brake fluid in master cylinder

14 Bleed the brake system

15 Adjust the brake pedal free play and test the brake

Precaution

While reinstalling wash each part cleanly in brake fluid. (Never use any other fluid or thinner)

While fixing the piston and piston seal to the cylinder apply fluid to them.

— — — — — —

© NIMI NOT TO BE REPUBLISHED

TASK 9: **Remove the steering wheel**

1 Disconnect the battery.

2 Chock the wheels.

3 Remove the bottom shield of the steering assembly.

4 Disconnect the horn button and horn wire at the bottom of the steering assembly.

5 Remove the horn button.

6 Release the steering wheel nut lock.

7 Remove the steering nut.

8 Remove the steering wheel by using the steering wheel puller (4). (Fig 1)

Fig 1

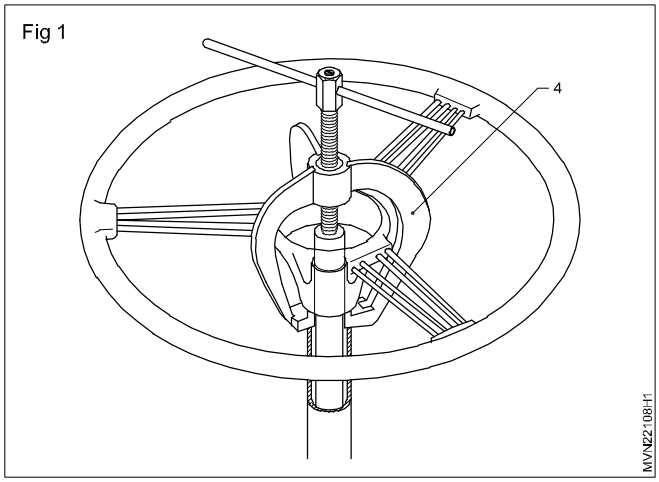

— — — — — —

TASK 10: **Remove the drop arm**

1 Chock the rear wheels.

2 Jack up the vehicle and place horse stand under the front axle.

3 Remove the front wheels.

4 Remove the split pin and loosen the nut of the steering arm (6) at both the ends. (Fig 1)

Fig 1

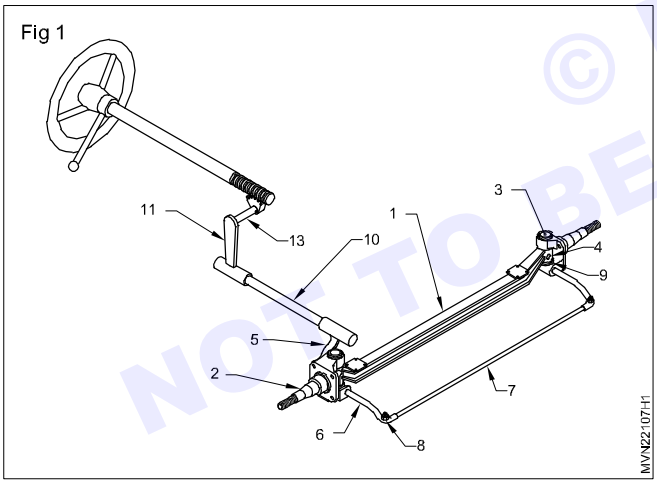

5 Give support underneath the steering arm.

6 By using a special tool or wooden block and hammer, hit the nut (without damaging the threads) and remove the ball joints from the tie rod ends (8) and remove the tie rod (7).

7 Loosen the drag link (10) nut connected to the steering arm (5) and remove the same.

8 Loosen the drag link (10) nut from the 'drop arm' (11) on the lower side and take out the drag link (10).

9 Mark the position of the drop arm (11) with respect to the steering rocker shaft (13). This mark should be aligned while refitting the drop arm (11) on the steering rocker shaft (13).

10 Remove the drop arm's (11) nut on the top. (Fig 2)

11 Pull out the drop arm (11) from the steering rocker shaft (13). Use a special puller (12).

Fig 2

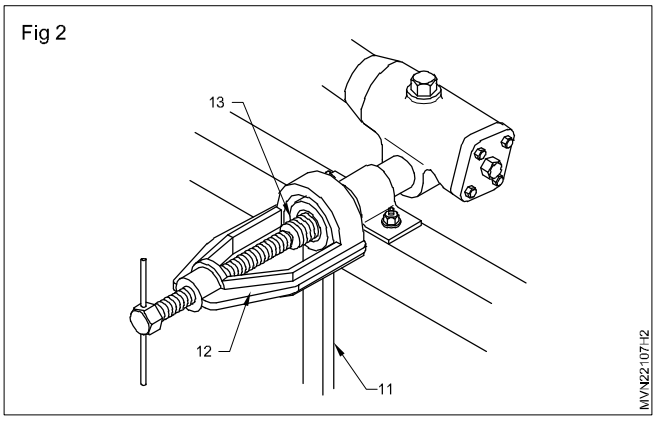

© NIVA NOT TO BE REPUBLISHED

— — — — — —

TASK 11: **Remove the steering gear box**

1 Remove the instrument panel bracket.

2 Remove the exhaust pipe from the manifold.

3 Remove the steering column cover plate on the floor board.

4 Note the position of the steering gearbox and make a mark on the frame and steering gearbox.

5 Remove the steering gearbox mounting bolts and bracket.

6 Remove the steering gearbox and take it out through the bottom side.

7 Place the steering assembly on the workbench.

TASK 12: **Check and adjust the turning angle**

1 Clean all the parts in kerosene.

2 Check visually all the parts for wear. Replace, if found worn out.

— — — — — —

TASK 13 : **Align the drop arm**

1 Bring both the front wheel brake drums in straight ahead and parallel position.

2 Turn the steering wheel on one side lock.

3 Turn the steering wheel to the opposite side lock and count the total number of revolutions.

4 Turn the steering wheel half of that number.

5 Align the mark of the drop arm (11) and rocker shaft of the steering box and fix the drop arm on the rocker shaft.

6 Tighten the drop arm's (11) lock nut.

7 Connect the drop arm (11) and drag link (10). Ensure the steering wheel does not rotate while connecting the drop arm and drag link.

8 Fix the other end of the drag link (10) connected to the steering arm (drive side) (5) and tighten the nut. Ensure that the front wheels and steering wheel do not change their position while connecting the drag link (10) and steering arm (6).

9 Connect tie rod's (7) ends to both the steering arms (6).

10 Lubricate all the parts with the recommended grease and tighten all ball pin nuts at the recommended torque and replace with new split pins.

11 Fix the wheels and tighten the wheel nuts.

12 Check the wheel movement and turning angle by rotating the steering wheel.

13 Jackup the vehicle and the toe - in and toe - out on turn check if necessary adjust it.

14 Release the jack and tighten the wheel nuts.

— — — — — —

© NIMI
NOT TO BE REPUBLISHED

Practice on use a hand and power tools on various nuts ,bolts and screws

Objectives: At the end of this exercise you shall be able to
- **use a hand and power tools to loosen and tighten the various nuts, bolts and screws.**

Requirements

Tools / Instruments

- Trainee's tool kit - 1 Set.
- Impact wrench - 1 No.

Equipments / Machineries

- Electric vehicle - 1 No.

Materials

- Cotton waste - as reqd.
- Soap oil - as reqd.
- Assorted screws - as reqd.
- Assorted nuts, bolts - as reqd.

PROCEDURE

TASK 1:**Use a hand and power tools to loosen and tighten the various screws and nut bolts**

- Select the electric vehicle and park it on surface plane
- Identify various screws and nuts bolts used for fastening parts in an electric vehicle (Fig 1)

Fig 1

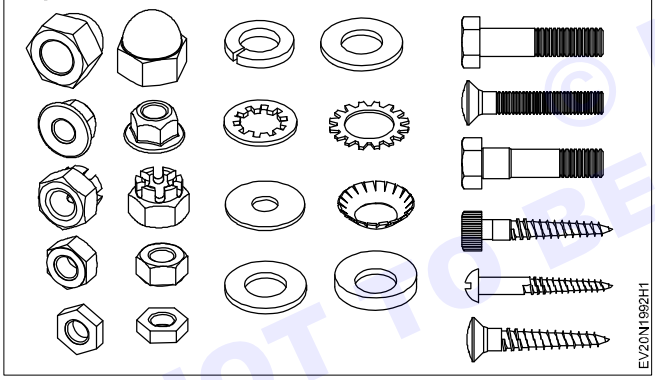

- Visually inspect nuts bolts sizes used in an electric vehicle
- Select the suitable spanner like double end spanner , ring spanner, socket spanner , tubular spanner,, wrench spanner align key etc, manual handling
- Select the power tools like impact wrench to loosen or tighten the nuts and bolts.
- Use proper sockets to avoid damage of the nuts or slipage the nuts edges
- Use the proper size types of screw driver to loosen and tighten the screws (Fig.2, 3)
- Use the adjustable spanner as shown in the Fig.4
- Use the align key as shown in the Fig.5
- Use the swivel sockets as shown in the Fig.6
- Use the double end and Tubler spanners as shown in (Fig.7.8.9.10,11)

Fig 2

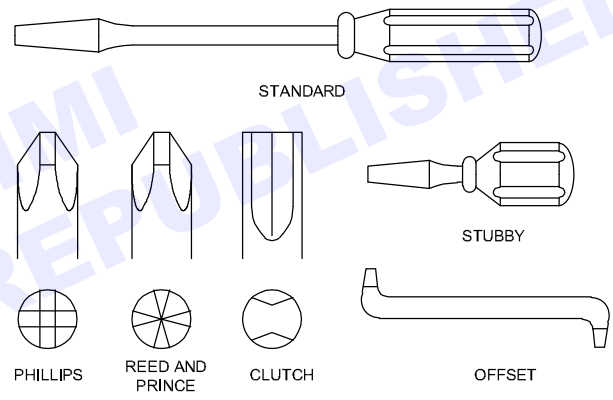

Fig 3

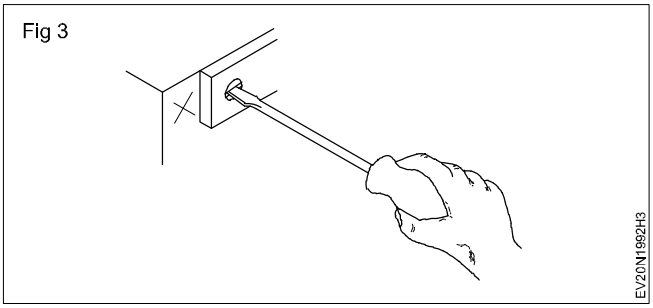

- Use the socket in torque wrench and speed handle to loosen and tighten nuts and bolts (13,14,15)
- Use the combination spanner where ever needed (Fig.12)
- Use the impact wrench for proper tighten torque and speed work (Fig.16)
- Use the air chisel for cutting the bolts and nuts of vehicle body (Fig.17)

© NIMI NOT TO BE REPUBLISHED

Fig 4

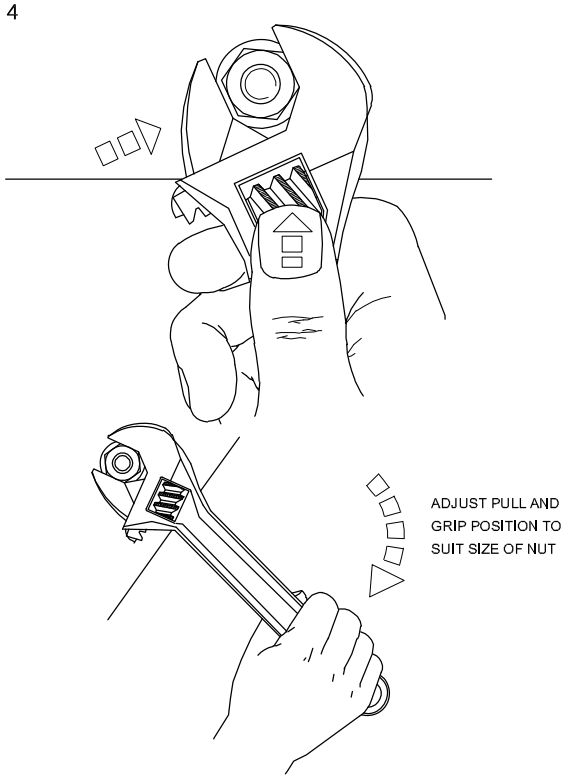

Fig 5

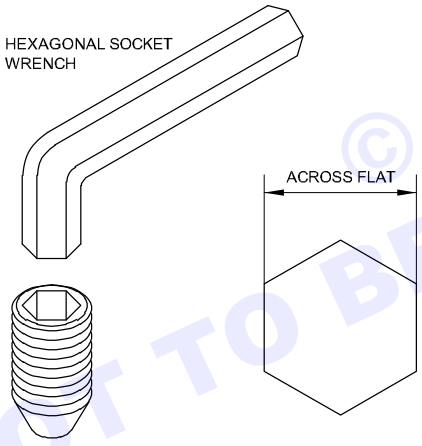

Fig 6

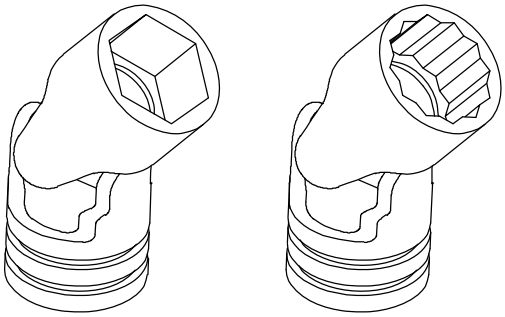

SWIVEL SOCKETS

Fig 7

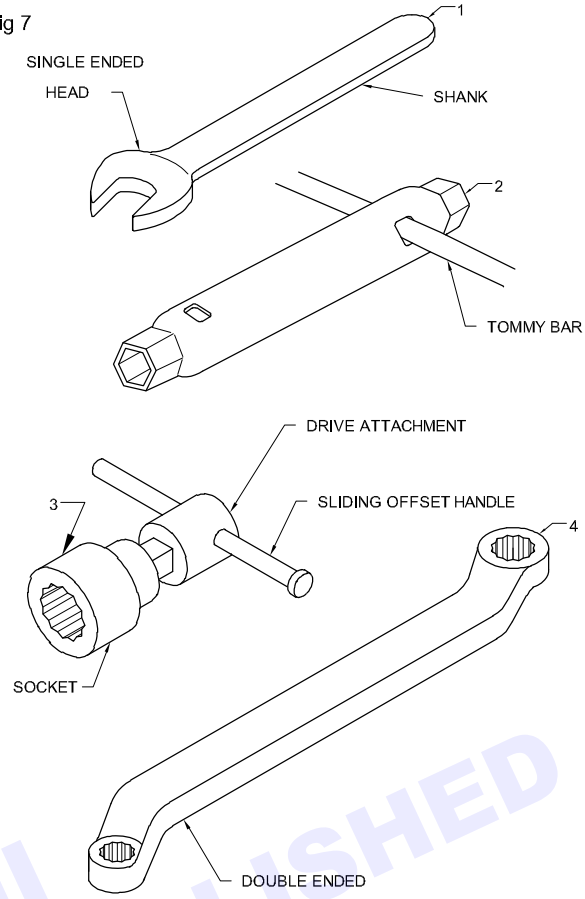

Fig 8

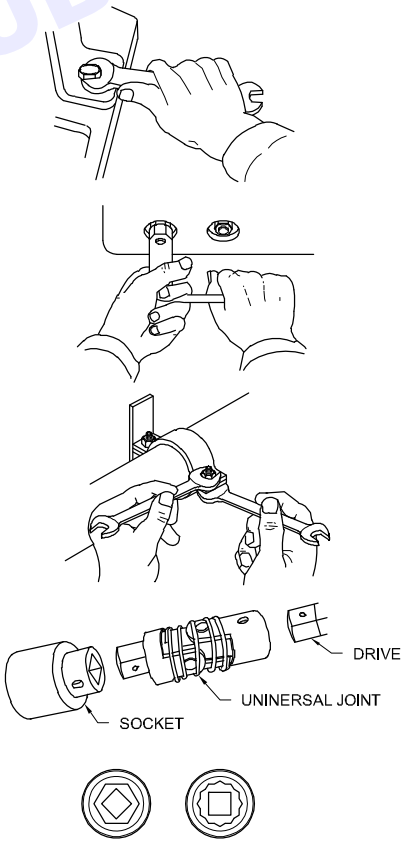

© NIMI
NOT TO BE REPUBLISHED

Fig 9

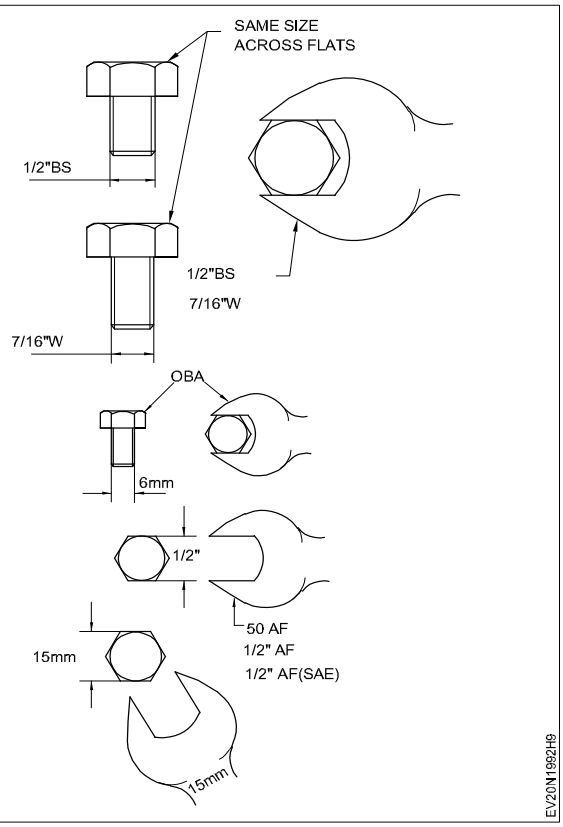

Fig 10

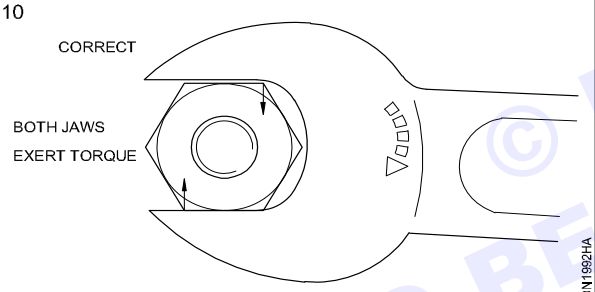

JAWS THRUST FULLY ON TO NUT

Fig 11

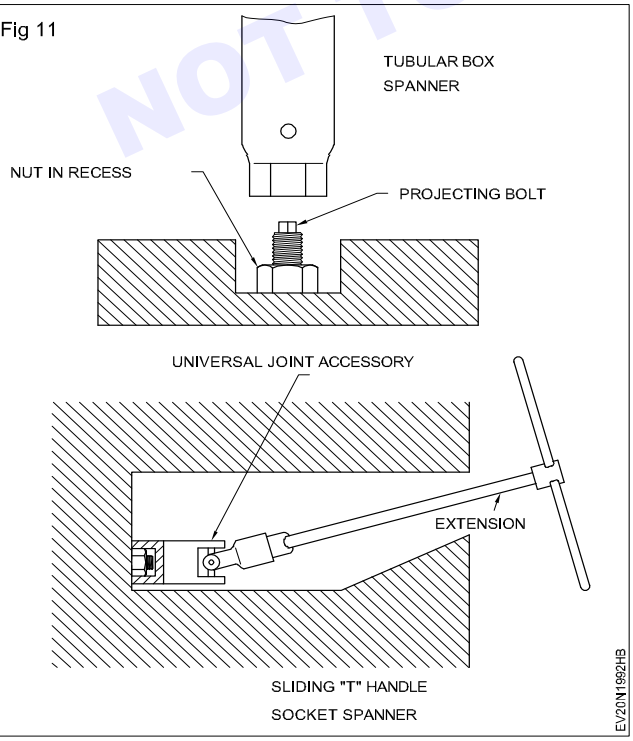

Fig 12

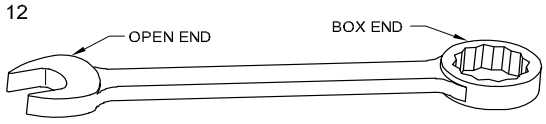

COMBINATION OF RING AND OPEN END SPANNER

Fig 13

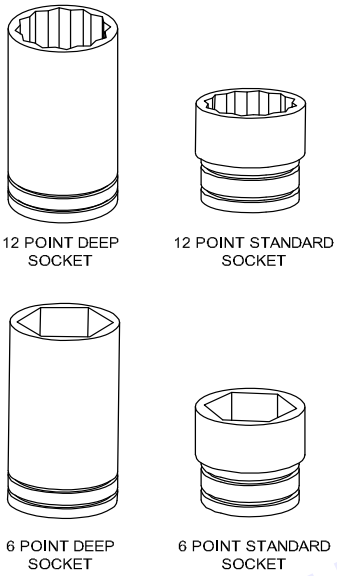

SOCKET SPANNER

Fig 14

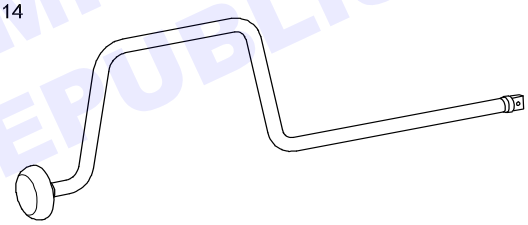

SOCKET SPEED HANDLE

Fig 15

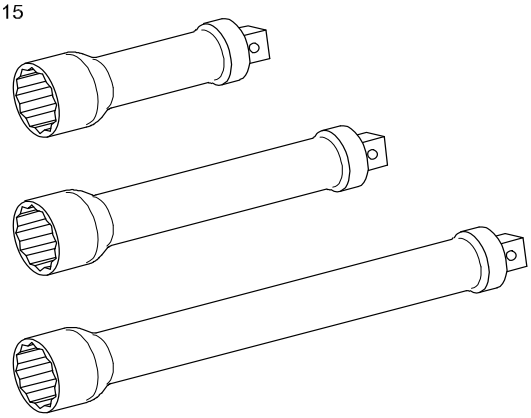

SOCKET EXTENSION BARS

© NIMI
NOT TO BE REPUBLISHED

Fig 16

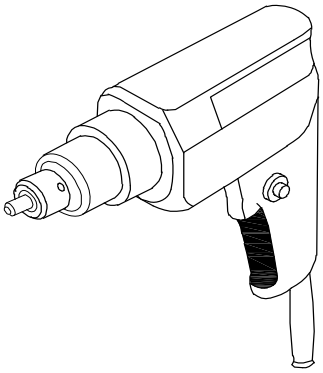

Fig 17

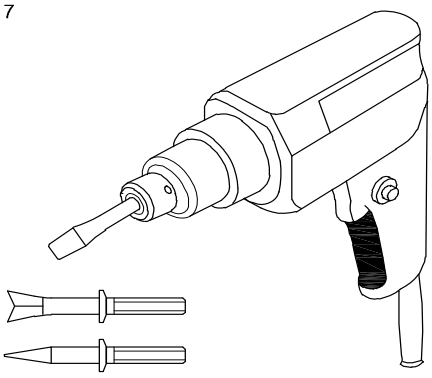

Fig 18

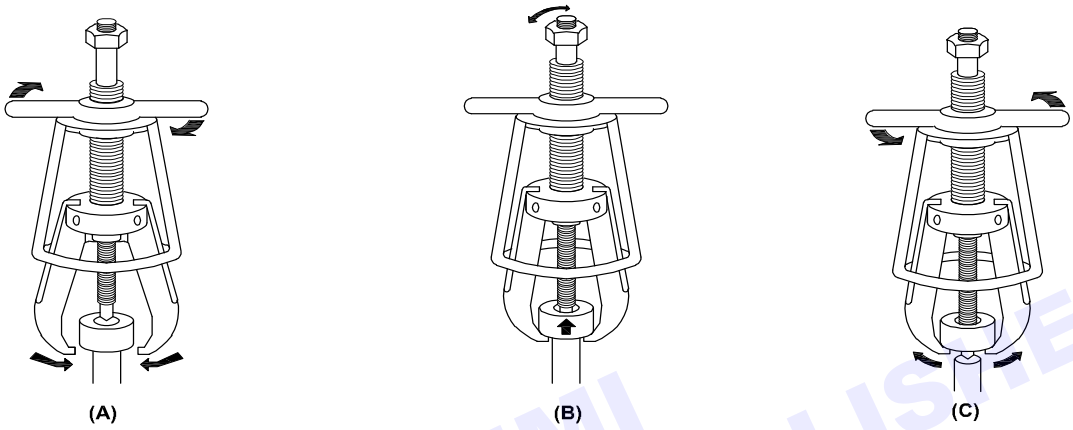

Note : The instructor has to explain the following methods to the trainee's

1 Explain about selection of suitable tools and their using method.

2 Demonstrate the proper use of hand and power tools for loosen and tighten the fasteners.

3 Provide the collection of different screw, nut and bolts for study the head & thread and their material.

4 Use the pullers to pull the bearings and pulleys.

5 Note down the tools used for tighten or loosen the fasteners in Table 1.

© NIMI NOT TO BE REPUBLISHED

Table 1

S.No	Tools Name	Purpose of tools	How to use the tool	Remarks
1	Double end spanner			
2	Ring spanner			
3	Tubler spanner			
4	Adjustable spanner			
5	Screw Driver			
6	Allen Key			

— — — — — — —

Practice on measuring voltage drop in a electrical circuit

Objectives: At the end of this exercise you shall be able to
- **measure voltage drop in a circuit.**

Requirements

Tools/Instruments

- Trainee's tool kit - 1 No.
- Voltmeter MC 0 - 300 V - 1 No.
- Multimeter - 1 No.

Equipments

- Vehicle - 1 No.
- Auto electrical wiring circuit board - 1 No.
- Battery - 1 No.

Materials

- Fuse - as reqd.
- Switch - as reqd.
- Cable/Wire - as reqd.

PROCEDURE

Voltage Drop Test in Head light circuit

1 Clean all the terminals, connectors in the auto electrical wiring circuits

2 Check, whether battery is fully charged condition.

3 Connect the multimeter at shown in Fig 1 in the auto electrical wiring circuit.

4 Connect +ve lead to the input terminal of the motor.

Fig 1

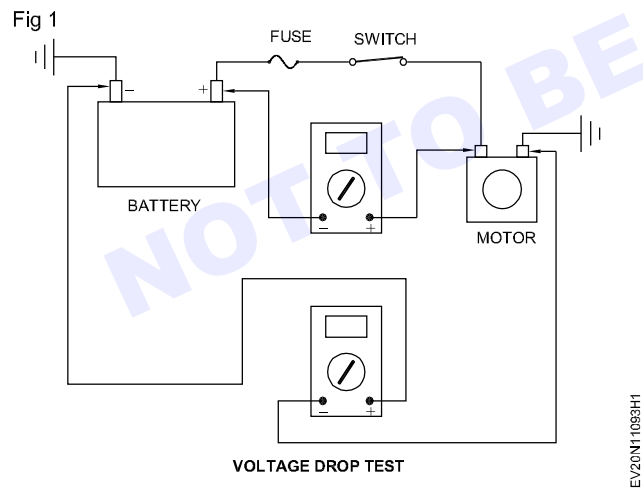

5 Connect -ve lead to the battery

6 Read the voltage shown in the multimeter.

7 Remove, clean and refit (or) Replace the terminal if voltage drop exceed 0.2 V.

Measuring voltage drop in head light circuit

1 Select a low scale voltmeter

2 Connect the voltmeter across the part of the circuit in which high resistance is suspected.

3 Measure the voltage drop across the HL ground.

4 Connect the voltmeter positive lead to the HL ground and Negative lead to the -ve terminal of battery. (Fig 2)

5 Measure the voltage drop shown in meter.

6 Compare the measured value with the rated value.

7 Replace, Clean and reconnect the lead if the voltage drop exceed o.2 Volt.

8 Repeat the same voltage drop test to check the voltage drop in all other Electrical accessories and their electrical circuits.

9 if found voltage in a circuit check and find the fault in a circuits

10 if found any fault in a circuits rectify the fault.

11 Repeat the same steps to recheck voltage drop in a circuits.

12 Ensure voltage drop is as specified by the vehicle manufacturer

© NIMI NOT TO BE REPUBLISHED

Fig 2

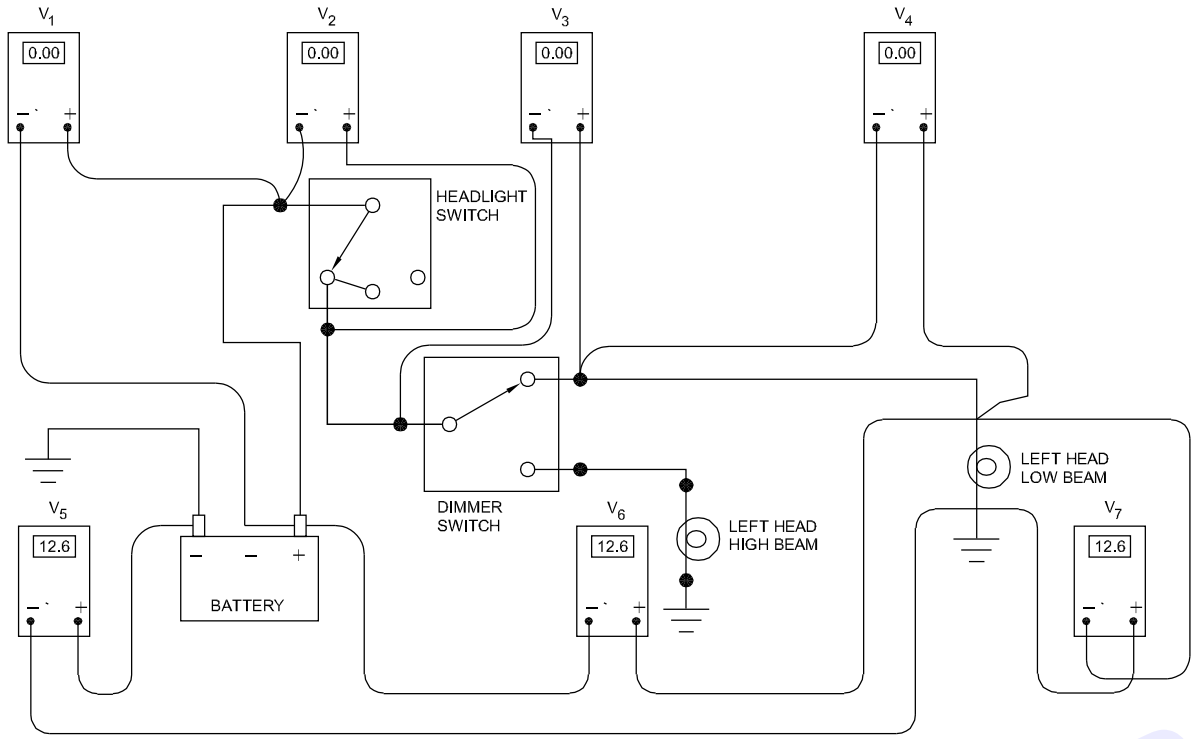

MEASURING VOLTAGE DROP IN A HEADLIGHT CIRCUIT

— — — — — — — — — —

© NIMI
NOT TO BE REPUBLISHED

Practice on identify and interpret electrical system of Electrical Vehicle

Objectives: At the end of this exercise you shall be able to
- **identify the , electrical circuits is a vehicle**
- **interpret on electrical circuit system of electric vehicle.**

Requirements

Tools / Instruments

- Trainee's tool kit - 1 Set.
- Vehicle manual - 1 No.
- Vehicle electrical circuit wall chart - 1 No.

Equipments / Machineries

- Electric vehicle - 1 No.

Materials

- Cotton waste - as reqd.
- Soap oil - as reqd.

PROCEDURE

TASK 1: **Identify the electrical circuits in a electric vehicle**

Note: The instructor has to demonstrate the method of identifying the electrical system with reference of circuit diagram of electric vehicle

- Park the electric vehicle on the shop floor
- Study the electric vehicle's circuit diagram and discuss with your instructor (Fig.1)
- Open the door of the vehicle and identify the various instruments and switches displayed on the panel board and steering
- Compare the systems with circuit diagram
- Ensure your vehicle power system is switched off
- Wear personal protective equipment to avoid electrical accidents/ shocks while you are tracing an electrical circuit
- Identify the traction motor circuit
- Identify the inverter wire connections
- Identify the transmission system
- Identify the cooling system circuit
- Identify the battery charge port circuit
- Identify the controllers wire connectors
- Identify the drive train system
- Identify the battery pack and their wiring circuit
- Identify the electric vehicle auxiliary accessories function and their circuit like a head light, indicator, brake light, hazard light system, wiper, gauges, warning light circuit, OBD system circuit, HVAC circuit power windows, remote lock, Horn circuit audio and video system circuit etc

Note: If found any difficulties to identify the circuit in a vehicle get help from your instructor or you tube video

© NIMI NOT TO BE REPUBLISHED

Fig 1

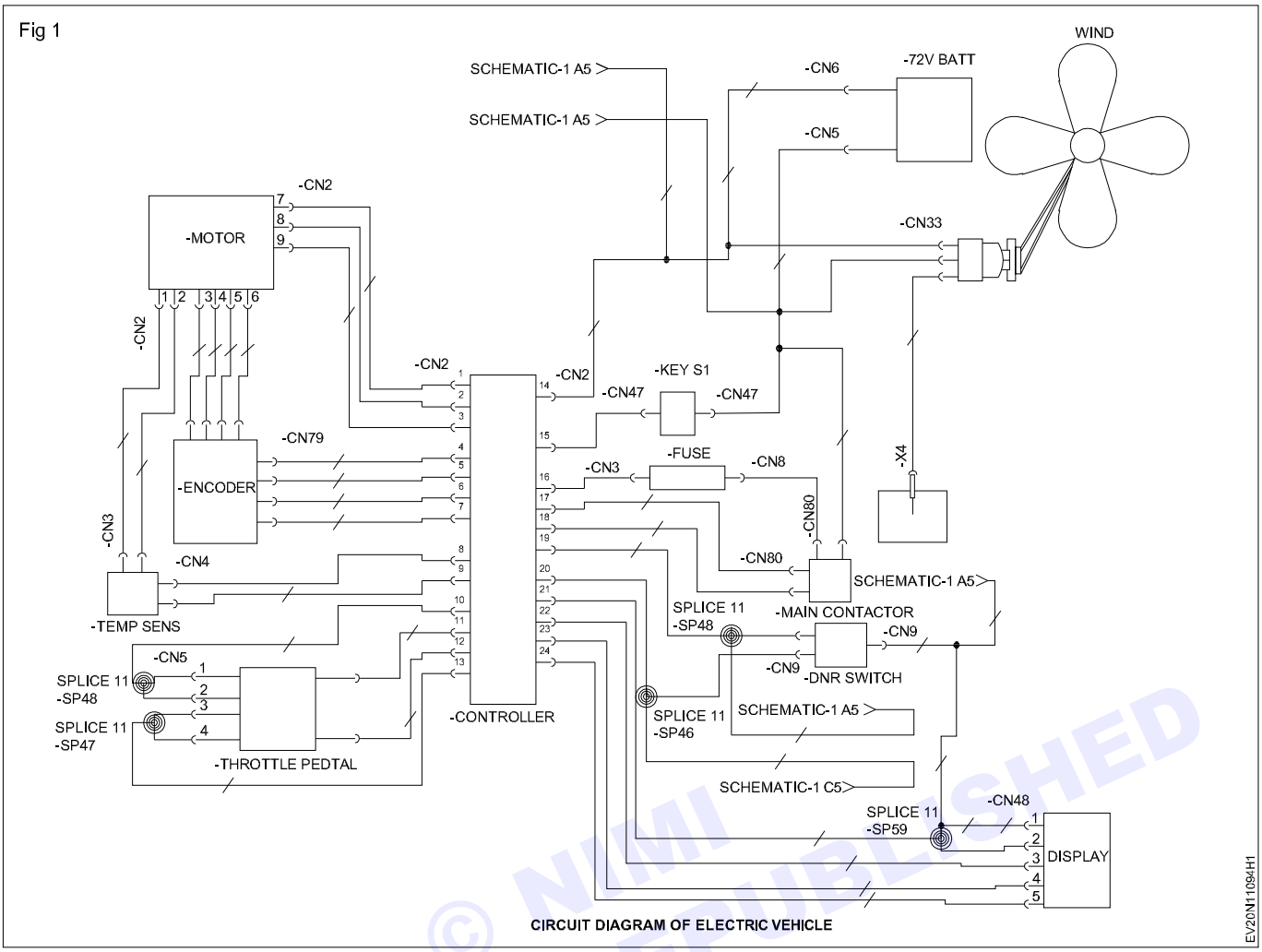

CIRCUIT DIAGRAM OF ELECTRIC VEHICLE

© NIMI NOT TO BE REPUBLISHED

— — — — — —

TASK 2: **Interpret on electrical system of electrical vehicle**

- Visually inspect all types of wiring systems in an electric vehicle
- Check for any signs of damage, loose connections, corrosion or burnt connectors
- Use the fault diagnostic tools like OBD scan tool, multi meter, tester etc
- Analyze the test result and compare them with specification provided by the manufacturer
- Identify the root cause for defects and rectify it
- Interact with co- trainees about various defects diagnosed by you
- After repair retest the electrical system to ensure that system function is as specified limit by the vechice manufacturers.

— — — — — —

Practice on measuring of circuit voltage ampere and resistance

Objectives: At the end of this exercise you shall be able to
- **measure the electrical circuit voltage, ampere and resistance.**

Requirements

Tools / Instruments
- Trainee's tool kit - 1 Set.
- Multi meter - 1 No.
- Vehicle electrical circuit diagram - 1 No.
- Volt meter, Ampere meter - 1 No.

Equipments / Machineries
- Electric vehicle - 1 No.

Materials
- Cotton waste - as reqd.
- Soap oil - as reqd.
- insulation tape - as reqd.
- Wire - as reqd.

PROCEDURE

TASK 1: **Measure the current, voltage and resistance of an electrical circuit**

Note: The instructor has to demonstrate the method of current , voltage and resistance measuring in an electrical circuit

- Park the vehicle on a shop floor.
- Select suitable ampere meter, voltmeter or multi meter to measure the circuit ampere, voltage and resistance.
- Switch of the battery power and select any one of electrical circuit in a vehicle.
- To check the circuit ampere use the ampere meter.
- Disconnect one end of upper motor terminal and connect the ammeter as shown in the Fig 01.
- switch on the battery power.
- Switch on the wiper switch and check the current flow in wiper circuit and note the ampere meter reading.

Fig 1

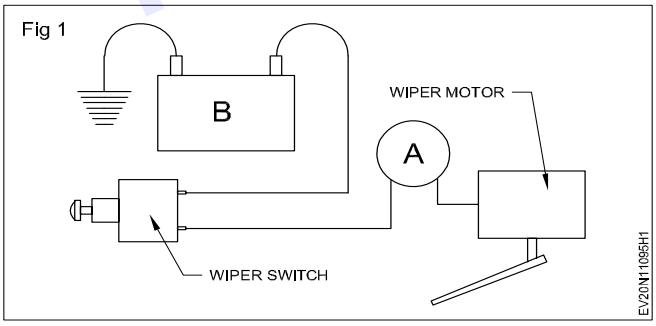

Voltage test

- select the volte meter for measure the circuit voltage.
- Identify any one of electrical circuit to measure voltage.
- Suppose you are selecting a horn circuit you can connect the voltmeter as shown in (Fig 2,3).
- note the voltmeter reading in your note book, as it is you can check in various circuits.

Fig 2

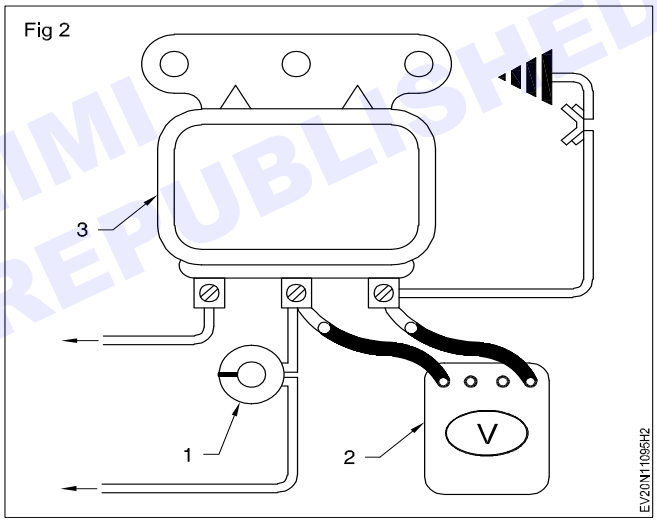

Resistance test

- Select the volt meter or multimeter to check the resistance of the eletrical circuit (Fig 4)
- Connect the volt meter or multimeter as shown in Fig 3 B,s and take voltage reading

Fig 3

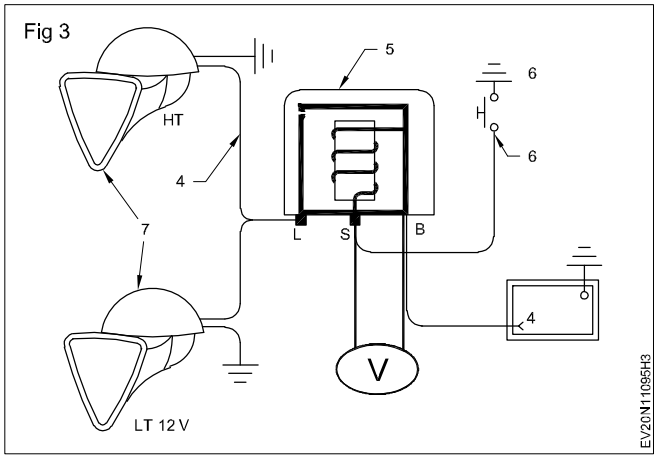

© NIMI NOT TO BE REPUBLISHED

- Connect the volt meter S,L and take voltage reading (Fig 4)
- Compare the voltage reading the reading quantity difference is a resistance of the circuit.

Note :

- **You can select any one eletric circuits and test or measure the ampere, voltage and resistance of a circuits**
- **Further you refer the exercise No. 17 same type of Practice.**

Fig 4

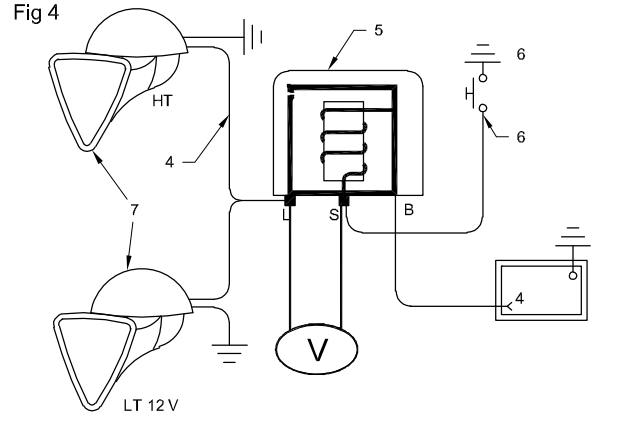

— — — — — — — — —

© NIMI
NOT TO BE REPUBLISHED

Practice on testing fuses and relays in a electrical circuit

Objectives: At the end of this exercise you shall be able to
- **test the fuse in a electrical circuit**
- **task the relays in a electrical circuit.**

Requirements

Tools / Instruments
- Trainee's tool kit - 1 Set.
- Multi meter - 1 No.

Materials
- Cotton waste - as reqd.
- Soap oil - as reqd.

Equipments / Machineries
- Electric vehicle - 1 No.

PROCEDURE

TASK 1: **Test the fuses in a electrical circuit of electrical vehicle**

Note : The instructor has to demonstrate the using method of multimeter and testing procedures of fuse and relays in a electrical circuit.

- Park the vehicle on surface ground
- Locate the fuse box in a electric vehicle
- Trace the each circuits fuse in a junction box
- Select the multimeter for check the fuse
- Turn the meter ON and set it to measure contiunity
- Before test the fuse, put the positive and negative leads together and listen for beep to ensure its working properly.
- If you want to measure the ohms, use the multimeter setting that has the omega symbol (Ω)
- Put off the battery power to the fuse circuit
- Put on multi meter lead on each end of the fuse and look at the display
- If you hear beep sound continuously as you hold the probes against the fuse, it means fuse is absolutely correct
- If you do not hear a beep sound coming from the meter, it means the fuse is blown or damaged and it should be replaced
- Never replace a blown or suspect fuse with one of a higher rating , the rating ensures the current can pass the wiring safely. Always replace the fuse with the same rating as the old one. Never test a fuse on equipment power on in a circuit

© NIMI NOT TO BE REPUBLISHED

— — — — — —

TASK 2:**Test the relay fitted in an electrical circuit**

- Select any one of relay fitted in a electrical circuit
- Relay is electromechanical device so it is getting wear and tear and get damaged or faulty
- Select the multi meter to test the relay
- Disconnect the relay wire connections and mountings of relay
- Take out the relay from the circuit
- Set the multi meter in resistance measurement mode (Ohm meter)
- If you have analog multi meter, put the range of meter in minimum range (200 Ω or similar value)
- Take the loads of the multi meter and connect them across the coil terminals pf the relay the multi meter read between 40Ω to 120Ω
- If the coil is damaged multi meter shows out of range and you have to replace the relay

Note: Further refer exercise No.18

— — — — — —

Practice on brazing wires

Objectives: At the end of this exercise you shall be able to
- **brazing wires.**

Requirements

Tools / Instruments

- Trainee's tool kit - 1 Set.
- Wire cutter - 1 No.
- Knife - 1 No.

Equipments / Machineries

- Gas welding unit - 1 No.
- Nozzle cleaner - 1 No.

Materials

- Cotton waste - as reqd.
- Soap oil - as reqd.
- Flux - as reqd.
- Brazing rod - as reqd.

PROCEDURE

TASK 1: **Brazing wires by using oxy- Acetylene welding**

- Select the set of oxy-acetylene
- Move oxygen and acetylene cylinders with the caps from the store to the gas welding area. An oxygen cylinder is identified by a black color painted on it (Fig.1)

Fig 1

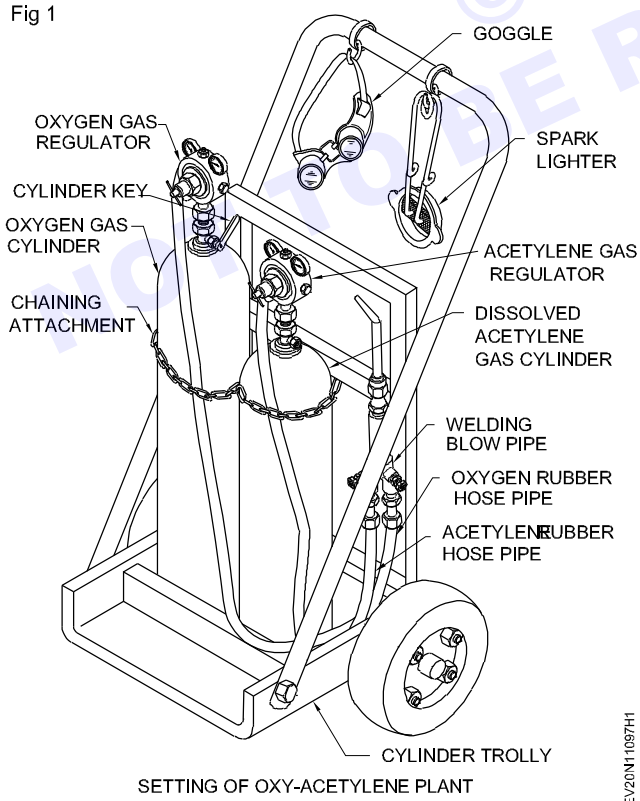

SETTING OF OXY-ACETYLENE PLANT

An acetylene cylinder is identified by the maroon color painted on it . Also the oxygen cylinder will be taller than an acetylene cylinder and the diameter of the oxygen cylinder will be less than the acetylene cylinder

Ensure full cylinders are kept separately from empty cylinders

Position the gas cylinders in a trolley and secure them with a chain. Fig.2

Fig 2

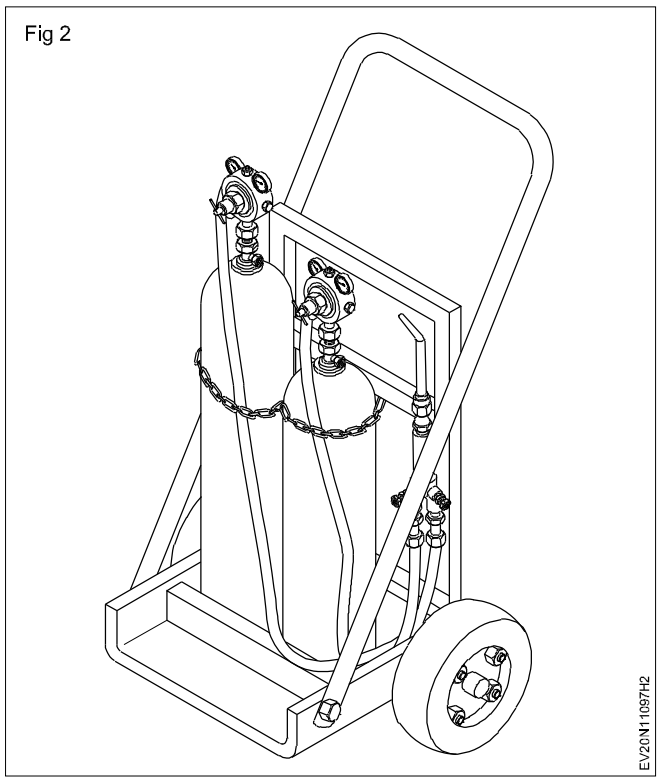

© NIMI NOT TO BE REPUBLISHED

Always keep the cylinders in a trolley and secure them with a chain.

While moving, the gas cylinders should be kept slightly inclined to the vertical position and the protect or cap used to avoid damage to the cylinder valves.(Fig 3)

Do not roll the cylinders horizontally on the ground.

Fig 3

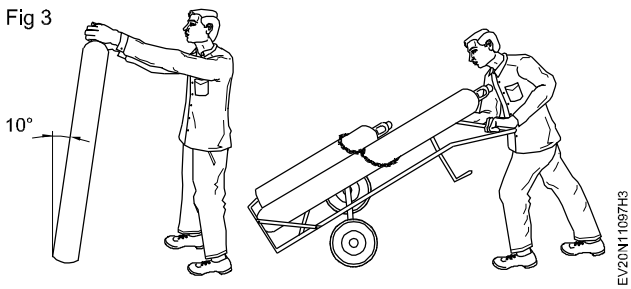

3 Remove the cylinder caps. Crack the gas cylinder valves by quickly opening and closing them using the cylinder key (Fig.4)

Fig 4

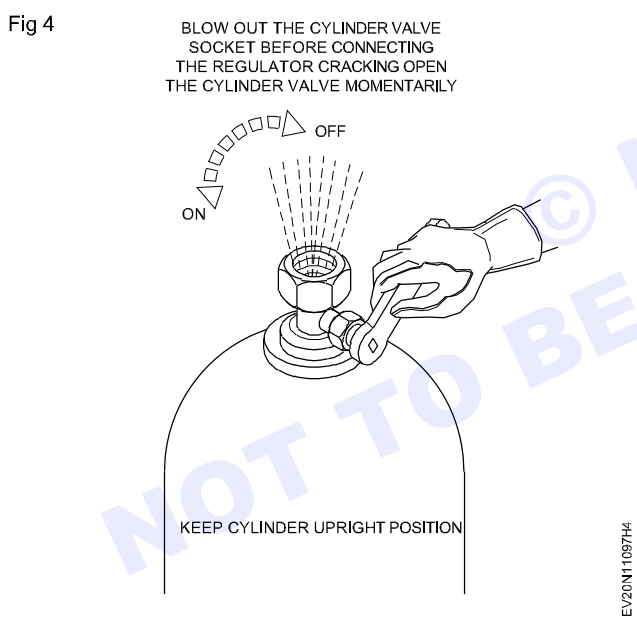

Dirt and dust particles from the cylinder valve sockets are cleaned by cracking the cylinder valve and also to prevent the dust particles from entering into the regulators which may cause damage to the regulators.

Always stand opposite to the valve outlet while cracking the cylinders (Fig.5)

Ensure that your hands are free from grease or oil

- Connect the oxygen regulator to the oxygen gas cylinder (right hand threads)
- Connect the acetylene regulator to the acetylene gas cylinder (left hand threads)

Ensure the pressure adjusting screws of both regulators are in a released condition

Be sure to connect the correct regulator on cylinders. Acetylene connections have left hand thread and oxygen has right thread.

The acetylene regulator connecting nut will have a groove cut on it (Fig.6) and the pressure gauge dial will be of maroon color.

All threaded connections should be fixed initially by tightening by hands and then only a spanner should be used. This will help to avoid assembly with cross thread leading to damage to threads.

Fig 5

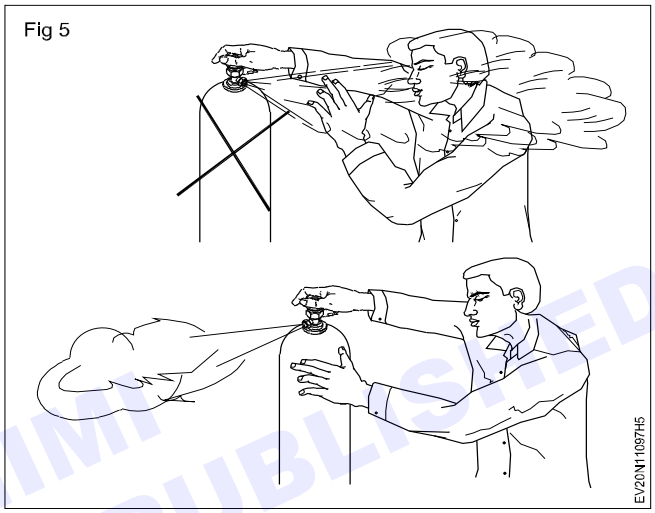

Fig 6

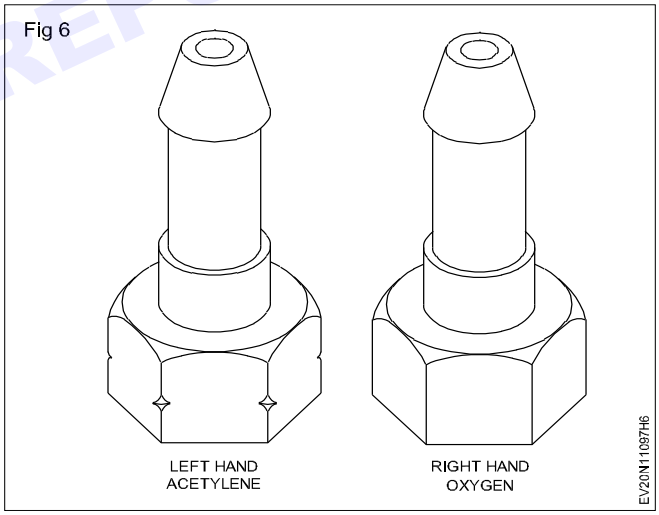

- Always use the correct size spanner to prevent damage to the threads (Fig 7)

The gas mixture from the blow pipe has equal volume of oxygen and acetylene

- To adjust the oxidizing flame, from neutral flame decrease acetylene flow

The white cone will become short and sharp.

The flame will produce a hissing sound and will have a short length(Fig.8)

The gas mixture from the blow pipe has more volume of oxygen than acetylene.

© NIMI NOT TO BE REPUBLISHED

Fig 7

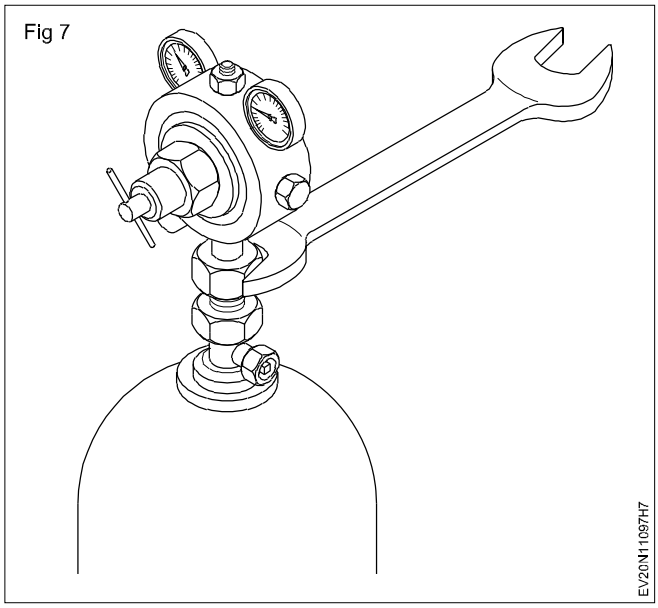

Fig 8

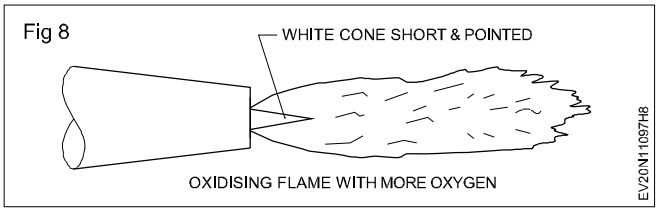

- To adjust the carburising flame, adjust the flame to neutral and then add acetylene.

The white cone will become long surrounded by a feather like portion

The flame will burn quietly having more length(Fig 9)

Fig 9

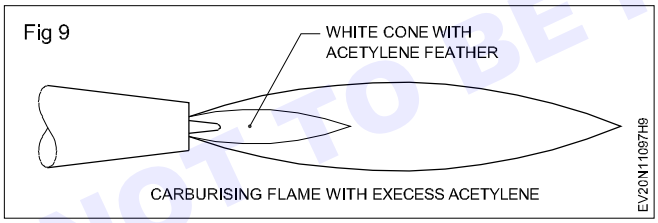

After continuous use of blow pipe during welding the nozzle may get blocked by metal particles or spatters. This blockage has to get continuous fflow of gases by using nozzle cleaner (Fig.10)

Fig 10

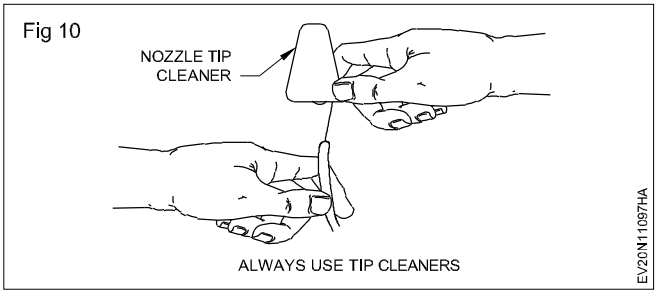

- Repeat the setting of flames till you manage to set the flame with out any backfire or flash back.

Note: The instructor has to demonstrate the proper wire brazing techniques, step by step process

- Select the wire for brazing
- Cut the wire for desired length by wire cutter
- Remove the wire insulation to desired length to be brazing on conductor
- Clean both wire conductor core by using emery sheet
- Connect the wire's conductor together
- Prepare the brazing rod, flux and gas welding plant
- Place the wire conductor on surface metal plate
- Clean and remove the wire conductor surface oxides by wire wool

- Select the gas nozzle and brazing filler rod.
- Apply flux to the filler rod
- Set the oxidizing flame
- Start brazing at the midpoint of wire conductor (Fig 11)
- Manipulate the gas blow pipe and filler rod with flux applied on it by using proper angles to fill the wire conductor.
- Clean and remove the flux residues
- Inspect for exrternal brazing defects.
- Ensure the wire is properly brazing as per required norms.

Note : Use PPE while you are doing brazing work

Fig 11

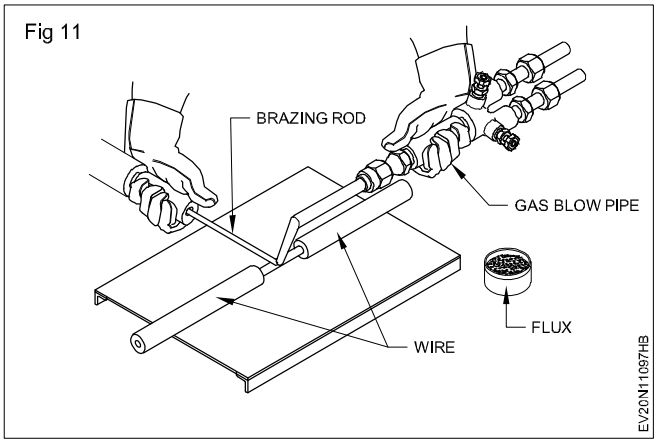

— — — — — —

© NIMI NOT TO BE REPUBLISHED

Practice on soldering wires

Objectives: At the end of this exercise you shall be able to
- **soldering wires by using soldering iron.**

Requirements

Tools / Instruments

- Trainee's tool kit - 1 Set.
- Soldering iron - 1 No.

Equipments / Machineries

Materials

- Cotton waste - as reqd.
- Soap oil - as reqd.
- Tin soldering wire - as reqd.
- Flux - as reqd.

PROCEDURE

TASK 1: **Soldering wire by using soldering iron**

Note: The instructor has to demonstrate on soldering wire by using soldering iron

- Select the wire for soldering
- Select the soldering gun for soldering the wire
- Skinned at both the ends of wire
- Clean the exposed end conductor by using a dry cloth to remove stay particles, moisture grease etc
- If the exposed conductor of the wire is not shiny, scrap the exposed conductors's all around by using a knife to remove oxide layer
- Place the wire in the tinning stand as shown in the Fig 1a.

Fig 1

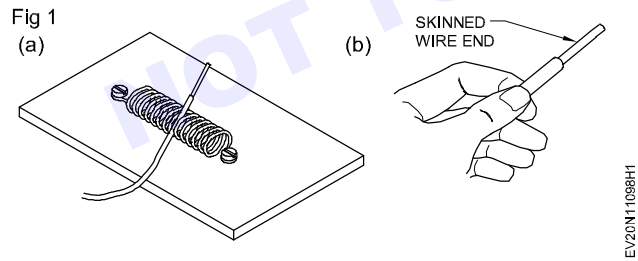

- If tinning stand is not available, carry out tinning by holding wire in the left hand as shown in the Fig1b.
- Apply a thin layer of flux on the exposed conductor for a very small portion to close to the insulation as shown in the Fig 2.
- Hold the face of the heated soldering iron bit on to the bottom of the exposed conductor as in the Fig.3 a and wait for 1 to 2 seconds for exposed conductor to get heated up.

Fig 2

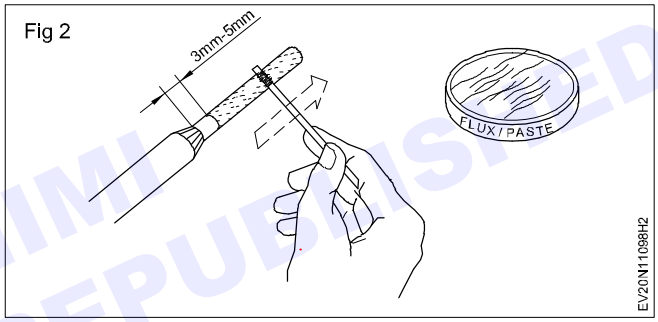

Note : Presence of stray particles on the wire conductor prevents free flow of solder while tinning.

Presence of oxide layer results in poor flow of solder (welding).

- Hold the face of the heated soldering iron bit on to the bottom of the exposed conductor as shown in Fig.3a and wait for 1 to 2 seconds for the exposed conductor to get heated up

Fig 3

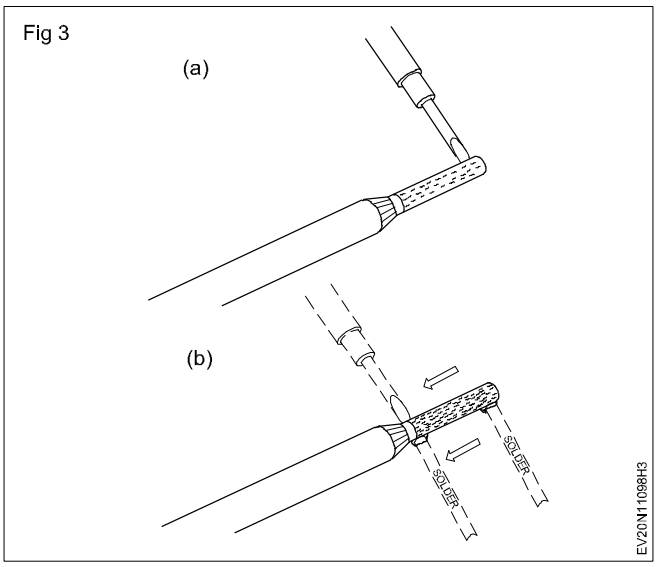

© NIMI NOT TO BE REPUBLISHED

- Touch the tip of the solder wire on the heated exposed conductor. As the solder melts and forms a thin layer over the conductor, move the solder and iron along the conductor as shown in Fig 3b. Pull away the solder wire and bit from the conductor once you come near the insulation.

Do not touch the solder directly to the bit as large quantity of solder melts and forms a lump on the wire and bit

Do not take the iron very close to insulation may get melted

- Check if a thin layer of bright shiny solder (tinned) surface is formed on conductor
- Get the tinned wire ends checked by your instructor
- Take a piece of multi- strand wire, clean, scrap the exposed conductors
- Twist the conductors in direction of existing twist as shown in Fig.4

Fig 4

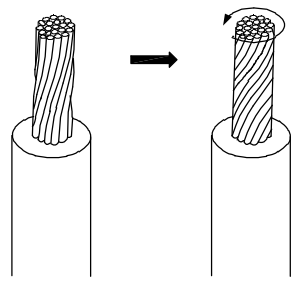

- Carry out above mentioned steps to do tinning of both ends of the wire
- Get the tinned wires checked by your instructor and his remarks entered in O&T sheet
- Get your work checked by your instructor

Trainees should keep the tinned wires in their custody as these wires are reused in further exercises.

— — — — — —

© NIMI
NOT TO BE REPUBLISHED

Practice on check and identify the power and signal connectors

Objectives: At the end of this exercise you shall be able to
- **check the power and signal connectors**
- **check the continuity of power and signal connectors.**

Requirements

Tools / Instruments

- Trainee's tool kit - 1 Set.
- Multi meter - 1 No.
- OBD Scanner - 1 No.

Equipments / Machineries

- Electric vehicle - 1 No.

Materials

- Cotton waste - as reqd.
- Soap oil - as reqd.
- Insulation tape - as reqd.
- Wireing harness - as reqd.

PROCEDURE

TASK 1: **Check and identify the electric vehicles power and signal connectors for their continuity**

Note: The instructor has to demonstrate to identify the power and signal connectors and testing process of circuit continuity

- Select any one type of electric vehicle for check the wire connector's continuity
- Study the vehicle manual for achieve knowledge about electric vehicles wiring harness- Trace on the electrical wiring circuit of electric vehicle with help of manual diagram and instruction guidelines

Fig 1

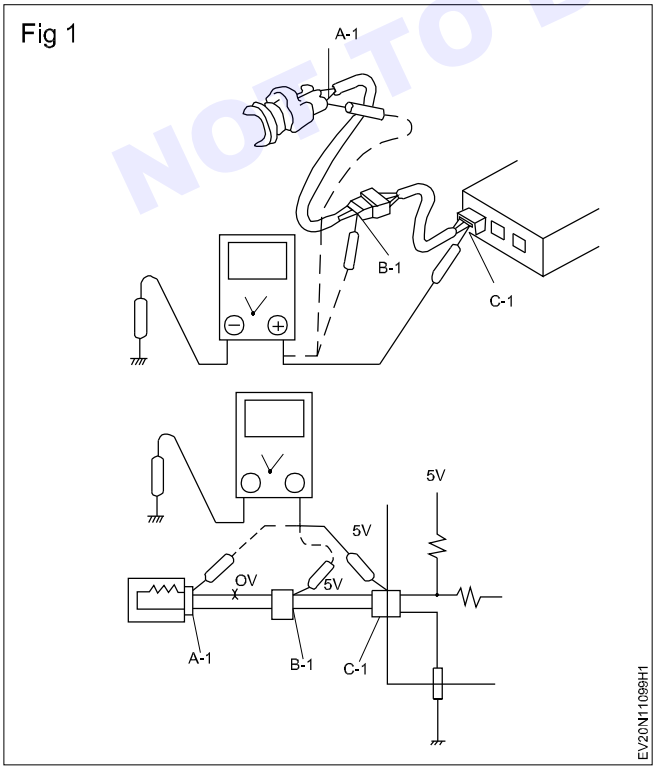

- Use the multi meter to check the wire connector's continuity and power pass through the circuit wire
- To measure the power see the Fig.1
- To check the continuity test and see the Fig.2,3

Fig 2

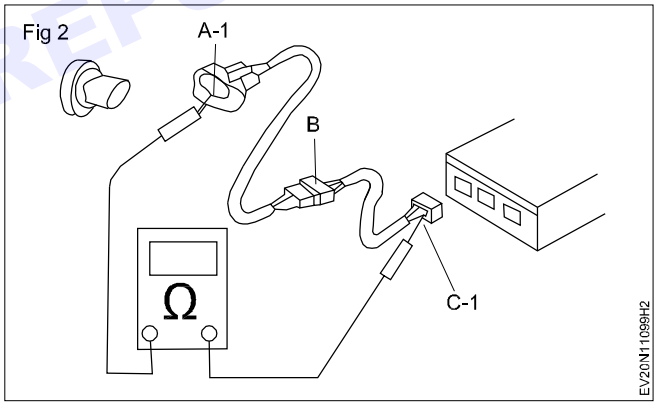

Fig 3

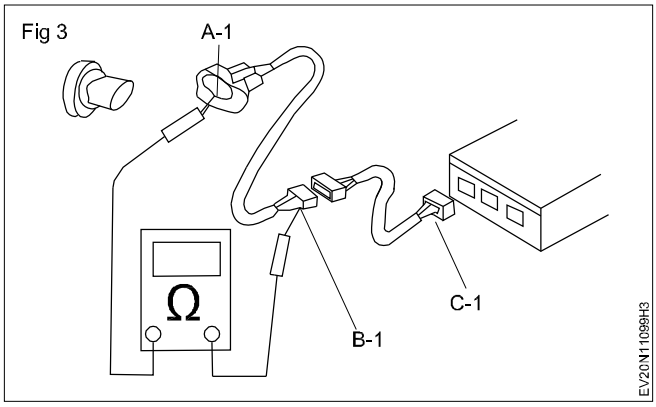

© NIMI NOT TO BE REPUBLISHED

- To measure the circuits cable connector resistance see the (Fig 4)

Fig 4

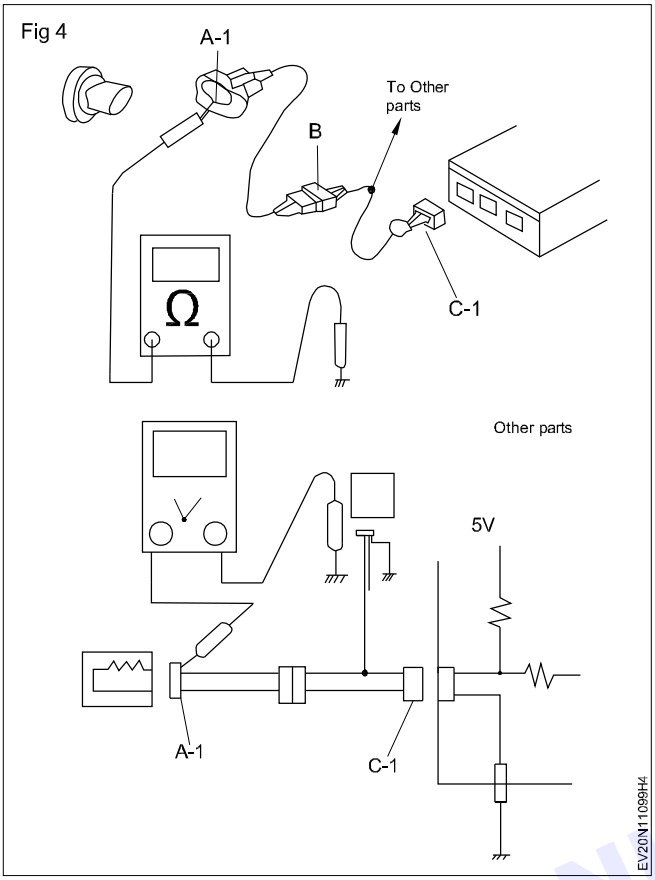

- To check the poor wire connector connection see the (Fig 5,6,7)
- To measure the circuit cable connector connection see the Fig.5,6

Fig 5

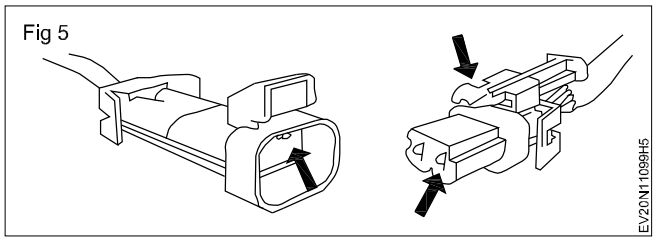

Fig 6

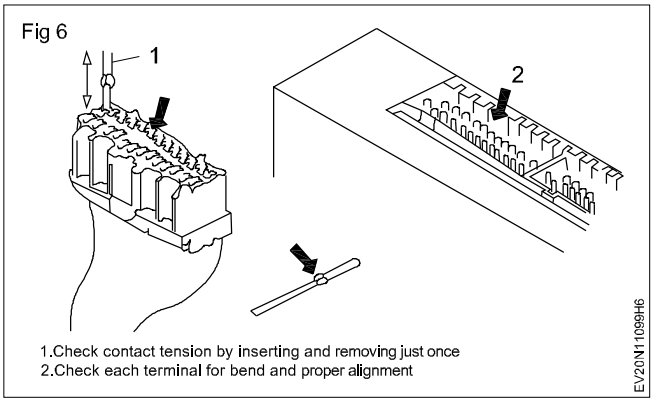

Fig 7

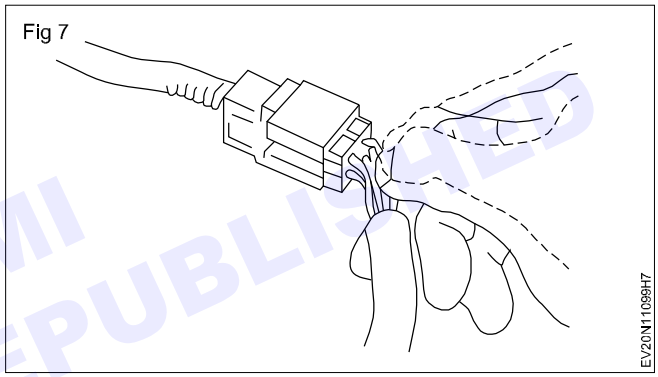

- Write down the finding result during your practical performance in Table 1.

Table 1

S. No.	Electrical circuit	Wire connector's continuity	Power rating Volt/Ampere	Remarks
1	Traction motor wire connection			
2	Brake electrical circuit			
3	Head light circuit			
4	HVAC Electrical circuit			
5	Power window Electrical circuit			
6	Horn circuit			
7	Distance sensor circuit			
8	Rear view camera circuit			
9	Indicator circuit			
10	Hazard light circuit			
11	Fog light circuit			
12	Wiper circuit			

© NIMI NOT TO BE REPUBLISHED