18/B/C/S-2/2/ED

M

ED - 8TH PASS (One Year)
007/206, 009/214, 014/211,
018/202, 023/209, 026/213,
029/212, 268, 269, 270, 271 & 272

PAPER - III
(ENGINEERING DRAWING)
8TH PASS (ONE YEAR TRADES)
EVENING SESSION
SEMESTER - II

CARPENTER, FOUNDRYMAN/ FOUNDRYMAN TECHNICIAN, MASON (BUILDING CONSTRUCTOR), MECHANIC TRACTOR, PLUMBER, SHEET METAL WORKER, WELDER , WELDER (GWAW & GTAW), WELDER PIPE, WELDER STRUCTURAL, WELDER (WELDING & INSPECTION), WELDER (FABRICATION & FITTING)

TIME: 4 HRS. **MARKS: 75**

Note: Attempt all questions.

1. **Draw the following (Any Four):** (30)
   a) Example of chain dimensioning
   b) Free hand sketch of hook bolt
   c) Free hand sketch of adjustable frame hack saw
   d) Free hand sketch of a pyramid.
   e) Symbols first angle and third angle projections

2. Draw the following orthographic views in third angle projection:
   a) Elevation (15)
   b) Side view (15)
   c) Top view (15)

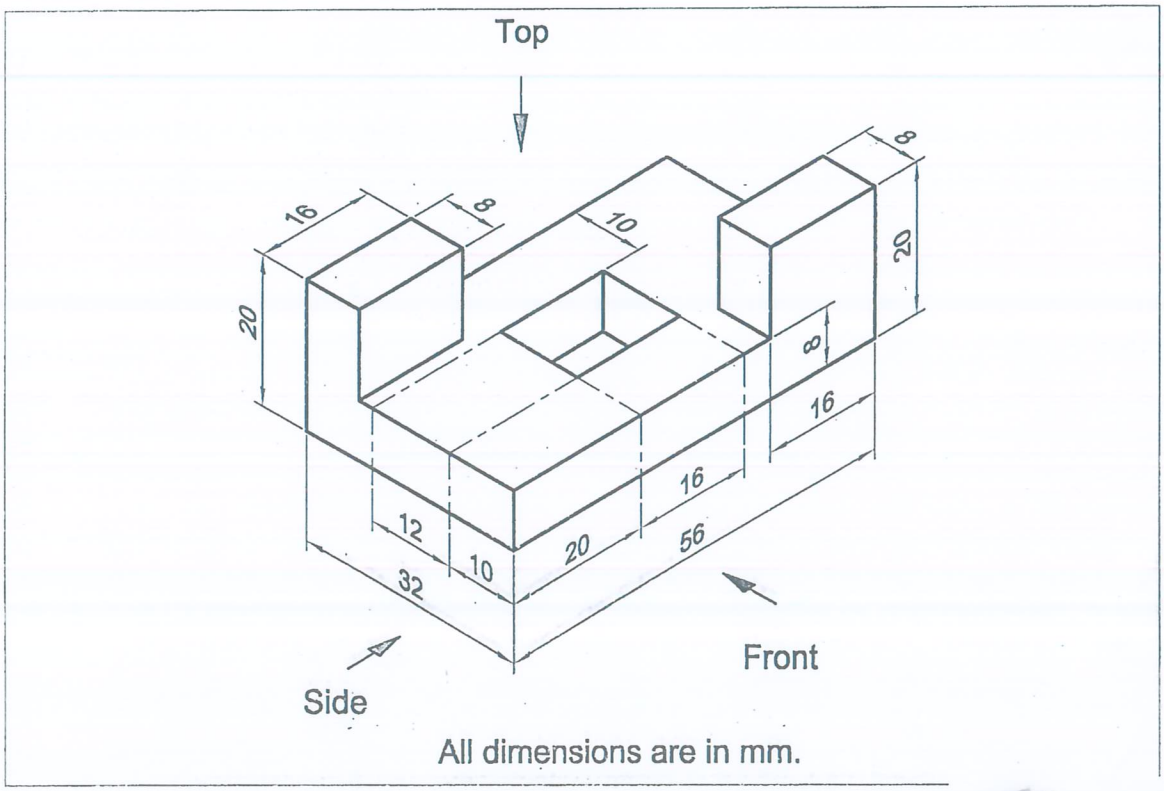

created with nitroPDF professior
download the free trial online at nitropdf.com/profes